MIAMI-DADE COUNTY
DEPARTMENT OF REGULATORY AND ECONOMIC RESOURCES (RER)
BOARD AND CODE ADMINISTRATION DIVISION

MIAMI-DADE COUNTY
PRODUCT CONTROL SECTION
11805 SW 26 Street, Room 208
T (786) 315-2590 F (786) 315-2599
www.miamidade.gov/economy

NOTICE OF ACCEPTANCE (NOA)

PGT Industries, Inc.
1070 Technology Drive
North Venice, FL 34275

SCOPE:

This NOA is being issued under the applicable rules and regulations governing the use of construction materials. The documentation submitted has been reviewed and accepted by Miami-Dade County RER - Product Control Section to be used in Miami Dade County and other areas where allowed by the Authority Having Jurisdiction (AHJ).

This NOA shall not be valid after the expiration date stated below. The Miami–Dade County Product Control Section (In Miami–Dade County) and/or the AHJ (in areas other than Miami–Dade County) reserve the right to have this product or material tested for quality assurance purposes. If this product or material fails to perform in the accepted manner, the manufacturer will incur the expense of such testing and the AHJ may immediately revoke, modify, or suspend the use of such product or material within their jurisdiction. RER reserves the right to revoke this acceptance, if it is determined by Miami–Dade County Product Control Section that this product or material fails to meet the requirements of the applicable building code.

This product is approved as described herein, and has been designed to comply with the Florida Building Code, including the High Velocity Hurricane Zone.-

DESCRIPTION: Series "HR-710" Aluminum Horizontal Rolling Window – L.M.I.

APPROVAL DOCUMENT: Drawing No. **4127-10,** titled "Alum. Horizontal Roller Window, Impact", sheets 1 through 11 of 11, dated 02/28/06, with revision H dated 03/24/17, prepared by manufacturer, signed and sealed by Anthony Lynn Miller, P.E., bearing the Miami-Dade County Product Control Revision stamp with the Notice of Acceptance number and expiration date by the Miami-Dade County Product Control Section.

MISSILE IMPACT RATING: Large and Small Missile Impact Resistant.

LABELING: Each unit shall bear a permanent label with the manufacturer's name or logo, city, state, model/series, and following statement: "Miami-Dade County Product Control Approved", unless otherwise noted herein.

RENEWAL of this NOA shall be considered after a renewal application has been filed and there has been no change in the applicable building code negatively affecting the performance of this product.

TERMINATION of this NOA will occur after the expiration date or if there has been a revision or change in the materials, use, and/or manufacture of the product or process. Misuse of this NOA as an endorsement of any product, for sales, advertising or any other purposes shall automatically terminate this NOA. Failure to comply with any section of this NOA shall be cause for termination and removal of NOA.

ADVERTISEMENT: The NOA number preceded by the words Miami-Dade County, Florida, and followed by the expiration date may be displayed in advertising literature. If any portion of the NOA is displayed, then it shall be done in its entirety.

INSPECTION: A copy of this entire NOA shall be provided to the user by the manufacturer or its distributors and shall be available for inspection at the job site at the request of the Building Official.

This NOA **revises NOA# 16-0714.13** and consists of this page 1 and evidence pages E-1, E-2 and E-3, as well as approval document mentioned above.

The submitted documentation was reviewed by **Jorge M. Plasencia, P.E.**

MIAMI-DADE COUNTY APPROVED

8/23/2017

PGT Industries, Inc.

NOTICE OF ACCEPTANCE: EVIDENCE SUBMITTED

A. DRAWINGS

1. Manufacturer's die drawings and sections.
   (Submitted under NOA's No. 07-0815.09 and 06-0405.06)
2. Drawing No. **4127-10,** titled "Alum. Horizontal Roller Window, Impact", sheets 1 through 11 of 11, dated 02/28/06, with revision H dated 03/24/17, prepared by manufacturer, signed and sealed by Anthony Lynn Miller, P.E.

B. TESTS

1. Test reports on: 1) Uniform Static Air Pressure Test, Loading per FBC, TAS 202-94
   2) Large Missile Impact Test per FBC, TAS 201-94
   3) Cyclic Wind Pressure Loading per FBC, TAS 203-94

   along with marked-up drawings and installation diagram of a PVC sliding glass door, a PVC fixed window and an aluminum sliding glass door, using: Kodispace 4SG TPS spacer system, Duraseal® spacer system, Super Spacer® NXT™ spacer system and XL Edge™ spacer system at insulated glass, prepared by Fenestration Testing Laboratory, Inc., Test Reports No. **FTL-8717, FTL-8968** and **FTL-8970**, dated 11/16/15, 06/07/16 and 06/02/16 respectively, all signed and sealed by Idalmis Ortega, P.E.
   (Submitted under previous NOA No. 16-0714.13)
2. Test reports on: 1) Large Missile Impact Test per FBC, TAS 201-94
   2) Cyclic Wind Pressure Loading per FBC, TAS 203-94

   along with marked-up drawings and installation diagram of an XOX aluminum horizontal sliding window, prepared by Fenestration Testing Laboratory, Inc., Test Report No. **FTL-5330**, dated 07/18/07, signed and sealed by Carlos S. Rionda, P.E.
   (Submitted under NOA No. 07-0815.09)
3. Test reports on: 1) Air Infiltration Test, per FBC, TAS 202-94
   2) Uniform Static Air Pressure Test, Loading per FBC TAS 202-94
   3) Water Resistance Test, per FBC, TAS 202-94
   ..4) Large Missile Impact Test per FBC, TAS 201-94
   5) Cyclic Wind Pressure Loading per FBC, TAS 203-94
   6) Forced Entry Test, per FBC 2411.3.2.1, TAS 202-94

   along with marked-up drawings and installation diagram of an XOX aluminum horizontal sliding window, prepared by Fenestration Testing Laboratory, Inc., Test Report No. **FTL-4858**, dated 03/08/06, signed and sealed by Edmundo Largaespada, P.E.
   (Submitted under NOA No.06-0405.06)

Jorge M. Plasencia, P.E.
Product Control Unit Supervisor
NOA No. 17-0411.06
Expiration Date: December 21, 2021
Approval Date: August 31, 2017

NOTICE OF ACCEPTANCE: EVIDENCE SUBMITTED

B. TESTS (CONTINUED)

4. Test reports on: 1) Air Infiltration Test, per FBC, TAS 202-94
2) Uniform Static Air Pressure Test, Loading per FBC TAS 202-94
3) Water Resistance Test, per FBC, TAS 202-94
4) Large Missile Impact Test per FBC, TAS 201-94
5) Cyclic Wind Pressure Loading per FBC, TAS 203-94
6) Forced Entry Test, per FBC 2411.3.2.1, TAS 202-94

along with marked-up drawings and installation diagram of an XOX aluminum horizontal sliding window, prepared by Fenestration Testing Laboratory, Inc., Test Report No. **FTL-4859**, dated 03/08/06, signed and sealed by Edmundo Largaespada, P.E.
(Submitted under NOA No. 06-0405.06)

C. CALCULATIONS

1. Anchor verification calculations and structural analysis, complying with **FBC-5th Edition (2014)** and **FBC-6th Edition (2017)**, dated 03/31/17 and revised on 07/28/17, prepared by manufacturer, signed and sealed by Anthony Lynn Miller, P.E.

2. Glazing complies with **ASTM E1300-09**

D. QUALITY ASSURANCE

1. Miami-Dade Department of Regulatory and Economic Resources (RER).

E. MATERIAL CERTIFICATIONS

1. No. **16-1117.01** issued to **Kuraray America, Inc.** for their **"Trosifol® Ultraclear, Clear, and Color PVB Glass Interlayers"** dated 01/19/17, expiring on 07/08/19.

F. STATEMENTS

1. Statement letter of conformance, complying with **FBC-5th Edition (2014)** and **FBC-6th Edition (2017)**, dated 07/28/17, issued by manufacturer, signed and sealed by A. Lynn Miller, P.E.

2. Statement letter of no financial interest, dated 03/31/17, issued by manufacturer, signed and sealed by A. Lynn Miller, P.E.

3. Proposal No. **16-1372B** issued by the Product Control Section, dated 11/09/16, signed by Manuel Perez, P.E.

4. Proposal No. **16-0125** issued by the Product Control Section, dated 03/09/16, signed by Ishaq Chanda, P.E.
(Submitted under previous NOA No. 16-0714.13)

Jorge M. Plasencia, P.E.
Product Control Unit Supervisor
NOA No. 17-0411.06
Expiration Date: December 21, 2021
Approval Date: August 31, 2017

NOTICE OF ACCEPTANCE: EVIDENCE SUBMITTED

F. STATEMENTS (CONTINUED)

5. Laboratory compliance letter for Test Report No. **FTL-5330**, issued by Fenestration Testing Laboratory, Inc., dated 07/18/07, signed and sealed by Carlos S. Rionda, P.E.
   (Submitted under NOA No. 07-0815.09)
6. Laboratory compliance letter for Test Reports No. **FTL-4858 and FTL-4859**, issued by Fenestration Testing Laboratory, Inc., dated 03/08/06, signed and sealed by Edmundo Largaespada, P.E.
   (Submitted under NOA No. 06-0405.06)

G. OTHERS

1. Notice of Acceptance No. **16-0714.13**, issued to PGT Industries for their Series "HR-710" Aluminum Horizontal Rolling Window – L.M.I., approved on 09/01/16 and expiring on 12/21/21.

Jorge M. Plasencia, P.E.
Product Control Unit Supervisor
NOA No. 17-0411.06
Expiration Date: December 21, 2021
Approval Date: August 31, 2017

GENERAL NOTES: SERIES HR-710 IMPACT HORIZONTAL ROLLER FLANGED AND INTEGRAL FIN WINDOW

IMPACT RATING	DESIGN PRESSURE RATING
LARGE & SMALL MISSILE IMPACT RESISTANT	VARIES PER OPTIONS, SEE SHEET 8

1. GLAZING OPTIONS: (SEE DETAILS ON SHEET 2).
   A. 5/16" LAMI CONSISTING OF (2) LITES OF 1/8" ANNEALED GLASS WITH A .090" PVB INTERLAYER.
   B. 5/16" LAMI CONSISTING OF (1) LITE OF 1/8" ANNEALED GLASS AND (1) LITE OF 1/8" HEAT STRENGTHENED GLASS WITH A .090" PVB INTERLAYER.
   C. 5/16" LAMI CONSISTING OF (2) LITES OF 1/8" HEAT STRENGTHENED GLASS WITH A .090" PVB INTERLAYER.
   D. 7/16" LAMI CONSISTING OF (2) LITES OF 3/16" ANNEALED GLASS WITH A .090" PVB INTERLAYER.
   E. 7/16" LAMI CONSISTING OF (1) LITE OF 3/16" ANNEALED GLASS AND (1) LITE OF 3/16" HEAT STRENGTHENED GLASS WITH A .090" PVB INTERLAYER.
   F. 7/16" LAMI CONSISTING OF (2) LITES OF 3/16" HEAT STRENGTHENED GLASS WITH A .090" PVB INTERLAYER.
   G. 13/16" LAMI IG: (1) LITE OF 1/8" OR 3/16" ANNEALED (MIN.) GLASS, 5/16" OR 3/8" AIR SPACE AND 5/16" LAMI CONSISTING OF (2) LITES OF 1/8" ANNEALED GLASS WITH A .090" PVB INTERLAYER.
   H. 13/16" LAMI IG: (1) LITE OF 1/8" OR 3/16" ANNEALED (MIN.) GLASS, 5/16" OR 3/8" AIR SPACE AND 5/16" LAMI CONSISTING OF (1) LITE OF 1/8" ANNEALED GLASS AND (1) LITE OF 1/8" HEAT STRENGTHENED GLASS WITH A .090" PVB INTERLAYER.
   I. 13/16" LAMI IG: (1) LITE OF 1/8" OR 3/16" ANNEALED (MIN.) GLASS, 5/16" OR 3/8" AIR SPACE AND 5/16" LAMI CONSISTING OF (2) LITES OF 1/8" HEAT STRENGTHENED GLASS WITH A .090" PVB INTERLAYER.
   J. 13/16" LAMI IG: (1) LITE OF 1/8" OR 3/16" ANNEALED (MIN.) GLASS, 3/16" OR 1/4" AIR SPACE AND 7/16" LAMI CONSISTING OF (2) LITES OF 3/16" ANNEALED GLASS WITH A .090" PVB INTERLAYER.
   K. 13/16" LAMI IG: (1) LITE OF 1/8" OR 3/16" ANNEALED (MIN.) GLASS, 3/16" OR 1/4" AIR SPACE AND 716" LAMI CONSISTING OF (1) LITE OF 3/16" ANNEALED GLASS AND (1) LITE OF 3/16" HEAT STRENGTHENED GLASS WITH A .090" PVB INTERLAYER.
   L. 13/16" LAMI IG: (1) LITE OF 1/8" OR 3/16" ANNEALED (MIN.) GLASS, 3/16" OR 1/4" AIR SPACE AND 7/16" LAMI CONSISTING OF (2) LITES OF 3/16" HEAT STRENGTHENED GLASS WITH A .090" PVB INTERLAYER.
2. CONFIGURATIONS: OX, XO, XOX
3. DESIGN PRESSURES: (SEE TABLES, SHEET 8)
   A. NEGATIVE DESIGN LOADS BASED ON TESTED PRESSURE AND GLASS TABLES ASTM E 1300.
   B. POSITIVE DESIGN LOADS BASED ON WATER TEST PRESSURE AND GLASS TABLES ASTM E 1300.
   C. DESIGN LOADS ARE BASED ON ALLOWABLE STRESS DESIGN, ASD.
4. ANCHORAGE: THE 33 1/3% STRESS INCREASE HAS NOT BEEN USED IN THE DESIGN OF THIS PRODUCT. SEE SHEETS 9 THROUGH 11 FOR ANCHORAGE DETAILS.
5. SHUTTERS ARE NOT REQUIRED.
6. FRAME AND PANEL CORNERS SEALED WITH NARROW JOINT SEALANT OR GASKET.
7. REFERENCES: TEST REPORTS FTL-4858, FTL-4859 AND FTL-5330.
   ELCO ULTRACON NOA'S
   ANSI/AF&PA NDS FOR WOOD CONSTRUCTION
   ALUMINUM DESIGN MANUAL
8. THIS PRODUCT HAS BEEN DESIGNED & TESTED TO COMPLY WITH THE REQUIREMENTS OF THE FLORIDA BUILDING CODE, INCLUDING THE HIGH VELOCITY HURRICANE ZONE (HVHZ).
9. FOR INSTALLATION IN THE HVHZ ABOVE 30 FT, GLASS TYPES G - L SHALL HAVE A TEMPERED I.G. GLASS CAP. BOTH THE DP AND ANCHOR QUANTITY REMAIN UNCHANGED.

TABLE 1:

Anchor Group	Anchor Type	Frame Member	Substrate	Min. Edge Distance	Min. O.C. Distance	Min. Embedment or Metal Thickness
A	#12, Steel SMS (Gr. 5), (min. of 3 threads beyond metal substrate)	All	Southern Pine (SG = 0.55)	9/16"	7/8"	1-3/8"
			6063-T5 Aluminum	3/8"	9/16"	1/8"
			A36 Steel or Gr. 33 Steel Stud	3/8"	9/16"	0.045" (18 Ga)
B	1/4" Elco UltraCon®	Jamb	Hollow Block (ASTM C90)	1-3/4"	6"	1-1/4"
		All	Concrete (min. 2.85 ksi)	1"	4"	1-3/4"
		All	Southern Pine (SG = 0.55)	1"	1"	1-3/8"
	1/4" 410 SS Elco CreteFlex ®	All	Southern Pine (SG = 0.55)	1"	1"	1-3/8"
C	1/4" 410 SS Elco CreteFlex ®	Jamb	Hollow Block, (ASTM C90)	2-1/2"	6"	1-1/4"
		All	Concrete (min. 3.35 ksi)	2-1/2"	4"	1-3/4"

1) WHERE SUBSTRATE CONDITIONS REQUIRE ANCHORAGE FROM MORE THAN ONE OF THE ANCHOR GROUPS ABOVE, CHOOSE THE ANCHOR GROUP OF THE LOWEST LETTER FOR ALL SUBSEQUENT TABLES IN THIS APPROVAL.

2) FLATHEAD ANCHORS MUST BE #12 TRIMFIT HEAD.

TABLE 2:

Material	Min. F_y	Min. F_u
Steel Screw	92 ksi	120 ksi
Elco UltraCon ®	155 ksi	177 ksi
410 SS Elco CreteFlex ®	127.4 ksi	189.7 ksi
6063-T5 Aluminum	16 ksi	22 ksi
6063-T6 Aluminum	25 ksi	30 ksi
A36 Steel	36 ksi	58 ksi
Gr. 33 Steel Stud	33 ksi	45 ksi

CODES / STANDARDS USED:

- 2017 FLORIDA BUILDING CODE (FBC), 6TH EDITION
- 2014 FLORIDA BUILDING CODE (FBC), 5TH EDITION
- ASTM E1300-09
- ANSI/AF&PA NDS-2015 FOR WOOD CONSTRUCTION
- ALUMINUM DESIGN MANUAL, ADM-2015
- AISI S100-12
- AISC 360-10

NOA DRAWING MAP

	SHEET
GENERAL NOTES	1
GLAZING DETAILS	2
ELEVATIONS	3
VERT. SECTIONS	4
HORIZ. SECTIONS	4
CORNER DETAIL	4
PARTS LIST	5
EXTRUSIONS	6
INSTALLATION	7
DESIGN PRESSURES	8
ANCHOR QUANTITY	9-11

PRODUCT REVISED
as complying with the Florida Building Code
NOA-No. 17-0411.06
Expiration Date 12/21/2021
By
Miami-Dade Product Control

Revision: 3/24/17: NEW LAYOUT, SHEET REORGANIZATION, UPDATED ANCHOR QUANTITY PER FBC 2017, CHANGED ANCHOR TYPES

1070 TECHNOLOGY DRIVE
N. VENICE, FL 34275
(941) 480-1600

COPYRIGHT © 2017 PGT INDUSTRIES, INC. ALL RIGHTS RESERVED

CERT. OF AUTH. #29296

Series	Desc.	Title	Scale	Sheet	DWG No.	Drawn By	Date	Rev.
HR-710	GENERAL NOTES	ALUM. HORIZONTAL ROLLER, IMPACT	NTS	1 OF 11	4127-10	JENS ROSOWSKI	03/22/06	H

ANTHONY LYNN MILLER
LICENSE
No. 58705
8/23/17
STATE OF FLORIDA
PROFESSIONAL ENGINEER

A. LYNN MILLER, P.E.
P.E.# 58705

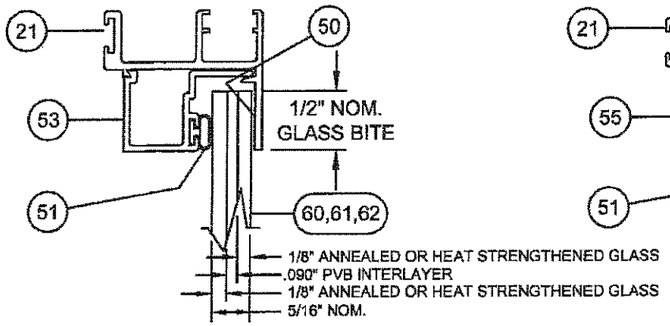

5/16" LAMINATED GLASS

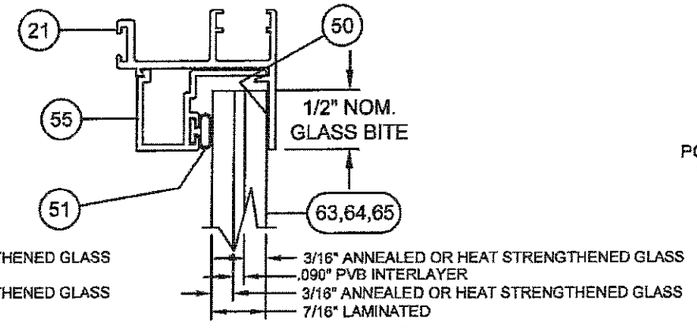

7/16" LAMINATED GLASS

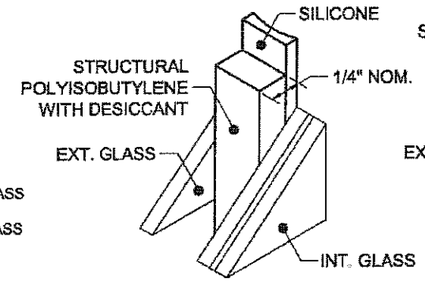

(85) KODISPACE 4SG TPS

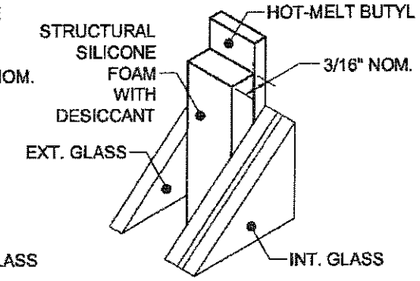

(86) SUPER SPACER® NXT™

EXTERIOR INTERIOR
(ALL SECTIONS)

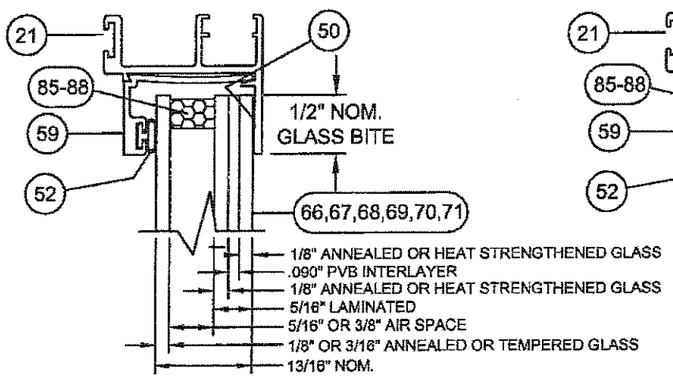

13/16" LAMI IG GLASS W/ 5/16" LAMI

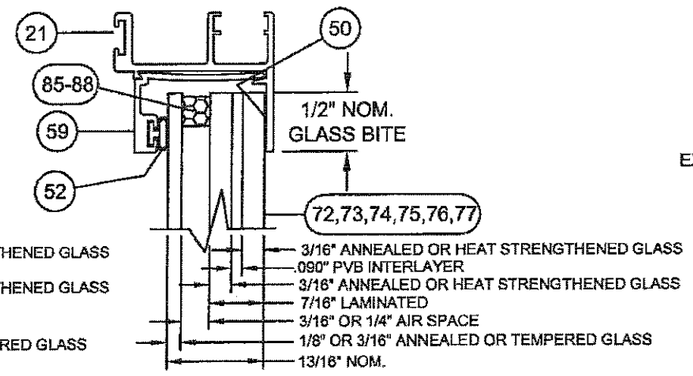

13/16" LAMI IG GLASS W/ 7/16" LAMI

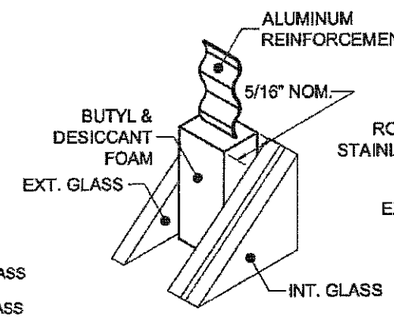

(87) DURASEAL® SPACER

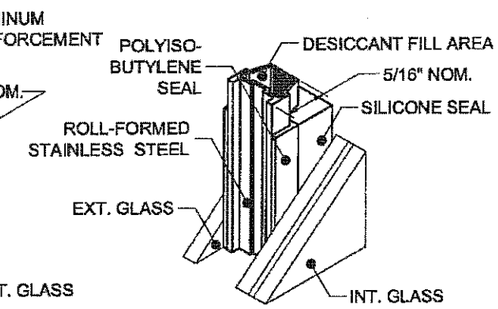

(88) XL EDGE™ SPACER

TABLE 3:

Part #	Description	Material
85	Kommerling 4SG TPS Spacer System	See this Sheet for Materials
86	Quanex Super Spacer nXT with Hot Melt Butyl	
87	Quanex Duraseal Spacer	
88	Cardinal XL Edge Spacer	

REFERENCE TEST REPORTS: FTL-8717, 8968 & 8970

GLASS TYPES:

A. 5/16" LAMI - (1/8" A,.090" PVB, 1/8" A)
B. 5/16" LAMI - (1/8" A,.090" PVB, 1/8" HS)
C. 5/16" LAMI - (1/8" HS,.090" PVB, 1/8" HS)
D. 7/16" LAMI - (3/16" A,.090" PVB, 3/16" A)
E. 7/16" LAMI - (3/16" A,.090" PVB, 3/16" HS)
F. 7/16" LAMI - (3/16" HS,.090" PVB, 3/16" HS)
G. 13/16" LAMI IG - 1/8" OR 3/16" A (MIN.), 5/16" OR 3/8" SPACE, 5/16" LAMI - (1/8" A,.090" PVB, 1/8" A)
H. 13/16" LAMI IG - 1/8" OR 3/16" A (MIN.), 5/16" OR 3/8" SPACE, 5/16" LAMI - (1/8" A,.090" PVB, 1/8" HS)
I. 13/16" LAMI IG - 1/8" OR 3/16" A (MIN.), 5/16" OR 3/8" SPACE, 5/16" LAMI - (1/8" HS,.090" PVB, 1/8" HS)
J. 13/16" LAMI IG - 1/8" OR 3/16" A (MIN.), 3/16" OR 1/4" SPACE, 7/16" LAMI - (3/16" A,.090" PVB, 3/16" A)
K. 13/16" LAMI IG - 1/8" OR 3/16" A (MIN.), 3/16" OR 1/4" SPACE, 7/16" LAMI - (3/16" A,.090", 3/16" HS)
L. 13/16" LAMI IG - 1/8" OR 3/16" A (MIN.), 3/16" OR 1/4" SPACE, 7/16" LAMI - (3/16" HS,.090", 3/16" HS)

FOR INSTALLATION IN THE HVHZ ABOVE 30 FT, GLASS TYPES G - L SHALL HAVE A TEMPERED I.G. GLASS CAP. BOTH THE DP AND ANCHOR QUANTITY REMAIN UNCHANGED.

"PVB" = KURARAY TROSIFOL® PVB INTERLAYER

PRODUCT REVISED
as complying with the Florida Building Code
NOA-No. 17-0411.06
Expiration Date 12/21/2021
By
Miami-Dade Product Control

Revision	
	3/24/17: NEW SHEET

1070 TECHNOLOGY DRIVE
N. VENICE, FL 34275
(941) 480-1600

COPYRIGHT © 2017 PGT INDUSTRIES, INC.
ALL RIGHTS RESERVED

PGT®
CERT. OF AUTH. #29296

Title	ALUM. HORIZONTAL ROLLER, IMPACT	Date	03/22/06
Drawn By	JENS ROSOWSKI	Rev.	H
Series	HR-710	Scale	NTS
Sheet	GLAZING DETAILS	DWG No.	4127-10
			2 OF 11

ANTHONY LYNN MILLER
LICENSE
No. 58705
8/23/17
STATE OF FLORIDA
PROFESSIONAL ENGINEER

A. LYNN MILLER, P.E.
P.E.# 58705

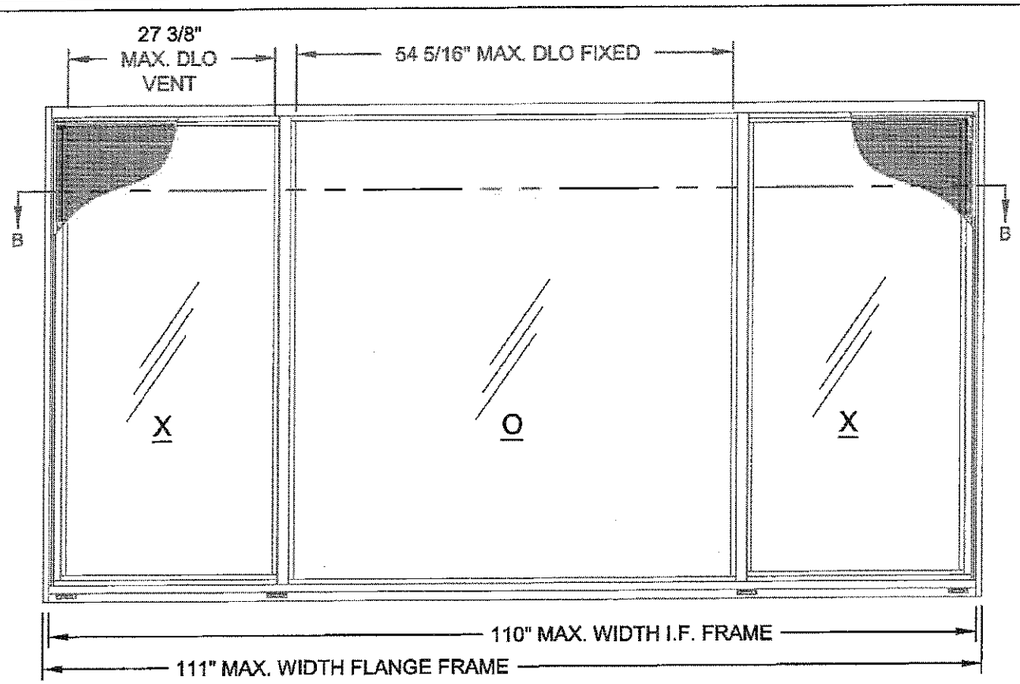

DETAIL B - XOX (1/4-1/2-1/4)

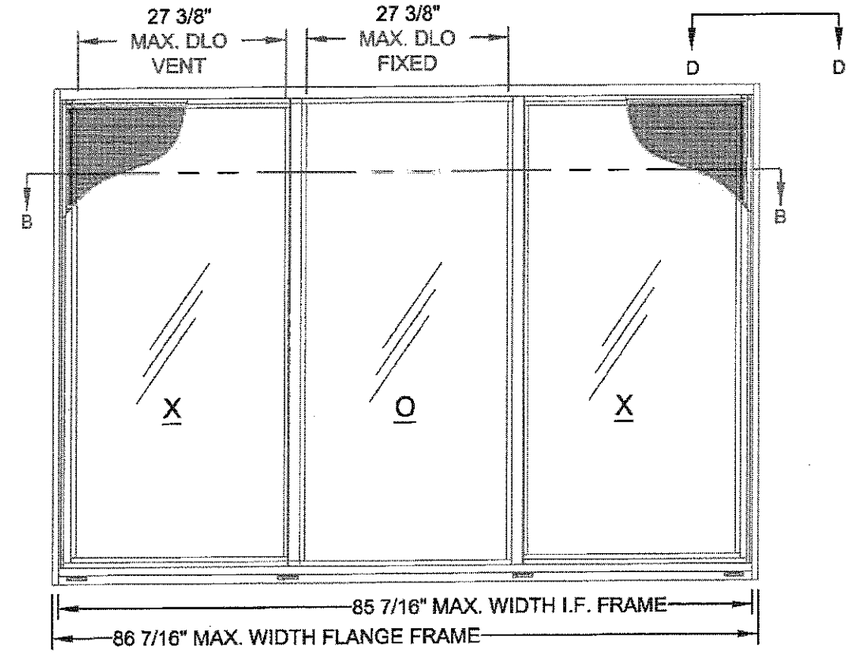

DETAIL C - XOX (1/3-1/3-1/3)

NOTE:

1. SEE SHEET 4 FOR VERTICAL AND HORIZONTAL SECTION DETAILS.

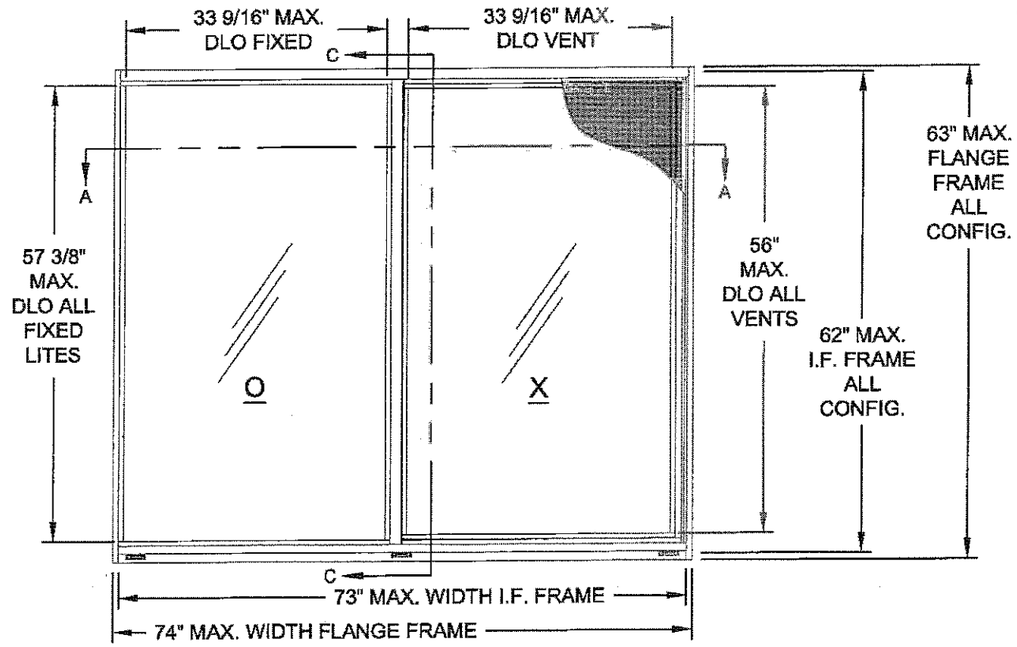

DETAIL A - OX OR XO

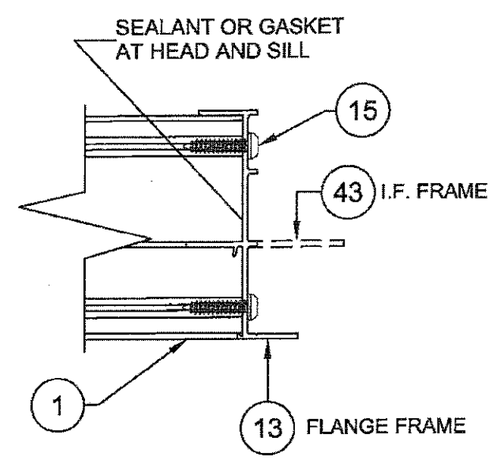

VIEW D-D
(FRAME CORNER CONSTRUCTION)

PRODUCT REVISED
as complying with the Florida Building Code
NOA-No. 17-0411.06
Expiration Date 12/21/2021
By
Miami-Dade Product Control

Revision	
	3/24/17: NO CHANGES THIS SHEET.

1070 TECHNOLOGY DRIVE
N. VENICE, FL 34275
(941) 480-1600

COPYRIGHT © 2017 PGT INDUSTRIES, INC.
ALL RIGHTS RESERVED

CERT. OF AUTH. #29296

Title	ALUM. HORIZONTAL ROLLER, IMPACT
Date	03/22/06
Drawn By	JENS ROSOWSKI
Desc.	ELEVATIONS
DWG No.	4127-10
Rev.	H
Series	HR-710
Scale	NTS
Sheet	3 OF 11

ANTHONY LYNN MILLER
LICENSE
No. 58705
8/23/17
STATE OF FLORIDA
PROFESSIONAL ENGINEER

A. LYNN MILLER, P.E.
P.E.# 58705

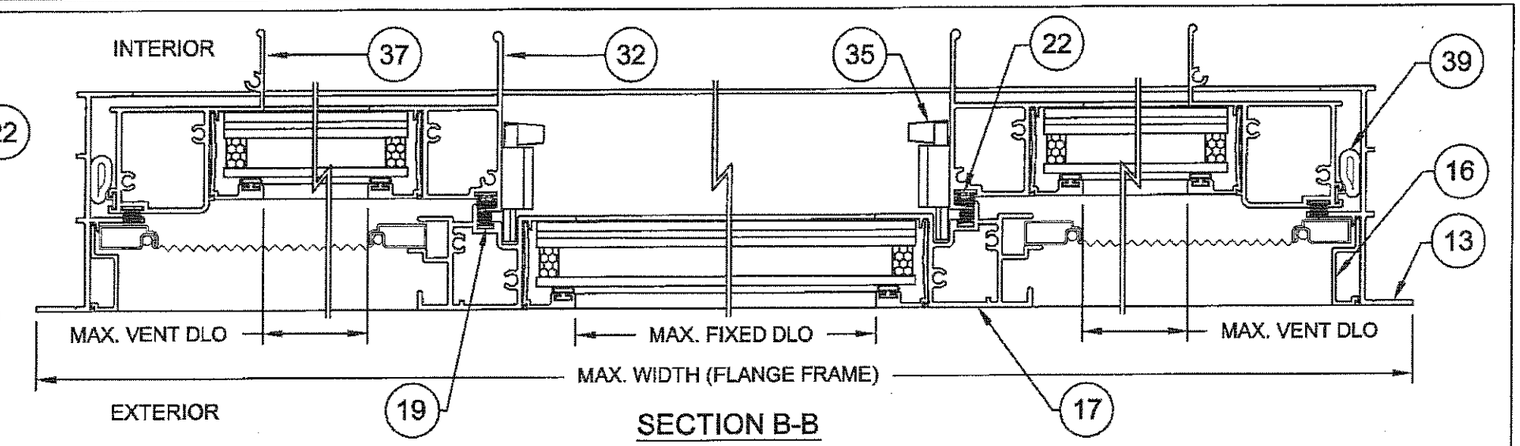

SECTION B-B
(HORIZONTAL SECTION - XOX SHOWN WITH FLANGE FRAME)

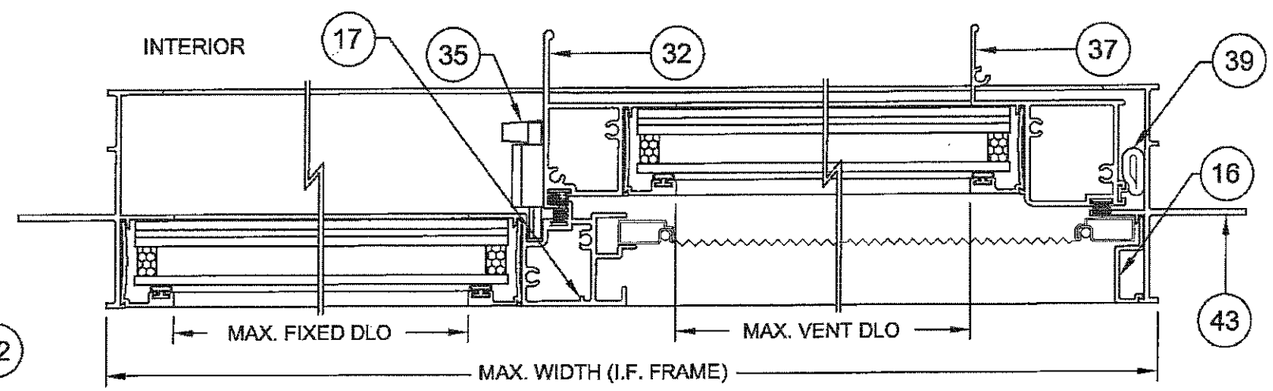

SECTION A-A
(HORIZONTAL SECTION - OX SHOWN WITH INTEGRAL FIN FRAME)

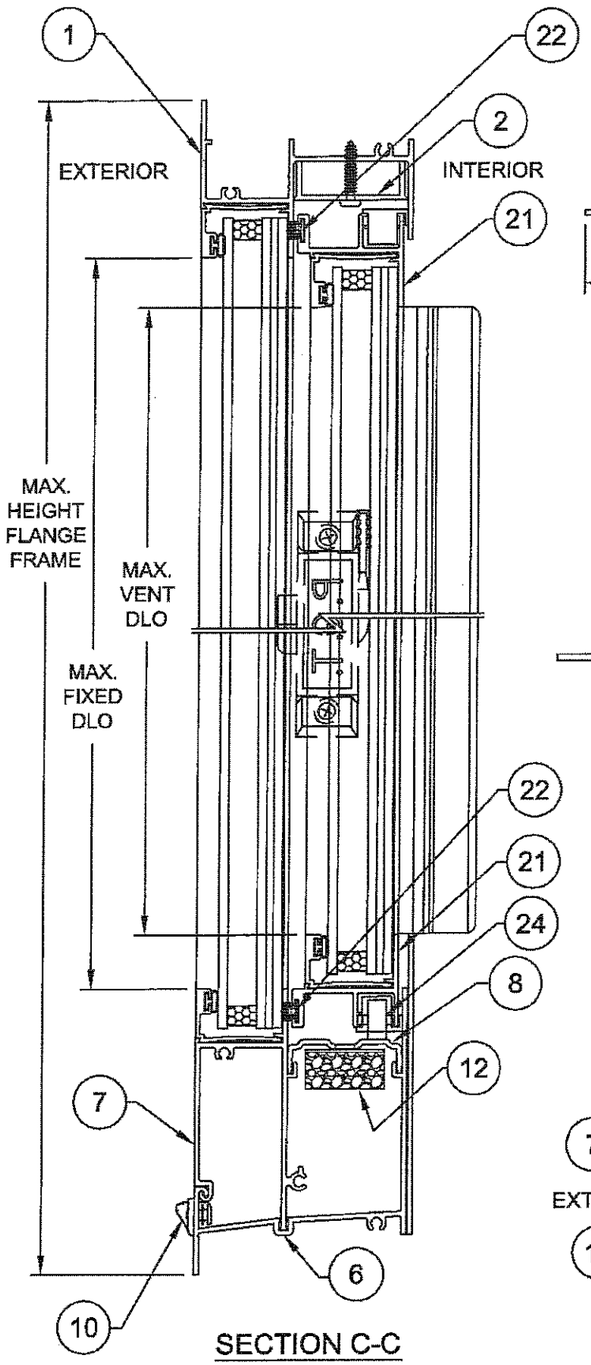

SECTION C-C
(VERTICAL SECTION, FLANGE FRAME)

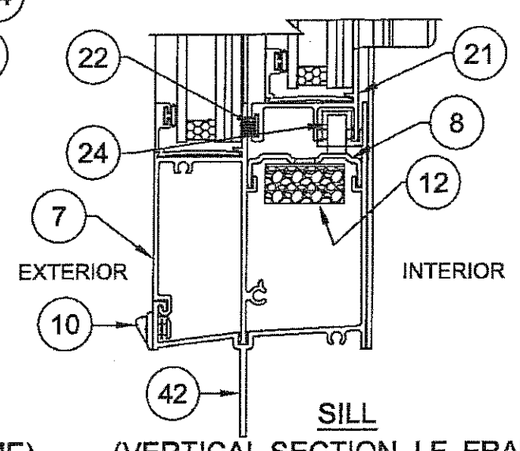

SILL
(VERTICAL SECTION, I.F. FRAME)

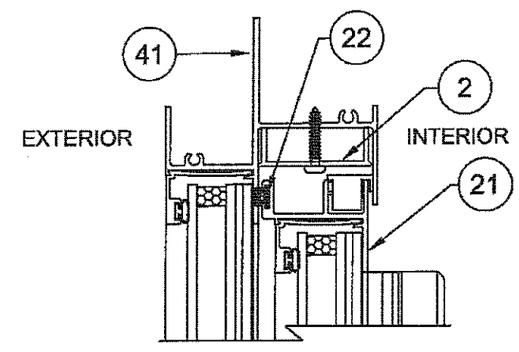

HEAD
(VERTICAL SECTION, I.F. FRAME)

PRODUCT REVISED
as complying with the Florida Building Code
NOA-No. 17-0411.06
Expiration Date 12/21/2021
By
Miami-Dade Product Control

Revision
3/24/17: NO CHANGES THIS SHEET.

1070 TECHNOLOGY DRIVE
N. VENICE, FL 34275
(941) 480-1600

COPYRIGHT © 2017 PGT INDUSTRIES, INC.
ALL RIGHTS RESERVED

CERT. OF AUTH. #29296

Series	Desc.	Title	Scale	Sheet	DWG No.	Drawn By	Date	Rev.
HR-710	SECTIONS, FLANGE & INT. FIN	ALUM. HORIZONTAL ROLLER, IMPACT	NTS	4 OF 11	4127-10	JENS ROSOWSKI	03/22/06	H

ANTHONY LYNN MILLER
LICENSE
No. 58705
8/23/17
STATE OF FLORIDA
PROFESSIONAL ENGINEER
A. LYNN MILLER, P.E.
P.E.# 58705

TABLE 4:

ITEM	DWG#	REV	DESCRIPTION	MAT'L	PGT#
1	4102	A	FLANGE FRAME HEAD	6063-T6 AL	612237
2	4025		SASH STOP (STD.) (ANTI LIFT CLIP)	6063-T5 AL	612244
3			#8 X 3/4 PH. PAN HEAD		7834AA
4	4053		SASH STOP COVER (SASH STOP)	6063-T5 AL	
6	4136		FLANGE FRAME SILL	6063-T6 AL	64136
7	4137		SILL ADAPTOR	6063-T6 AL	64137
8	4131		ROLLER TRACK	6063-T6 AL	64131
10	71298		WEEP HOLE COVER	POLYPROP.	71298
12	1626		ADHESIVE OPEN CELL FOAM PAD		7PAD1626
13	4002	A	FLANGE FRAME JAMB	6063-T6 AL	612225
14	4134		GASKET FOR MAIN FRAME SILL JOINT		74134W/K
15	1155		#8 X 1.000 QUAD PN. SMS		781PQA
16	4110	G	SCREEN ADAPTOR	6063-T5 AL	64110G
17	4054	B	FIXED MEETING RAIL	6063HD-T6 AL	64054A
19	4066		WSTP.,.187 X .230, FIN SEAL		64066G
21	4105		SASH TOP & BOTTOM RAIL	6063-T5 AL	612240
22	1683		WSTP.,.250 X .270 BACK, FIN SEAL		61683G
23	225-1		ROLLER HOUSING & GUIDE		42112HD
24	226		BRASS ROLLER WHEELS	BRASS	7BRWHL2
29	4128		HORIZONTAL ROLLER SASH TOP GUIDE	POLYPROP.	44128N
32	4006	D	SASH MEETING RAIL	6063HS-T6 AL	64006
33	1235		WSTP.,.170 X .270 BACK, FIN SEAL		67S16G
35	1096		SWEEP LATCH	DIE-CAST	71096
36	1016		#8 X .625 PH. FL. SMS		7858
37	4126		SASH SIDE RAIL	6063-T5 AL	64126
38	1683		WSTP.,.250 X .270 BACK, FIN SEAL		61683G
39	7070		BULB WEATHERSTRIP .187 X .275		67070K
40			LIFT RAIL COVER CAP		74078"C" L OR R
41	4139		I.F. FRAME HEAD	6063-T6 AL	64139
42	4140		I.F. FRAME SILL	6063-T6 AL	64140
43	4141		I.F. FRAME JAMB	6063-T6 AL	64141
50			GLAZING SILICONE, DOW 791, 899, 995 OR GE 7700		
51	1224		VINYL GLAZING BEAD BULB (THICK)		6TP247W,K
52	1225		VINYL GLAZING BEAD BULB (THIN)		6TP248K
53	4039	B	GLAZING BEAD - 5/16"	6063-T5 AL	64039B
54	4044	B	GLAZING BEAD - 5/16" W/GRILL KIT	6063-T5 AL	644703
55	4222	A	GLAZING BEAD - 7/16"	6063-T5 AL	64222
56	985	C	GLAZING BEAD - 7/16" W/GRILL KIT	6063-T5 AL	6985
59	4067		GLAZING BEAD - 13/16"	6063-T5 AL	64067
60	GLASS,		5/16" LAMI (1/8" A, .090 PVB, 1/8" A)		
61	"		5/16" LAMI (1/8" A, .090 PVB, 1/8" HS)		
62	"		5/16" LAMI (1/8" HS, .090 PVB, 1/8" HS)		
63	"		7/16" LAMI (3/16" A, .090 PVB, 3/16" A)		
64	"		7/16" LAMI (3/16" A, .090 PVB, 3/16" HS)		
65	"		7/16" LAMI (3/16" HS, .090 PVB, 3/16" HS)		
66	GLASS,		13/16" LAMI IG-1/8" A (MIN.), 3/8" AIR SPACE, 5/16" LAMI (1/8" A, .090 PVB, 1/8" A)		
67	"		13/16" LAMI IG-1/8" A (MIN.), 3/8" AIR SPACE, 5/16" LAMI (1/8" A, .090 PVB, 1/8" HS)		
68	"		13/16" LAMI IG-1/8" A (MIN.), 3/8" AIR SPACE, 5/16" LAMI (1/8" HS, .090 PVB, 1/8" HS)		
69	"		13/16" LAMI IG-3/16" A (MIN.), 5/16" AIR SPACE, 5/16" LAMI (1/8" A, .090 PVB, 1/8" A)		
70	"		13/16" LAMI IG-3/16" A (MIN.), 5/16" AIR SPACE, 5/16" LAMI (1/8" A, .090 PVB, 1/8" HS)		
71	"		13/16" LAMI IG-3/16" A (MIN.), 5/16" AIR SPACE, 5/16" LAMI (1/8" HS, .090 PVB, 1/8" HS)		
72	"		13/16" LAMI IG-1/8" A (MIN.), 1/4" AIR SPACE, 7/16" LAMI (3/16" A, .090 PVB, 3/16" A)		
73	"		13/16" LAMI IG-1/8" A (MIN.), 1/4" AIR SPACE, 7/16" LAMI (3/16" A, .090 PVB, 3/16" HS)		
74	"		13/16" LAMI IG-1/8" A (MIN.), 1/4" AIR SPACE, 7/16" LAMI (3/16" HS, .090 PVB, 3/16" HS)		
75	"		13/16" LAMI IG-3/16" A (MIN.), 3/16" AIR SPACE, 7/16" LAMI (3/16" A, .090 PVB, 3/16" A)		
76	"		13/16" LAMI IG-3/16" A (MIN.), 3/16" AIR SPACE, 7/16" LAMI (3/16" A, .090 PVB, 3/16" HS)		
77	"		13/16" LAMI IG-3/16" A (MIN.), 3/16" AIR SPACE, 7/16" LAMI (3/16" HS, .090 PVB, 3/16" HS)		
90	1014		SCREEN FRAME (HOR. & VER.)	3105-H14 AL	
91	1630		SCREEN CORNER KEY W/RINGS	POLYPROP.	
92	1631		SCREEN CORNER KEY W/OUT RINGS	POLYPROP.	
93	1073		SCREEN SPRING	ST.ST.	
94	1624		SCREEN SPLINE - .135 DIA. FOAM	EM PVC	
95	1635		SCREEN SPLINE - .135 DIA. HARD	EM PVC	
96			SCREEN	CLOTH	

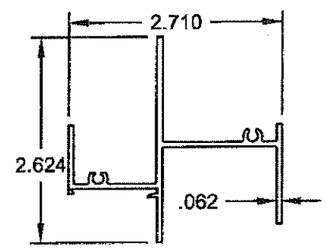

(41) I.F. FRAME HEAD
#4139, 6063-T6

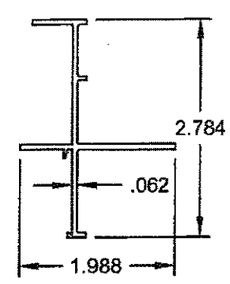

(43) I.F. FRAME JAMB
#4141, 6063-T6

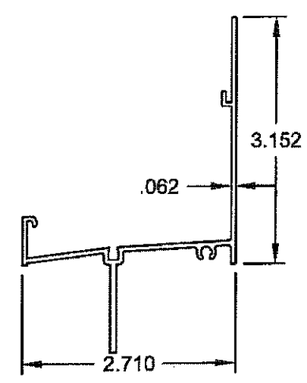

(42) I.F. FRAME SILL
#4140, 6063-T6

PRODUCT REVISED
as complying with the Florida Building Code
NOA-No. 17-0411.06
Expiration Date 12/21/2021
By
Miami-Dade Product Control

Revision: 3/24/17: CHANGED GLAZING SILICONE.

1070 TECHNOLOGY DRIVE
N. VENICE, FL 34275
(941) 480-1600

COPYRIGHT © 2017 PGT INDUSTRIES, INC.
ALL RIGHTS RESERVED

CERT. OF AUTH. #29296

Title: ALUM. HORIZONTAL ROLLER, IMPACT
Date: 03/22/06
Drawn By: JENS ROSOWSKI
DWG No.: 4127-10
Rev.: H
Sheet: 5 OF 11
Scale: NTS
Series: HR-710
Desc.: PARTS LIST

ANTHONY LYNN MILLER
LICENSE
No. 58705
8/25/17
STATE OF FLORIDA
PROFESSIONAL ENGINEER

A. LYNN MILLER, P.E.
P.E.# 58705

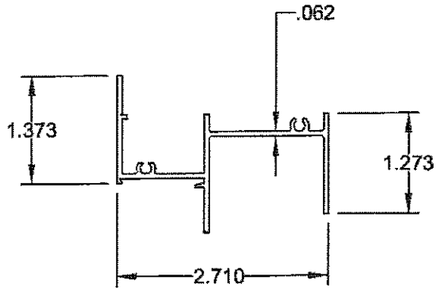

1 FLANGE FRAME HEAD
#4102A, 6063-T6

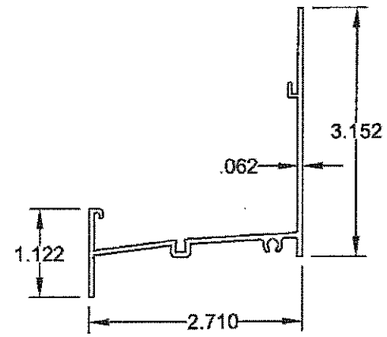

6 FLANGE FRAME SILL
#4136, 6063-T6

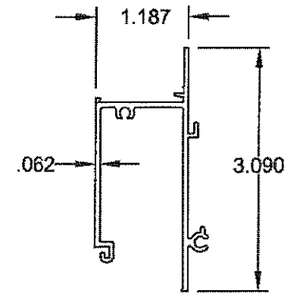

7 FRAME SILL ADAPTER
#4137, 6063-T6

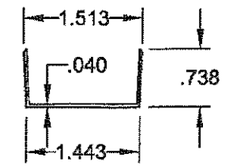

4 SASH STOP COVER
#4053, 6063-T5

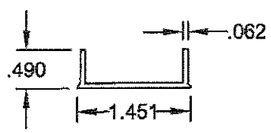

2 SASH STOP
#4025, 6063-T5

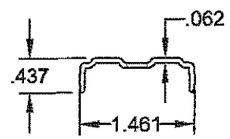

8 HORIZ. ROLLER TRACK
#4131, 6063-T6

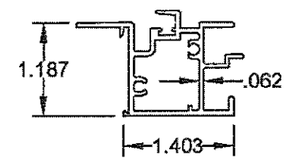

17 FIXED MEETING RAIL
#4054B, 6063HD-T6

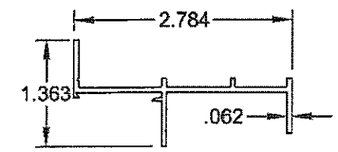

13 FLANGE FRAME JAMB
#4002A, 6063-T6

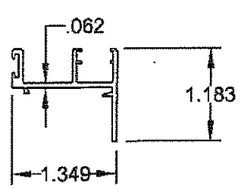

21 SASH TOP & BOTTOM RAIL
#4105, 6063-T5

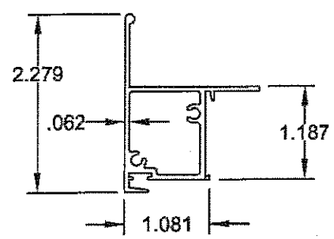

32 SASH MTG. RAIL
#4006D, 6063HS-T6

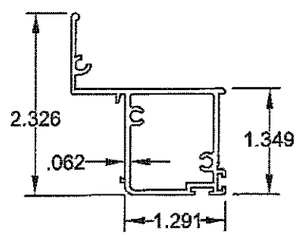

37 SASH SIDE RAIL
#4126, 6063-T5

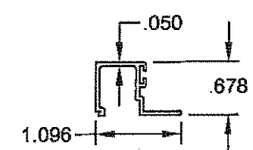

53 GLAZING BEAD, 5/16"
#4039B, 6063-T5

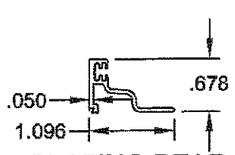

54 GLAZING BEAD, 5/16"
#4044B, 6063-T5
(USED W/ GRILL KIT)

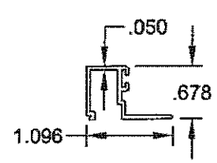

55 GLAZING BEAD 7/16"
#4222A, 6063-T5

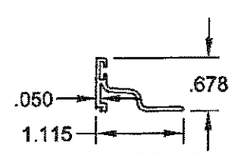

56 GLAZING BEAD, 7/16"
#985C, 6063-T5
(USED W/ GRILL KIT)

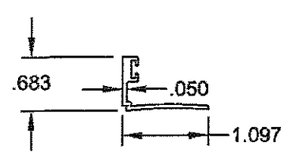

59 GLAZING BEAD, 13/16"
#4067, 6063-T5

PRODUCT REVISED
as complying with the Florida Building Code
NOA-No. 17-0411.06
Expiration Date 12/21/2021
By
Miami-Dade Product Control

Revision: 3/24/17: NO CHANGES THIS SHEET.

1070 TECHNOLOGY DRIVE
N. VENICE, FL 34275
(941) 480-1600

COPYRIGHT © 2017 PGT INDUSTRIES, INC.
ALL RIGHTS RESERVED

CERT. OF AUTH. #29296

Series	Desc.	Scale	Sheet	DWG No.	Rev.
HR-710	EXTRUSIONS	NTS	6 OF 11	4127-10	H

Title: ALUM. HORIZONTAL ROLLER, IMPACT
Drawn By: JENS ROSOWSKI
Date: 03/22/06

ANTHONY LYNN MILLER
LICENSE
No. 58705
STATE OF FLORIDA
PROFESSIONAL ENGINEER
8/23/17

A. LYNN MILLER, P.E.
P.E.# 58705

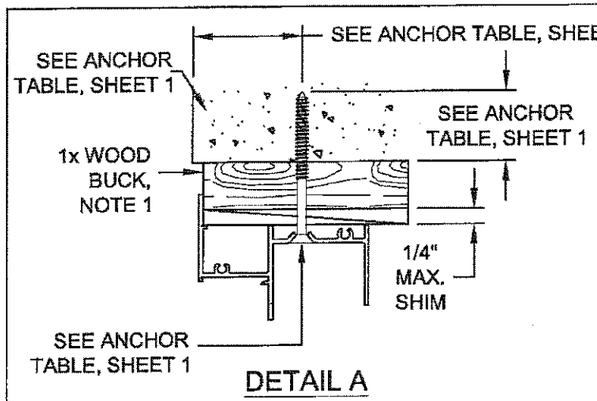

DETAIL A

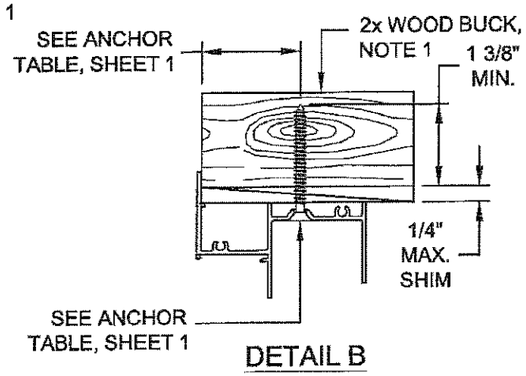

DETAIL B

TYPICAL FLANGE FRAME HEAD SECTIONS

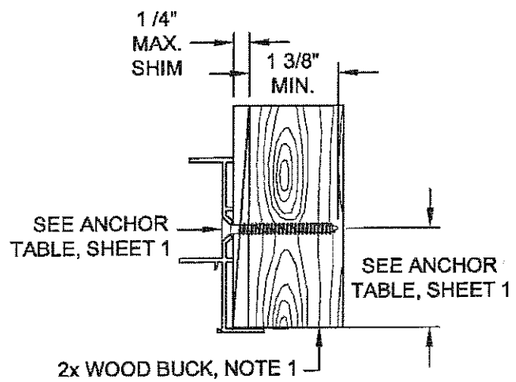

DETAIL E

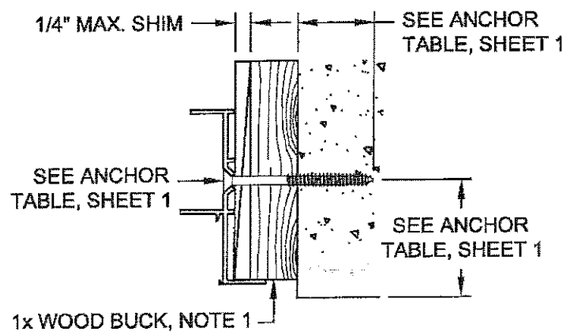

DETAIL F

TYPICAL FLANGE FRAME JAMB SECTIONS

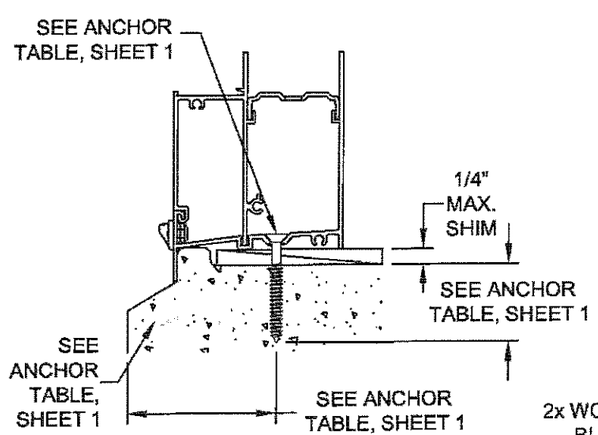

DETAIL C

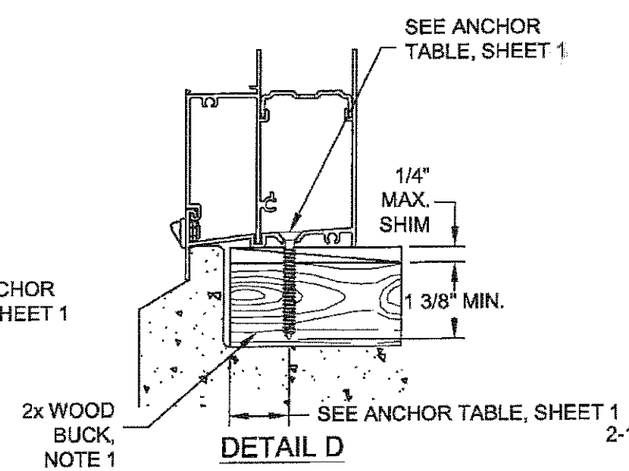

DETAIL D

TYPICAL FLANGE FRAME SILL SECTIONS

NOTES:

1. WOOD BUCKS DEPICTED IN THE SECTIONS ON THIS PAGE AS 1x ARE BUCKS WHOSE TOTAL THICKNESS IS LESS THAN 1 1/2". 1x WOOD BUCKS ARE OPTIONAL IF UNIT CAN BE INSTALLED DIRECTLY TO SOLID CONCRETE OR CMU. WOOD BUCKS DEPICTED AS 2x ARE 1 1/2" THICK OR GREATER. INSTALLATION TO THE SUBSTRATE OF WOOD BUCKS TO BE ENGINEERED BY OTHERS OR AS APPROVED BY AUTHORITY HAVING JURISDICTION.

2. FOR ATTACHMENT TO METAL: THE METAL STRUCTURAL MEMBER SHALL BE OF A SIZE TO PROVIDE FULL SUPPORT TO THE WINDOW FRAME SIMILAR TO THAT SHOWN IN THESE DETAILS FOR 2x WOOD BUCKS.

3. MATERIALS, INCLUDING BUT NOT LIMITED TO STEEL SCREWS, THAT COME INTO CONTACT WITH OTHER DISSIMILAR MATERIALS SHALL MEET THE REQUIREMENTS OF FLORIDA BUILDING CODE.

4. 0.131" DIA. MIN. X 2 1/2" NAIL AT CORNERS AND 5" O.C. TYPICAL DETAILS G, H & I.

INTERIOR
(JAMB DETAILS E, F & I)
EXTERIOR

EXTERIOR INTERIOR
(HEAD & SILL DETAILS A, B, C, D, G & H)

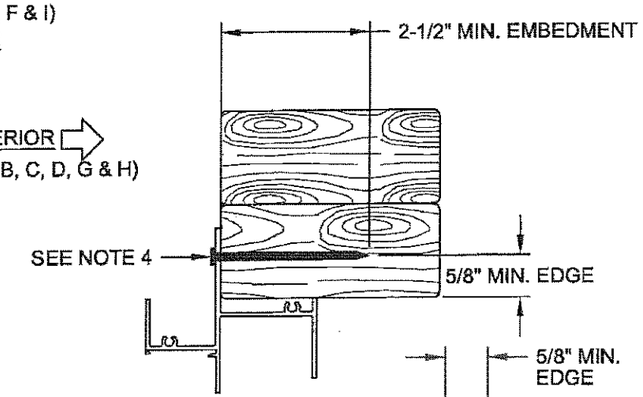

DETAIL H (HEAD)

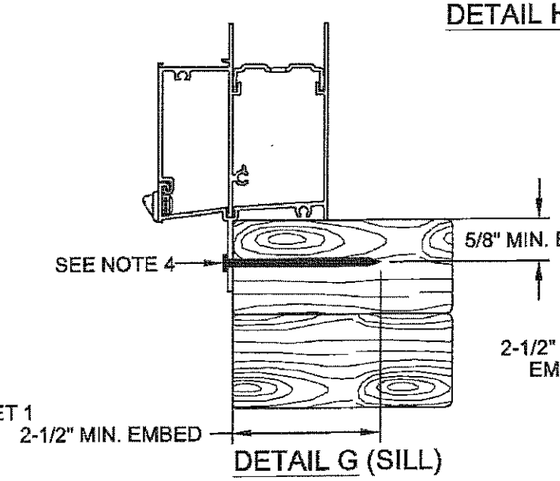

DETAIL G (SILL)

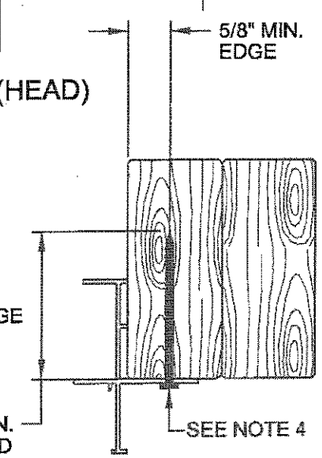

DETAIL I (JAMB)

TYPICAL INTEGRAL FIN FRAME SECTIONS

PRODUCT REVISED
as complying with the Florida Building Code
NOA-No. 17-0411.06
Expiration Date 12/21/2021
By
Miami-Dade Product Control

Revision
3/24/17: REVISED NOTES TO COMPLY WITH NEW ANCHORAGE. ADDED NOTE 4.

1070 TECHNOLOGY DRIVE
N. VENICE, FL 34275
(941) 480-1600

COPYRIGHT © 2017 PGT INDUSTRIES, INC.
ALL RIGHTS RESERVED

CERT. OF AUTH. #29296

Series	Desc.	Sheet	Scale	DWG No.	Drawn By	Date	Rev.
HR-710	ANCHORAGE DETAILS	7 OF 11	NTS	4127-10	JENS ROSOWSKI	03/22/06	H

Title: ALUM. HORIZONTAL ROLLER, IMPACT

ANTHONY LYNN MILLER
LICENSE
No. 58705
STATE OF FLORIDA
PROFESSIONAL ENGINEER
8/29/17

A. LYNN MILLER, P.E.
P.E.# 58705

TABLE 5:

Maximum Design Pressure, DP (psf)
XO or OX

Overall Width	Overall Height	Glass Type A, B, G, H	Glass Type C, D, E, F, I, J, K, L
37"	26"	+75.0 / -75.0	+75.0 / -75.0
48"		+75.0 / -75.0	+75.0 / -75.0
53-1/8"		+75.0 / -75.0	+75.0 / -75.0
60"		+75.0 / -75.0	+75.0 / -75.0
66"		+75.0 / -75.0	+75.0 / -75.0
72"		+75.0 / -75.0	+75.0 / -75.0
74"		+75.0 / -75.0	+75.0 / -75.0
37"	36"	+75.0 / -75.0	+75.0 / -75.0
48"		+75.0 / -75.0	+75.0 / -75.0
53-1/8"		+75.0 / -75.0	+75.0 / -75.0
60"		+75.0 / -75.0	+75.0 / -75.0
66"		+75.0 / -75.0	+75.0 / -75.0
72"		+75.0 / -75.0	+75.0 / -75.0
74"		+75.0 / -75.0	+75.0 / -75.0
37"	38-3/8"	+75.0 / -75.0	+75.0 / -75.0
48"		+75.0 / -75.0	+75.0 / -75.0
53-1/8"		+75.0 / -75.0	+75.0 / -75.0
60"		+75.0 / -75.0	+75.0 / -75.0
66"		+75.0 / -75.0	+75.0 / -75.0
72"		+75.0 / -75.0	+75.0 / -75.0
74"		+75.0 / -75.0	+75.0 / -75.0
37"	48"	+75.0 / -75.0	+75.0 / -75.0
48"		+75.0 / -75.0	+75.0 / -75.0
53-1/8"		+75.0 / -75.0	+75.0 / -75.0
60"		+75.0 / -75.0	+75.0 / -75.0
66"		+75.0 / -75.0	+75.0 / -75.0
72"		+75.0 / -75.0	+75.0 / -75.0
74"		+75.0 / -75.0	+75.0 / -75.0
37"	50-5/8"	+75.0 / -75.0	+75.0 / -75.0
48"		+75.0 / -75.0	+75.0 / -75.0
53-1/8"		+75.0 / -75.0	+75.0 / -75.0
60"		+75.0 / -75.0	+75.0 / -75.0
66"		+75.0 / -75.0	+75.0 / -75.0
72"		+75.0 / -75.0	+75.0 / -75.0
74"		+75.0 / -75.0	+75.0 / -75.0
37"	54"	+75.0 / -75.0	+75.0 / -75.0
48"		+75.0 / -75.0	+75.0 / -75.0
53-1/8"		+75.0 / -75.0	+75.0 / -75.0
60"		+75.0 / -75.0	+75.0 / -75.0
66"		+75.0 / -75.0	+75.0 / -75.0
72"		+75.0 / -75.0	+75.0 / -75.0
74"		+75.0 / -75.0	+75.0 / -75.0
37"	60"	+75.0 / -75.0	+75.0 / -75.0
48"		+75.0 / -75.0	+75.0 / -75.0
53-1/8"		+75.0 / -75.0	+75.0 / -75.0
60"		+75.0 / -75.0	+75.0 / -75.0
66"		+74.2 / -74.2	+75.0 / -75.0
72"		+69.6 / -69.6	+75.0 / -75.0
74"		+68.1 / -68.1	+75.0 / -75.0
37"	63"	+75.0 / -75.0	+75.0 / -75.0
48"		+75.0 / -75.0	+75.0 / -75.0
53-1/8"		+75.0 / -75.0	+75.0 / -75.0
60"		+75.0 / -75.0	+75.0 / -75.0
66"		+70.2 / -70.2	+75.0 / -75.0
72"		+65.2 / -65.2	+75.0 / -75.0
74"		+63.8 / -63.8	+75.0 / -75.0

FOR ANCHORAGE SEE SHEET 9.

TABLE 6:

Maximum Design Pressure, DP (psf)
XOX, 1/3 - 1/3 - 1/3

Overall Width	Overall Height	Glass Type A, B, C, G, H, I	Glass Type D, E, F, J, K, L
48"	26"	+60.0 / -60.0	+75.0 / -75.0
53-1/8"		+60.0 / -60.0	+75.0 / -75.0
60"		+60.0 / -60.0	+75.0 / -75.0
66"		+60.0 / -60.0	+75.0 / -75.0
74"		+60.0 / -60.0	+75.0 / -75.0
84"		+60.0 / -60.0	+75.0 / -75.0
86-7/16"		+60.0 / -60.0	+75.0 / -75.0
48"	36"	+60.0 / -60.0	+75.0 / -75.0
53-1/8"		+60.0 / -60.0	+75.0 / -75.0
60"		+60.0 / -60.0	+75.0 / -75.0
66"		+60.0 / -60.0	+75.0 / -75.0
74"		+60.0 / -60.0	+75.0 / -75.0
84"		+60.0 / -60.0	+75.0 / -75.0
86-7/16"		+60.0 / -60.0	+75.0 / -75.0
48"	38-3/8"	+60.0 / -60.0	+75.0 / -75.0
53-1/8"		+60.0 / -60.0	+75.0 / -75.0
60"		+60.0 / -60.0	+75.0 / -75.0
66"		+60.0 / -60.0	+75.0 / -75.0
74"		+60.0 / -60.0	+75.0 / -75.0
84"		+60.0 / -60.0	+75.0 / -75.0
86-7/16"		+60.0 / -60.0	+75.0 / -75.0
48"	48"	+60.0 / -60.0	+75.0 / -75.0
53-1/8"		+60.0 / -60.0	+75.0 / -75.0
60"		+60.0 / -60.0	+75.0 / -75.0
66"		+60.0 / -60.0	+75.0 / -75.0
74"		+60.0 / -60.0	+75.0 / -75.0
84"		+60.0 / -60.0	+75.0 / -75.0
86-7/16"		+60.0 / -60.0	+75.0 / -75.0
48"	50-5/8"	+60.0 / -60.0	+75.0 / -75.0
53-1/8"		+60.0 / -60.0	+75.0 / -75.0
60"		+60.0 / -60.0	+75.0 / -75.0
66"		+60.0 / -60.0	+75.0 / -75.0
74"		+60.0 / -60.0	+75.0 / -75.0
84"		+60.0 / -60.0	+75.0 / -75.0
86-7/16"		+60.0 / -60.0	+75.0 / -75.0
48"	54"	+60.0 / -60.0	+75.0 / -75.0
53-1/8"		+60.0 / -60.0	+75.0 / -75.0
60"		+60.0 / -60.0	+75.0 / -75.0
66"		+60.0 / -60.0	+75.0 / -75.0
74"		+60.0 / -60.0	+75.0 / -75.0
84"		+60.0 / -60.0	+75.0 / -75.0
86-7/16"		+60.0 / -60.0	+75.0 / -75.0
48"	60"	+60.0 / -60.0	+75.0 / -75.0
53-1/8"		+60.0 / -60.0	+75.0 / -75.0
60"		+60.0 / -60.0	+75.0 / -75.0
66"		+60.0 / -60.0	+75.0 / -75.0
74"		+60.0 / -60.0	+75.0 / -75.0
84"		+60.0 / -60.0	+75.0 / -75.0
86-7/16"		+60.0 / -60.0	+75.0 / -75.0
48"	63"	+60.0 / -60.0	+75.0 / -75.0
53-1/8"		+60.0 / -60.0	+75.0 / -75.0
60"		+60.0 / -60.0	+75.0 / -75.0
66"		+60.0 / -60.0	+75.0 / -75.0
74"		+60.0 / -60.0	+75.0 / -75.0
84"		+60.0 / -60.0	+75.0 / -75.0
86-7/16"		+60.0 / -60.0	+75.0 / -75.0

FOR ANCHORAGE SEE SHEET 10.

TABLE 7:

Maximum Design Pressure, DP (psf)
XOX, 1/4 - 1/2 - 1/4

Overall Width	Overall Height	Glass Type A, B, G, H	Glass Type C, I	Glass Type D, E, F, J, K, L
53-1/8"	26"	+60.0 / -60.0	+60.0 / -60.0	+75.0 / -75.0
60"		+60.0 / -60.0	+60.0 / -60.0	+75.0 / -75.0
74"		+60.0 / -60.0	+60.0 / -60.0	+75.0 / -75.0
84"		+60.0 / -60.0	+60.0 / -60.0	+75.0 / -75.0
96"		+60.0 / -60.0	+60.0 / -60.0	+75.0 / -75.0
106-3/8"		+60.0 / -60.0	+60.0 / -60.0	+75.0 / -75.0
108"		+60.0 / -60.0	+60.0 / -60.0	+75.0 / -75.0
111"		+60.0 / -60.0	+60.0 / -60.0	+75.0 / -75.0
53-1/8"	36"	+60.0 / -60.0	+60.0 / -60.0	+75.0 / -75.0
60"		+60.0 / -60.0	+60.0 / -60.0	+75.0 / -75.0
74"		+60.0 / -60.0	+60.0 / -60.0	+75.0 / -75.0
84"		+60.0 / -60.0	+60.0 / -60.0	+75.0 / -75.0
96"		+60.0 / -60.0	+60.0 / -60.0	+75.0 / -75.0
106-3/8"		+60.0 / -60.0	+60.0 / -60.0	+75.0 / -75.0
108"		+60.0 / -60.0	+60.0 / -60.0	+75.0 / -75.0
111"		+60.0 / -60.0	+60.0 / -60.0	+75.0 / -75.0
53-1/8"	38-3/8"	+60.0 / -60.0	+60.0 / -60.0	+75.0 / -75.0
60"		+60.0 / -60.0	+60.0 / -60.0	+75.0 / -75.0
74"		+60.0 / -60.0	+60.0 / -60.0	+75.0 / -75.0
84"		+60.0 / -60.0	+60.0 / -60.0	+75.0 / -75.0
96"		+60.0 / -60.0	+60.0 / -60.0	+75.0 / -75.0
106-3/8"		+60.0 / -60.0	+60.0 / -60.0	+75.0 / -75.0
108"		+60.0 / -60.0	+60.0 / -60.0	+75.0 / -75.0
111"		+60.0 / -60.0	+60.0 / -60.0	+75.0 / -75.0
53-1/8"	48"	+60.0 / -60.0	+60.0 / -60.0	+75.0 / -75.0
60"		+60.0 / -60.0	+60.0 / -60.0	+75.0 / -75.0
74"		+60.0 / -60.0	+60.0 / -60.0	+75.0 / -75.0
84"		+60.0 / -60.0	+60.0 / -60.0	+75.0 / -75.0
96"		+60.0 / -60.0	+60.0 / -60.0	+75.0 / -75.0
106-3/8"		+60.0 / -60.0	+60.0 / -60.0	+75.0 / -75.0
108"		+60.0 / -60.0	+60.0 / -60.0	+75.0 / -75.0
111"		+60.0 / -60.0	+60.0 / -60.0	+75.0 / -75.0
53-1/8"	50-5/8"	+60.0 / -60.0	+60.0 / -60.0	+75.0 / -75.0
60"		+60.0 / -60.0	+60.0 / -60.0	+75.0 / -75.0
74"		+60.0 / -60.0	+60.0 / -60.0	+75.0 / -75.0
84"		+60.0 / -60.0	+60.0 / -60.0	+75.0 / -75.0
96"		+60.0 / -60.0	+60.0 / -60.0	+75.0 / -75.0
106-3/8"		+60.0 / -60.0	+60.0 / -60.0	+75.0 / -75.0
108"		+60.0 / -60.0	+60.0 / -60.0	+75.0 / -75.0
111"		+60.0 / -60.0	+60.0 / -60.0	+75.0 / -75.0
53-1/8"	54"	+60.0 / -60.0	+60.0 / -60.0	+75.0 / -75.0
60"		+60.0 / -60.0	+60.0 / -60.0	+75.0 / -75.0
74"		+60.0 / -60.0	+60.0 / -60.0	+75.0 / -75.0
84"		+60.0 / -60.0	+60.0 / -60.0	+75.0 / -75.0
96"		+60.0 / -60.0	+60.0 / -60.0	+75.0 / -75.0
106-3/8"		+60.0 / -60.0	+60.0 / -60.0	+75.0 / -75.0
108"		+60.0 / -60.0	+60.0 / -60.0	+75.0 / -75.0
111"		+59.5 / -59.5	+60.0 / -60.0	+75.0 / -75.0
53-1/8"	60"	+60.0 / -60.0	+60.0 / -60.0	+75.0 / -75.0
60"		+60.0 / -60.0	+60.0 / -60.0	+75.0 / -75.0
74"		+60.0 / -60.0	+60.0 / -60.0	+75.0 / -75.0
84"		+60.0 / -60.0	+60.0 / -60.0	+75.0 / -75.0
96"		+58.8 / 58.8	+60.0 / -60.0	+75.0 / -75.0
106-3/8"		+55.2 / 55.2	+60.0 / -60.0	+75.0 / -75.0
108"		+54.6 / -54.6	+60.0 / -60.0	+75.0 / -75.0
111"		+53.6 / -53.6	+60.0 / -60.0	+75.0 / -75.0
53-1/8"	63"	+60.0 / -60.0	+60.0 / -60.0	+75.0 / -75.0
60"		+60.0 / -60.0	+60.0 / -60.0	+75.0 / -75.0
74"		+60.0 / -60.0	+60.0 / -60.0	+75.0 / -75.0
84"		+60.0 / -60.0	+60.0 / -60.0	+75.0 / -75.0
96"		+56.2 / 56.2	+60.0 / -60.0	+75.0 / -75.0
106-3/8"		+52.3 / 52.3	+60.0 / -60.0	+75.0 / -75.0
108"		+51.7 / -51.7	+60.0 / -60.0	+75.0 / -75.0
111"		+50.9 / -50.9	+60.0 / -60.0	+75.0 / -75.0

FOR ANCHORAGE SEE SHEET 11.

GLASS TYPES:

A. 5/16" LAMI - (1/8" A,.090" PVB, 1/8" A)
B. 5/16" LAMI - (1/8" A,.090" PVB, 1/8" HS)
C. 5/16" LAMI - (1/8" HS,.090" PVB, 1/8" HS)
D. 7/16" LAMI - (3/16" A,.090" PVB, 3/16" A)
E. 7/16" LAMI - (3/16" A,.090" PVB, 3/16" HS)
F. 7/16" LAMI - (3/16" HS,.090" PVB, 3/16" HS)
G. 13/16" LAMI IG - 1/8" OR 3/16" A (MIN.), 5/16" OR 3/8" SPACE, 5/16" LAMI - (1/8" A,.090" PVB, 1/8" A)
H. 13/16" LAMI IG - 1/8" OR 3/16" A (MIN.), 5/16" OR 3/8" SPACE, 5/16" LAMI - (1/8" A,.090" PVB, 1/8" HS)
I. 13/16" LAMI IG - 1/8" OR 3/16" A (MIN.), 5/16" OR 3/8" SPACE, 5/16" LAMI - (1/8" HS,.090" PVB, 1/8" HS)
J. 13/16" LAMI IG - 1/8" OR 3/16" A (MIN.), 3/16" OR 1/4" SPACE, 7/16" LAMI - (3/16" A,.090" PVB, 3/16" A)
K. 13/16" LAMI IG - 1/8" OR 3/16" A (MIN.), 3/16" OR 1/4" SPACE, 7/16" LAMI - (3/16" A,.090" PVB, 3/16" HS)
L. 13/16" LAMI IG - 1/8" OR 3/16" A (MIN.), 3/16" OR 1/4" SPACE, 7/16" LAMI - (3/16" HS,.090" PVB, 3/16" HS)

NOTES

1) FOR WINDOW SIZES NOT SHOWN, GO TO NEXT LARGER WINDOW IN TABLE.

2) OVERALL FLANGE DIMENSIONS SHOWN. FOR FIN WINDOWS, SUBTRACT 1" FROM TABLE SIZE DIMENSIONS.

3) FOR INSTALLATION IN THE HVHZ ABOVE 30 FT, GLASS TYPES G - L SHALL HAVE A TEMPERED I.G. GLASS CAP. BOTH THE DP AND ANCHOR QUANTITY REMAIN UNCHANGED.

4) SEE GLASS TYPE DESCRIPTIONS ON SHEET 2.

PRODUCT REVISED
as complying with the Florida Building Code
NOA-No. 17-0411.06
Expiration Date 12/21/2021
By
Miami-Dade Product Control

Revision: 3/24/17: UPDATED TABLE

1070 TECHNOLOGY DRIVE
N. VENICE, FL 34275
(941) 480-1600

COPYRIGHT © 2017 PGT INDUSTRIES, INC.
ALL RIGHTS RESERVED

CERT. OF AUTH. #29296

Title	ALUM. HORIZONTAL ROLLER, IMPACT
Desc.	DESIGN PRESSURES
Series	HR-710
Scale	NTS
Sheet	8 OF 11
DWG No.	4127-10
Drawn By	JENS ROSOWSKI
Date	03/22/06
Rev.	H

ANTHONY LYNN MILLER
LICENSE
No. 58705
STATE OF FLORIDA
PROFESSIONAL ENGINEER
8/23/17
A. LYNN MILLER, P.E.
P.E.# 58705

TABLE 8:

Anchor Quantities, XO or OX with Glass Types A, B, C, G, H & I

Overall Width	Overall Height	Anchor Group A		Anchor Group B		Anchor Group C	
		Head & Sill	Jamb	Head & Sill	Jamb	Head & Sill	Jamb
37"	26"	1+C2+1	2	1+C2+1	2	1+C2+1	2
48"		1+C2+1	2	1+C2+1	2	1+C2+1	2
53-1/8"		1+C2+1	2	1+C2+1	2	1+C2+1	2
60"		1+C2+1	2	1+C2+1	2	1+C2+1	2
66"		1+C2+1	2	1+C2+1	2	1+C2+1	2
72"		2+C2+2	2	1+C2+1	2	1+C2+1	2
74"		2+C2+2	2	1+C2+1	2	1+C2+1	2
37"	36"	1+C2+1	2	1+C2+1	2	1+C2+1	2
48"		1+C2+1	2	1+C2+1	2	1+C2+1	2
53-1/8"		1+C2+1	2	1+C2+1	2	1+C2+1	2
60"		1+C2+1	2	1+C2+1	2	1+C2+1	2
66"		1+C2+1	2	1+C2+1	2	1+C2+1	2
72"		2+C2+2	2	1+C2+1	2	1+C2+1	2
74"		2+C2+2	2	1+C2+1	2	1+C2+1	2
37"	38-3/8"	1+C2+1	2	1+C2+1	2	1+C2+1	2
48"		1+C2+1	2	1+C2+1	2	1+C2+1	2
53-1/8"		1+C2+1	2	1+C2+1	2	1+C2+1	2
60"		1+C2+1	2	1+C2+1	2	1+C2+1	2
66"		1+C2+1	2	1+C2+1	2	1+C2+1	2
72"		2+C2+2	2	1+C2+1	2	1+C2+1	2
74"		2+C2+2	2	1+C2+1	2	1+C2+1	2
37"	48"	1+C2+1	3	1+C2+1	3	1+C2+1	3
48"		1+C2+1	3	1+C2+1	3	1+C2+1	3
53-1/8"		1+C2+1	3	1+C2+1	3	1+C2+1	3
60"		1+C2+1	3	1+C2+1	3	1+C2+1	3
66"		1+C2+1	3	1+C2+1	3	1+C2+1	3
72"		2+C2+2	3	1+C2+1	3	1+C2+1	3
74"		2+C2+2	3	1+C2+1	3	1+C2+1	3
37"	50-5/8"	1+C2+1	3	1+C2+1	3	1+C2+1	3
48"		1+C2+1	3	1+C2+1	3	1+C2+1	3
53-1/8"		1+C2+1	3	1+C2+1	3	1+C2+1	3
60"		1+C2+1	3	1+C2+1	3	1+C2+1	3
66"		1+C3+1	3	1+C2+1	3	1+C2+1	3
72"		2+C3+2	3	1+C2+1	3	1+C2+1	3
74"		2+C3+2	3	1+C2+1	3	1+C2+1	3
37"	54"	1+C2+1	3	1+C2+1	3	1+C2+1	3
48"		1+C2+1	3	1+C2+1	3	1+C2+1	3
53-1/8"		1+C2+1	3	1+C2+1	3	1+C2+1	3
60"		1+C3+1	3	1+C2+1	3	1+C2+1	3
66"		1+C3+1	3	1+C2+1	3	1+C2+1	3
72"		2+C3+2	3	1+C2+1	3	1+C2+1	3
74"		2+C3+2	3	1+C2+1	3	1+C2+1	3
37"	60"	1+C2+1	3	1+C2+1	3	1+C2+1	3
48"		1+C3+1	3	1+C2+1	3	1+C2+1	3
53-1/8"		1+C3+1	3	1+C2+1	3	1+C2+1	3
60"		1+C3+1	3	1+C2+1	3	1+C2+1	3
66"		1+C3+1	3	1+C2+1	3	1+C2+1	3
72"		2+C3+2	3	1+C2+1	3	1+C2+1	3
74"		2+C3+2	3	1+C2+1	3	1+C2+1	3
37"	63"	1+C2+1	3	1+C2+1	3	1+C2+1	3
48"		1+C3+1	3	1+C2+1	3	1+C2+1	3
53-1/8"		1+C3+1	3	1+C2+1	3	1+C2+1	3
60"		1+C3+1	3	1+C2+1	3	1+C2+1	3
66"		1+C3+1	3	1+C2+1	3	1+C2+1	3
72"		2+C3+2	3	1+C2+1	3	1+C2+1	3
74"		2+C3+2	3	1+C2+1	3	1+C2+1	3

TABLE 9:

Anchor Quantities, XO or OX with Glass Types D, E, F, J, K & L

Overall Width	Overall Height	Anchor Group A		Anchor Group B		Anchor Group C	
		Head & Sill	Jamb	Head & Sill	Jamb	Head & Sill	Jamb
37"	26"	1+C2+1	2	1+C2+1	2	1+C2+1	2
48"		1+C2+1	2	1+C2+1	2	1+C2+1	2
53-1/8"		1+C2+1	2	1+C2+1	2	1+C2+1	2
60"		1+C2+1	2	1+C2+1	2	1+C2+1	2
66"		1+C2+1	2	1+C2+1	2	1+C2+1	2
72"		2+C2+2	2	1+C2+1	2	1+C2+1	2
74"		2+C2+2	2	1+C2+1	2	1+C2+1	2
37"	36"	1+C2+1	2	1+C2+1	2	1+C2+1	2
48"		1+C2+1	2	1+C2+1	2	1+C2+1	2
53-1/8"		1+C2+1	2	1+C2+1	2	1+C2+1	2
60"		1+C2+1	2	1+C2+1	2	1+C2+1	2
66"		1+C2+1	2	1+C2+1	2	1+C2+1	2
72"		2+C2+2	2	1+C2+1	2	1+C2+1	2
74"		2+C2+2	2	1+C2+1	2	1+C2+1	2
37"	38-3/8"	1+C2+1	2	1+C2+1	2	1+C2+1	2
48"		1+C2+1	2	1+C2+1	2	1+C2+1	2
53-1/8"		1+C2+1	2	1+C2+1	2	1+C2+1	2
60"		1+C2+1	2	1+C2+1	2	1+C2+1	2
66"		1+C2+1	2	1+C2+1	2	1+C2+1	2
72"		2+C2+2	2	1+C2+1	2	1+C2+1	2
74"		2+C2+2	2	1+C2+1	2	1+C2+1	2
37"	48"	1+C2+1	3	1+C2+1	3	1+C2+1	3
48"		1+C2+1	3	1+C2+1	3	1+C2+1	3
53-1/8"		1+C2+1	3	1+C2+1	3	1+C2+1	3
60"		1+C2+1	3	1+C2+1	3	1+C2+1	3
66"		1+C2+1	3	1+C2+1	3	1+C2+1	3
72"		2+C2+2	3	1+C2+1	3	1+C2+1	3
74"		2+C2+2	3	1+C2+1	3	1+C2+1	3
37"	50-5/8"	1+C2+1	3	1+C2+1	3	1+C2+1	3
48"		1+C2+1	3	1+C2+1	3	1+C2+1	3
53-1/8"		1+C2+1	3	1+C2+1	3	1+C2+1	3
60"		1+C2+1	3	1+C2+1	3	1+C2+1	3
66"		1+C3+1	3	1+C2+1	3	1+C2+1	3
72"		2+C3+2	3	1+C2+1	3	1+C2+1	3
74"		2+C3+2	3	1+C2+1	3	1+C2+1	3
37"	54"	1+C2+1	3	1+C2+1	3	1+C2+1	3
48"		1+C2+1	3	1+C2+1	3	1+C2+1	3
53-1/8"		1+C2+1	3	1+C2+1	3	1+C2+1	3
60"		1+C3+1	3	1+C2+1	3	1+C2+1	3
66"		1+C3+1	3	1+C2+1	3	1+C2+1	3
72"		2+C3+2	3	1+C2+1	3	1+C2+1	3
74"		2+C3+2	3	1+C2+1	3	1+C2+1	3
37"	60"	1+C2+1	3	1+C2+1	3	1+C2+1	3
48"		1+C3+1	3	1+C2+1	3	1+C2+1	3
53-1/8"		1+C3+1	3	1+C2+1	3	1+C2+1	3
60"		1+C3+1	3	1+C2+1	3	1+C2+1	3
66"		1+C3+1	3	1+C2+1	3	1+C2+1	3
72"		2+C3+2	3	1+C2+1	3	1+C2+1	3
74"		2+C3+2	3	1+C2+1	3	1+C2+1	3
37"	63"	1+C2+1	3	1+C2+1	3	1+C2+1	3
48"		1+C3+1	3	1+C2+1	3	1+C2+1	3
53-1/8"		1+C3+1	3	1+C2+1	3	1+C2+1	3
60"		1+C3+1	3	1+C2+1	3	1+C2+1	3
66"		1+C3+1	3	1+C2+1	3	1+C2+1	3
72"		2+C3+2	3	1+C2+1	3	1+C2+1	3
74"		2+C3+2	3	1+C2+1	3	1+C2+1	3

TABLE KEY:

O	X
1+C2+1	3

← ANCHOR QUANTITY PER JAMB

HEAD AND SILL ANCHOR QUANTITIES
A CLUSTER OF (2) ANCHORS CENTERED ON THE MEETING RAIL PLUS (1) ANCHOR AT OPERABLE VENT AND FIXED SECTION. (4) ANCHORS TOTAL AT HEAD AND SILL.

(4" MIN. O.C. ANCHOR SPACING)

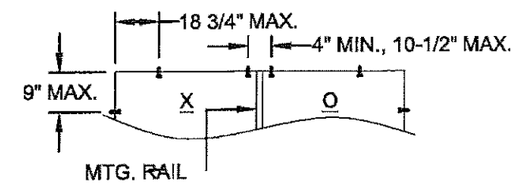

EXAMPLE CLUSTER W/ QTY. OF (2) ANCHORS
(SHOWN IN TABLE KEY ABOVE)

NOTES

1) WINDOW DP / ANCHOR QUANTITIES ARE BASED ON THE FOLLOWING DIMENSIONS:
HEAD & SILL: 10 1/2" MAX. ON EACH SIDE OF MEETING RAIL CENTERLINE. 18 3/4" MAX. FROM CORNERS.
JAMBS: 9" MAX. FROM CORNERS AND 22 1/2" MAX. O.C.

2) FOR WINDOW SIZES NOT SHOWN, GO TO NEXT LARGER WINDOW IN TABLE.

3) OVERALL FLANGE DIMENSIONS SHOWN. FOR FIN WINDOWS, SUBTRACT 1" FROM TABLE SIZE DIMENSIONS.

4) FOR INSTALLATION IN THE HVHZ ABOVE 30 FT, GLASS TYPES G - L SHALL HAVE A TEMPERED I.G. GLASS CAP. BOTH THE DP AND ANCHOR QUANTITY REMAIN UNCHANGED.

5) SEE GLASS TYPE DESCRIPTIONS ON SHEET 2.

PRODUCT REVISED
as complying with the Florida Building Code
NOA-No. 17-0411.06
Expiration Date 12/21/2021
By
Miami-Dade Product Control

Revision: 3/24/17: UPDATED TABLE & ELEVATION.

1070 TECHNOLOGY DRIVE
N. VENICE, FL 34275
(941) 480-1600

COPYRIGHT © 2017 PGT INDUSTRIES, INC.
ALL RIGHTS RESERVED

CERT. OF AUTH. #29296

Series	Detail	Title	Scale	Sheet	DWG No.	Drawn By	Date	Rev.
HR-710	ANCH. QTY., OX & XO	ALUM. HORIZONTAL ROLLER, IMPACT	NTS	9 OF 11	4127-10	JENS ROSOWSKI	03/22/06	H

ANTHONY LYNN MILLER
LICENSE
No. 58705
STATE OF FLORIDA
PROFESSIONAL ENGINEER
8/25/17

A. LYNN MILLER, P.E.
P.E.# 58705

TABLE 10:

Anchor Quantities, XOX, 1/3 - 1/3 - 1/3 with Glass Types A, B, C, G, H & I

Overall Width	Overall Height	Anchor Group A		Anchor Group B		Anchor Group C	
		Head & Sill	Jamb	Head & Sill	Jamb	Head & Sill	Jamb
48"	26"	1+C2+1+C2+1	2	1+C2+1+C2+1	2	1+C2+1+C2+1	2
53-1/8"		1+C2+1+C2+1	2	1+C2+1+C2+1	2	1+C2+1+C2+1	2
60"		1+C2+1+C2+1	2	1+C2+1+C2+1	2	1+C2+1+C2+1	2
66"		1+C2+1+C2+1	2	1+C2+1+C2+1	2	1+C2+1+C2+1	2
74"		1+C2+1+C2+1	2	1+C2+1+C2+1	2	1+C2+1+C2+1	2
84"		1+C2+1+C2+1	2	1+C2+1+C2+1	2	1+C2+1+C2+1	2
86-7/16"		1+C2+1+C2+1	2	1+C2+1+C2+1	2	1+C2+1+C2+1	2
48"	36"	1+C2+1+C2+1	2	1+C2+1+C2+1	2	1+C2+1+C2+1	2
53-1/8"		1+C2+1+C2+1	2	1+C2+1+C2+1	2	1+C2+1+C2+1	2
60"		1+C2+1+C2+1	2	1+C2+1+C2+1	2	1+C2+1+C2+1	2
66"		1+C2+1+C2+1	2	1+C2+1+C2+1	2	1+C2+1+C2+1	2
74"		1+C2+1+C2+1	2	1+C2+1+C2+1	2	1+C2+1+C2+1	2
84"		1+C2+1+C2+1	2	1+C2+1+C2+1	2	1+C2+1+C2+1	2
86-7/16"		1+C2+1+C2+1	2	1+C2+1+C2+1	2	1+C2+1+C2+1	2
48"	38-3/8"	1+C2+1+C2+1	2	1+C2+1+C2+1	2	1+C2+1+C2+1	2
53-1/8"		1+C2+1+C2+1	2	1+C2+1+C2+1	2	1+C2+1+C2+1	2
60"		1+C2+1+C2+1	2	1+C2+1+C2+1	2	1+C2+1+C2+1	2
66"		1+C2+1+C2+1	2	1+C2+1+C2+1	2	1+C2+1+C2+1	2
74"		1+C2+1+C2+1	2	1+C2+1+C2+1	2	1+C2+1+C2+1	2
84"		1+C2+1+C2+1	2	1+C2+1+C2+1	2	1+C2+1+C2+1	2
86-7/16"		1+C2+1+C2+1	2	1+C2+1+C2+1	2	1+C2+1+C2+1	2
48"	48"	1+C2+1+C2+1	3	1+C2+1+C2+1	3	1+C2+1+C2+1	3
53-1/8"		1+C2+1+C2+1	3	1+C2+1+C2+1	3	1+C2+1+C2+1	3
60"		1+C2+1+C2+1	3	1+C2+1+C2+1	3	1+C2+1+C2+1	3
66"		1+C2+1+C2+1	3	1+C2+1+C2+1	3	1+C2+1+C2+1	3
74"		1+C2+1+C2+1	3	1+C2+1+C2+1	3	1+C2+1+C2+1	3
84"		1+C2+1+C2+1	3	1+C2+1+C2+1	3	1+C2+1+C2+1	3
86-7/16"		1+C2+1+C2+1	3	1+C2+1+C2+1	3	1+C2+1+C2+1	3
48"	50-5/8"	1+C2+1+C2+1	3	1+C2+1+C2+1	3	1+C2+1+C2+1	3
53-1/8"		1+C2+1+C2+1	3	1+C2+1+C2+1	3	1+C2+1+C2+1	3
60"		1+C2+1+C2+1	3	1+C2+1+C2+1	3	1+C2+1+C2+1	3
66"		1+C2+1+C2+1	3	1+C2+1+C2+1	3	1+C2+1+C2+1	3
74"		1+C2+1+C2+1	3	1+C2+1+C2+1	3	1+C2+1+C2+1	3
84"		1+C2+1+C2+1	3	1+C2+1+C2+1	3	1+C2+1+C2+1	3
86-7/16"		1+C2+1+C2+1	3	1+C2+1+C2+1	3	1+C2+1+C2+1	3
48"	54"	1+C2+1+C2+1	3	1+C2+1+C2+1	3	1+C2+1+C2+1	3
53-1/8"		1+C2+1+C2+1	3	1+C2+1+C2+1	3	1+C2+1+C2+1	3
60"		1+C2+1+C2+1	3	1+C2+1+C2+1	3	1+C2+1+C2+1	3
66"		1+C2+1+C2+1	3	1+C2+1+C2+1	3	1+C2+1+C2+1	3
74"		1+C2+1+C2+1	3	1+C2+1+C2+1	3	1+C2+1+C2+1	3
84"		1+C2+1+C2+1	3	1+C2+1+C2+1	3	1+C2+1+C2+1	3
86-7/16"		1+C2+1+C2+1	3	1+C2+1+C2+1	3	1+C2+1+C2+1	3
48"	60"	1+C2+1+C2+1	3	1+C2+1+C2+1	3	1+C2+1+C2+1	3
53-1/8"		1+C2+1+C2+1	3	1+C2+1+C2+1	3	1+C2+1+C2+1	3
60"		1+C2+1+C2+1	3	1+C2+1+C2+1	3	1+C2+1+C2+1	3
66"		1+C2+1+C2+1	3	1+C2+1+C2+1	3	1+C2+1+C2+1	3
74"		1+C2+1+C2+1	3	1+C2+1+C2+1	3	1+C2+1+C2+1	3
84"		1+C2+1+C2+1	3	1+C2+1+C2+1	3	1+C2+1+C2+1	3
86-7/16"		1+C2+1+C2+1	3	1+C2+1+C2+1	3	1+C2+1+C2+1	3
48"	63"	1+C2+1+C2+1	3	1+C2+1+C2+1	3	1+C2+1+C2+1	3
53-1/8"		1+C2+1+C2+1	3	1+C2+1+C2+1	3	1+C2+1+C2+1	3
60"		1+C2+1+C2+1	3	1+C2+1+C2+1	3	1+C2+1+C2+1	3
66"		1+C2+1+C2+1	3	1+C2+1+C2+1	3	1+C2+1+C2+1	3
74"		1+C2+1+C2+1	3	1+C2+1+C2+1	3	1+C2+1+C2+1	3
84"		1+C2+1+C2+1	3	1+C2+1+C2+1	3	1+C2+1+C2+1	3
86-7/16"		1+C3+1+C3+1	3	1+C2+1+C2+1	3	1+C2+1+C2+1	3

TABLE 11:

Anchor Quantities, XOX, 1/3 - 1/3 - 1/3 with Glass Types D, E, F, J, K & L

Overall Width	Overall Height	Anchor Group A		Anchor Group B		Anchor Group C	
		Head & Sill	Jamb	Head & Sill	Jamb	Head & Sill	Jamb
48"	26"	1+C2+1+C2+1	2	1+C2+1+C2+1	2	1+C2+1+C2+1	2
53-1/8"		1+C2+1+C2+1	2	1+C2+1+C2+1	2	1+C2+1+C2+1	2
60"		1+C2+1+C2+1	2	1+C2+1+C2+1	2	1+C2+1+C2+1	2
66"		1+C2+1+C2+1	2	1+C2+1+C2+1	2	1+C2+1+C2+1	2
74"		1+C2+1+C2+1	2	1+C2+1+C2+1	2	1+C2+1+C2+1	2
84"		1+C2+1+C2+1	2	1+C2+1+C2+1	2	1+C2+1+C2+1	2
86-7/16"		1+C2+1+C2+1	2	1+C2+1+C2+1	2	1+C2+1+C2+1	2
48"	36"	1+C2+1+C2+1	2	1+C2+1+C2+1	2	1+C2+1+C2+1	2
53-1/8"		1+C2+1+C2+1	2	1+C2+1+C2+1	2	1+C2+1+C2+1	2
60"		1+C2+1+C2+1	2	1+C2+1+C2+1	2	1+C2+1+C2+1	2
66"		1+C2+1+C2+1	2	1+C2+1+C2+1	2	1+C2+1+C2+1	2
74"		1+C2+1+C2+1	2	1+C2+1+C2+1	2	1+C2+1+C2+1	2
84"		1+C2+1+C2+1	2	1+C2+1+C2+1	2	1+C2+1+C2+1	2
86-7/16"		1+C2+1+C2+1	2	1+C2+1+C2+1	2	1+C2+1+C2+1	2
48"	38-3/8"	1+C2+1+C2+1	2	1+C2+1+C2+1	2	1+C2+1+C2+1	2
53-1/8"		1+C2+1+C2+1	2	1+C2+1+C2+1	2	1+C2+1+C2+1	2
60"		1+C2+1+C2+1	2	1+C2+1+C2+1	2	1+C2+1+C2+1	2
66"		1+C2+1+C2+1	2	1+C2+1+C2+1	2	1+C2+1+C2+1	2
74"		1+C2+1+C2+1	2	1+C2+1+C2+1	2	1+C2+1+C2+1	2
84"		1+C2+1+C2+1	2	1+C2+1+C2+1	2	1+C2+1+C2+1	2
86-7/16"		1+C2+1+C2+1	2	1+C2+1+C2+1	2	1+C2+1+C2+1	2
48"	48"	1+C2+1+C2+1	3	1+C2+1+C2+1	3	1+C2+1+C2+1	3
53-1/8"		1+C2+1+C2+1	3	1+C2+1+C2+1	3	1+C2+1+C2+1	3
60"		1+C2+1+C2+1	3	1+C2+1+C2+1	3	1+C2+1+C2+1	3
66"		1+C2+1+C2+1	3	1+C2+1+C2+1	3	1+C2+1+C2+1	3
74"		1+C2+1+C2+1	3	1+C2+1+C2+1	3	1+C2+1+C2+1	3
84"		1+C2+1+C2+1	3	1+C2+1+C2+1	3	1+C2+1+C2+1	3
86-7/16"		1+C2+1+C2+1	3	1+C2+1+C2+1	3	1+C2+1+C2+1	3
48"	50-5/8"	1+C2+1+C2+1	3	1+C2+1+C2+1	3	1+C2+1+C2+1	3
53-1/8"		1+C2+1+C2+1	3	1+C2+1+C2+1	3	1+C2+1+C2+1	3
60"		1+C2+1+C2+1	3	1+C2+1+C2+1	3	1+C2+1+C2+1	3
66"		1+C2+1+C2+1	3	1+C2+1+C2+1	3	1+C2+1+C2+1	3
74"		1+C2+1+C2+1	3	1+C2+1+C2+1	3	1+C2+1+C2+1	3
84"		1+C2+1+C2+1	3	1+C2+1+C2+1	3	1+C2+1+C2+1	3
86-7/16"		1+C2+1+C2+1	3	1+C2+1+C2+1	3	1+C2+1+C2+1	3
48"	54"	1+C2+1+C2+1	3	1+C2+1+C2+1	3	1+C2+1+C2+1	3
53-1/8"		1+C2+1+C2+1	3	1+C2+1+C2+1	3	1+C2+1+C2+1	3
60"		1+C2+1+C2+1	3	1+C2+1+C2+1	3	1+C2+1+C2+1	3
66"		1+C2+1+C2+1	3	1+C2+1+C2+1	3	1+C2+1+C2+1	3
74"		1+C2+1+C2+1	3	1+C2+1+C2+1	3	1+C2+1+C2+1	3
84"		1+C3+1+C3+1	3	1+C2+1+C2+1	3	1+C2+1+C2+1	3
86-7/16"		1+C3+1+C3+1	3	1+C2+1+C2+1	3	1+C2+1+C2+1	3
48"	60"	1+C2+1+C2+1	3	1+C2+1+C2+1	3	1+C2+1+C2+1	3
53-1/8"		1+C2+1+C2+1	3	1+C2+1+C2+1	3	1+C2+1+C2+1	3
60"		1+C2+1+C2+1	3	1+C2+1+C2+1	3	1+C2+1+C2+1	3
66"		1+C2+1+C2+1	3	1+C2+1+C2+1	3	1+C2+1+C2+1	3
74"		1+C3+1+C3+1	3	1+C2+1+C2+1	3	1+C2+1+C2+1	3
84"		1+C3+1+C3+1	3	1+C2+1+C2+1	3	1+C2+1+C2+1	3
86-7/16"		1+C3+1+C3+1	3	1+C2+1+C2+1	3	1+C2+1+C2+1	3
48"	63"	1+C2+1+C2+1	3	1+C2+1+C2+1	3	1+C2+1+C2+1	3
53-1/8"		1+C2+1+C2+1	3	1+C2+1+C2+1	3	1+C2+1+C2+1	3
60"		1+C2+1+C2+1	3	1+C2+1+C2+1	3	1+C2+1+C2+1	3
66"		1+C3+1+C3+1	3	1+C2+1+C2+1	3	1+C2+1+C2+1	3
74"		1+C3+1+C3+1	3	1+C2+1+C2+1	3	1+C2+1+C2+1	3
84"		1+C3+1+C3+1	3	1+C2+1+C2+1	3	1+C2+1+C2+1	3
86-7/16"		1+C3+1+C3+1	3	1+C2+1+C2+1	3	1+C2+1+C2+1	3

TABLE KEY:

X O X

1+C3+1+C3+1 | 3 ← ANCHOR QUANTITY PER JAMB

HEAD AND SILL ANCHOR QUANTITIES
A CLUSTER OF (3) ANCHORS CENTERED ON EACH MEETING RAIL PLUS (1) ANCHOR AT EACH OPERABLE VENT PLUS (1) ANCHORS AT FIXED SECTION. (9) ANCHORS TOTAL AT HEAD AND SILL.

(4" MIN. O.C. ANCHOR SPACING)

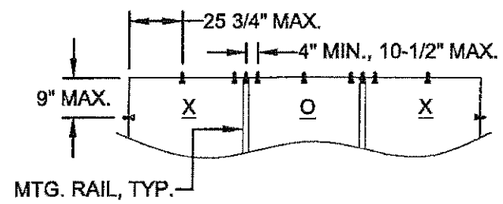

EXAMPLE CLUSTER W/ QTY. OF (3) ANCHORS
(SHOWN IN TABLE KEY ABOVE)

NOTES

1) WINDOW DP / ANCHOR QUANTITIES ARE BASED ON THE FOLLOWING DIMENSIONS:
HEAD & SILL: 10 1/2" MAX. ON EACH SIDE OF MEETING RAIL CENTERLINE.
25 3/4" MAX. FROM CORNERS.
JAMBS: 9" MAX. FROM CORNERS AND 22 1/2" MAX. O.C.

2) FOR WINDOW SIZES NOT SHOWN, GO TO NEXT LARGER WINDOW IN TABLE.

3) OVERALL FLANGE DIMENSIONS SHOWN. FOR FIN WINDOWS, SUBTRACT 1" FROM TABLE SIZE DIMENSIONS.

4) FOR INSTALLATION IN THE HVHZ ABOVE 30 FT, GLASS TYPES G - L SHALL HAVE A TEMPERED I.G. GLASS CAP. BOTH THE DP AND ANCHOR QUANTITY REMAIN UNCHANGED.

5) SEE GLASS TYPE DESCRIPTIONS ON SHEET 2.

PRODUCT REVISED
as complying with the Florida Building Code
NOA-No. 17-0411.06
Expiration Date 12/21/2021
By
Miami-Dade Product Control

Revision: 3/24/17: UPDATED TABLE & ELEVATION.

PGT®
1070 TECHNOLOGY DRIVE
N. VENICE, FL 34275
(941) 480-1600
CERT. OF AUTH. #29296

COPYRIGHT © 2017 PGT INDUSTRIES, INC.
ALL RIGHTS RESERVED

Title	ALUM. HORIZONTAL ROLLER, IMPACT
Desc.	ANCH. QTY., XOX-1/3-1/3-1/3
Drawn By	JENS ROSOWSKI
Date	03/22/06
DWG No.	4127-10
Sheet	10 OF 11
Scale	NTS
Series	HR-710
Rev.	H

ANTHONY LYNN MILLER
LICENSE
No. 58705
8/23/17
STATE OF FLORIDA
PROFESSIONAL ENGINEER

A. LYNN MILLER, P.E.
P.E.# 58705

TABLE 12:

Anchor Quantities, XOX, 1/4 - 1/2 - 1/4 with Glass Types A, B, C, G, H & I

Overall Width	Overall Height	Anchor Group A		Anchor Group B		Anchor Group C	
		Head & Sill	Jamb	Head & Sill	Jamb	Head & Sill	Jamb
53-1/8"	26"	1+C2+1+C2+1	2	1+C2+1+C2+1	2	1+C2+1+C2+1	2
60"		1+C2+1+C2+1	2	1+C2+1+C2+1	2	1+C2+1+C2+1	2
74"		1+C2+1+C2+1	2	1+C2+1+C2+1	2	1+C2+1+C2+1	2
84"		1+C2+2+C2+1	2	1+C2+1+C2+1	2	1+C2+1+C2+1	2
96"		1+C2+2+C2+1	2	1+C2+1+C2+1	2	1+C2+1+C2+1	2
106-3/8"		1+C2+2+C2+1	2	1+C2+1+C2+1	2	1+C2+1+C2+1	2
108"		1+C2+2+C2+1	2	1+C2+1+C2+1	2	1+C2+1+C2+1	2
111"		1+C2+2+C2+1	2	1+C2+1+C2+1	2	1+C2+1+C2+1	2
53-1/8"	36"	1+C2+1+C2+1	2	1+C2+1+C2+1	2	1+C2+1+C2+1	2
60"		1+C2+1+C2+1	2	1+C2+1+C2+1	2	1+C2+1+C2+1	2
74"		1+C2+1+C2+1	2	1+C2+1+C2+1	2	1+C2+1+C2+1	2
84"		1+C2+2+C2+1	2	1+C2+1+C2+1	2	1+C2+1+C2+1	2
96"		1+C2+2+C2+1	2	1+C2+1+C2+1	2	1+C2+1+C2+1	2
106-3/8"		1+C2+2+C2+1	2	1+C2+2+C2+1	2	1+C2+1+C2+1	2
108"		1+C2+2+C2+1	2	1+C2+2+C2+1	2	1+C2+1+C2+1	2
111"		1+C2+2+C2+1	2	1+C2+2+C2+1	2	1+C2+1+C2+1	2
53-1/8"	38-3/8"	1+C2+1+C2+1	2	1+C2+1+C2+1	2	1+C2+1+C2+1	2
60"		1+C2+1+C2+1	2	1+C2+1+C2+1	2	1+C2+1+C2+1	2
74"		1+C2+1+C2+1	2	1+C2+1+C2+1	2	1+C2+1+C2+1	2
84"		1+C2+2+C2+1	2	1+C2+1+C2+1	2	1+C2+1+C2+1	2
96"		1+C2+2+C2+1	2	1+C2+1+C2+1	2	1+C2+1+C2+1	2
106-3/8"		1+C2+2+C2+1	2	1+C2+2+C2+1	2	1+C2+1+C2+1	2
108"		1+C2+2+C2+1	2	1+C2+2+C2+1	2	1+C2+1+C2+1	2
111"		1+C2+2+C2+1	2	1+C2+2+C2+1	2	1+C2+1+C2+1	2
53-1/8"	48"	1+C2+1+C2+1	3	1+C2+1+C2+1	3	1+C2+1+C2+1	3
60"		1+C2+1+C2+1	3	1+C2+1+C2+1	3	1+C2+1+C2+1	3
74"		1+C2+1+C2+1	3	1+C2+1+C2+1	3	1+C2+1+C2+1	3
84"		1+C2+2+C2+1	3	1+C2+1+C2+1	3	1+C2+1+C2+1	3
96"		1+C2+2+C2+1	3	1+C2+2+C2+1	3	1+C2+1+C2+1	3
106-3/8"		1+C2+3+C2+1	3	1+C2+2+C2+1	3	1+C2+1+C2+1	3
108"		1+C2+3+C2+1	3	1+C2+2+C2+1	3	1+C2+1+C2+1	3
111"		1+C2+3+C2+1	3	1+C2+2+C2+1	3	1+C2+1+C2+1	3
53-1/8"	50-5/8"	1+C2+1+C2+1	3	1+C2+1+C2+1	3	1+C2+1+C2+1	3
60"		1+C2+1+C2+1	3	1+C2+1+C2+1	3	1+C2+1+C2+1	3
74"		1+C2+1+C2+1	3	1+C2+1+C2+1	3	1+C2+1+C2+1	3
84"		1+C2+2+C2+1	3	1+C2+1+C2+1	3	1+C2+1+C2+1	3
96"		1+C2+2+C2+1	3	1+C2+2+C2+1	3	1+C2+1+C2+1	3
106-3/8"		1+C2+3+C2+1	3	1+C2+2+C2+1	3	1+C2+1+C2+1	3
108"		1+C2+3+C2+1	3	1+C2+2+C2+1	3	1+C2+1+C2+1	3
111"		1+C2+3+C2+1	3	1+C2+2+C2+1	3	1+C2+2+C2+1	3
53-1/8"	54"	1+C2+1+C2+1	3	1+C2+1+C2+1	3	1+C2+1+C2+1	3
60"		1+C2+1+C2+1	3	1+C2+1+C2+1	3	1+C2+1+C2+1	3
74"		1+C2+1+C2+1	3	1+C2+1+C2+1	3	1+C2+1+C2+1	3
84"		1+C2+2+C2+1	3	1+C2+1+C2+1	3	1+C2+1+C2+1	3
96"		1+C2+2+C2+1	3	1+C2+2+C2+1	3	1+C2+1+C2+1	3
106-3/8"		1+C2+3+C2+1	3	1+C2+2+C2+1	3	1+C2+1+C2+1	3
108"		1+C2+3+C2+1	3	1+C2+2+C2+1	3	1+C2+1+C2+1	3
111"		1+C2+3+C2+1	3	1+C2+2+C2+1	3	1+C2+2+C2+1	3
53-1/8"	60"	1+C2+1+C2+1	3	1+C2+1+C2+1	3	1+C2+1+C2+1	3
60"		1+C2+1+C2+1	3	1+C2+1+C2+1	3	1+C2+1+C2+1	3
74"		1+C2+1+C2+1	3	1+C2+1+C2+1	3	1+C2+1+C2+1	3
84"		1+C2+2+C2+1	3	1+C2+1+C2+1	3	1+C2+1+C2+1	3
96"		1+C3+2+C3+1	3	1+C2+2+C2+1	3	1+C2+1+C2+1	3
106-3/8"		1+C3+3+C3+1	3	1+C2+2+C2+1	3	1+C2+1+C2+1	3
108"		1+C3+3+C3+1	3	1+C2+2+C2+1	3	1+C2+1+C2+1	3
111"		1+C3+3+C3+1	3	1+C2+2+C2+1	3	1+C2+2+C2+1	3
53-1/8"	63"	1+C2+1+C2+1	3	1+C2+1+C2+1	3	1+C2+1+C2+1	3
60"		1+C2+1+C2+1	3	1+C2+1+C2+1	3	1+C2+1+C2+1	3
74"		1+C2+1+C2+1	3	1+C2+1+C2+1	3	1+C2+1+C2+1	3
84"		1+C3+2+C3+1	3	1+C2+1+C2+1	3	1+C2+1+C2+1	3
96"		1+C3+2+C3+1	3	1+C2+2+C2+1	3	1+C2+1+C2+1	3
106-3/8"		1+C3+3+C3+1	3	1+C2+2+C2+1	3	1+C2+1+C2+1	3
108"		1+C3+3+C3+1	3	1+C2+2+C2+1	3	1+C2+1+C2+1	3
111"		1+C3+3+C3+1	3	1+C2+2+C2+1	3	1+C2+2+C2+1	3

TABLE 13:

Anchor Quantities, XOX, 1/4 - 1/2 - 1/4 with Glass Types D, E, F, J, K & L

Overall Width	Overall Height	Anchor Group A		Anchor Group B		Anchor Group C	
		Head & Sill	Jamb	Head & Sill	Jamb	Head & Sill	Jamb
53-1/8"	26"	1+C2+1+C2+1	2	1+C2+1+C2+1	2	1+C2+1+C2+1	2
60"		1+C2+1+C2+1	2	1+C2+1+C2+1	2	1+C2+1+C2+1	2
74"		1+C2+2+C2+1	2	1+C2+1+C2+1	2	1+C2+1+C2+1	2
84"		1+C2+2+C2+1	2	1+C2+1+C2+1	2	1+C2+1+C2+1	2
96"		1+C2+2+C2+1	2	1+C2+2+C2+1	2	1+C2+1+C2+1	2
106-3/8"		1+C2+2+C2+1	2	1+C2+2+C2+1	2	1+C2+1+C2+1	2
108"		1+C2+2+C2+1	2	1+C2+2+C2+1	2	1+C2+1+C2+1	2
111"		1+C2+2+C2+1	2	1+C2+2+C2+1	2	1+C2+1+C2+1	2
53-1/8"	36"	1+C2+1+C2+1	2	1+C2+1+C2+1	2	1+C2+1+C2+1	2
60"		1+C2+1+C2+1	2	1+C2+1+C2+1	2	1+C2+1+C2+1	2
74"		1+C2+2+C2+1	2	1+C2+1+C2+1	2	1+C2+1+C2+1	2
84"		1+C2+2+C2+1	2	1+C2+1+C2+1	2	1+C2+1+C2+1	2
96"		1+C2+2+C2+1	2	1+C2+2+C2+1	2	1+C2+1+C2+1	2
106-3/8"		1+C2+3+C2+1	2	1+C2+2+C2+1	2	1+C2+2+C2+1	2
108"		1+C2+3+C2+1	2	1+C2+2+C2+1	2	1+C2+2+C2+1	2
111"		1+C2+3+C2+1	2	1+C2+2+C2+1	2	1+C2+2+C2+1	2
53-1/8"	38-3/8"	1+C2+1+C2+1	2	1+C2+1+C2+1	2	1+C2+1+C2+1	2
60"		1+C2+1+C2+1	2	1+C2+1+C2+1	2	1+C2+1+C2+1	2
74"		1+C2+2+C2+1	2	1+C2+1+C2+1	2	1+C2+1+C2+1	2
84"		1+C2+2+C2+1	2	1+C2+1+C2+1	2	1+C2+1+C2+1	2
96"		1+C2+2+C2+1	2	1+C2+2+C2+1	2	1+C2+1+C2+1	2
106-3/8"		1+C2+3+C2+1	2	1+C2+2+C2+1	2	1+C2+2+C2+1	2
108"		1+C2+3+C2+1	2	1+C2+2+C2+1	2	1+C2+2+C2+1	2
111"		1+C2+3+C2+1	2	1+C2+2+C2+1	2	1+C2+2+C2+1	2
53-1/8"	48"	1+C2+1+C2+1	3	1+C2+1+C2+1	3	1+C2+1+C2+1	3
60"		1+C2+1+C2+1	3	1+C2+1+C2+1	3	1+C2+1+C2+1	3
74"		1+C2+2+C2+1	3	1+C2+1+C2+1	3	1+C2+1+C2+1	3
84"		1+C2+2+C2+1	3	1+C2+1+C2+1	3	1+C2+1+C2+1	3
96"		1+C2+3+C2+1	3	1+C2+2+C2+1	3	1+C2+1+C2+1	3
106-3/8"		1+C2+3+C2+1	3	1+C2+2+C2+1	3	1+C2+2+C2+1	3
108"		1+C2+3+C2+1	3	1+C2+2+C2+1	3	1+C2+2+C2+1	3
111"		1+C2+3+C2+1	3	1+C2+2+C2+1	3	1+C2+2+C2+1	3
53-1/8"	50-5/8"	1+C2+1+C2+1	3	1+C2+1+C2+1	3	1+C2+1+C2+1	3
60"		1+C2+1+C2+1	3	1+C2+1+C2+1	3	1+C2+1+C2+1	3
74"		1+C2+2+C2+1	3	1+C2+1+C2+1	3	1+C2+1+C2+1	3
84"		1+C2+2+C2+1	3	1+C2+1+C2+1	3	1+C2+1+C2+1	3
96"		1+C2+3+C2+1	3	1+C2+2+C2+1	3	1+C2+1+C2+1	3
106-3/8"		1+C3+3+C3+1	3	1+C2+2+C2+1	3	1+C2+2+C2+1	3
108"		1+C3+3+C3+1	3	1+C2+2+C2+1	3	1+C2+2+C2+1	3
111"		1+C3+3+C3+1	3	1+C2+2+C2+1	3	1+C2+2+C2+1	3
53-1/8"	54"	1+C2+1+C2+1	3	1+C2+1+C2+1	3	1+C2+1+C2+1	3
60"		1+C2+1+C2+1	3	1+C2+1+C2+1	3	1+C2+1+C2+1	3
74"		1+C2+2+C2+1	3	1+C2+1+C2+1	3	1+C2+1+C2+1	3
84"		1+C3+2+C3+1	3	1+C2+1+C2+1	3	1+C2+1+C2+1	3
96"		1+C3+3+C3+1	3	1+C2+2+C2+1	3	1+C2+1+C2+1	3
106-3/8"		1+C3+3+C3+1	3	1+C2+2+C2+1	3	1+C2+2+C2+1	3
108"		1+C3+3+C3+1	3	1+C2+2+C2+1	3	1+C2+2+C2+1	3
111"		1+C3+3+C3+1	3	1+C2+2+C2+1	3	1+C2+2+C2+1	3
53-1/8"	60"	1+C2+1+C2+1	3	1+C2+1+C2+1	3	1+C2+1+C2+1	3
60"		1+C2+1+C2+1	3	1+C2+1+C2+1	3	1+C2+1+C2+1	3
74"		1+C3+2+C3+1	3	1+C2+1+C2+1	3	1+C2+1+C2+1	3
84"		1+C3+2+C3+1	3	1+C2+1+C2+1	3	1+C2+1+C2+1	3
96"		1+C3+3+C3+1	3	1+C2+2+C2+1	3	1+C2+1+C2+1	3
106-3/8"		1+C3+3+C3+1	3	1+C2+2+C2+1	3	1+C2+2+C2+1	3
108"		1+C3+3+C3+1	3	1+C2+2+C2+1	3	1+C2+2+C2+1	3
111"		1+C3+3+C3+1	3	1+C2+2+C2+1	3	1+C2+2+C2+1	3
53-1/8"	63"	1+C2+1+C2+1	3	1+C2+1+C2+1	3	1+C2+1+C2+1	3
60"		1+C3+1+C3+1	3	1+C2+1+C2+1	3	1+C2+1+C2+1	3
74"		1+C3+2+C3+1	3	1+C2+1+C2+1	3	1+C2+1+C2+1	3
84"		1+C3+2+C3+1	3	1+C2+1+C2+1	3	1+C2+1+C2+1	3
96"		1+C3+3+C3+1	3	1+C2+2+C2+1	3	1+C2+1+C2+1	3
106-3/8"		1+C3+3+C3+1	3	1+C2+2+C2+1	3	1+C2+2+C2+1	3
108"		1+C3+3+C3+1	3	1+C2+2+C2+1	3	1+C2+2+C2+1	3
111"		1+C3+3+C3+1	3	1+C2+2+C2+1	3	1+C2+2+C2+1	3

TABLE KEY:

X O X

1+C2+2+C2+1 | 3 ← ANCHOR QUANTITY PER JAMB

HEAD AND SILL ANCHOR QUANTITIES
A CLUSTER OF (2) ANCHORS CENTERED ON EACH MEETING RAIL PLUS (1) ANCHOR AT EACH OPERABLE VENT PLUS (2) ANCHORS AT FIXED SECTION. (8) ANCHORS TOTAL AT HEAD AND SILL.

(4" MIN. O.C. ANCHOR SPACING)

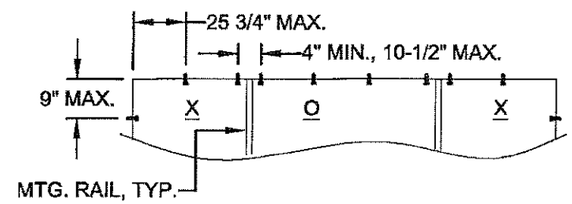

EXAMPLE CLUSTER W/ QTY. OF (2) ANCHORS

(SHOWN IN TABLE KEY ABOVE)

NOTES

1) WINDOW DP / ANCHOR QUANTITIES ARE BASED ON THE FOLLOWING DIMENSIONS:
HEAD & SILL: 10 1/2" MAX. ON EACH SIDE OF MEETING RAIL CENTERLINE.
25 3/4" MAX. FROM CORNERS.
JAMBS: 9" MAX. FROM CORNERS AND 22 1/2" MAX. O.C.

2) FOR WINDOW SIZES NOT SHOWN, GO TO NEXT LARGER WINDOW IN TABLE.

3) OVERALL FLANGE DIMENSIONS SHOWN. FOR FIN WINDOWS, SUBTRACT 1" FROM TABLE SIZE DIMENSIONS.

4) FOR INSTALLATION IN THE HVHZ ABOVE 30 FT, GLASS TYPES G - L SHALL HAVE A TEMPERED I.G. GLASS CAP. BOTH THE DP AND ANCHOR QUANTITY REMAIN UNCHANGED.

5) SEE GLASS TYPE DESCRIPTIONS ON SHEET 2.

PRODUCT REVISED
as complying with the Florida Building Code
NOA-No. 17-0411.06
Expiration Date 12/21/2021
By
Miami-Dade Product Control

Revision: 3/24/17: UPDATED TABLE & ELEVATION.

1070 TECHNOLOGY DRIVE
N. VENICE, FL 34275
(941) 480-1600

COPYRIGHT © 2017 PGT INDUSTRIES, INC. ALL RIGHTS RESERVED

PGT®
CERT. OF AUTH. #28296

Date	03/22/06
Drawn By	JENS ROSOWSKI
DWG No.	4127-10
Rev.	H
Title	ALUM. HORIZONTAL ROLLER, IMPACT
Sheet	11 OF 11
Desc.	ANCH. QTY., XOX-1/4-1/2-1/4
Scale	NTS
Series	HR-710

ANTHONY LYNN MILLER
LICENSE
No. 58705
STATE OF FLORIDA
PROFESSIONAL ENGINEER
8/23/17

A. LYNN MILLER, P.E.
P.E.# 58705