MIAMI-DADE COUNTY
DEPARTMENT OF REGULATORY AND ECONOMIC RESOURCES (RER)
BOARD AND CODE ADMINISTRATION DIVISION

MIAMI-DADE COUNTY
PRODUCT CONTROL SECTION
11805 SW 26 Street, Room 208
T (786) 315-2590 F (786) 315-2599
www.miamidade.gov/economy

NOTICE OF ACCEPTANCE (NOA)

New Age Windows & Doors Corp.
7196 NW 77 Terrace
Medley, FL 33166

SCOPE:

This NOA is being issued under the applicable rules and regulations governing the use of construction materials. The documentation submitted has been reviewed and accepted by Miami-Dade County RER - Product Control Section to be used in Miami Dade County and other areas where allowed by the Authority Having Jurisdiction (AHJ).

This NOA shall not be valid after the expiration date stated below. The Miami-Dade County Product Control Section (In Miami Dade County) and/or the AHJ (in areas other than Miami Dade County) reserve the right to have this product or material tested for quality assurance purposes. If this product or material fails to perform in the accepted manner, the manufacturer will incur the expense of such testing and the AHJ may immediately revoke, modify, or suspend the use of such product or material within their jurisdiction. RER reserves the right to revoke this acceptance, if it is determined by Miami-Dade County Product Control Section that this product or material fails to meet the requirements of the applicable building code.

This product is approved as described herein, and has been designed to comply with the Florida Building Code, including the High Velocity Hurricane Zone.

DESCRIPTION: Series "100" Aluminum Single Hung Window - N.I.

APPROVAL DOCUMENT: Drawing No. **W95-45**, titled "Series 100 Aluminum Single Hung Wdw. (N.I.)", sheets 1 through 4 of 4, dated 10/17/95, with revision I dated 06/12/17, prepared by Al-Farooq Corporation, signed and sealed by Javad Ahmad, P.E., bearing the Miami-Dade County Product Control Revision stamp with the Notice of Acceptance number and expiration date by the Miami-Dade County Product Control Section.

MISSILE IMPACT RATING: None

LABELING: Each unit shall bear a permanent label with the manufacturer's name or logo, city, state, model/series, and following statement: "Miami-Dade County Product Control Approved", unless otherwise noted herein.

RENEWAL of this NOA shall be considered after a renewal application has been filed and there has been no change in the applicable building code negatively affecting the performance of this product.

TERMINATION of this NOA will occur after the expiration date or if there has been a revision or change in the materials, use, and/or manufacture of the product or process. Misuse of this NOA as an endorsement of any product, for sales, advertising or any other purposes shall automatically terminate this NOA. Failure to comply with any section of this NOA shall be cause for termination and removal of NOA.

ADVERTISEMENT: The NOA number preceded by the words Miami-Dade County, Florida, and followed by the expiration date may be displayed in advertising literature. If any portion of the NOA is displayed, then it shall be done in its entirety.

INSPECTION: A copy of this entire NOA shall be provided to the user by the manufacturer or its distributors and shall be available for inspection at the job site at the request of the Building Official.

This NOA revises and **renews NOA# 14-0822.07** and consists of this page 1 and evidence pages E-1 and E-2, as well as approval document mentioned above.

The submitted documentation was reviewed by **Jorge M. Plasencia, P.E.**

MIAMI-DADE COUNTY APPROVED

7/13/2017

New Age Windows & Doors Corp.

NOTICE OF ACCEPTANCE: EVIDENCE SUBMITTED

A. DRAWINGS

1. Manufacturer's die drawings and sections.
2. Drawing No. **W95-45**, titled "Series 100 Aluminum Single Hung Wdw. (N.I.)", sheets 1 through 4 of 4, dated 10/17/95, with revision I dated 06/12/17, prepared by Al-Farooq Corporation, signed and sealed by Javad Ahmad, P.E.

B. TESTS

1. Test reports on: 1) Air Infiltration Test, FBC, TAS 202-94
   2) Uniform Static Air Pressure Test, FBC, TAS 202-94
   3) Water Resistance Test, FBC, TAS 202-94
   4) Forced Entry Test, FBC, TAS 202-94

   along with marked-up drawings and installation diagram of an aluminum single hung window, prepared by Fenestration Testing Laboratory, Inc., Test Report No. **FTL-6794** dated 03/26/12, signed and sealed by Marlin D. Brinson, P.E.
   (Submitted under NOA# 12-0419.03)
2. Test reports on: 1) Air Infiltration Test, FBC, TAS 202-94
   2) Uniform Static Air Pressure Test, FBC, TAS 202-94
   3) Water Resistance Test, FBC, TAS 202-94
   4) Forced Entry Test, FBC, TAS 202-94

   along with marked-up drawings and installation diagram of an aluminum single hung window, prepared by Fenestration Testing Laboratory, Inc., Test Report No. **FTL-5219** dated 05/30/07, signed and sealed by Michael Wenzel, P.E.
   (Submitted under NOA# 07-0919.01)
3. Test reports on: 1) Air Infiltration Test, FBC, TAS 202-94
   2) Uniform Static Air Pressure Test, FBC, TAS 202-94
   3) Water Resistance Test, FBC, TAS 202-94
   4) Forced Entry Test, FBC, TAS 202-94

   along with marked-up drawings and installation diagram of an aluminum single hung window, prepared by Fenestration Testing Laboratory, Inc., Test Report No. **FTL-1804** dated 12/22/97, and addendum letter dated 09/28/98, all signed and sealed by Gilbert Diamond, P.E.
   (Submitted under NOA# 02-0801.02)

C. CALCULATIONS

1. Anchor verification calculations and structural analysis, complying with **FBC 5th Edition (2014) and FBC 6th Edition (2017),** dated on 06/09/17, prepared by Al-Farooq Corporation, signed and sealed by Javad Ahmad, P.E.
2. Glazing complies with **ASTM E1300-09.**

Jorge M. Plasencia, P.E.
Product Control Unit Supervisor
NOA No. 17-0413.03
Expiration Date: September 26, 2022
Approval Date: July 20, 2017

NOTICE OF ACCEPTANCE: EVIDENCE SUBMITTED

D. QUALITY ASSURANCE

1. Miami-Dade Department of Regulatory and Economic Resources (RER)

E. MATERIAL CERTIFICATIONS

1. None.

F. STATEMENTS

1. Statement letter of conformance, complying with **FBC–6th Edition (2017)**, dated 06/27/17, prepared by Al-Farooq Corporation, signed and sealed by Javad Ahmad, P.E.
2. Statement letter of conformance, complying with **FBC–5th Edition (2014)**, dated 06/12/17, prepared by Al-Farooq Corporation, signed and sealed by Javad Ahmad, P.E.
3. Statement letter of no financial interest, dated 06/12/17, prepared by Al-Farooq Corporation, signed and sealed by Javad Ahmad, P.E.

G. OTHERS

1. Notice of Acceptance No. **14-0822.07**, issued to New Age Windows & Doors Corporation for their Series "100" Aluminum Single Hung Window – N.I., approved on 12/04/14 and expiring on 09/26/17.

Jorge M. Plasencia, P.E.
Product Control Unit Supervisor
NOA No. 17-0413.03
Expiration Date: September 26, 2022
Approval Date: July 20, 2017

DESIGN LOAD CAPACITY – PSF ANCHORS TYPE 'A'			
WINDOW DIMS.		3/16" ANN. GLASS	
WIDTH	HEIGHT	EXT.(+)	INT.(–)
19–1/8"	26" (3)	66.7	125.0
26–1/2"		66.7	125.0
32"		66.7	125.0
37"		66.7	125.0
42"		66.7	112.3
48"		66.7	94.9
53–1/8"		66.7	83.8
19–1/8"	38–3/8" (4)	66.7	125.0
26–1/2"		66.7	125.0
32"		66.7	119.8
37"		66.7	101.1
42"		66.7	84.0
48"		66.7	69.9
53–1/8"		61.1	61.1
19–1/8"	50–5/8" (5)	66.7	125.0
26–1/2"		66.7	120.6
32"		66.7	105.7
37"		66.7	87.5
42"		66.7	71.0
48"		57.9	57.9
53–1/8"		50.1	50.1
19–1/8"	56" (6)	66.7	125.0
26–1/2"		66.7	125.0
32"		66.7	111.4
37"		66.7	84.3
42"		66.7	67.6
48"		54.6	54.6
53–1/8"		46.9	46.9
19–1/8"	63" (6)	66.7	125.0
26–1/2"		66.7	108.8
32"		66.7	95.4
37"		66.7	82.0
42"		64.6	64.6
48"		51.4	51.4
53–1/8"		43.8	43.8
19–1/8"	74–1/4" (7)	66.7	125.0
26–1/2"		66.7	103.5
32"		66.7	89.8
37"		66.7	80.9
42"		62.2	62.2
48"		48.3	48.3
53–1/8"		40.5	40.5

( ) NO. IN PARENTHESIS INDICATE NO. OF ANCHORS PER JAMB

DESIGN LOAD CAPACITY – PSF ANCHORS TYPE 'B'			
WINDOW DIMS.		3/16" ANN. GLASS	
WIDTH	HEIGHT	EXT.(+)	INT.(–)
19–1/8"	26" (3)	66.7	125.0
26–1/2"		66.7	125.0
32"		66.7	125.0
37"		66.7	125.0
42"		66.7	125.0
48"		66.7	118.9
53–1/8"		66.7	105.8
19–1/8"	38–3/8" (4)	66.7	125.0
26–1/2"		66.7	125.0
32"		66.7	125.0
37"		66.7	122.0
42"		66.7	103.2
48"		66.7	87.1
53–1/8"		66.7	76.8
19–1/8"	50–5/8" (5)	66.7	125.0
26–1/2"		66.7	125.0
32"		66.7	125.0
37"		66.7	104.1
42"		66.7	86.4
48"		66.7	71.7
53–1/8"		62.6	62.6
19–1/8"	56" (6)	66.7	125.0
26–1/2"		66.7	125.0
32"		66.7	124.2
37"		66.7	99.6
42"		66.7	81.8
48"		66.7	67.4
53–1/8"		58.6	58.6
19–1/8"	63" (6)	66.7	125.0
26–1/2"		66.7	125.0
32"		66.7	108.4
37"		66.7	95.8
42"		66.7	77.6
48"		63.2	63.2
53–1/8"		54.5	54.5
19–1/8"	74–1/4" (7)	66.7	125.0
26–1/2"		66.7	111.5
32"		66.7	94.3
37"		66.7	80.9
42"		66.7	73.7
48"		58.7	58.7
53–1/8"		50.0	50.0

( ) NO. IN PARENTHESIS INDICATE NO. OF ANCHORS PER JAMB

NOTE:
GLASS CAPACITIES ON THIS SHEET ARE BASED ON ASTM E1300–09 (3 SEC. GUSTS) AND FLORIDA BUILDING COMMISSION DECLARATORY STATEMENT DCA05–DEC–219

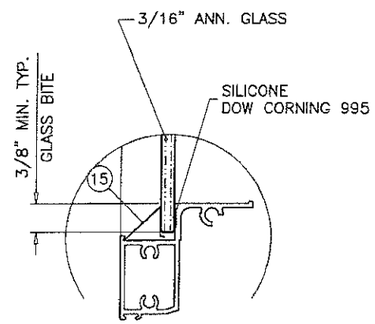

TYP. GLAZING DETAIL

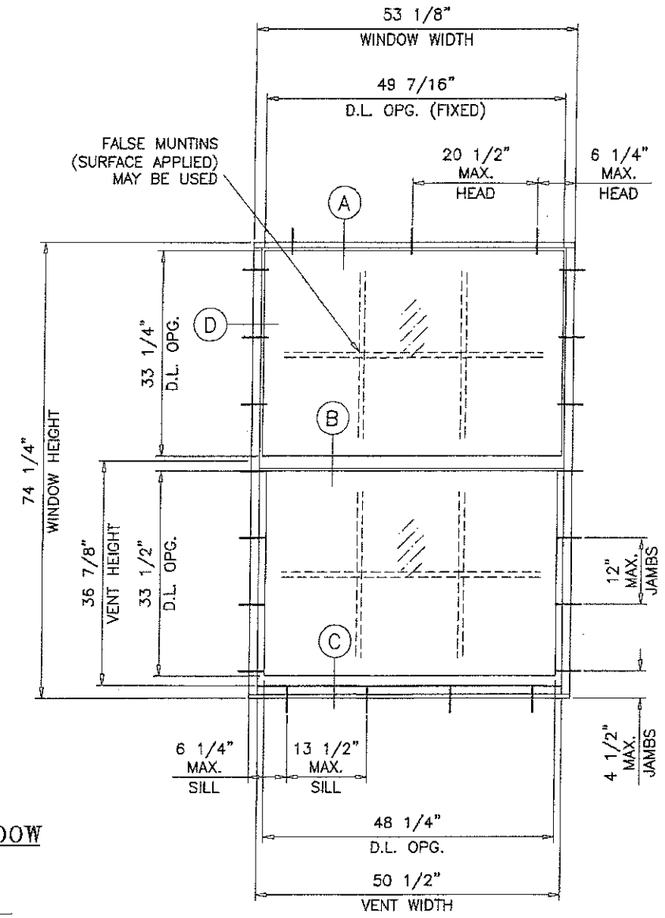

TYPICAL ELEVATION

SERIES 100 ALUMINUM SINGLE HUNG WINDOW

DESIGN LOAD RATINGS FOR THESE WINDOWS TO BE AS PER CHARTS SHOWN.

APPROVAL APPLIES TO SINGLE UNITS OR SIDE BY SIDE COMBINATIONS OF S.H./S.H. OR SINGLE HUNG WITH OTHER WINDOW TYPES IN MODULES OF TWO OR MORE WINDOWS USING MIAMI–DADE COUNTY APPROVED MULLIONS IN BETWEEN. LOWER DESIGN PRESSURE FROM WINDOWS OR MULLION APPROVAL WILL APPLY TO ENTIRE SYSTEM.

THIS PRODUCT HAS BEEN DESIGNED AND TESTED TO COMPLY WITH THE REQUIREMENTS OF THE 2014 (5TH EDITION)/2017 (6TH EDITION) FLORIDA BUILDING CODE INCLUDING HIGH VELOCITY HURRICANE ZONE (HVHZ).

1BY OR 2BY WOOD BUCKS & BUCK FASTENERS BY OTHERS, MUST BE DESIGNED AND INSTALLED ADEQUATELY TO TRANSFER APPLIED PRODUCT LOADS TO THE BUILDING STRUCTURE.

ANCHORS SHALL BE CORROSION RESISTANT, SPACED AS SHOWN ON DETAILS AND INSTALLED PER MANUF'S INSTRUCTIONS. SPECIFIED EMBEDMENT TO BASE MATERIAL SHALL BE BEYOND WALL DRESSING OR STUCCO.

A LOAD DURATION INCREASE IS USED IN DESIGN OF ANCHORS INTO WOOD ONLY.

ALL SHIMS TO BE HIGH IMPACT, NON–METALLIC AND NON–COMPRESSIBLE.

MATERIALS INCLUDING BUT NOT LIMITED TO STEEL/METAL SCREWS, THAT COME INTO CONTACT WITH OTHER DISSIMILAR MATERIALS SHALL MEET THE REQUIREMENTS OF THE 2014/2017 FLORIDA BUILDING CODE & ADOPTED STANDARDS.

THIS PRODUCT APPROVAL IS GENERIC AND DOES NOT PROVIDE INFORMATION FOR A SITE SPECIFIC PROJECT, i.e. LIFE SAFETY OF THIS PRODUCT, ADEQUACY OF STRUCTURE RECEIVING THIS PRODUCT AND SEALING AROUND OPENING FOR WATER INFILTRATION RESISTANCE ETC.
CONDITIONS NOT SHOWN IN THIS DRAWING ARE TO BE ANALYZED SEPARATELY, AND TO BE REVIEWED BY BUILDING OFFICIAL.

WINDOWS NOT RATED FOR IMPACT.

INSTALLATION OF THIS PRODUCT IN THE HVHZ AREA REQUIRES THE USE OF APPROVED SHUTTERS OR EXTERNAL PROTECTION DEVICES COMPLYING WITH HVHZ REQUIREMENTS.

INSTALLATION OF THIS SYSTEM OUTSIDE THE HVHZ AREA SHALL MEET THE APPLICABLE REQUIREMENTS FOR WIND BORNE DEBRIS PROTECTION.

MONOLITHIC GLASS
NON–IMPACT

JUL 12 2017

PRODUCT REVISED
as complying with the Florida Building Code
NOA–No. 17-0413.03
Expiration Date 09/26/2022
By
Miami–Dade Product Control

JAVAD AHMAD
LICENSE
No. 70592
STATE OF FLORIDA
PROFESSIONAL ENGINEER

AL-FAROOQ CORPORATION
ENGINEERS & PRODUCT DEVELOPMENT
9360 SUNSET DRIVE, SUITE 220
MIAMI, FLORIDA 33173
(C.A.N. 3538)
TEL. (305) 264-8100 FAX. (305) 262-6978

COMP–ANL\W95–45NA

SERIES 100 ALUMINUM SINGLE HUNG WDW. (N.I.)

New Age Windows & Doors Corp.
7196 N.W. 77TH TERRACE
MEDLEY, FL. 33166
TEL. (305) 889–0703 FAX. (305) 889–0710

revisions:

no	date	by	description
F	10.29.07	H	NO CHANGE THIS SHEET
G	04.10.12	H	UPDATED TO 2010 FBC
H	06.08.14	H	UPDATED TO 2014 FBC
I	06.12.17		EDITORIAL CHANGES

date: 10–17–95
scale: 1/2"=1'–0"
dr. by: TARIQ
chk. by:

drawing no.
W95–45

sheet 1 of 4

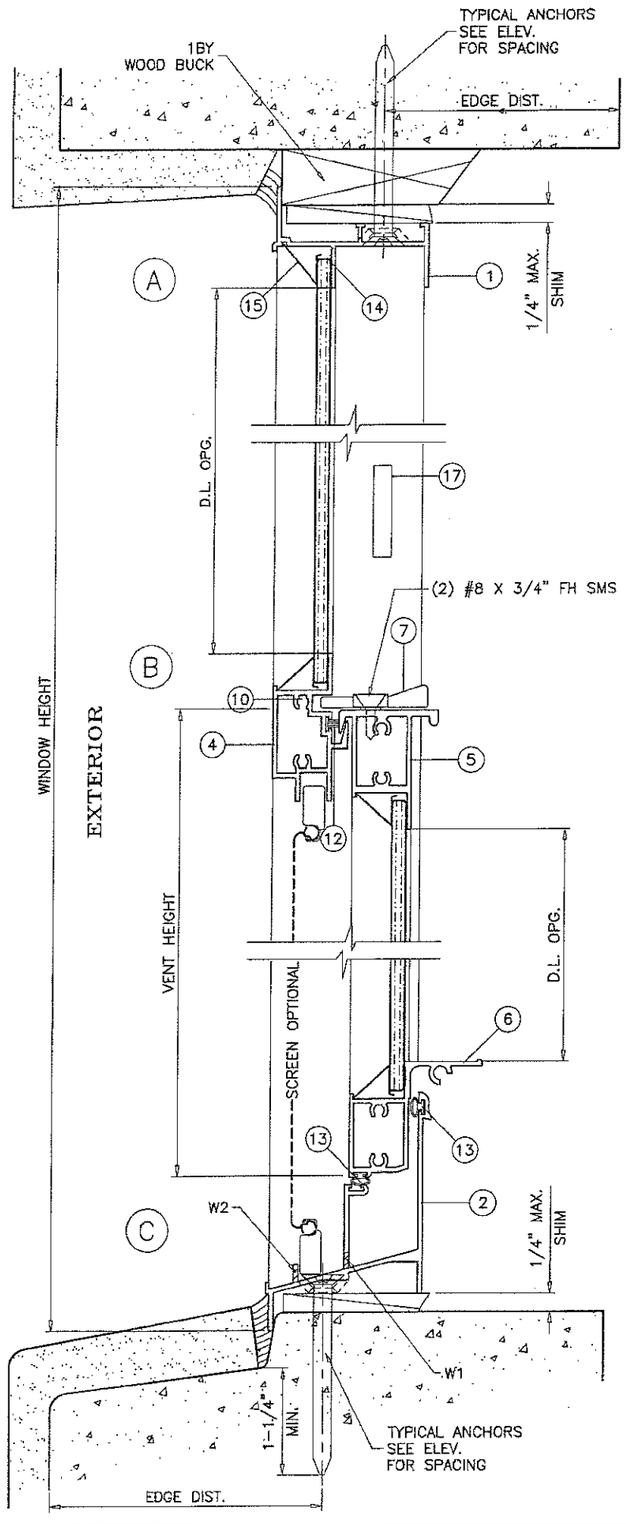

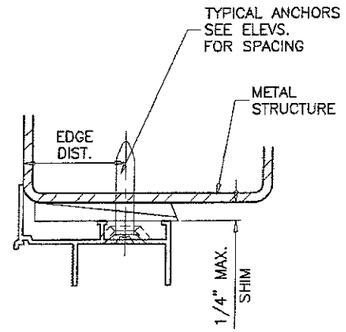

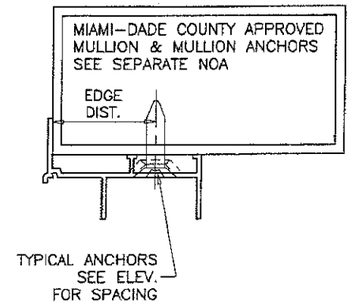

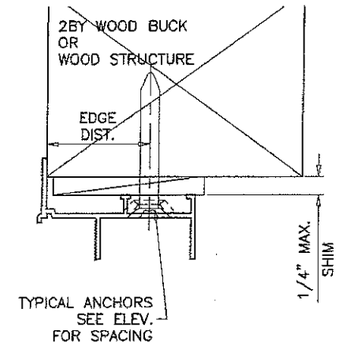

WOOD BUCKS AND METAL STRUCTURE NOT BY NEW AGE MUST SUSTAIN LOADS IMPOSED BY GLAZING SYSTEM AND TRANSFER THEM TO THE BUILDING STRUCTURE.

TYPICAL ANCHORS: SEE ELEV. FOR SPACING AND CHART ON SHEET 1 FOR CAPACITY

ANCHORS TYPE 'A'

1/4" DIA. ULTRACON BY 'ELCO' (Fu=177 KSI, Fy=155 KSI)

INTO 2BY WOOD BUCKS OR WOOD STRUCTURES
1-1/2" MIN. PENETRATION INTO WOOD

THRU 1BY BUCKS INTO CONC. OR MASONRY
1-1/4" MIN. EMBED INTO CONC. OR MASONRY

DIRECTLY INTO CONC. OR MASONRY
1-1/4" MIN. EMBED INTO CONC. OR MASONRY

ANCHORS TYPE 'B'

5/16" DIA. ULTRACON BY 'ELCO' (Fu=177 KSI, Fy=155 KSI)

INTO 2BY WOOD BUCKS OR WOOD STRUCTURES
1-1/2" MIN. PENETRATION INTO WOOD

THRU 1BY BUCKS INTO CONC. OR MASONRY
1-1/4" MIN. EMBED INTO CONC. OR MASONRY

DIRECTLY INTO CONC. OR MASONRY
1-1/4" MIN. EMBED INTO CONC. OR MASONRY

1/4" DIA. TEKS OR SELF DRILLING SCREWS (GRADE 5 CRS)
INTO METAL STRUCTURES

STEEL : 12 GA. MIN. (Fy = 36 KSI MIN.)
ALUMINUM : 1/8" THK. MIN. (6063-T5 MIN.)
(STEEL IN CONTACT WITH ALUMINUM TO BE PLATED OR PAINTED)

#12 SMS OR SELF DRILLING SCREWS (GRADE 2 CRS)

INTO MIAMI-DADE COUNTY APPROVED MULLIONS (MIN. THK. = 1/8")
(NO SHIM SPACE)

ANCHORS EDGE DISTANCES

INTO CONCRETE AND MASONRY = 1-3/4" MIN.
INTO WOOD STRUCTURE = 1" MIN.
INTO METAL STRUCTURE = 1/2" MIN.

WOOD AT HEAD, SILL OR JAMBS SG = 0.55 MIN.
CONCRETE AT HEAD, SILL OR JAMBS f'c = 3000 PSI MIN.
C-90 HOLLOW/FILLED BLOCK AT JAMBS f'm = 2000 PSI MIN.

PRODUCT REVISED
as complying with the Florida Building Code
NOA-No. 17-0413.03
Expiration Date 09/26/2022
By
Miami-Dade Product Control

SEALANTS:

FRAME CORNERS AND INSTALLATION SCREWS SEALED WITH SEAM SEALER. FIXED MEETING RAIL SEAMS SEALED WITH SILICONE.

WEEPHOLES:

W1 = 1/2" X 1/4" WEEP HOLE AT 2-3/8" FROM EACH END
W2 = 1/2" LONG NOTCH AT EACH END

JUL 12 2017

JAVAD AHMAD
LICENSE
No. 70592
STATE OF FLORIDA
PROFESSIONAL ENGINEER

AL-FAROOQ CORPORATION
ENGINEERS & PRODUCT DEVELOPMENT
9360 SUNSET DRIVE, SUITE 220
MIAMI, FLORIDA 33173 (C.A.N. 3538)
TEL. (305) 264-8100 FAX. (305) 262-6978

COMP-ANL\W95-45NA

SERIES 100 ALUMINUM SINGLE HUNG WDW. (N.I.)

New Age Windows & Doors Corp.
7196 N.W. 77TH TERRACE
MEDLEY, FL. 33166
TEL. (305) 889-0703 FAX. (305) 889-0710

revisions:

no	date	by	description
F	10.29.07	H	ANCHOR EMBED ADDED
G	04.10.12	H	UPDATED TO 2010 FBC
H	08.08.14	H	UPDATED TO 2014 FBC
I	06.12.17		EDITORIAL CHANGES

date: 10-17-95
scale: 1/2" = 1"
dr. by: TARIQ
chk. by:

drawing no.
W95-45

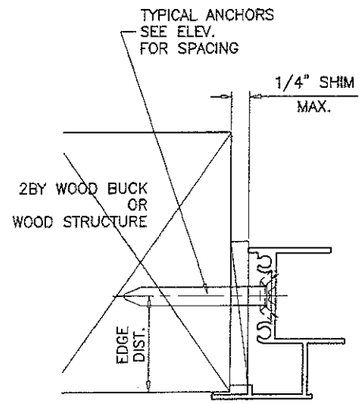

ITEM #	PART #	REQD.	DESCRIPTION	MATERIAL	MANF./SUPPLIER/REMARKS
1	BA-4573	1	FRAME HEAD	6063-T6	–
2	NEWA-32	1	FRAME SILL	6063-T6	–
3	BA-4386	2	FRAME JAMB	6063-T6	–
4	SW-41673	1	MEETING RAIL	6063-T5	–
5	BA-4638	1	VENT TOP RAIL	6063-T5	–
6	BA-4764	1	VENT BOTTOM RAIL	6063-T6	–
7	–	2/VENT	SWEEP LATCH	ZAMAK	AT 8-1/4" FROM EACH END
8	BA-4425	2/ VENT	VENT SIDE RAIL	6063-T5	–
9	–	2/ CORNER	FRAME ASSEMBLY SCREWS	–	#8 X 1" P.H. SMS
10	–	2/ CORNER	VENT ASSEMBLY SCREWS	–	#8 X 1" P.H. SMS
11	–	–	–	–	–
12	–	AS REQD.	FIN SEAL PILE (.187 X .250)	–	ULTRAFAB
13	FP-389-AW	AS REQD.	BULB WEATHER STRIP (.185 X .250)	VINYL	PROTOTYPE PLASTICS
14	860	AS REQD.	BACK BEDDING	SILICONE	PECORA CORP.
15	–	AS REQD.	GLAZING BEAD	ALUMINUM	ROLL FORMED
16	3530	2	BLOCK & TACKLE BALANCE	2	5/8" BOX, WINDOW COMPONENTS
17	–	2	TAKE OUT CLIP AT ±3" FROM TOP RAIL	STEEL	AT EACH JAMB

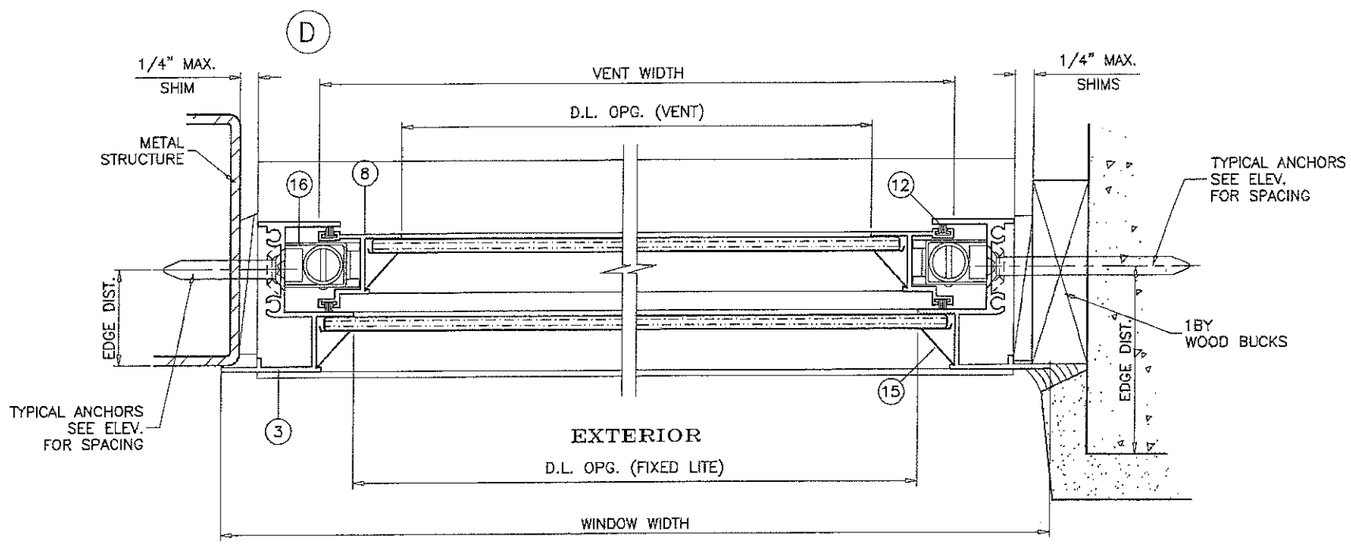

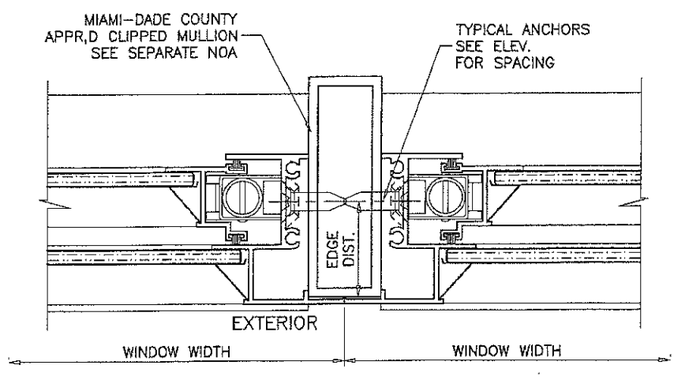

PRODUCT REVISED
as complying with the Florida Building Code
NOA-No. 17-0413.03
Expiration Date 09/26/2022
By
Miami-Dade Product Control

JUL 12 2017

JAVAD AHMAD
LICENSE
No. 70592
STATE OF FLORIDA
PROFESSIONAL ENGINEER

AL-FAROOQ CORPORATION
ENGINEERS & PRODUCT DEVELOPMENT
9360 SUNSET DRIVE, SUITE 220
MIAMI, FLORIDA 33173 (C.A.N. 3538)
TEL. (305) 264-8100 FAX. (305) 262-6978

COMP-ANL\W95-45NA

SERIES 100 ALUMINUM SINGLE HUNG WDW. (N.I.)

New Age Windows & Doors Corp.
7196 N.W. 77TH TERRACE
MEDLEY, FL. 33166
TEL. (305) 889-0703 FAX. (305) 889-0710

revisions:

no	date	by	description
F	10.29.07	H	NO CHANGE THIS SHEET
G	04.10.12	H	NO CHANGE THIS SHEET
H	08.08.14	H	UPDATED TO 2014 FBC
J	06.12.17		EDITORIAL CHANGES

date: 10-17-95
scale: 1/2" = 1"
dr. by: TARIQ
chk. by:

drawing no.
W95-45

sheet 3 of 4

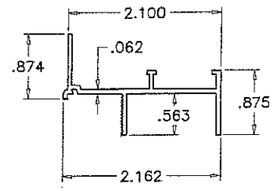

1 FRAME HEAD

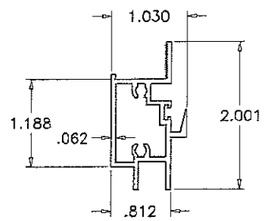

4 MEETING RAIL

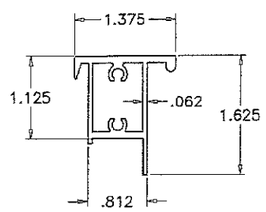

5 VENT TOP RAIL

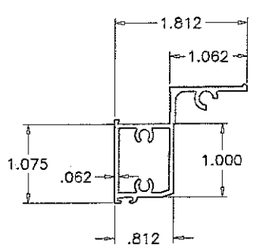

6 VENT BOTTOM RAIL

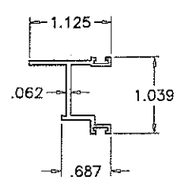

8 SASH SIDE RAIL

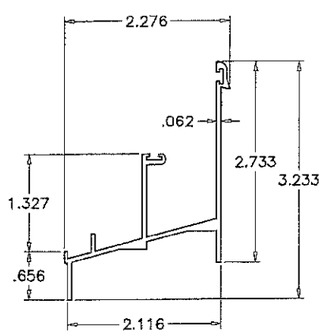

2 FRAME SILL

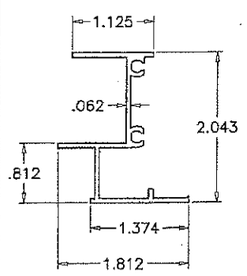

3 FRAME JAMB

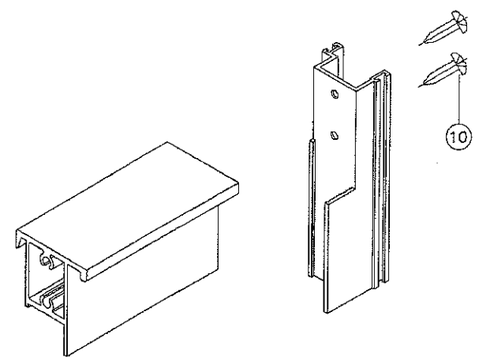

VENT TOP CORNER

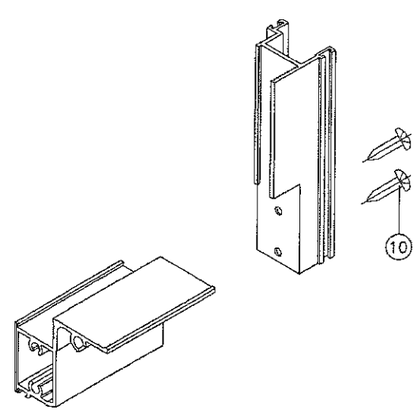

VENT BOTTOM CORNER

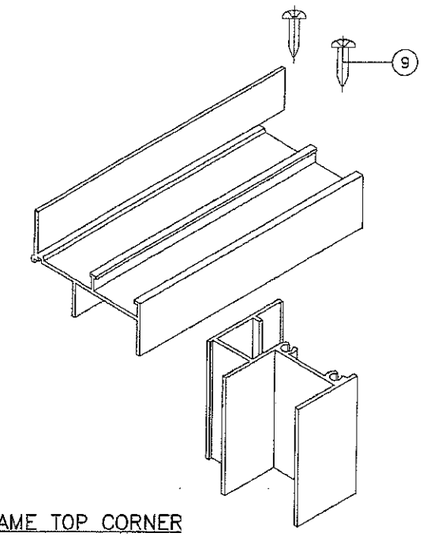

FRAME TOP CORNER

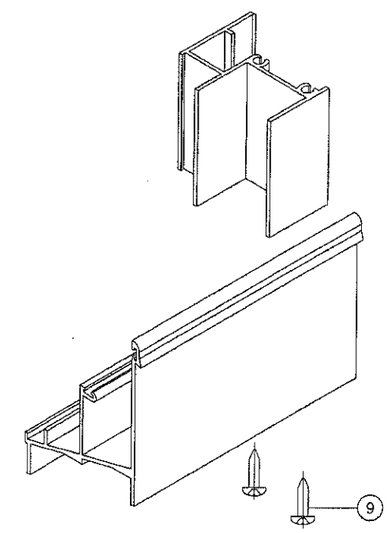

FRAME BOTTOM CORNER

PRODUCT REVISED
as complying with the Florida Building Code
NOA-No. 17-0413.03
Expiration Date 09/26/2022 APR. 12 2017
By
Miami-Dade Product Control

JAVAD AHMAD
LICENSE
No. 70592
STATE OF FLORIDA
PROFESSIONAL ENGINEER

AL-FAROOQ CORPORATION
ENGINEERS & PRODUCT DEVELOPMENT
9360 SUNSET DRIVE, SUITE 220
MIAMI, FLORIDA 33173 (C.A.N. 3598)
TEL. (305) 264-8100 FAX. (305) 262-6978

COMP-ANL\W95-45NA

SERIES 100 ALUMINUM SINGLE HUNG WDW. (N.I.)

New Age Windows & Doors Corp.
7196 N.W. 77TH TERRACE
MEDLEY, FL. 33166
TEL. (305) 889-0703 FAX. (305) 889-0710

revisions:

no	date	by	description
F	10.29.07	H	NO CHANGE THIS SHEET
G	04.10.12	H	NO CHANGE THIS SHEET
H	08.08.14	H	NO CHANGE THIS SHEET
I	06.12.17		EDITORIAL CHANGES

date: 10-17-95
scale: 1/2" = 1"
dr. by: TARIQ
chk. by:

drawing no.
W95-45

sheet 4 of 4