MIAMI-DADE COUNTY
PRODUCT CONTROL SECTION
11805 SW 26 Street, Room 208
Miami, Florida 33175-2474
T (786) 315-2590 F (786) 315-2599
www.miamidade.gov/economy

DEPARTMENT OF REGULATORY AND ECONOMIC RESOURCES (RER)
BOARD AND CODE ADMINISTRATION DIVISION

NOTICE OF ACCEPTANCE (NOA)

PGT Industries, Inc.
1070 Technology Drive
North Venice, FL 34275

SCOPE:

This NOA is being issued under the applicable rules and regulations governing the use of construction materials. The documentation submitted has been reviewed and accepted by Miami-Dade County RER -Product Control Section to be used in Miami Dade County and other areas where allowed by the Authority Having Jurisdiction (AHJ).

This NOA shall not be valid after the expiration date stated below. The Miami-Dade County Product Control Section (In Miami Dade County) and/or the AHJ (in areas other than Miami Dade County) reserve the right to have this product or material tested for quality assurance purposes. If this product or material fails to perform in the accepted manner, the manufacturer will incur the expense of such testing and the AHJ may immediately revoke, modify, or suspend the use of such product or material within their jurisdiction. RER reserves the right to revoke this acceptance, if it is determined by Miami-Dade County Product Control Section that this product or material fails to meet the requirements of the applicable building code.

This product is approved as described herein, and has been designed to comply with the Florida Building Code, including the High Velocity Hurricane Zone.

DESCRIPTION: Series **"SGD-780"** Aluminum Sliding Glass Door w/90^0 & 135^0 corner (Reinf/Non-Reinf)– **L.M.I.**

APPROVAL DOCUMENT: Drawing No. **MD-780.0 Rev B** titled "Aluminum Sliding Glass Door (LM)", sheets 1 through 18 of 18, dated 10/05/15 and last revised on 07/17/17, prepared by PGT Industries, signed and sealed by Anthony Lynn Miller, P. E., bearing the Miami–Dade County Product Control Revision stamp with the Notice of Acceptance number and Expiration date by the Miami–Dade County Product Control Section.

MISSILE IMPACT RATING: Large and Small Missile Impact Resistant

Limitations:

1. Max Panels configuration is allowed per tables **1** thru **3**, not to exceed **462.11 ft²**. The inside/outside 90^0 & 135^0 corner units are limited to straight panel each corner side per tables **1** thru **3**.
2. See sheets 7 & 8 for Design Pressure (DP), glass type, sill type for positive DP limit, applicable reinforcement and anchorage quantity requirements. See sheet **11** for glass options. See sheets **12** thru **15** for anchors lay out at tracks and corners. See Pocket anchor details in sheet 6.
3. Pockets wall, cavity are not part of this approval. Exterior/Interior Pocket wall & applicable Egress requirement to be reviewed by Building official.

LABELING: Each unit shall bear a permanent label with the manufacturer's name or logo, city, state and series and following statement: "Miami-Dade County Product Control Approved", noted herein.

RENEWAL of this NOA shall be considered after a renewal application has been filed and there has been no change in the applicable building code negatively affecting the performance of this product.

TERMINATION of this NOA will occur after the expiration date or if there has been a revision or change in the materials, use, and/or manufacture of the product or process. Misuse of this NOA as an endorsement of any product, for sales, advertising or any other purposes shall automatically terminate this NOA. Failure to comply with any section of this NOA shall be cause for termination and removal of NOA.

ADVERTISEMENT: The NOA number preceded by the words Miami-Dade County, Florida, and followed by the expiration date may be displayed in advertising literature. If any portion of the NOA is displayed, then it shall be done in its entirety.

INSPECTION: A copy of this entire NOA shall be provided to the user by the manufacturer or its distributors and shall be available for inspection at the job site at the request of the Building Official.

This NOA **revises and renews NOA #16-0629.10** and consists of this page 1 and evidence pages E-1 & E-2, as well as approval document mentioned above.

The submitted documentation was reviewed by **Ishaq I. Chanda, P.E.**

MIAMI-DADE COUNTY APPROVED

7/20/17

NOTICE OF ACCEPTANCE: EVIDENCE SUBMITTED

A. DRAWINGS

1. Manufacturer's die drawings and sections (Submitted under files # listed below)
2. Drawing No. **MD-780.0 Rev B** titled "Aluminum Sliding Glass Door (LM)", sheets 1 through 18 of 18, dated 10/05/15 and last revised on 07/17/17, prepared by PGT Industries, signed and sealed by Anthony Lynn Miller, P.E.

B. TESTS

1. Test reports on: 1) Uniform Static Air Pressure Test, Loading per FBC TAS 202-94
   2) Large Missile Impact Test per FBC, TAS 201-94
   3) Cyclic Wind Pressure Loading per FBC, TAS 203-94

Along with marked–up drawings and installation diagram of Aluminum SGD (w TPS, Super, Cardinal & Duraseal spacers), prepared by Fenestration Testing Laboratory, Inc., Test Reports No(s) **FTL–8717, FTL-8970** and **FTL-8968**, dated 02/15/16, 06/07/16 and 06/20/16, all signed and sealed by Idalmis Ortega, P. E.

2. Test reports on: 1) Air Infiltration Test, per FBC, TAS 202-94
   2) Uniform Static Air Pressure Test, Loading per FBC TAS 202-94
   3) Water Resistance Test, per FBC, TAS 202-94
   4) Large Missile Impact Test per FBC, TAS 201-94
   5) Cyclic Wind Pressure Loading per FBC, TAS 203-94
   6) Forced Entry Test, per FBC 2411 3.2.1, TAS 202-94

Along with marked–up drawings and installation diagram of Aluminum SGD w/135^0 interior/Exterior corner & interior pocket mount, prepared by Fenestration Testing Laboratory, Inc., Test Reports No(s) **FTL–8322** and **FTL-8374**, dated 08/06/15, both signed and sealed by Idalmis Ortega, P. E. (Addendum letter dated Jan 18, 2016, issued by Fenestration Testing Lab)
Along with marked–up drawings and installation diagram of Aluminum SGD, prepared by Architectural Testing, Inc., Test Report No. **ATI–8124.01-401-18 R**, dated 11/13/2008, signed and sealed by Joseph A. Reed, P.E. (submitted under files # **12-0516.04**)
Along with marked–up drawings and installation diagram of Aluminum SGD, prepared by Fenestration Testing Laboratory, Inc., Test Reports No(s) **FTL–5618**, dated 06/21/2008, **FTL–5619,** dated 07/07/2008, **FTL–5254**, dated 05/17/2007 and **FTL–5273,** dated 05/07/2007 respectively, all signed and sealed by Carlos S. Rionda, P. E.(Submitted under file #**11-1018.12**).

C. CALCULATIONS

1. Anchor verification calculations and structural analysis dated 04/08/17 and last revised on 07/17/17, complying with FBC-2017 (**6th** Edition), prepared by PGT, signed and sealed by Lynn Miller, P.E.
2. Anchor verification calculations and structural analysis dated 01/20/16, complying with FBC-2014 (**5th** Edition), prepared by PGT, signed and sealed by Lynn Miller, P.E. (submitted under file #15-0903.09)
2. Glazing complies w/ ASTME-1300-02, 04 & -09.

Ishaq I. Chanda

Ishaq I. Chanda, P.E.
Product Control Examiner
NOA No. 17-0420.04
Expiration Date: August 02, 2022
Approval Date: July 27, 2017

NOTICE OF ACCEPTANCE: EVIDENCE SUBMITTED

D. QUALITY ASSURANCE

1. Miami Dade Department of Regulatory and Economic Resources (RER)

E. MATERIAL CERTIFICATIONS

1. Notice of Acceptance No. **14-0916.11** issued to **Kuraray America, Inc.** (Former E.I. DuPont DeNemours & Co., Inc.) for the "**Sentry Glass ® (Clear and White) Glass Interlayers**", expiring on 07/04/18.
2. Notice of Acceptance No. **16-1117.01** issued to **Kuraray America, Inc.** (Former E.I. DuPont DeNemours & Co., Inc.) for the "**Trofosil Ultra clear & color PVB Interlayers** (former **Butacite)**", expiring on 07/08/19.

F. STATEMENTS

1. Statement letter of conformance to FBC 2017 (6th Edition) and FBC 2014(5th edition), prepared by PGT, dated July 17, 2017, signed and sealed by Lynn Miller, P.E.
2. Statement letter of conformance to FBC 2014(5th edition) and letter of no financial interest, prepared by PGT, dated 08/28/15, signed and sealed by Lynn Miller, P.E. (submitted under file #15-0903.09)
3. Spacer reference e-mail by PGT dated Jan 13, 2016, signed by Lynn Miller, P.E.
4. Lab compliance as part of the above referenced test report.

G. OTHER

1. This NOA **revises & renews** NOA **#16-0629.10**, expiring 08/02/22.
2. Test proposal # **07-2583**, approved by BCCO, #**14-1739** & **17-0387** approved by RER.

Ishaq I. Chanda

Ishaq I. Chanda, P.E.
Product Control Examiner
NOA No. 17-0420.04
Expiration Date: August 02, 2022
Approval Date: July 27, 2017

SERIES 780, IMPACT RESISTANT SLIDING GLASS DOOR INCLUDING INT./EXT. POCKETS & 90°/135° CORNERS

GENERAL NOTES

1) GLAZING TYPE OPTIONS: SEE TABLE B, THIS SHEET & GLAZING DETAILS ON SHEET 11.
2) DESIGN PRESSURES:
   A. NEGATIVE DESIGN LOADS BASED ON TESTED PRESSURE AND GLASS TABLES ASTM E1300.
   B. POSITIVE DESIGN LOADS BASED ON WATER TEST PRESSURE AND GLASS TABLES ASTM E1300.
   C. DESIGN LOADS ARE BASED ON ALLOWABLE STRESS DESIGN, ASD.
3) ANCHORAGE: THE 33-1/3% STRESS INCREASE HAS NOT BEEN USED IN THE DESIGN OF THIS PRODUCT. MATERIALS, INCLUDING BUT NOT LIMITED TO STEEL SCREWS, THAT COME INTO CONTACT WITH OTHER DISSIMILAR MATERIALS SHALL MEET THE REQUIREMENTS OF THE CURRENT FLORIDA BUILDING CODE.
4) SHUTTERS ARE NOT REQUIRED PER FBC REQUIREMENTS, AS APPLICABLE.
5) INSTALLATION SCREWS, FRAME SPLICES, FRAME AND PANEL CORNERS TO BE SEALED WITH NARROW JOINT SEALANT.
6) REFERENCES: ELCO ULTRACON, CRETEFLEX AND AGGREGATOR NOA'S, ANSI/AF&PA NDS FOR WOOD CONSTRUCTION AND ADM, ALUMINUM DESIGN MANUAL.
7) THIS PRODUCT HAS BEEN DESIGNED & TESTED TO COMPLY WITH THE REQUIREMENTS OF THE CURRENT FLORIDA BUILDING CODE, INCLUDING THE HIGH VELOCITY HURRICANE ZONE (HVHZ).
8) DOOR SIZES MUST BE VERIFIED FOR COMPLIANCE WITH EGRESS REQUIREMENTS PER THE CURRENT FLORIDA BUILDING CODE, AS APPLICABLE.
9) APPLICABLE TEST REPORTS: FTL-5254, 5273, 5618, 5619, 8322, 8374 & ATI-81241.01-401-18.

TABLE A:

Anchor Group	Anchor Type	Frame Member	Substrate	Min. Edge Distance	Min. O.C. Distance	Min. Embedment or Metal Thickness
A	#12 410 SS SMS (min. of 3 threads beyond metal substrate)	All	Southern Pine (SG = 0.55)	9/16"	7/8"	1-3/8"
			6063-T5 Aluminum	3/8"	9/16"	0.063"
			A36 Steel	3/8"	9/16"	0.050"
			Gr. 33 Steel Stud	3/8"	9/16"	0.045" (18 Ga)
	1/4" Elco Aggre-Gator®	All	Concrete (min. 2.22 ksi)	1-1/2"	3"	1-3/8"
		Jamb / P-hook	Filled Block (ASTM C90)	2"	3"	2"
		Jamb / P-hook	Hollow Block (ASTM C90)	2"	3"	1-1/4"
	F_y=57 ksi, F_u=96 ksi	All	Southern Pine (SG = 0.55)	1"	1"	1-3/8"
B	#12 Steel SMS (Gr. 5) (min. of 3 threads beyond metal substrate)	All	Southern Pine (SG = 0.55)	9/16"	7/8"	1-3/8"
			6063-T5 Aluminum	3/8"	9/16"	0.063"
			A36 Steel	3/8"	9/16"	0.050"
			Gr. 33 Steel Stud	3/8"	9/16"	0.045" (18 Ga)
C	1/4" Elco UltraCon®	All	Concrete (min. 2.85 ksi)	1"	4"	1-3/8"
	F_y=155 ksi, F_u=177 ksi	Jamb / P-hook	Hollow Block (ASTM C90)	1"	6"	1-1/4"
D	1/4" Elco UltraCon®	All	Concrete (min. 2.85 ksi)	2-1/2"	4"	1-3/8"
		Jamb / P-hook	Filled Block (ASTM C90)	2-1/2"	4"	1-3/4"
	F_y=155 ksi, F_u=177 ksi	Jamb / P-hook	Hollow Block (ASTM C90)	2-1/2"	6"	1-1/4"
	1/4" 410 SS Elco CreteFlex®	Head / Sill	Concrete (min. 3.35 ksi)	1"	4"	1-3/4"
		Jamb / P-hook	Concrete (min. 3.35 ksi)	1"	6"	1-3/4"
		Jamb / P-hook	Hollow Block (ASTM C90)	1-3/4"	6"	1-1/4"
	F_y=127.4 ksi, F_u=189.7 ksi	All	Southern Pine (SG = 0.55)	1"	1"	1-3/8"

1) WHERE SUBSTRATE CONDITIONS REQUIRE ANCHORAGE FROM MORE THAN ONE OF THE ANCHOR GROUPS ABOVE, CHOOSE THE ANCHOR GROUP OF THE LOWEST LETTER FOR ALL TABLES IN THIS APPROVAL.
2) ALL ANCHOR HEAD TYPES ARE APPLICABLE.
3) FOR STEEL STUDS, MIN. FU = 45 KSI, MIN FY = 33 KSI.
4) FILLED BLOCK VALUES MAY ALSO BE USED IN HOLLOW BLOCK APPLICATIONS.

CODES / STANDARDS USED:

- 2017 FLORIDA BUILDING CODE (FBC), 6TH EDITION
- 2014 FLORIDA BUILDING CODE (FBC), 5TH EDITION
- ASTM E1300-09
- ANSI/AF&PA NDS-2015 FOR WOOD CONSTRUCTION
- ALUMINUM DESIGN MANUAL, ADM-2015
- AISI S100-12
- AISC 360-10

IMPACT RATING
RATED FOR LARGE & SMALL MISSILE IMPACT RESISTANCE

DESIGN PRESSURE RATING
SEE TABLES 1-3 & C1-C2 ON SHEETS 7 & 8

TABLE B: SEE DETAILS ON SHEET 11

Glass Type	Description (Listed from Exterior to Interior)	Table #	Sheet #
1	7/16" Laminated: (1) Lite of 3/16" ANN Glass and (1) Lite of 3/16" HS Glass with .090" PVB Interlayer	2	7
2	9/16" Laminated: (1) Lite of 1/4" ANN Glass and (1) Lite of 1/4" HS Glass with .090" PVB Interlayer	2	7
3	1-1/16" Laminated I.G.: 3/16" T Exterior Cap + 7/16" Air Space + 7/16" Laminated consisting of (1) Lite of 3/16" ANN Glass and (1) Lite of 3/16" HS Glass with .090" PVB Interlayer	2	7
4	1-1/16" Laminated I.G.: 1/4" T Exterior Cap + 3/8" Air Space + 7/16" Laminated consisting of (1) Lite of 3/16" ANN Glass and (1) Lite of 3/16" HS Glass with .090" PVB Interlayer	2	7
5	7/16" Laminated: (1) Lite of 3/16" ANN Glass and (1) Lite of 3/16" HS Glass with .090" SG Interlayer	1	7
6	9/16" Laminated: (1) Lite of 1/4" ANN Glass and (1) Lite of 1/4" HS Glass with .090" SG Interlayer	1	7
7	7/16" Laminated: (2) Lites of 3/16" HS Glass with .090" SG Interlayer	3	8
8	9/16" Laminated: (2) Lites of 1/4" HS Glass with .090" SG Interlayer	3	8
9	1-1/16" Laminated I.G.: 3/16" T Exterior Cap + 7/16" Air Space + 7/16" Laminated consisting of (1) Lite of 3/16" ANN Glass and (1) Lite of 3/16" HS Glass with .090" SG Interlayer	1	7
10	1-1/16" Laminated I.G.: 1/4" T Exterior Cap + 3/8" Air Space + 7/16" Laminated consisting of (1) Lite of 3/16" ANN Glass and (1) Lite of 3/16" HS Glass with .090" SG Interlayer	1	7
11	1-1/16" Laminated I.G.: 3/16" T Exterior Cap + 7/16" Air Space + 7/16" Laminated consisting of (2) Lites of 3/16" HS Glass with .090" SG Interlayer	3	8
12	1-1/16" Laminated I.G.: 1/4" T Exterior Cap + 3/8" Air Space + 7/16" Laminated consisting of (2) Lites of 3/16" HS Glass with .090" SG Interlayer	3	8

ANCHOR NOTES

1) FOR CONCRETE/CMU SUBSTRATE APPLICATIONS IN MIAMI-DADE COUNTY, USE ONLY MIAMI-DADE COUNTY APPROVED ANCHORS. SEE TABLE A ON THIS SHEET FOR EMBEDMENT, EDGE DISTANCE AND SUBSTRATE REQUIREMENTS.

2) FOR OTHER SUBSTRATE APPLICATIONS SEE TABLE A ON THIS SHEET.

3) WOOD BUCKS DEPICTED AS 1X ARE LESS THAN 1-1/2" THICK. PROPERLY SECURED, 1X WOOD BUCKS ARE OPTIONAL IF UNIT IS INSTALLED DIRECTLY TO SOLID CONCRETE OR CMU. WOOD BUCKS DEPICTED AS 2X ARE 1-1/2" THICK OR GREATER. 1X AND 2X BUCKS (WHEN USED) SHALL BE DESIGNED TO PROPERLY TRANSFER LOADS TO THE STRUCTURE. BUCK DESIGN AND INSTALLATION IS THE RESPONSIBILITY OF THE ENGINEER OR ARCHITECT OF RECORD & TO BE REVIEWED BY THE BUILDING OFFICIAL.

4) METAL SUBSTRATE TO MEET MIN. STRENGTH AND THICKNESS REQUIREMENTS PER CURRENT FLORIDA BUILDING CODE AND TO BE REVIEWED BY THE AUTHORITY HAVING JURISDICTION.

5) IF SILL IS TIGHT TO SUBSTRATE, GROUT OR OTHER MATERIAL IS NOT REQUIRED. IF USED, NON-SHRINK, NON-METALLIC GROUT, MAX. 1/4" THICK & 3400 PSI MIN., (DONE BY OTHERS) MUST FULLY SUPPORT THE ENTIRE LENGTH OF THE SILL THAT IS NOT TIGHT TO THE SUBSTRATE, AND TRANSFER SHEAR LOAD TO SUBSTRATE. IF SUBSTRATE IS WOOD, 30# FELT PAPER OR MASTIC IS REQUIRED BETWEEN THE GROUT AND WOOD SUBSTRATE, OR AS APPROVED BY THE AUTHORITY HAVING JURISDICTION.

PRODUCT REVISED as complying with the Florida Building Code
Acceptance No 17-0420.04
Expiration Date AUG 02, 2022
Mir ar' Dade Product Control

ANTHONY LYNN MILLER LICENSE No. 58705 STATE OF FLORIDA PROFESSIONAL ENGINEER
7/17/17

A. LYNN MILLER, P.E.
P.E.# 58705

Title	ALUMINUM SLIDING GLASS DOOR NOA (LM)			Date	10/05/15
Desc.	GENERAL NOTES			Drawn By	J ROSOWSKI
Rev.	UPDATED TO FBC 2017, REV. TABLES 1-3			Rev. Date	04/05/17
Series	SGD-780	Scale NTS	Sheet 1 OF 18	DWG No. MD-780.0	Rev. No. B

1070 TECHNOLOGY DR
N. VENICE, FL 34275
(941)-480-1600
CERT. OF AUTH. #29296

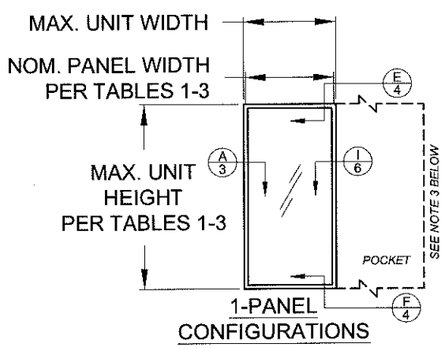

1-PANEL CONFIGURATIONS

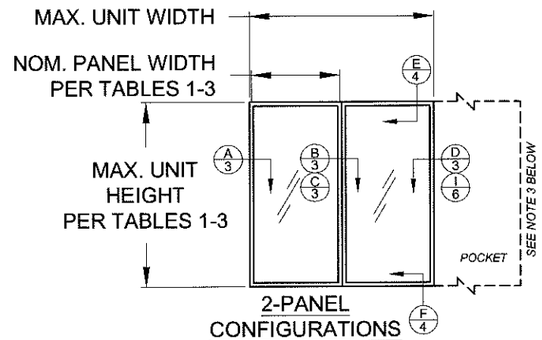

2-PANEL CONFIGURATIONS

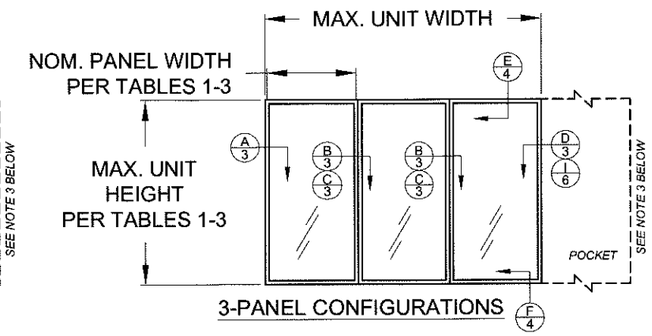

3-PANEL CONFIGURATIONS

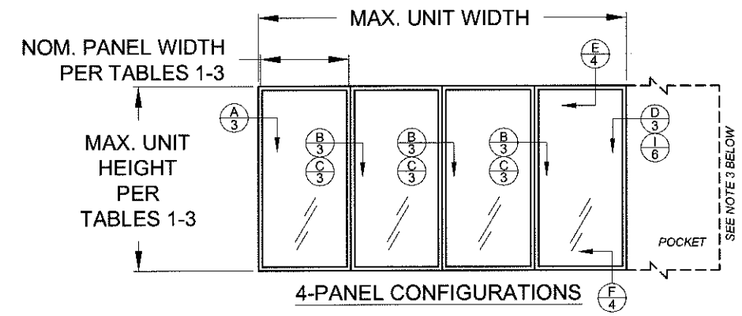

4-PANEL CONFIGURATIONS

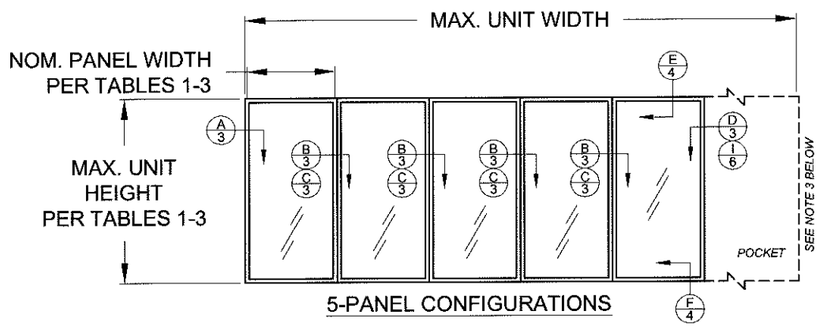

5-PANEL CONFIGURATIONS

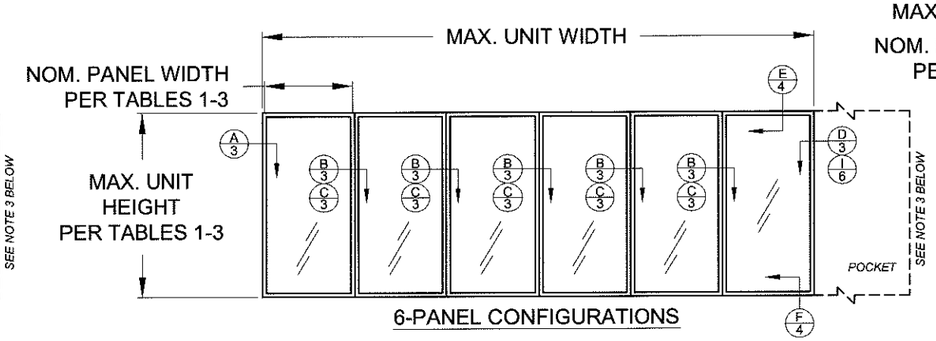

6-PANEL CONFIGURATIONS

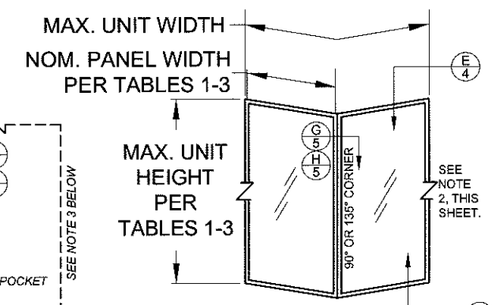

CORNER, TYP.

OUTSIDE CORNER SHOWN, INSIDE CORNER SIMILAR

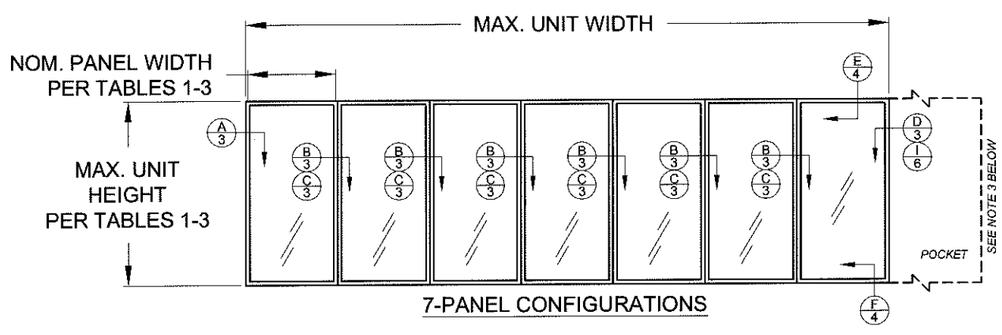

7-PANEL CONFIGURATIONS

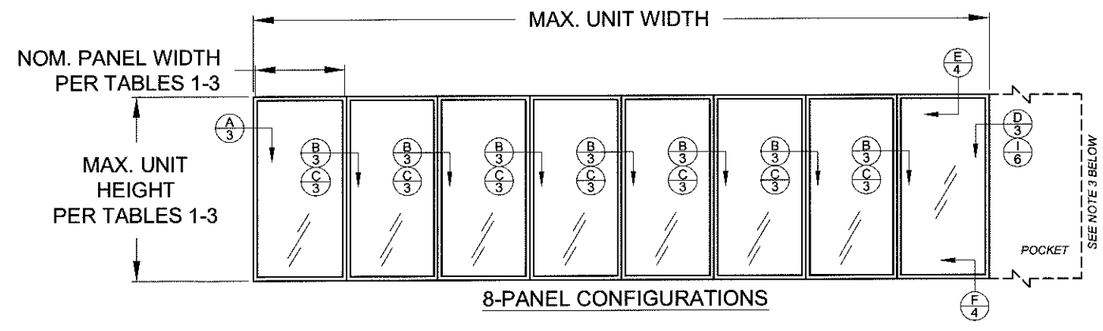

8-PANEL CONFIGURATIONS

CONFIGURATIONS NOTES:

1) ALL CONFIGURATIONS SHOWN ARE ALSO AVAILABLE AS POCKET CONFIGURATIONS AT EITHER OR BOTH JAMB LOCATIONS. EXAMPLE: 4-PANEL XXXX IN POCKET (p) CONFIGURATION CAN BE pXXXXp, pXXXX OR XXXXp. OXXX IN POCKET CONFIGURATION CAN BE OXXXp.

2) 90° & 135° CORNER CONFIGURATIONS ARE A COMBINATION OF ANY 2 STRAIGHT CONFIGURATIONS.

3) POCKET WALL OR CAVITY IS NOT PART OF THIS APPROVAL AND IS TO BE DESIGNED BY OTHERS AND REVIEWED BY THE AUTHORITY HAVING JURISDICTION.

4) FOR NOM. PANEL WIDTH, SEE TABLES 1-3.

5) MAX. ALLOWABLE FRAME SQUARE FOOTAGE = 462.11 FT²

"X" = OPERABLE PANEL
"O" = INOPERABLE PANEL
"p" = POCKET

DETAIL LETTER
X
#
SHEET NUMBER

DLO WIDTH = NOM. PANEL WIDTH - 7.875"
DLO HEIGHT (STD. BOT. RAIL, #22) = DOOR UNIT HEIGHT - 13.47"
DLO HEIGHT (TALL BOT. RAIL, #23) = DOOR UNIT HEIGHT - 17.29"
PANEL HEIGHT = DOOR UNIT HEIGHT - 2.25"

Title	ALUMINUM SLIDING GLASS DOOR NOA (LM)			Date	10/05/15
Desc.	CONFIGURATIONS		Drawn By	J ROSOWSKI	
Rev.	NO CHANGES THIS SHEET.		Rev. Date	04/05/17	
Series	SGD-780	Scale NTS	Sheet 2 OF 18	DWG No. MD-780.0	Rev. No. B

1070 TECHNOLOGY DR
N. VENICE, FL 34275
(941)-480-1600
CERT. OF AUTH. #29296

PRODUCT REVIEWED as complying with the Florida Building Code
Acceptance No. 17-0420.04
Expiration Date 8/2/2022
Mr. ... Product Control

ANTHONY LYNN MILLER
LICENSE
No. 58705
STATE OF FLORIDA
PROFESSIONAL ENGINEER
7/17/17

A. LYNN MILLER, P.E.
P.E.# 58705

PGT®

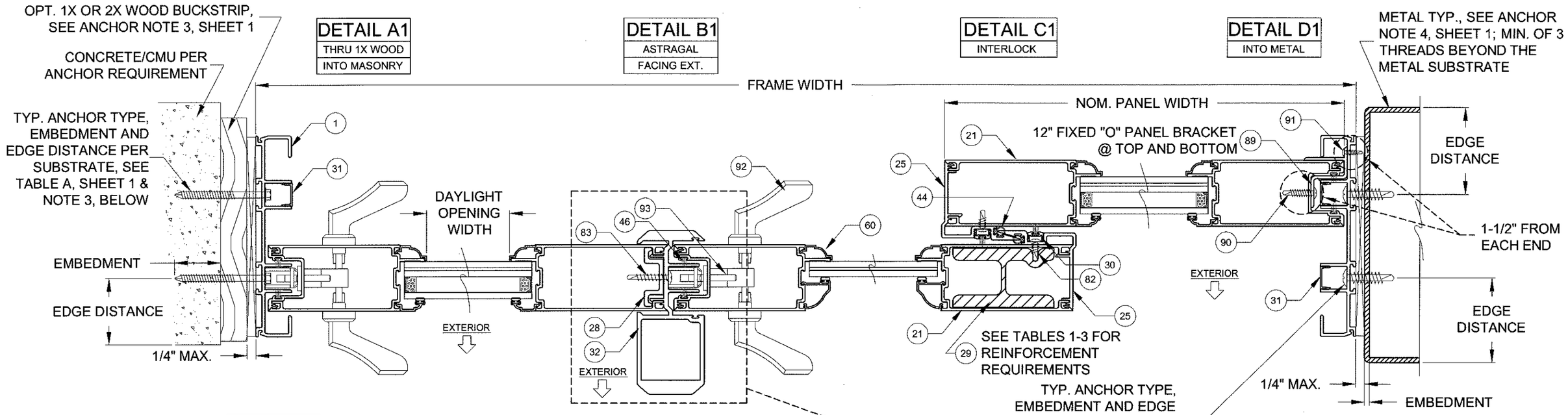

HORIZONTAL SECTION (XXO SHOWN)

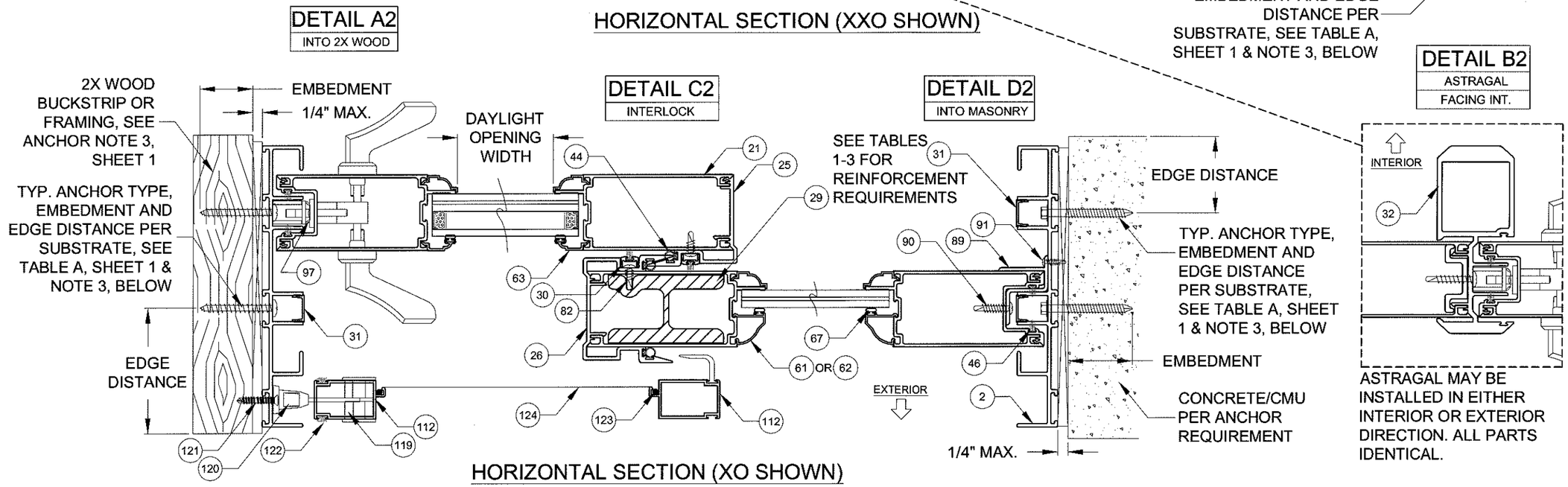

HORIZONTAL SECTION (XO SHOWN)

NOTES
1) DETAILS APPLY TO 2, 3 AND 4 TRACK CONFIGURATIONS. SEE SHEET 12 FOR ANCHOR LOCATIONS & SPACING FOR EACH TRACK CONFIGURATION.
2) REFER TO ANCHOR NOTES, SHEET 1.
3) FOR ANCHOR QUANTITIES, SEE TABLES 1-3.
4) ALL REINFORCEMENTS ARE APPROXIMATELY THE FULL LENGTH OF THE EXTRUSION. REFER TO TEST REPORTS FOR EXACT DIMENSIONS.
5) FOR DAYLIGHT OPENING (DLO) FORMULAS, SEE SHEET 2.

Title	ALUMINUM SLIDING GLASS DOOR NOA (LM)			Date	10/05/15
Desc.	INSTALLATION, HORIZONTAL X-SECT.			Drawn By	J ROSOWSKI
Rev.	NO CHANGES THIS SHEET.			Rev. Date	04/05/17
Series	SGD-780	Scale NTS	Sheet 3 OF 18	DWG No. MD-780.0	Rev. No. B

1070 TECHNOLOGY DR
N. VENICE, FL 34275
(941)-480-1600
CERT. OF AUTH. #29296

PRODUCT REVISED
as complying with the Florida Building Code
Acceptance No. 17-0420.04
Expiration Date 8/2/2022
Florida State Product Control

ANTHONY LYNN MILLER
LICENSE
No. 58705
7/17/17
STATE OF FLORIDA
PROFESSIONAL ENGINEER

A. LYNN MILLER, P.E.
P.E.# 58705

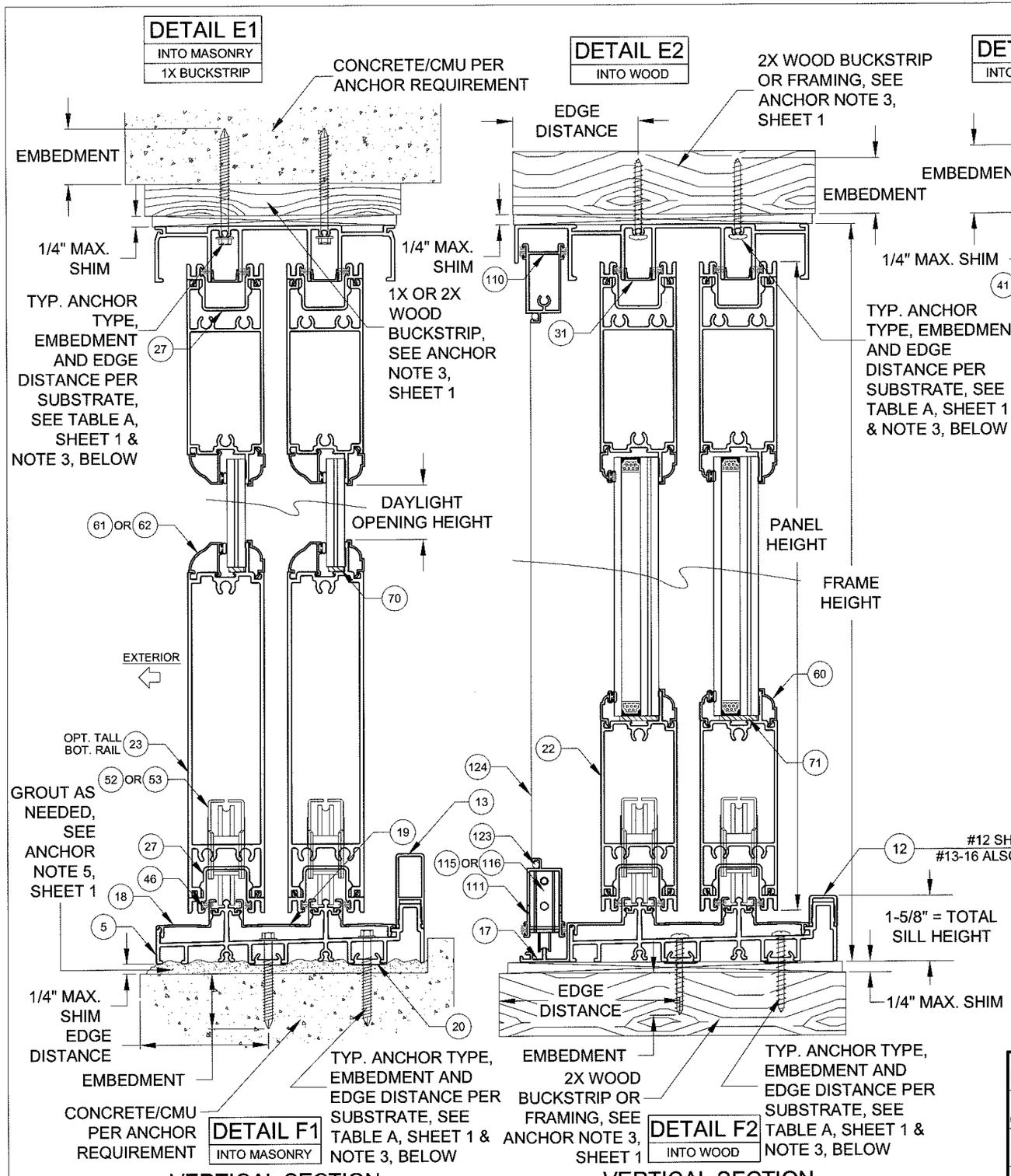

SILL RISER VARIES WITH REQUIRED POSITIVE DESIGN PRESSURE, SEE SHEETS 7-8.

NOTES

1) DETAILS APPLY TO 2, 3 AND 4 TRACK CONFIGURATIONS. SEE SHEETS 12-15 FOR ANCHOR LOCATIONS & SPACING FOR EACH TRACK CONFIGURATION.
2) REFER TO ANCHOR NOTES, SHEET 1.
3) FOR ANCHOR QUANTITIES, SEE TABLES 1-3.
4) FOR DAYLIGHT OPENING (DLO) FORMULAS, SEE SHEET 2.

PRODUCT REVISED
as complying with the Florida Building Code
Acceptance No. 17-0420.04
Expiration Date 8/2/2022
Miami-Dade Product Control

ANTHONY LYNN MILLER
LICENSE
No. 58705
7/17/17
STATE OF FLORIDA
PROFESSIONAL ENGINEER

A. LYNN MILLER, P.E.
P.E.# 58705

Title	ALUMINUM SLIDING GLASS DOOR NOA (LM)			Date	10/05/15
Desc.	INSTALLATION, VERTICAL X-SECT.			Drawn By	J ROSOWSKI
Rev.	NO CHANGES THIS SHEET.			Rev. Date	04/05/17
Series	SGD-780	Scale NTS	Sheet 4 OF 18	DWG No. MD-780.0	Rev. No. B

1070 TECHNOLOGY DR
N. VENICE, FL 34275
(941)-480-1600

CERT. OF AUTH. #29296

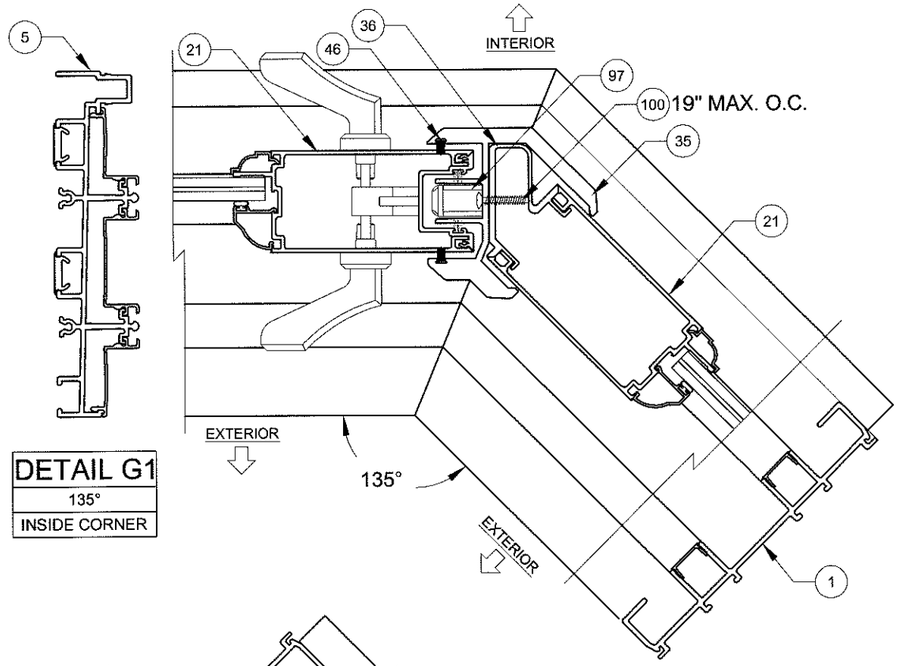

DETAIL G1
135°
INSIDE CORNER

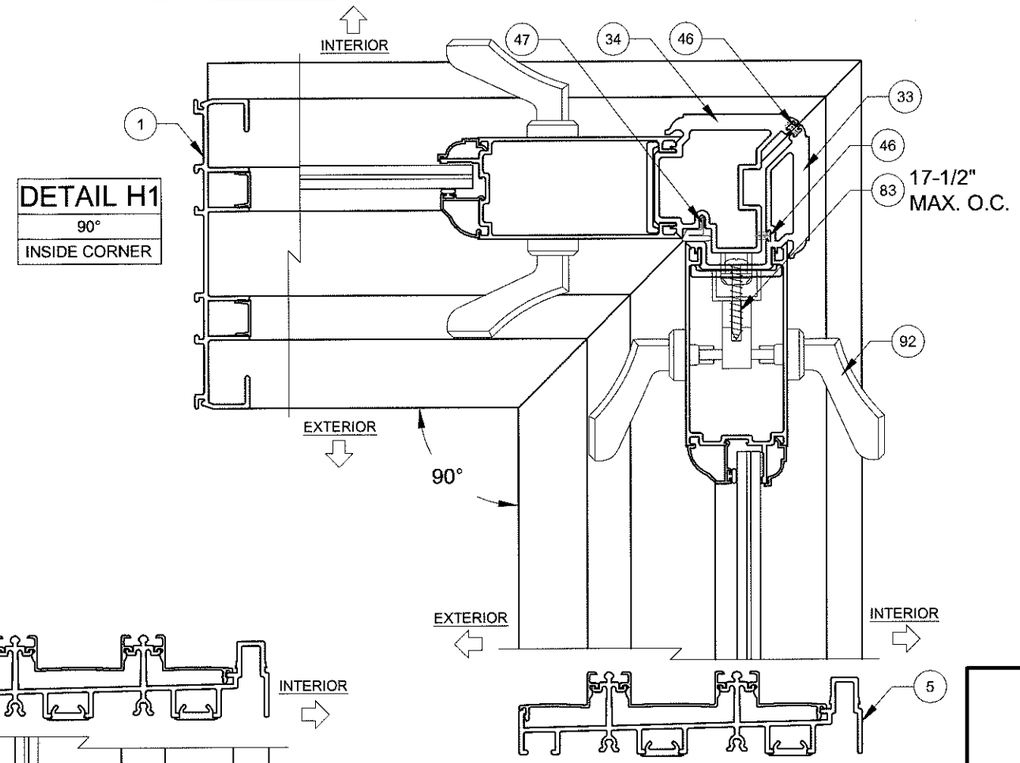

DETAIL H1
90°
INSIDE CORNER

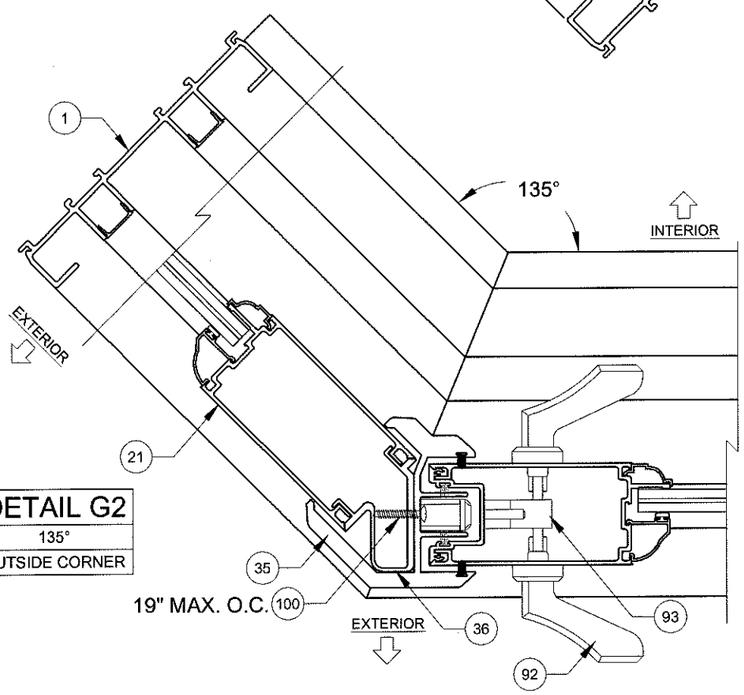

DETAIL G2
135°
OUTSIDE CORNER

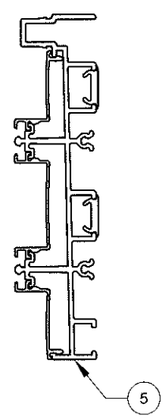

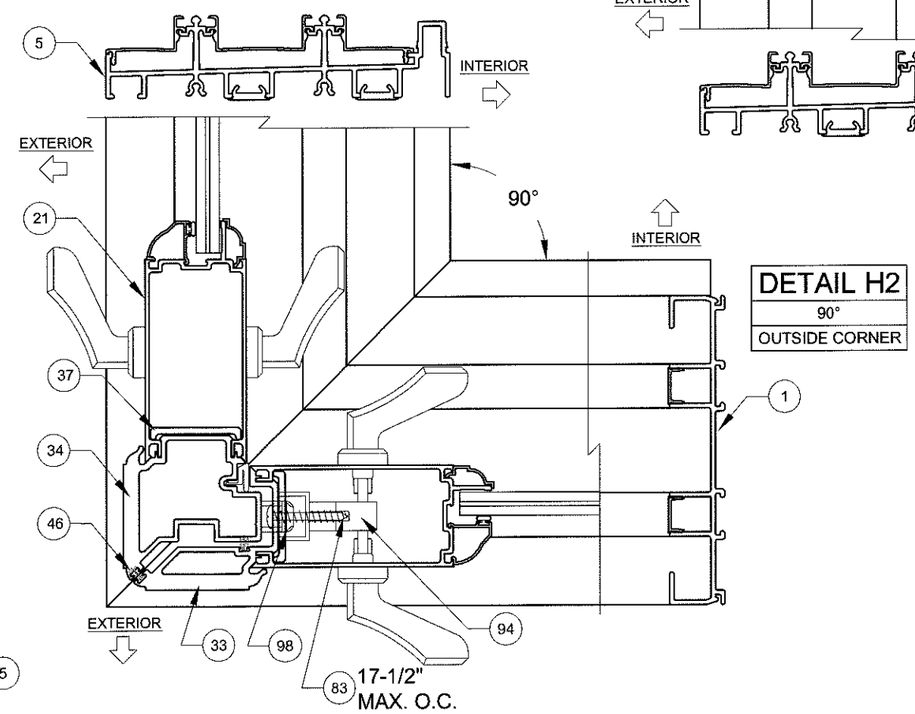

DETAIL H2
90°
OUTSIDE CORNER

NOTES
1) DETAILS APPLY TO 2, 3 AND 4 TRACK CONFIGURATIONS.
2) SEE SHEETS 14-15 FOR ANCHOR LOCATION & SPACING. FOR ANCHOR QUANTITIES, SEE TABLES 1-3.
3) CORNER ASTRAGAL MAY BE EITHER TO THE INTERIOR OR EXTERIOR, DEPENDING ON CONFIGURATION.

Title	ALUMINUM SLIDING GLASS DOOR NOA (LM)					Date	10/05/15		
Desc.	CORNER ASTRAGAL HORIZ. X-SECT.				Drawn By	J ROSOWSKI			
Rev.	NO CHANGES THIS SHEET.					Rev. Date	04/05/17		
Series	SGD-780	Scale	NTS	Sheet	5 OF 18	DWG No.	MD-780.0	Rev. No.	B

1070 TECHNOLOGY DR
N. VENICE, FL 34275
(941)-480-1600
CERT. OF AUTH. #29296

PRODUCT REVISED
as complying with the Florida Building Code
Acceptance No. 17-0420.04
Expiration Date 3/21/2022
Miami-Dade Product Control

ANTHONY LYNN MILLER
LICENSE
No. 58705
7/17/17
STATE OF FLORIDA
PROFESSIONAL ENGINEER

A. LYNN MILLER, P.E.
P.E.# 58705

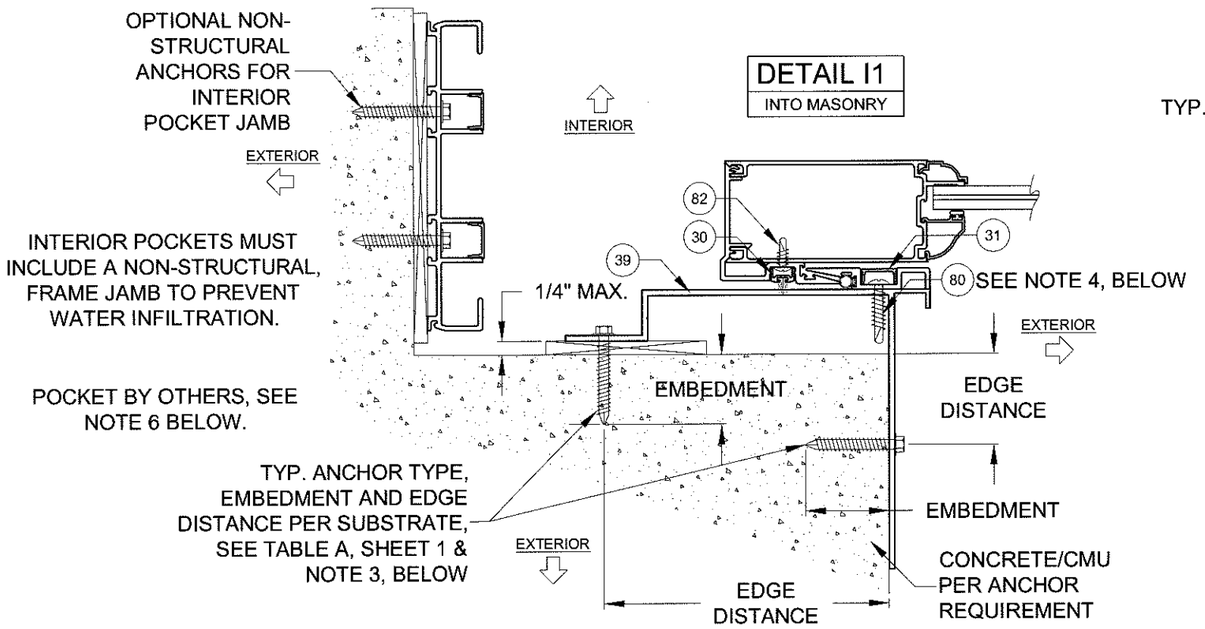

INTERIOR POCKET

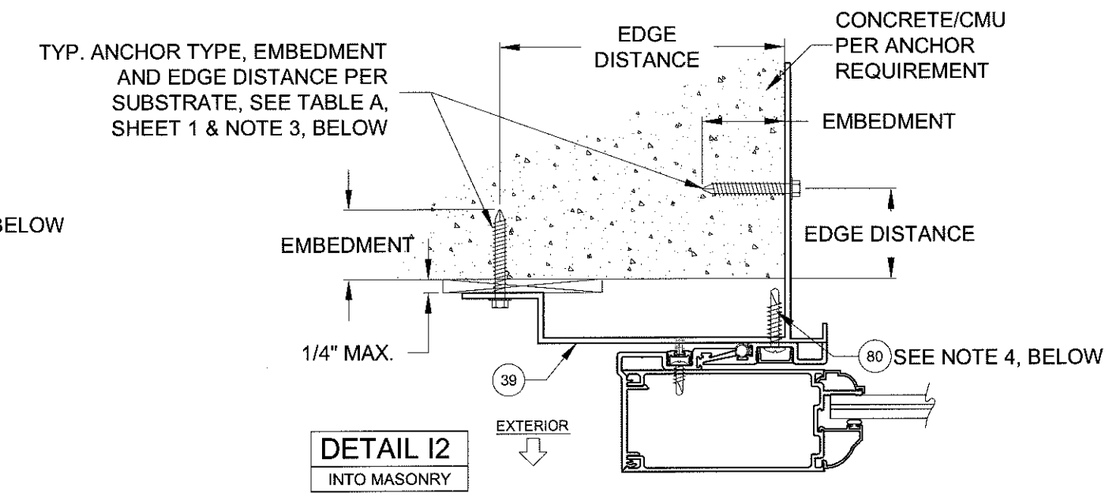

EXTERIOR POCKET

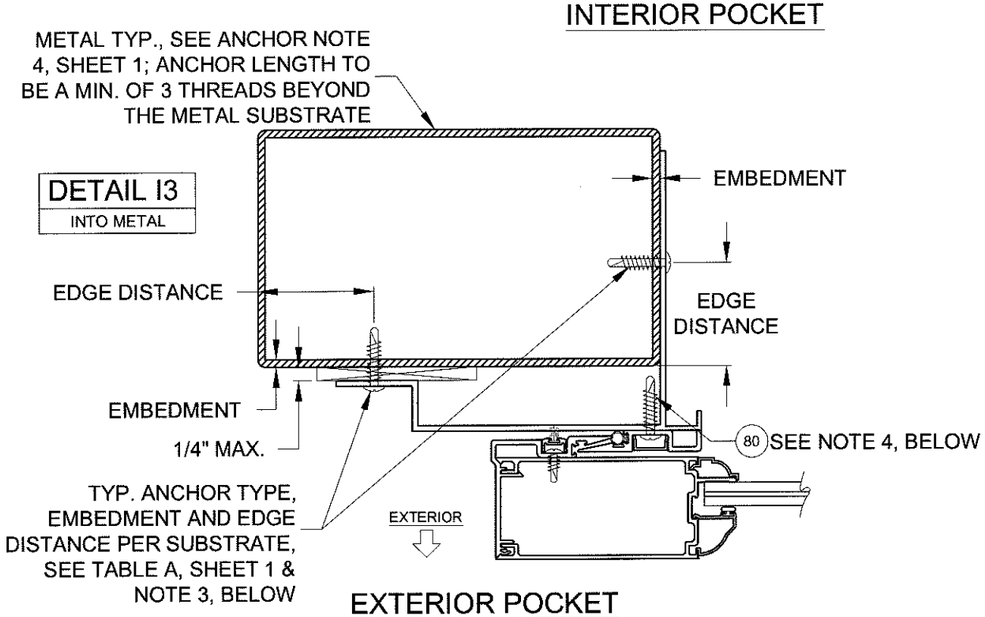

EXTERIOR POCKET

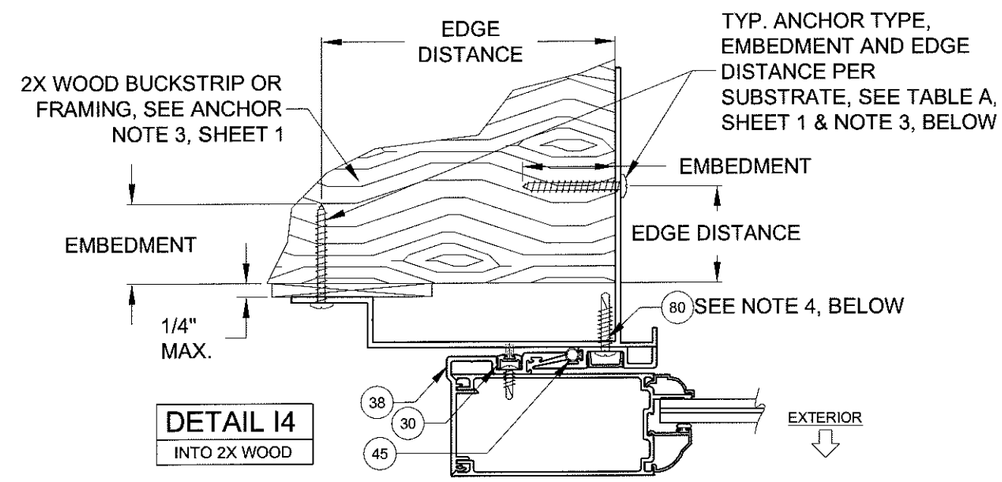

EXTERIOR POCKET

NOTES
1) DETAILS APPLY TO 2, 3 AND 4 TRACK CONFIGURATIONS.
2) REFER TO ANCHOR NOTES, SHEET 1.
3) SEE SHEET 15 FOR ANCHOR LOCATION & SPACING.
4) #10 X 3/4" SMS @ MAX. 5-1/2" FROM ENDS & 12" MAX. O.C.
5) INTERIOR OR EXTERIOR POCKETS APPLICABLE FOR ALL INSTALLATION METHODS.
6) POCKET WALL OR CAVITY IS NOT PART OF THIS APPROVAL AND IS TO BE DESIGNED BY OTHERS AND REVIEWED BY THE AUTHORITY HAVING JURISDICTION.

Title	ALUMINUM SLIDING GLASS DOOR NOA (LM)				Date	10/05/15	
Desc.	P-HOOK EXAMPLES, HORIZ. X-SECT.			Drawn By	J ROSOWSKI		
Rev.	NO CHANGES THIS SHEET.				Rev. Date	04/05/17	
Series	SGD-780	Scale	NTS	Sheet	6 OF 18	DWG No.	MD-780.0	Rev. No.	B

1070 TECHNOLOGY DR
N. VENICE, FL 34275
(941)-480-1600
CERT. OF AUTH. #29296

PRODUCT REVISED
as complying with the Florida Building Code
Acceptance No. 17-0420.04
Expiration Date 8/2/2022
Mirar Dade Product Control

ANTHONY LYNN MILLER
LICENSE
No. 58705
7/17/17
STATE OF FLORIDA
PROFESSIONAL ENGINEER

A. LYNN MILLER, P.E.
P.E.# 58705

TABLE 1:

Design Pressure (DP) and Anchor Quantities Required, (for all approved configurations on Sheet 2)

For corner astragal anchorage on 90° & 135° corner units, see sheets 14 & 15

Nominal Panel Width		Table applies to Glass Types 5, 6, 9 & 10 containing ANN-HS SG Laminated Glazing. Reinforcement (part #29) is not required in the Exterior Interlock	Door Unit Height																			
			80"				84"				96"				108"				120"			
			77-3/4" Panel Height**				81-3/4" Panel Height**				93-3/4" Panel Height**				105-3/4" Panel Height**				117-3/4" Panel Height**			
			Anchor Group				Anchor Group				Anchor Group				Anchor Group				Anchor Group			
			A	B	C	D	A	B	C	D	A	B	C	D	A	B	C	D	A	B	C	D
36"	28-1/8" DLO	*Design Pressure*	*+80 / -80 psf*				*+80 / -80 psf*				*+80 / -80 psf*				*+60 / -70 psf*				*+60 / -70 psf*			
		Head/Sill	C4+1	C4+1	C4+1	C4+1	C4+1	C4+1	C4+1	C4+1	C4+1	C4+1	C4+1	C4+1	C4+1	C4+1	C4+1	C4+1	C6+1	C6+1	C4+1	C4+1
		Jamb	8	6	6	6	8	8	8	8	10	8	8	8	10	8	8	8	10	10	10	10
		P-hook	4+4	4+4	4+4	4+4	4+4	4+4	4+4	4+4	4+4	4+4	4+4	4+4	5+5	5+5	5+5	5+5	5+5	5+5	5+5	5+5
42"	34-1/8" DLO	*Design Pressure*	*+80 / -80 psf*				*+80 / -80 psf*				*+80 / -80 psf*				*+60 / -70 psf*				*+60 / -70 psf*			
		Head/Sill	C4+2	C4+2	C4+2	C4+2	C4+2	C4+2	C4+2	C4+2	C6+2	C6+2	C4+2	C4+2	C6+2	C6+2	C6+1	C6+1	C6+2	C6+2	C6+1	C6+1
		Jamb	8	8	6	6	8	8	8	8	10	10	8	8	10	10	8	8	12	10	10	10
		P-hook	4+4	4+4	4+4	4+4	4+4	4+4	4+4	4+4	4+4	4+4	4+4	4+4	5+5	5+5	5+5	5+5	5+5	5+5	5+5	5+5
48"	40-1/8" DLO	*Design Pressure*	*+80 / -80 psf*				*+80 / -80 psf*				*+80 / -80 psf*				*+60 / -70 psf*				*+60 / -70 psf*			
		Head/Sill	C4+2	C4+2	C4+2	C4+2	C6+2	C6+2	C4+2	C4+2	C6+2	C6+2	C6+2	C6+2	C6+2	C6+2	C6+2	C6+2	C6+2	C6+2	C6+2	C6+2
		Jamb	8	8	6	6	10	8	8	8	10	10	8	8	12	10	8	8	12	12	10	10
		P-hook	4+4	4+4	4+4	4+4	4+4	4+4	4+4	4+4	4+4	4+4	4+4	4+4	5+5	5+5	5+5	5+5	5+5	5+5	5+5	5+5
54"	46-1/8" DLO	*Design Pressure*	*+80 / -80 psf*				*+80 / -80 psf*				*+80 / -80 psf*				Not available in these sizes							
		Head/Sill	C4+3	C4+3	C4+2	C4+2	C6+3	C6+3	C4+2	C4+2	C6+3	C6+3	C6+2	C6+2								
		Jamb	10	8	6	6	10	8	8	8	12	10	8	8								
		P-hook	4+4	4+4	4+4	4+4	4+4	4+4	4+4	4+4	4+4	4+4	4+4	4+4								
60"	52-1/8" DLO	*Design Pressure*	*+80 / -80 psf*				*+80 / -80 psf*				*+76.2 / -76.2 psf **											
		Head/Sill	C6+3	C6+3	C4+3	C4+3	C6+3	C6+3	C6+3	C6+3	C6+3	C6+3	C6+3	C6+3								
		Jamb	10	8	6	6	10	10	8	8	12	12	8	8								
		P-hook	4+4	4+4	4+4	4+4	4+4	4+4	4+4	4+4	5+5	5+5	4+4	4+4								

*+/- 80.0 PSF FOR GLASS TYPES 6, 9 & 10. **SEE FORMULAS BELOW

ANCHORAGE TYPE PER SUBSTRATE REQUIRED TO ACHIEVE THE DESIGN PRESSURE, USING THE ANCHOR QUANTIES LISTED BELOW. SEE TABLE A, SHEET 1 FOR COMPLETE ANCHOR LIMITATIONS.

THE MAXIMUM DP AT THESE ANCHOR QUANTITIES. ADDITIONALLY, THE MAXIMUM POSITIVE DP DUE TO THE SILL HEIGHT MUST ALSO BE CONSIDERED, SEE TABLE C1, THIS SHEET.

TOTAL # OF ANCHORS CLUSTERED THROUGH THE HEAD & SILL AT EACH PANEL MEETING POINT. (EX: FOR C4+1, 4 ANCHORS REQUIRED AT PANEL MEETING POINT AND 1 ANCHOR REQUIRED AT MIDSPAN OF PANEL).

TOTAL # OF ANCHORS THROUGH THE JAMB.

THE # OF ANCHORS THROUGH THE P-HOOK INSTALLED FROM THE INTERIOR + THE # OF ANCHORS INSTALLED FROM THE EXTERIOR.

TABLE NOTES:

1) IF WATER INFILTRATION RESISTANCE IS REQUIRED,THE LESSER VALUES OF EITHER TABLE 1 OR 2 AND TABLE C1 DETERMINES THE WATER LIMITED (+) DP.

2) THE 1-5/8" SILL RISER, #12, MAY ONLY BE USED WHERE WATER INFILTRATION RESISTANCE IS NOT REQUIRED OR OVERHANG IS PER FIG 1. IF SO, +DP'S SHOWN IN TABLES 1 OR 2 MAY BE USED.

3) SEE SILL RISER TYPES ON SHEET 4.

4) DETAILS APPLY TO 2, 3 AND 4 TRACK CONFIGURATIONS.

5) REFER TO ANCHOR NOTES, SHEET 1.

6) SEE SHEETS 12-15 FOR ANCHOR LOCATIONS & SPACING.

USED IN EXAMPLE 2, SHEET 10

TABLE 2:

Design Pressure (DP) and Anchor Quantities Required,

(for all approved configurations on Sheet 2)

For corner astragal anchorage on 90° & 135° corner units, see sheets 14 & 15

Nominal Panel Width		Table applies to Glass Types 1 - 4 containing ANN-HS PVB Glazing. Reinforcement (part #29) is not required in the Exterior Interlock.	Door Unit Height							
			80"				96"			
			77-3/4" Panel Height**				93-3/4" Panel Height**			
			Anchor Group				Anchor Group			
			A	B	C	D	A	B	C	D
36"	28-1/8" DLO	*Design Pressure*	*+65 / -65 psf*				*+65 / -65 psf*			
		Head/Sill	C4+1	C4+1	C4+1	C4+1	C4+1	C4+1	C4+1	C4+1
		Jamb	6	6	6	6	8	8	8	8
		P-hook	4+4	4+4	4+4	4+4	4+4	4+4	4+4	4+4
42"	34-1/8" DLO	*Design Pressure*	*+65 / -65 psf*				*+65 / -65 psf*			
		Head/Sill	C4+1	C4+1	C4+1	C4+1	C4+1	C4+1	C4+1	C4+1
		Jamb	6	6	6	6	8	8	8	8
		P-hook	4+4	4+4	4+4	4+4	4+4	4+4	4+4	4+4
48"	40-1/8" DLO	*Design Pressure*	*+65 / -65 psf*				*+65 / -65 psf*			
		Head/Sill	C4+2	C4+2	C4+2	C4+2	C4+2	C4+2	C4+2	C4+2
		Jamb	8	6	6	6	10	8	8	8
		P-hook	4+4	4+4	4+4	4+4	4+4	4+4	4+4	4+4

**SEE FORMULAS BELOW

DLO WIDTH = NOM. PANEL WIDTH - 7.875"
DLO HEIGHT (STD. BOT. RAIL, #22) = DOOR UNIT HEIGHT - 13.47"
DLO HEIGHT (TALL BOT. RAIL, #23) = DOOR UNIT HEIGHT - 17.29"
PANEL HEIGHT = DOOR UNIT HEIGHT - 2.25"

TABLE C1:

Water-Limited (+) Design Pressure		
Sill Riser	Total Sill Height	Max. (+) DP Allowed
12	1-5/8"	See Note 2
13	2-3/4"	+50.0 psf
14	3-1/2"	+73.3 psf
15	4-1/2"	+80.0 psf
16	5-1/4"	+80.0 psf

FIG 1:

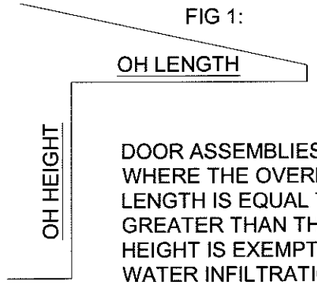

DOOR ASSEMBLIES INSTALLED WHERE THE OVERHANG (OH) LENGTH IS EQUAL TO OR GREATER THAN THE OVERHANG HEIGHT IS EXEMPTED FROM WATER INFILTRATION RESISTANCE.

PRODUCT REVISED as complying with the Florida Building Code
Acceptance No 17-0420.04
Expiration Date 3/2/2022
Product Control

ANTHONY LYNN MILLER LICENSE No. 58705 STATE OF FLORIDA PROFESSIONAL ENGINEER
5/17/17

A. LYNN MILLER, P.E.
P.E.# 58705

Title	ALUMINUM SLIDING GLASS DOOR NOA (LM)			Date	10/05/15
Desc.	DP & ANCHOR QUANTITY TABLE			Drawn By	J ROSOWSKI
Rev.	UPDATED TABLES 1 & 2.			Rev. Date	04/05/17
Series	SGD-780	Scale NTS	Sheet 7 OF 18	DWG No. MD-780.0	Rev. No. B

1070 TECHNOLOGY DR
N. VENICE, FL 34275
(941)-480-1600

CERT. OF AUTH. #29296

TABLE 3:

Design Pressure (DP) and Anchor Quantities Required, (for all approved configurations on Sheet 2)

For corner astragal anchorage on 90° & 135° corner units, see sheets 14 & 15

Table applies to Glass Types 7, 8, 11 & 12

Reinforcement (part #29) is required in the Exterior Interlock

Nominal Panel Width		Door Unit Height	80"				84"				96"				108"				120"				132"				144"			
			77-3/4" Panel Height**				81-3/4" Panel Height**				93-3/4" Panel Height**				105-3/4" Panel Height**				117-3/4" Panel Height**				129-3/4" Panel Height**				141-3/4" Panel Height**			
			Anchor Group				Anchor Group				Anchor Group				Anchor Group				Anchor Group				Anchor Group				Anchor Group			
			A	B	C	D	A	B	C	D	A	B	C	D	A	B	C	D	A	B	C	D	A	B	C	D	A	B	C	D
30"	22-1/8" DLO	*Design Pressure*	*+105 / -115 psf*				*+105 / -115 psf*				*+105 / -115 psf*				*+105 / -115 psf*				*+105 / -109 psf*				*+98 / -98 psf*				*+89 / -89 psf*			
		Head/Sill	C4+1	C4+1	C4+1	C4+1	C6+1	C6+1	C4+1	C4+1	C6+1	C6+1	C6+1	C6+1	C6+1	C6+1	C6+1	C6+1	C6+1	C6+1	C6+1	C6+1	C6+1	C6+1	C6+1	C6+1	C6+1	C6+1	C6+1	C6+1
		Jamb	10	8	6	6	10	8	8	8	10	10	8	8	12	12	8	8	14	12	10	10	14	12	10	10	14	12	12	12
		P-hook	4+4	4+4	4+4	4+4	4+4	4+4	4+4	4+4	4+4	4+4	4+4	4+4	5+5	5+5	5+5	5+5	5+5	5+5	5+5	5+5	6+6	6+6	6+6	6+6	6+6	6+6	6+6	6+6
36"	28-1/8" DLO	*Design Pressure*	*+105 / -115 psf*				*+105 / -115 psf*				*+105 / -115 psf*				*+105 / -115 psf*				*+105 / -115 psf*				*+101.6 / -111.2 psf*				*+77.9 / -85.3 psf*			
		Head/Sill	C6+2	C6+2	C6+2	C6+2	C6+2	C6+2	C6+2	C6+2	C6+2	C6+2	C6+2	C6+2	C8+2	C8+2	C6+2	C6+2	C8+2	C8+2	C6+2	C6+2	C8+2	C8+2	C8+2	C8+2	C8+1	C8+1	C8+1	C8+1
		Jamb	10	10	8	6	10	10	8	8	12	12	10	8	14	12	10	8	16	14	12	10	18	16	12	10	14	14	12	12
		P-hook	4+4	4+4	4+4	4+4	4+4	4+4	4+4	4+4	5+5	5+5	5+5	4+4	5+5	5+5	5+5	5+5	6+6	6+6	6+6	5+5	6+6	6+6	6+6	6+6	6+6	6+6	6+6	6+6
42"	34-1/8" DLO	*Design Pressure*	*+105 / -115 psf*				*+105 / -115 psf*				*+105 / -115 psf*				*+105 / -115 psf*				*+105 / -115 psf*				*+88 / -96.4 psf*				*+67.3 / -73.8 psf*			
		Head/Sill	C6+2	C6+2	C6+2	C6+2	C6+2	C6+2	C6+2	C6+2	C8+2	C8+2	C6+2	C6+2	C8+2	C8+2	C8+2	C8+2	C10+2	C10+2	C8+2	C8+2	C8+2	C8+2	C8+2	C8+2	C8+2	C8+2	C6+2	C6+2
		Jamb	12	10	8	6	12	10	8	8	14	12	10	8	16	14	12	10	18	16	12	10	18	16	12	10	14	14	12	12
		P-hook	4+4	4+4	4+4	4+4	4+4	4+4	4+4	4+4	5+5	5+5	5+5	4+4	6+6	6+6	6+6	5+5	7+7	7+7	6+6	5+5	6+6	6+6	6+6	6+6	6+6	6+6	6+6	6+6
48"	40-1/8" DLO	*Design Pressure*	*+105 / -115 psf*				*+105 / -115 psf*				*+105 / -115 psf*				*+105 / -115 psf*				*+105 / -115 psf*				*+78 / -85.4 psf*				*+59.6 / -65.2 psf*			
		Head/Sill	C6+3	C6+3	C6+3	C6+3	C6+3	C6+3	C6+3	C6+3	C8+3	C8+3	C8+3	C8+3	C10+3	C10+3	C8+3	C8+3	C10+3	C10+3	C10+3	C10+3	C8+2	C8+2	C8+2	C8+2	C8+2	C8+2	C6+2	C6+2
		Jamb	12	10	8	8	12	12	10	8	16	14	10	8	18	16	12	10	20	18	14	12	16	16	12	10	14	12	12	12
		P-hook	4+4	4+4	4+4	4+4	5+5	5+5	5+5	4+4	6+6	6+6	5+5	4+4	6+6	6+6	6+6	5+5	7+7	7+7	7+7	5+5	6+6	6+6	6+6	6+6	6+6	6+6	6+6	6+6
54"	46-1/8" DLO	*Design Pressure*	*+105 / -115 psf*				*+105 / -115 psf*				*+105 / -115 psf*				*+105 / -115 psf*				*+94.8 / -103.8 psf*				Not available in these sizes							
		Head/Sill	C6+3	C6+3	C6+3	C6+3	C8+3	C8+3	C6+3	C6+3	C8+3	C8+3	C8+3	C8+3	C10+3	C10+3	C8+3	C8+3	C10+3	C10+3	C10+3	C10+3								
		Jamb	12	12	10	8	14	12	10	8	16	14	12	10	18	16	14	10	20	18	14	12								
		P-hook	5+5	5+5	5+5	4+4	5+5	5+5	5+5	4+4	6+6	6+6	6+6	4+4	7+7	7+7	7+7	5+5	7+7	7+7	7+7	5+5								
60"	52-1/8" DLO	*Design Pressure*	*+105 / -115 psf*				*+105 / -115 psf*				*+105 / -115 psf*				*+103.4 / -107 psf*				*+86.7 / -95 psf*											
		Head/Sill	C8+4	C8+4	C6+4	C6+4	C8+4	C8+4	C6+4	C6+4	C8+4	C8+4	C8+4	C8+4	C10+4	C10+4	C10+4	C10+4	C10+3	C10+3	C10+3	C10+3								
		Jamb	14	12	10	8	14	12	10	8	18	16	12	10	20	18	14	12	20	18	14	12								
		P-hook	5+5	5+5	5+5	4+4	5+5	5+5	5+5	4+4	6+6	6+6	6+6	4+4	7+7	7+7	7+7	5+5	7+7	7+7	7+7	5+5								

**SEE FORMULAS BELOW

USED IN EXAMPLE 1, SHEET 9

ANCHORAGE TYPE PER SUBSTRATE REQUIRED TO ACHIEVE THE DESIGN PRESSURE, USING THE ANCHOR QUANTIES LISTED BELOW. SEE TABLE A, SHEET 1 FOR COMPLETE ANCHOR LIMITATIONS.

THE MAXIMUM DP AT THESE ANCHOR QUANTITIES. ADDITIONALLY, THE MAXIMUM POSITIVE DP DUE TO THE SILL HEIGHT MUST ALSO BE CONSIDERED, SEE TABLE C2, THIS SHEET.

TOTAL # OF ANCHORS CLUSTERED THROUGH THE HEAD & SILL AT EACH PANEL MEETING POINT. (EX: FOR C6+1, 6 ANCHORS REQUIRED AT PANEL MEETING POINT AND 1 ANCHOR REQUIRED AT MIDSPAN OF PANEL).

TOTAL # OF ANCHORS THROUGH THE JAMB.

THE # OF ANCHORS THROUGH THE P-HOOK INSTALLED FROM THE INTERIOR + THE # OF ANCHORS INSTALLED FROM THE EXTERIOR.

TABLE NOTES:

1) IF WATER INFILTRATION RESISTANCE IS REQUIRED, THE LESSER VALUE OF TABLE 3 AND TABLE C2 DETERMINES THE WATER LIMITED (+) DP.

2) THE 1-5/8" SILL RISER, #12, MAY ONLY BE USED WHERE WATER INFILTRATION RESISTANCE IS NOT REQUIRED OR OVERHANG IS PER FIG 1. IF SO, +DP'S SHOWN IN TABLE 3 MAY BE USED.

3) SEE SILL RISER TYPES ON SHEET 4.

4) DETAILS APPLY TO 2, 3 AND 4 TRACK CONFIGURATIONS.

5) REFER TO ANCHOR NOTES, SHEET 1.

6) SEE SHEETS 12-15 FOR ANCHOR LOCATIONS & SPACING.

DLO WIDTH = NOM. PANEL WIDTH - 7.875"
DLO HEIGHT (STD. BOT. RAIL, #22) = DOOR UNIT HEIGHT - 13.47"
DLO HEIGHT (TALL BOT. RAIL, #23) = DOOR UNIT HEIGHT - 17.29"
PANEL HEIGHT = DOOR UNIT HEIGHT - 2.25"

TABLE C2:

Water-Limited (+) Design Pressure		
Sill Riser	Total Sill Height	Max. (+) DP Allowed
12	1-5/8"	See Note 2
13	2-3/4"	+50.0 psf
14	3-1/2"	+73.3 psf
15	4-1/2"	+100.0 psf
16	5-1/4"	+105.0 psf

FIG 1:

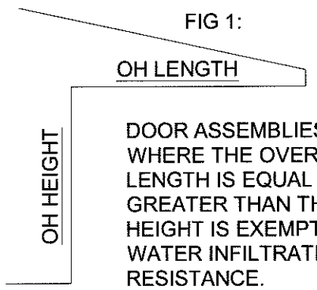

DOOR ASSEMBLIES INSTALLED WHERE THE OVERHANG (OH) LENGTH IS EQUAL TO OR GREATER THAN THE OVERHANG HEIGHT IS EXEMPTED FROM WATER INFILTRATION RESISTANCE.

PRODUCT REVISED
as complying with the Florida Building Code
Acceptance No. 17-0420.04
Expiration Date 8/2/2022
By Ichang L. Chang
Manager Dade/Product Control

ANTHONY LYNN MILLER
LICENSE
No. 58705
7/17/17
STATE OF FLORIDA
PROFESSIONAL ENGINEER

A. LYNN MILLER, P.E.
P.E.# 58705

Title	ALUMINUM SLIDING GLASS DOOR NOA (LM)			Date	10/05/15		
Desc.	DP & ANCHOR QUANTITY TABLE			Drawn By	J ROSOWSKI		
Rev.	UPDATED TABLE 3.			Rev. Date	04/05/17		
Series	SGD-780	Scale	NTS	Sheet	8 OF 18	DWG No.	MD-780.0	Rev. No.	B

1070 TECHNOLOGY DR
N. VENICE, FL 34275
(941)-480-1600
CERT. OF AUTH. #29296

EXAMPLE 1:

3-PANEL, 3 TRACK, STRAIGHT CONFIGURATION - PXXX,
INTERIOR MOUNT POCKET,
48" X 80" NOM. PANELS, LAMINATED, IG GLAZING,
ANCHOR GROUP B IN WOOD SUBSTRATE,
PROJECT DESIGN PRESSURE REQUIRED: +98.2/-108.6 PSF

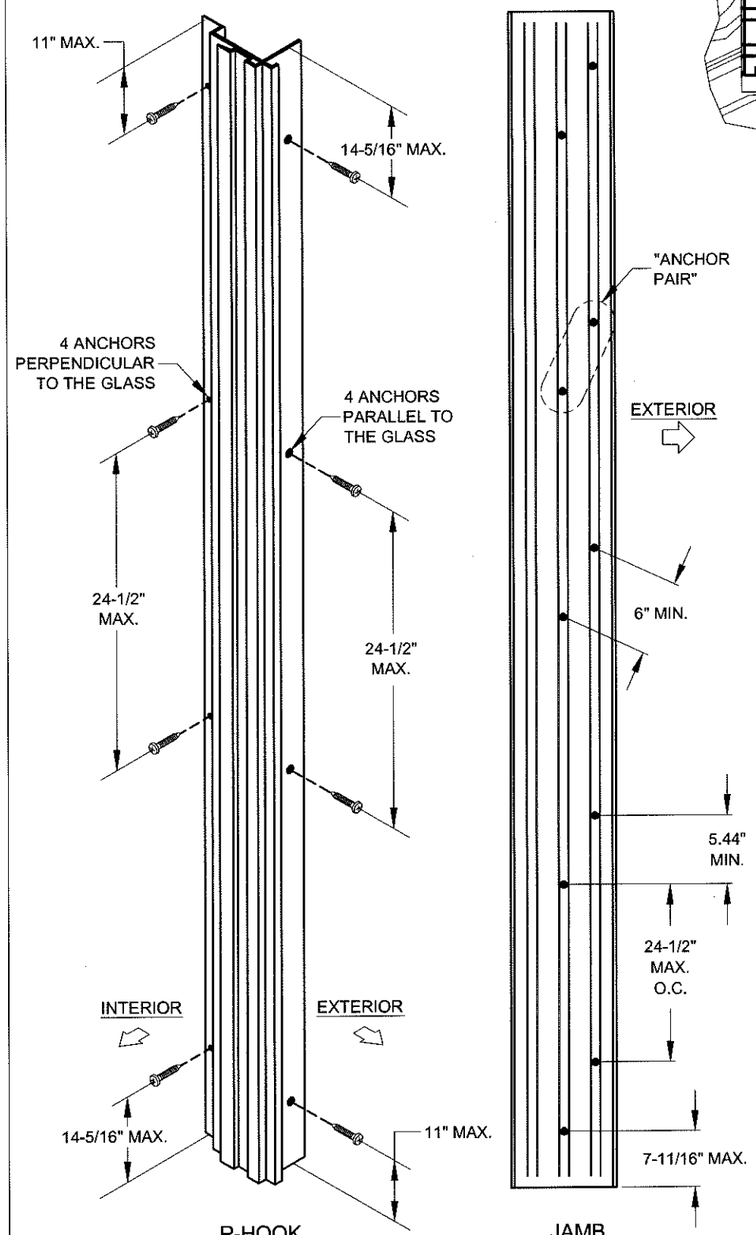

P-HOOK ANCHORAGE DETAILS

JAMB ANCHORAGE DETAILS

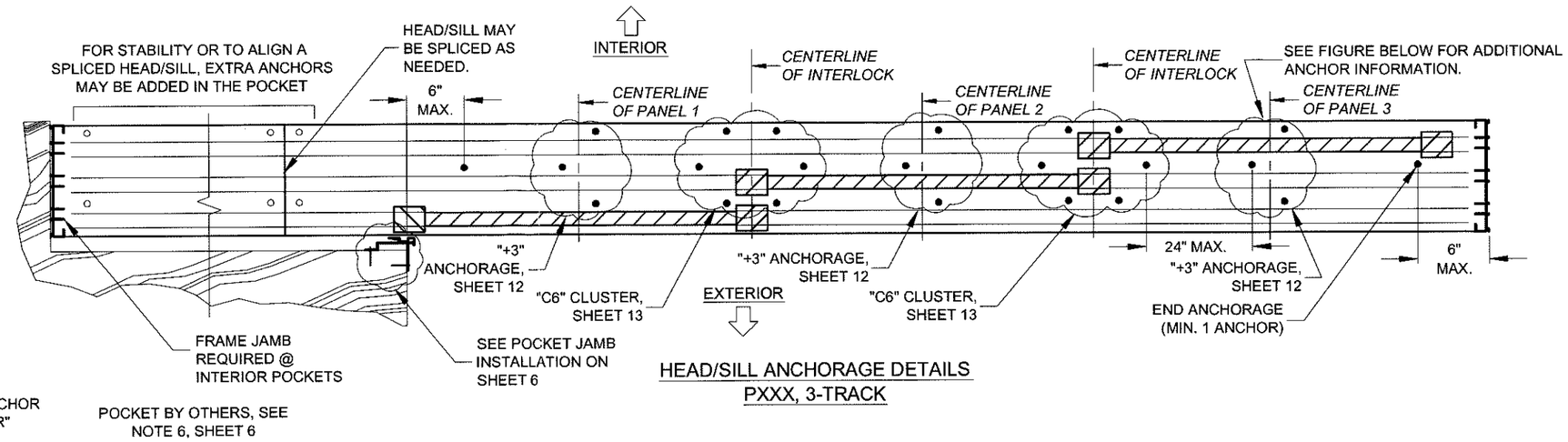

HEAD/SILL ANCHORAGE DETAILS
PXXX, 3-TRACK

USER INSTRUCTIONS:

1) KNOWING THE PRODUCT'S REQUIREMENTS, SCAN THROUGH TABLES 1-3 FOR A DESIGN PRESSURE THAT MEETS OR EXCEEDS THE REQUIREMENT OF +98.2/-108.6 AT A NOM. PANEL SIZE OF 48" X 80". FROM TABLE 3, SHEET 8, THE DESIGN PRESSURE IS +105/-115 WHICH EXCEEDS THE PROJECT DESIGN PRESSURE REQUIREMENTS.

FOR WOOD INSTALLATION USING ANY ANCHOR IN GROUP B (SEE TABLE A), TABLE 3 SHOWS ANCHOR REQUIREMENTS OF:

Head/Sill	C6+3
Jamb	10
P-hook	4+4

2) ANCHOR LOCATION DETAILS, (AS SHOWN ON THIS SHEET) CAN BE FOUND ON:
HEAD/SILL: SHEET 13 FOR THE "C6" CLUSTER ANCHORS AT INTERLOCK, SHEET 12 FOR THE INTERMEDIATE "+3" ANCHORS LOCATED AT THE CENTERLINE OF ALL 3 PANELS.
JAMB: 5 PAIRS OF ANCHORS = 10 TOTAL ANCHORS; REFER TO SHEET 12 FOR GENERAL LAYOUT.
P-HOOK: 4 ANCHORS PERPENDICULAR TO GLASS AND 4 ANCHORS PARALLEL TO GLASS; REFER TO SHEET 15 FOR GENERAL LAYOUT.

3) INSTALLATION DETAILS INTO WOOD CAN BE FOUND ON:
HEAD/SILL & JAMB: SHEETS 3 & 4
P-HOOK: SHEET 6

FOR PRODUCT REFERENCES, ALSO SEE:
A) SHEET 2 FOR ALLOWABLE CONFIGURATIONS AND EXACT LOCATIONS OF CROSS-SECTION DRAWINGS.
B) SHEET 11 FOR SPECIFIC GLAZING TYPES.
C) SHEET 16 FOR ALLOWABLE PANEL TYPES AND CALL NAMES.
D) SHEETS 4 & 17 FOR EXTRUSION CROSS-SECTION DRAWINGS.
E) SHEET 18 FOR A BILL OF MATERIALS.

END PANEL ANCHOR EXCEPTION, ("+1" ANCHORAGE ONLY):

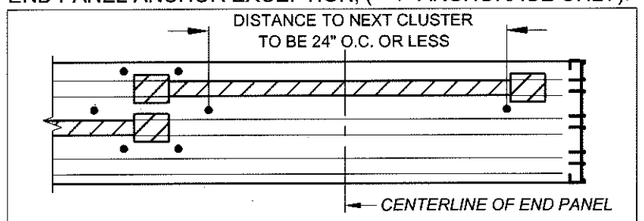

ANCHORS AT THE MIDPOINT OF END PANELS ARE ONLY REQUIRED IF THE O.C. DISTANCE TO THE NEXT ANCHOR CLUSTER IS OVER 24", OTHERWISE ANCHORS ARE NOT REQUIRED AT THE MIDSPAN AS PER THE FIGURE ABOVE:

PRODUCT REVIEWED as complying with the Florida Building Code
Acceptance No. 17-0420.04
Expiration Date 8/2/2022
Building Code Product Control

ANTHONY LYNN MILLER LICENSE No. 58705 STATE OF FLORIDA PROFESSIONAL ENGINEER

A. LYNN MILLER, P.E.
P.E.# 58705

Title	ALUMINUM SLIDING GLASS DOOR NOA (LM)			Date	10/05/15
Desc.	STRAIGHT DOOR EXAMPLE			Drawn By	J ROSOWSKI
Rev.	NO CHANGES THIS SHEET.			Rev. Date	04/05/17
Series	SGD-780	Scale NTS	Sheet 9 OF 18	DWG No. MD-780.0	Rev. No. B

1070 TECHNOLOGY DR
N. VENICE, FL 34275
(941)-480-1600
CERT. OF AUTH. #29296

EXAMPLE 2:

5-PANEL, 2 TRACK,
90° OUTSIDE CORNER - PXX/XXO,
EXTERIOR MOUNT POCKET,
54" X 84" NOM. PANELS, LAMINATED GLAZING
ANCHOR GROUP C IN CONCRETE SUBSTRATE
PROJECT DESIGN PRESSURE REQUIRED: +68.4/-77.1 PSF

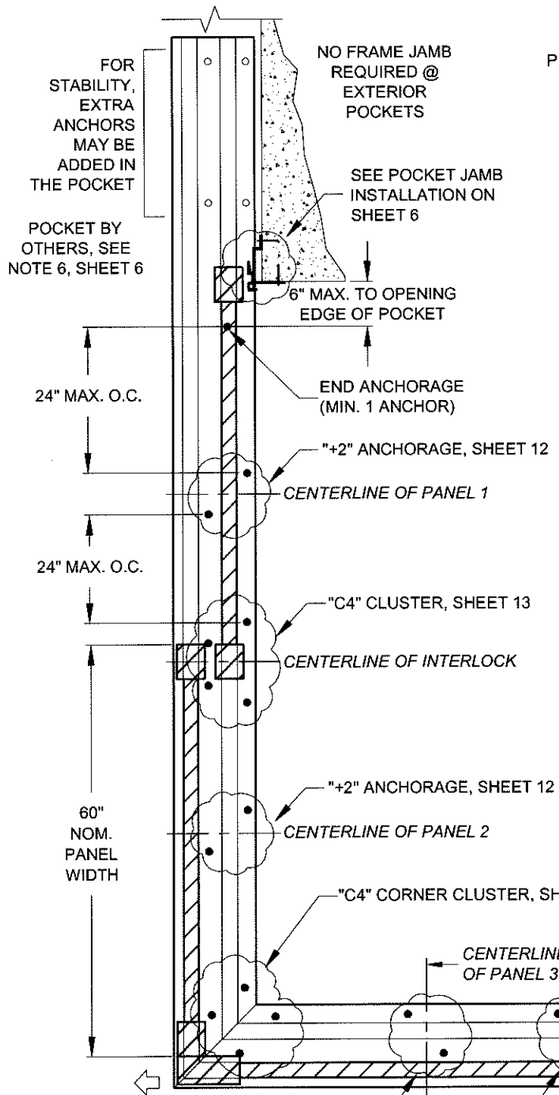

HEAD/SILL ANCHORAGE DETAILS
90° OUTSIDE CORNER, PXX/XXO, 2-TRACK

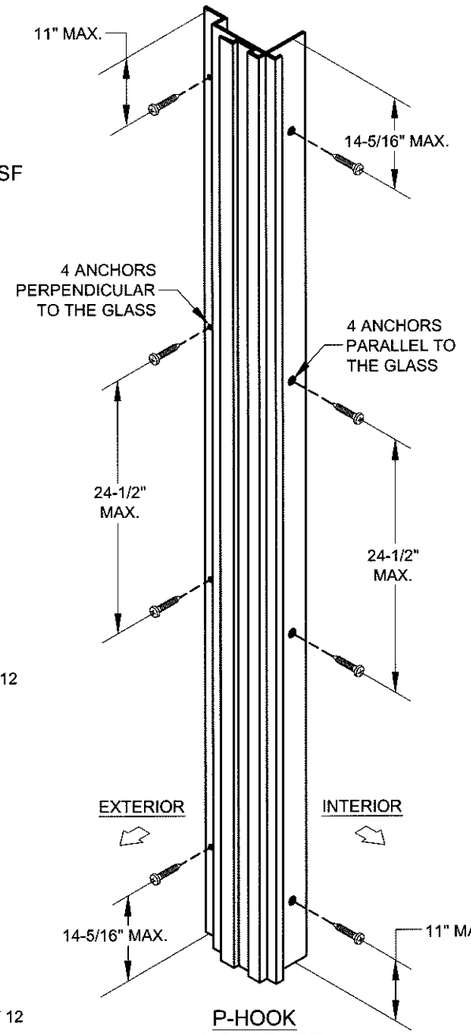

P-HOOK ANCHORAGE DETAILS

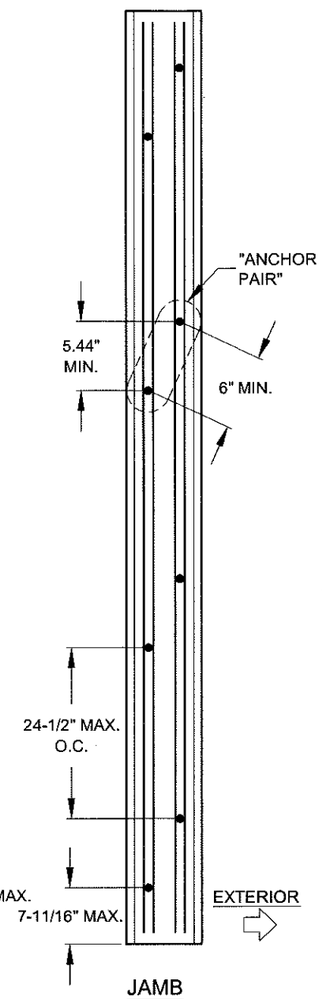

JAMB ANCHORAGE DETAILS

USER INSTRUCTIONS:

1) KNOWING THE PRODUCT REQUIREMENTS, SCAN THROUGH TABLES 1-3 FOR A DESIGN PRESSURE THAT MEETS OR EXCEEDS THE REQUIREMENT OF +68.4/-77.1 AT A NOM. PANEL SIZE OF 54" X 84". FROM TABLE 1, SHEET 7, THE DESIGN PRESSURE IS +80/-80 WHICH EXCEEDS THE PROJECT DESIGN PRESSURE REQUIREMENTS.

FOR CONCRETE INSTALLATION USING ANY ANCHOR IN GROUP C (SEE TABLE A), TABLE 1 SHOWS ANCHOR REQUIREMENTS OF:

Head/Sill	C4+2
Jamb	8
P-hook	4+4

2) ANCHOR LOCATION DETAILS, (AS SHOWN ON THIS SHEET) CAN BE FOUND ON:
HEAD/SILL: SHEET 13 FOR THE "C4" CLUSTER ANCHORS LOCATED AT THE ASTRAGAL AND INTERLOCKS, SHEET 12 FOR THE INTERMEDIATE "+2 ANCHORS.
HEAD/SILL @ CORNER: SHEET 14 FOR THE "C4" CLUSTER ANCHORS @ THE 90° CORNER.
JAMB: 4 PAIRS OF ANCHORS = 8 TOTAL ANCHORS; REFER TO SHEET 12 FOR GENERAL LAYOUT.
P-HOOK: 4 ANCHORS PERPENDICULAR TO GLASS AND 4 ANCHORS PARALLEL TO GLASS; REFER TO SHEET 15 FOR GENERAL LAYOUT.

3) INSTALLATION DETAILS INTO CONCRETE CAN BE FOUND ON:
HEAD/SILL & JAMB: SHEETS 3 & 4
P-HOOK: SHEET 6

FOR PRODUCT REFERENCES, ALSO SEE:
A) SHEET 2 FOR ALLOWABLE CONFIGURATIONS AND EXACT LOCATIONS OF CROSS-SECTION DRAWINGS.
B) SHEET 11 FOR SPECIFIC GLAZING TYPE.
C) SHEET 16 FOR ALLOWABLE PANEL TYPES AND CALL NAMES.
D) SHEETS 4 & 17 FOR EXTRUSION CROSS-SECTION DRAWINGS.
E) SHEET 18 FOR A BILL OF MATERIALS.

END PANEL ANCHOR EXCEPTION, ("+1" ANCHORAGE ONLY):

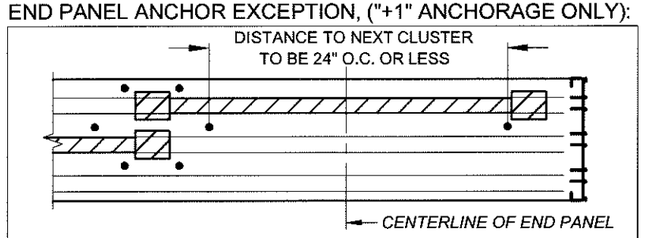

ANCHORS AT THE MIDPOINT OF END PANELS ARE ONLY REQUIRED IF THE O.C. DISTANCE TO THE NEXT ANCHOR CLUSTER IS OVER 24", OTHERWISE ANCHORS ARE NOT REQUIRED AT THE MIDSPAN AS PER THE FIGURE ABOVE:

PRODUCT REVIEWS
In compliance with the Florida Building Code
Acceptance No. 17-0420.04
Registration Date 3/27/2022

ANTHONY LYNN MILLER LICENSE No. 58705 STATE OF FLORIDA PROFESSIONAL ENGINEER
7/07/17

A. LYNN MILLER, P.E.
P.E.# 58705

Title	ALUMINUM SLIDING GLASS DOOR NOA (LM)			Date	10/05/15
Desc.	CORNER DOOR EXAMPLE		Drawn By	J ROSOWSKI	
Rev.	NO CHANGES THIS SHEET.			Rev. Date	04/05/17
Series	SGD-780	Scale NTS	Sheet 10 OF 18	DWG No. MD-780.0	Rev. No. B

1070 TECHNOLOGY DR
N. VENICE, FL 34275
(941)-480-1600

CERT. OF AUTH. #29296

Part #	Description	Material
72	Kommerling 4SG TPS Spacer System	See this Sheet for Materials
73	Quanex Super Spacer nXT with Hot Melt Butyl	
74	Quanex Duraseal Spacer	
75	Cardinal XL Edge Spacer	

REFERENCE TEST REPORTS: FTL-8717, 8968 & 8970

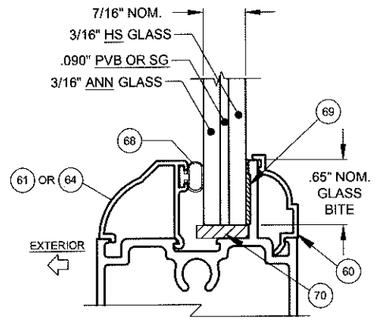

GLASS TYPE 1 (WITH PVB)
GLASS TYPE 5 (WITH SG)

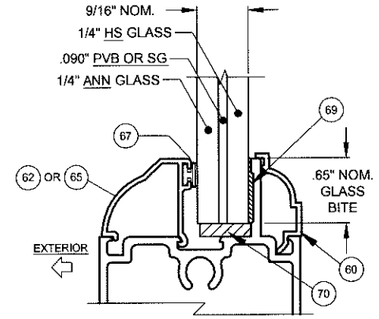

GLASS TYPE 2 (WITH PVB)
GLASS TYPE 6 (WITH SG)

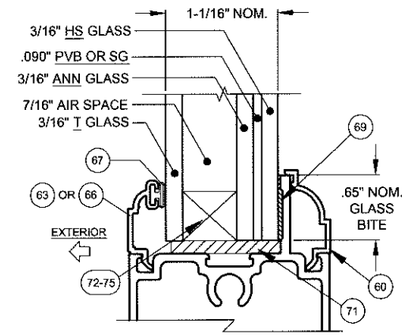

GLASS TYPE 3 (WITH PVB)
GLASS TYPE 9 (WITH SG)

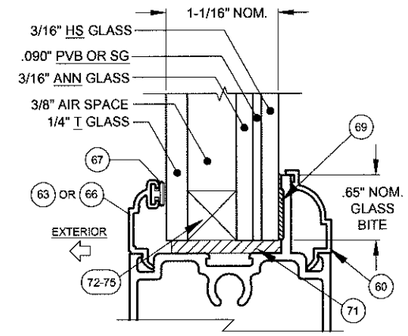

GLASS TYPE 4 (WITH PVB)
GLASS TYPE 10 (WITH SG)

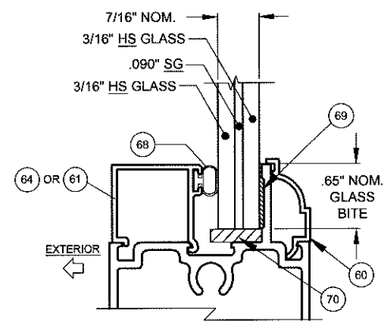

GLASS TYPE 7

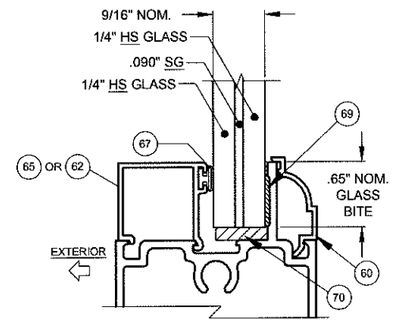

GLASS TYPE 8

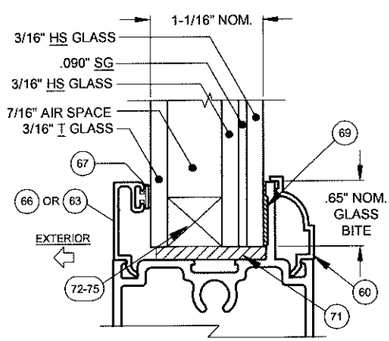

GLASS TYPE 11

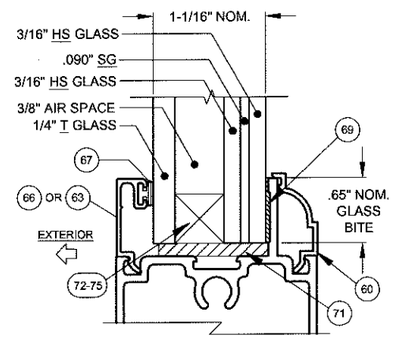

GLASS TYPE 12

"ANN" = ANNEALED
"HS" = HEAT STRENGTHENED
"T" = TEMPERED
"PVB" = .090" TROSIFOL® PVB INTERLAYER BY KURARAY AMERICA, INC.
"SG" = .090" SENTRYGLAS® INTERLAYER BY KURARAY AMERICA, INC.

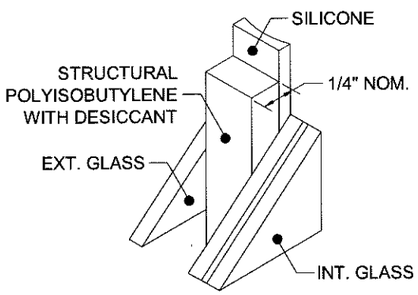

(72) KODISPACE 4SG TPS

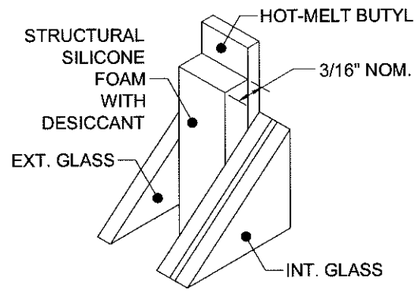

(73) SUPER SPACER® NXT™

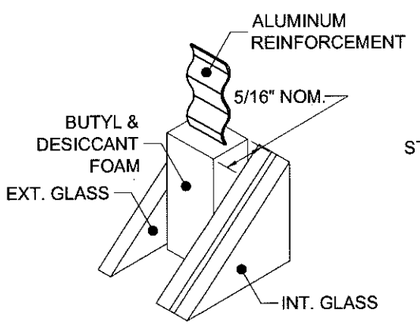

(74) DURASEAL® SPACER

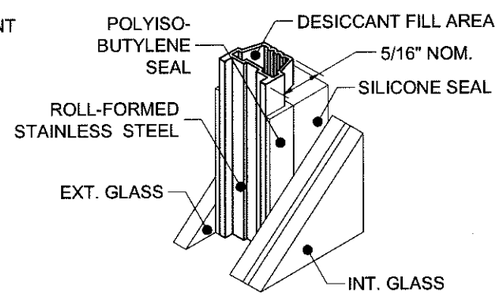

(75) XL EDGE™ SPACER

PRODUCT REVISED
as complying with the Florida Building Code
Acceptance No. 17-0420.04
Expiration Date 8/21/2022
By [signature]
Manager Product Control

ANTHONY LYNN MILLER
LICENSE
No. 58705
STATE OF FLORIDA
PROFESSIONAL ENGINEER
7/17/17

A. LYNN MILLER, P.E.
P.E.# 58705

Title	ALUMINUM SLIDING GLASS DOOR NOA (LM)	Date	10/05/15
Desc.	GLAZING & SPACER DETAILS	Drawn By	J ROSOWSKI
Rev.	ADDED SPACERS - JR	Rev. Date	04/05/17
Series	SGD-780	Scale	NTS
Sheet	11 OF 18	DWG No.	MD-780.0
Rev. No.	B		

1070 TECHNOLOGY DR
N. VENICE, FL 34275
(941)-480-1600

CERT. OF AUTH. #29296

JAMB ANCHOR LAYOUT FOR ALL DOORS:

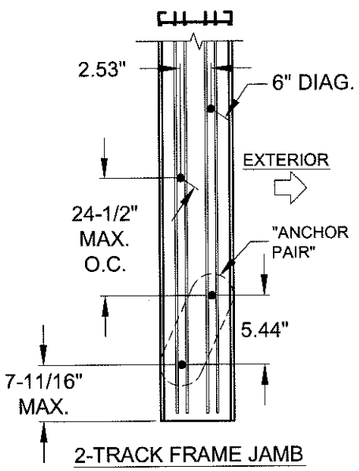

2-TRACK FRAME JAMB
ANCHOR PAIR

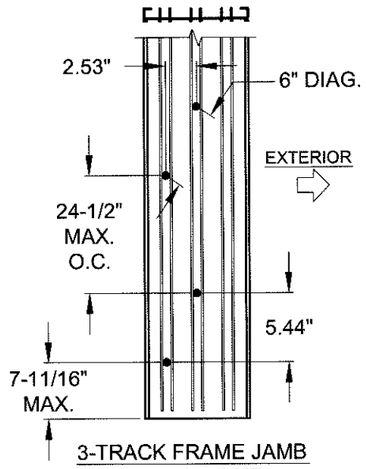

3-TRACK FRAME JAMB
ANCHOR PAIR

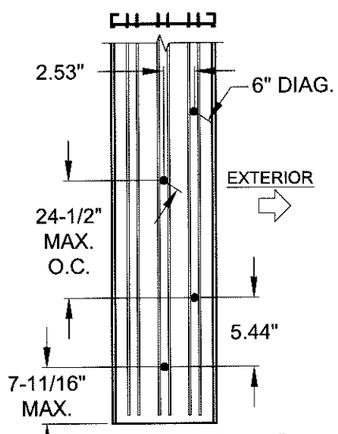

3-TRACK FRAME JAMB
ANCHOR PAIR
(ALTERNATE ANCHOR LOCATION

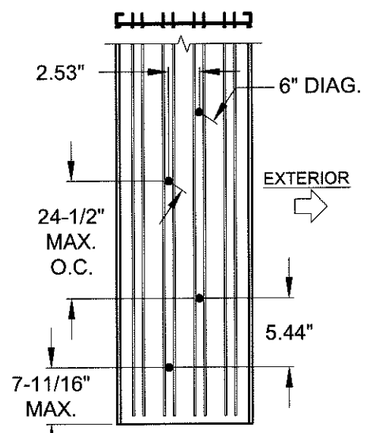

4-TRACK FRAME JAMB
ANCHOR PAIR

FIGURES PERTAINS TO THE FOLLOWING JAMB ANCHOR LOCATIONS:

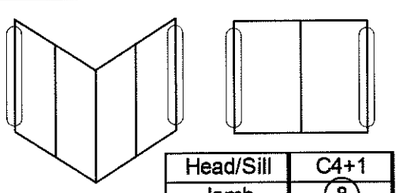

Head/Sill	C4+1
Jamb	8
P-hook	4+4

NOTES:
1) ALL DIMENSIONS SHOWN ARE BASED ON MINIMUM ALLOWED, UNLESS OTHERWISE NOTED.

2) FOR 3-TRACK JAMBS, ANCHORS MAY BE INSTALLED EITHER IN THE EXT. OR INT. TRACK.

3) MIN. OF 8 ANCHORS IN JAMB (4 PAIRS).

HEAD/SILL "+" INTERMEDIATE ANCHORS LAYOUT FOR ALL DOORS:

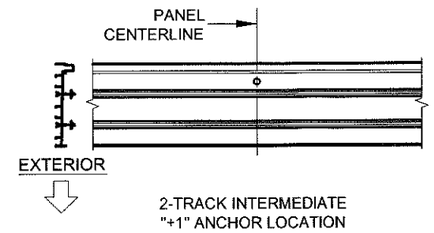

2-TRACK INTERMEDIATE
"+1" ANCHOR LOCATION

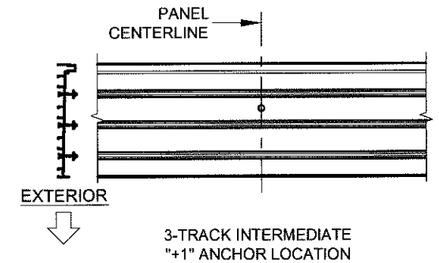

3-TRACK INTERMEDIATE
"+1" ANCHOR LOCATION

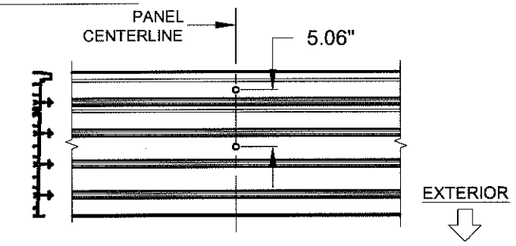

4-TRACK INTERMEDIATE
"+2" ANCHOR LOCATION
(ALSO USE WHERE "+1" ANCHOR IS REQUIRED)

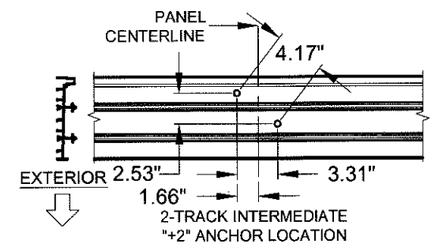

2-TRACK INTERMEDIATE
"+2" ANCHOR LOCATION

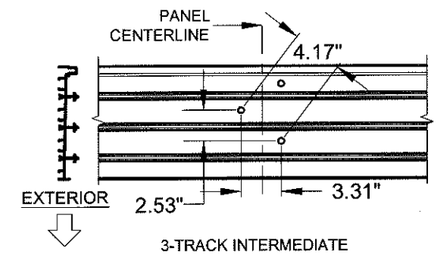

3-TRACK INTERMEDIATE
"+3"ANCHOR LOCATION
(ALSO USE WHERE "+2" ANCHOR IS REQUIRED)

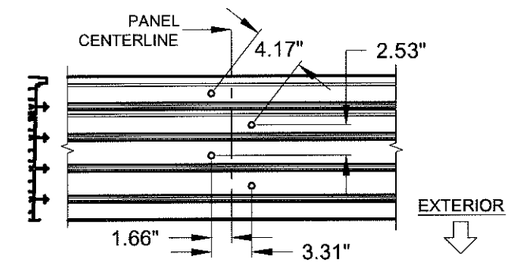

4-TRACK INTERMEDIATE
"+4"ANCHOR LOCATION
(ALSO USE WHERE "+3"
ANCHOR IS REQUIRED)

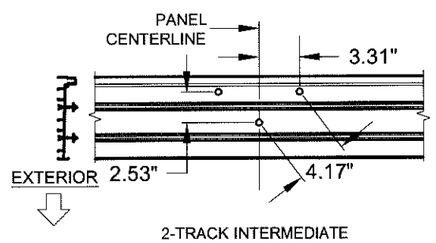

2-TRACK INTERMEDIATE
"+3" ANCHOR LOCATION

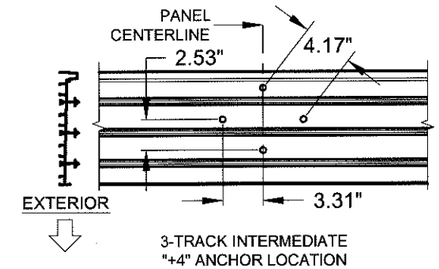

3-TRACK INTERMEDIATE
"+4" ANCHOR LOCATION

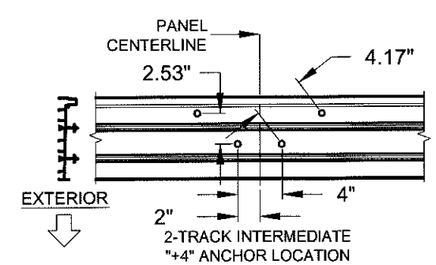

2-TRACK INTERMEDIATE
"+4" ANCHOR LOCATION

FIGURES PERTAIN TO THE FOLLOWING INTERMEDIATE ANCHOR LOCATIONS:

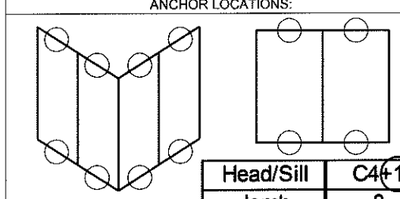

Head/Sill	C4+1
Jamb	8
P-hook	4+4

NOTES:
1) ALL DIMENSIONS SHOWN ARE BASED ON MINIMUM ALLOWED.

2) SILL SHOWN, HEAD SIMILAR.

Title	ALUMINUM SLIDING GLASS DOOR NOA (LM)					Date	10/05/15
Desc.	ANCHOR LAYOUT					Drawn By	J ROSOWSKI
Rev.	NO CHANGES THIS SHEET.					Rev. Date	04/05/17
Series	SGD-780	Scale	NTS	Sheet	12 OF 18	DWG No.	MD-780.0	Rev. No.	B

1070 TECHNOLOGY DR
N. VENICE, FL 34275
(941)-480-1600
CERT. OF AUTH. #29296

PRODUCT REVISED
as complying with the Florida
building Code
Acceptance No. 17-0420.04
Expiration Date 8/21/2022
By Ishwar L. Chand
Manager Product Control

ANTHONY LYNN MILLER
LICENSE
No. 58705
7/17/17
STATE OF FLORIDA
PROFESSIONAL ENGINEER

A. LYNN MILLER, P.E.
P.E.# 58705

HEAD/SILL CLUSTER ANCHORS LAYOUT FOR ALL DOORS:

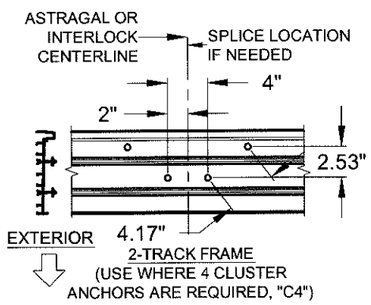

2-TRACK FRAME
(USE WHERE 4 CLUSTER ANCHORS ARE REQUIRED, "C4")

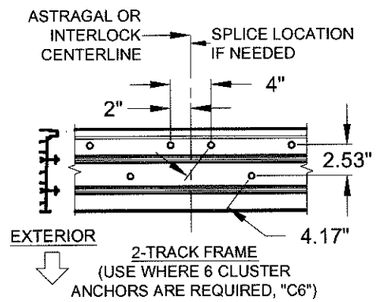

2-TRACK FRAME
(USE WHERE 6 CLUSTER ANCHORS ARE REQUIRED, "C6")

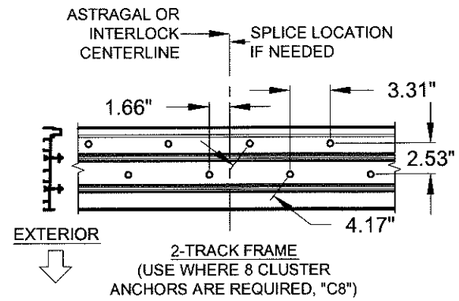

2-TRACK FRAME
(USE WHERE 8 CLUSTER ANCHORS ARE REQUIRED, "C8")

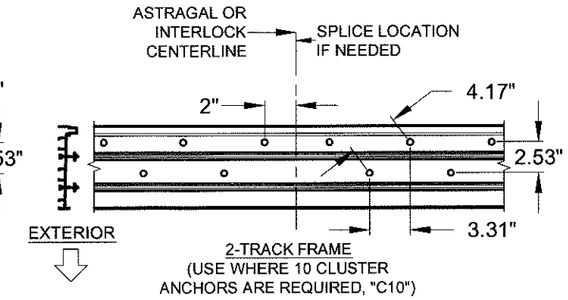

2-TRACK FRAME
(USE WHERE 10 CLUSTER ANCHORS ARE REQUIRED, "C10")

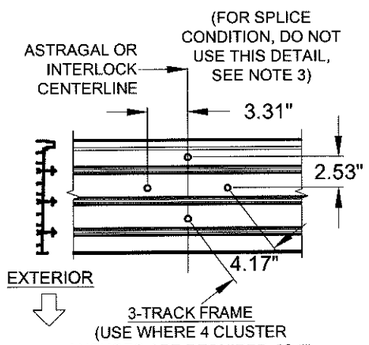

3-TRACK FRAME
(USE WHERE 4 CLUSTER ANCHORS ARE REQUIRED, "C4")

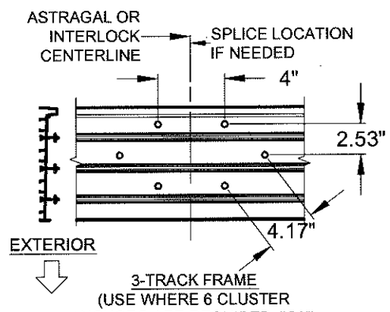

3-TRACK FRAME
(USE WHERE 6 CLUSTER ANCHORS ARE REQUIRED, "C6")

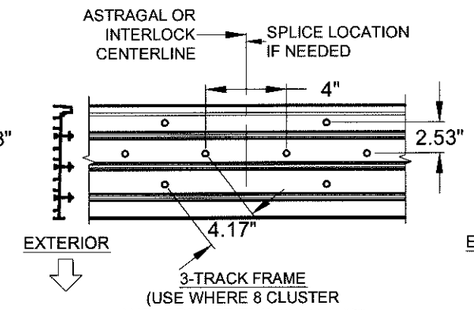

3-TRACK FRAME
(USE WHERE 8 CLUSTER ANCHORS ARE REQUIRED, "C8")

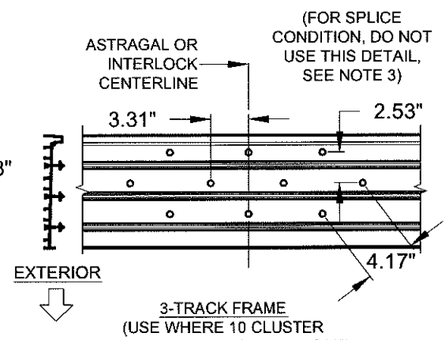

3-TRACK FRAME
(USE WHERE 10 CLUSTER ANCHORS ARE REQUIRED, "C10")

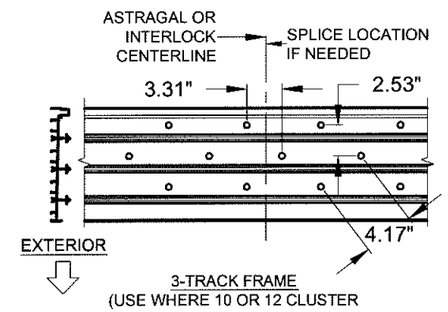

3-TRACK FRAME
(USE WHERE 10 OR 12 CLUSTER ANCHORS ARE REQUIRED, "C12")

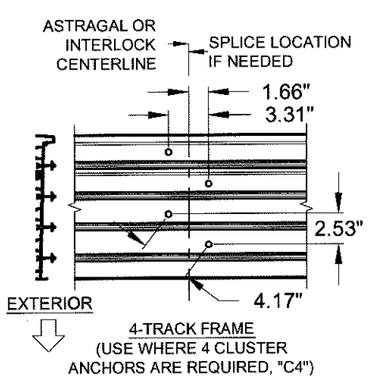

4-TRACK FRAME
(USE WHERE 4 CLUSTER ANCHORS ARE REQUIRED, "C4")

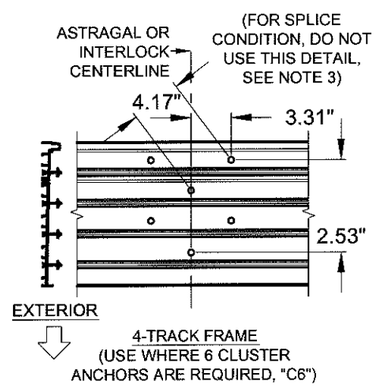

4-TRACK FRAME
(USE WHERE 6 CLUSTER ANCHORS ARE REQUIRED, "C6")

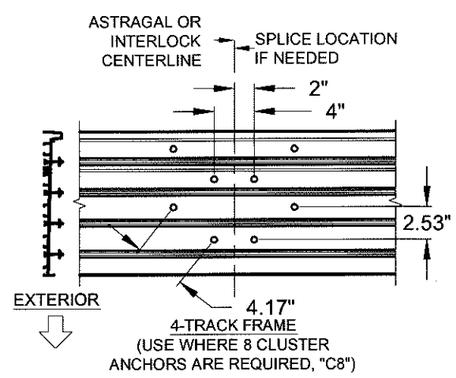

4-TRACK FRAME
(USE WHERE 8 CLUSTER ANCHORS ARE REQUIRED, "C8")

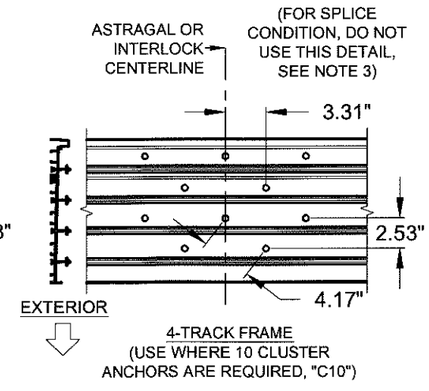

4-TRACK FRAME
(USE WHERE 10 CLUSTER ANCHORS ARE REQUIRED, "C10")

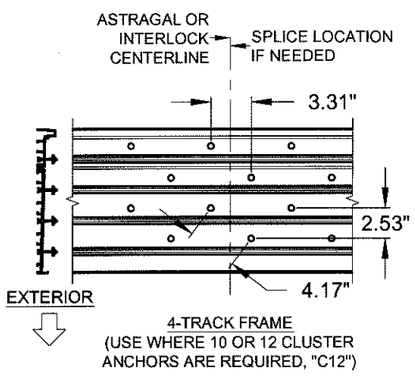

4-TRACK FRAME
(USE WHERE 10 OR 12 CLUSTER ANCHORS ARE REQUIRED, "C12")

FIGURES PERTAIN TO THE FOLLOWING INTERLOCK/ASTRAGAL ANCHOR LOCATIONS:

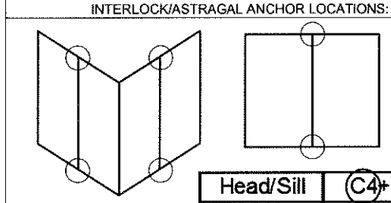

Head/Sill	C4+1
Jamb	8
P-hook	4+4

NOTES:
1) ALL DIMENSIONS SHOWN ARE BASED ON MINIMUM ALLOWED.

2) SILL SHOWN, HEAD SIMILAR.

3) IF A SPLICE IS NOT SHOWN AT A GIVEN CLUSTER QUANTITY, USE THE NEXT HIGHER CLUSTER QUANTITY.

Title	ALUMINUM SLIDING GLASS DOOR NOA (LM)			Date	10/05/15
Desc.	ANCHOR LAYOUT			Drawn By	J ROSOWSKI
Rev.	NO CHANGES THIS SHEET.			Rev. Date	04/05/17
Series	SGD-780	Scale NTS	Sheet 13 OF 18	DWG No. MD-780.0	Rev. No. B

1070 TECHNOLOGY DR
N. VENICE, FL 34275
(941)-480-1600
CERT. OF AUTH. #29296

PRODUCT REVISED
as complying with the Florida Building Code
Acceptance No. 12-0420.04
Expiration Date 8/2/2022
Mgr. Dade Product Control

ANTHONY LYNN MILLER
LICENSE
No. 58705
STATE OF FLORIDA
PROFESSIONAL ENGINEER
7/17/17

A. LYNN MILLER, P.E.
P.E.# 58705

HEAD/SILL 90° CORNER CLUSTER ANCHORS LAYOUT:

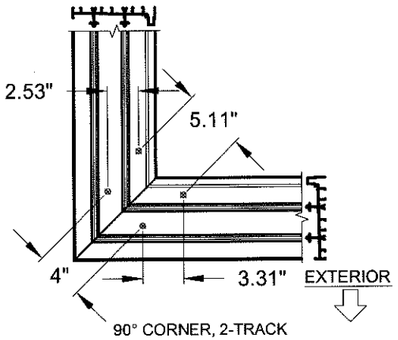

90° CORNER, 2-TRACK
(USE WHERE 4 CLUSTER
ANCHORS ARE REQUIRED, " C4")

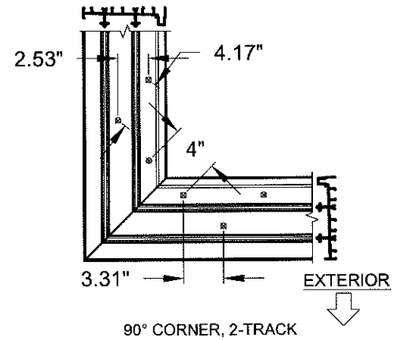

90° CORNER, 2-TRACK
(USE WHERE 6 CLUSTER
ANCHORS ARE REQUIRED, " C6")

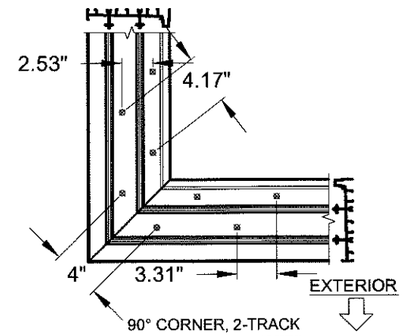

90° CORNER, 2-TRACK
(USE WHERE 8 CLUSTER
ANCHORS ARE REQUIRED, " C8")

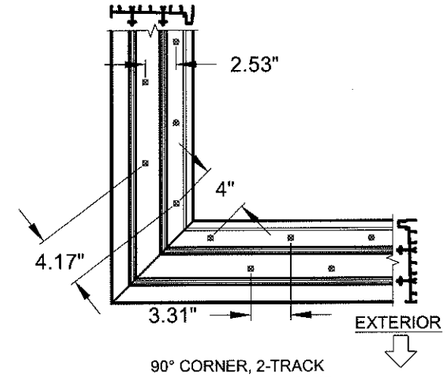

90° CORNER, 2-TRACK
(USE WHERE 10 CLUSTER
ANCHORS ARE REQUIRED, " C10")

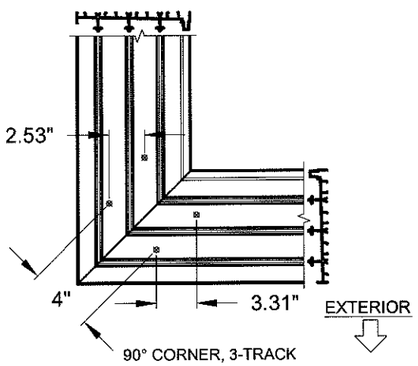

90° CORNER, 3-TRACK
(USE WHERE 4 CLUSTER
ANCHORS ARE REQUIRED, " C4")

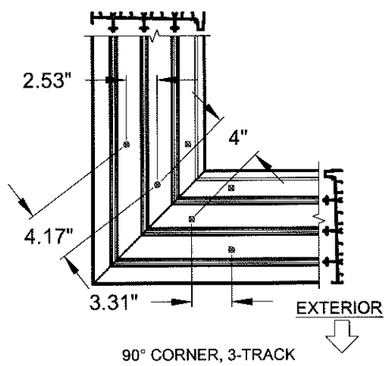

90° CORNER, 3-TRACK
(USE WHERE 6 CLUSTER
ANCHORS ARE REQUIRED, " C6")

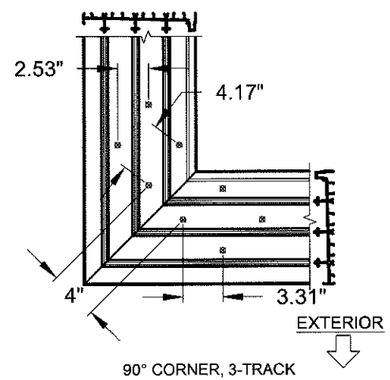

90° CORNER, 3-TRACK
(USE WHERE 8 CLUSTER
ANCHORS ARE REQUIRED, " C8")

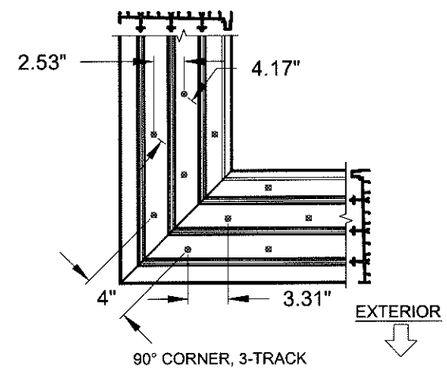

90° CORNER, 3-TRACK
(USE WHERE 10 CLUSTER
ANCHORS ARE REQUIRED, " C10")

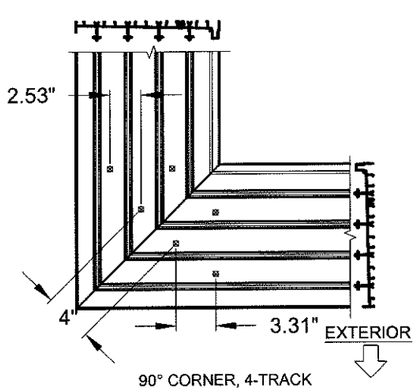

90° CORNER, 4-TRACK
(USE WHERE 4 OR 6 CLUSTER
ANCHORS ARE REQUIRED, " C6")

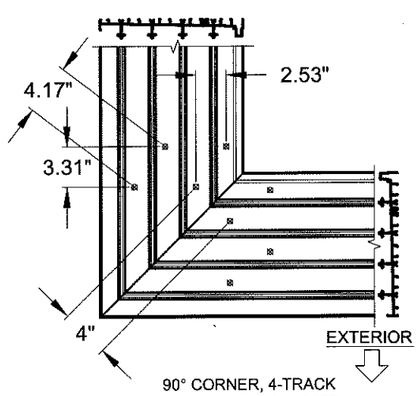

90° CORNER, 4-TRACK
(USE WHERE 8 CLUSTER
ANCHORS ARE REQUIRED, " C8")

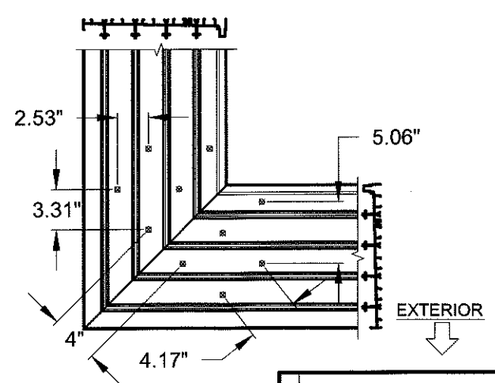

90° CORNER, 4-TRACK
(USE WHERE 10 CLUSTER
ANCHORS ARE REQUIRED, " C10")

NOTES:

1) ALL DIMENSIONS SHOWN ARE BASED ON MINIMUM ALLOWED.

2) DETAILS DEPICT ANCHOR QUANTITY AND SPACING, AND WOULD BE SIMILAR FOR INSIDE AND OUTSIDE CORNER CONFIGURATIONS.

3) SILL SHOWN, HEAD SIMILAR.

FIGURES PERTAIN TO THE FOLLOWING 90° CORNER ANCHOR LOCATIONS:

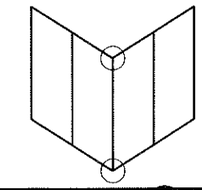

Head/Sill	C4+1
Jamb	8
P-hook	4+4

PRODUCT REVISED
as complying with the Florida
Building Code
Acceptance No. 17-0426.04
Expiration Date 3/2/2022
By [signature]
Mgr. of Dept. Product Control

ANTHONY LYNN MILLER
LICENSE
No. 58705
STATE OF FLORIDA
PROFESSIONAL ENGINEER

A. LYNN MILLER, P.E.
P.E.# 58705

Title	ALUMINUM SLIDING GLASS DOOR NOA (LM)			Date	10/05/15
Desc.	ANCHOR LAYOUT			Drawn By	J ROSOWSKI
Rev.	NO CHANGES THIS SHEET.			Rev. Date	04/05/17
Series	SGD-780	Scale NTS	Sheet 14 OF 18	DWG No. MD-780.0	Rev. No. B

1070 TECHNOLOGY DR
N. VENICE, FL 34275
(941)-480-1600

CERT. OF AUTH. #29296

P-HOOK ANCHORS LAYOUT FOR ALL DOORS:

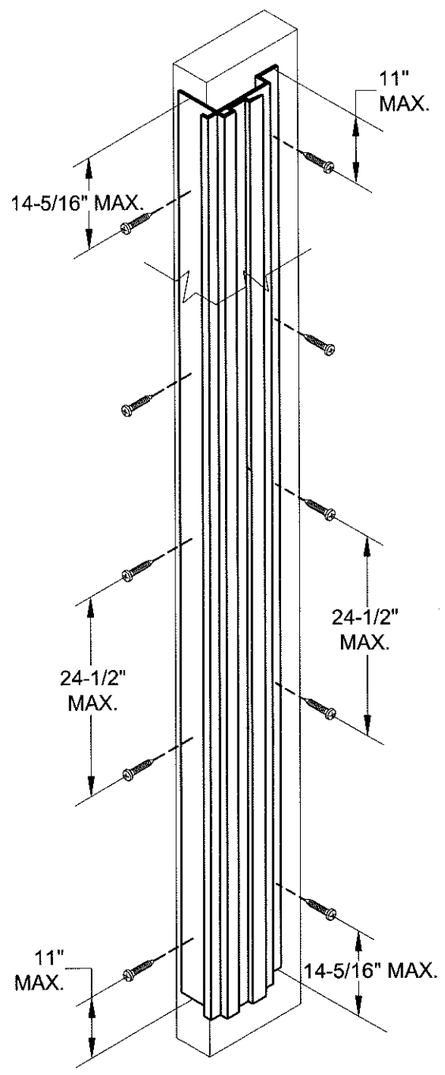

NOTES:
1) SEE TABLES 1-3 FOR EXACT QUANTITY OF ANCHORS REQUIRED IN THE P-HOOK.

FIGURE PERTAINS TO THE FOLLOWING POCKET JAMB (P-HOOK) ANCHOR LOCATIONS:

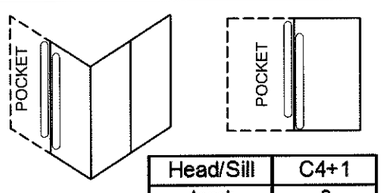

Head/Sill	C4+1
Jamb	8
P-hook	5+5

FIGURES PERTAIN TO THE FOLLOWING 135° CORNER ANCHOR LOCATIONS:

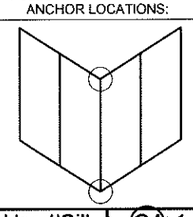

Head/Sill	C4+1
Jamb	8
P-hook	4+4

HEAD/SILL 135° CORNER CLUSTER ANCHORS LAYOUT:

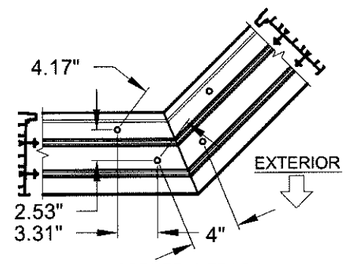

135° CORNER, 2-TRACK (USE WHERE 4 CLUSTER ANCHORS ARE REQUIRED, "C4")

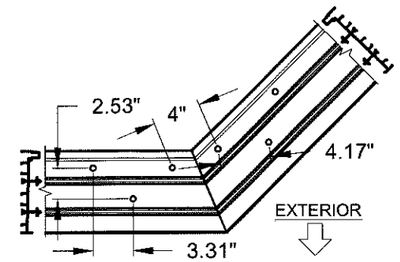

135° CORNER, 2-TRACK (USE WHERE 6 CLUSTER ANCHORS ARE REQUIRED, "C6")

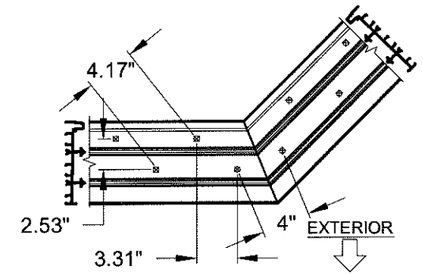

135° CORNER, 2-TRACK (USE WHERE 8 CLUSTER ANCHORS ARE REQUIRED, "C8")

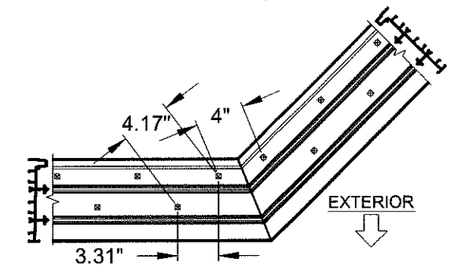

135° CORNER, 2-TRACK (USE WHERE 10 CLUSTER ANCHORS ARE REQUIRED, "C10")

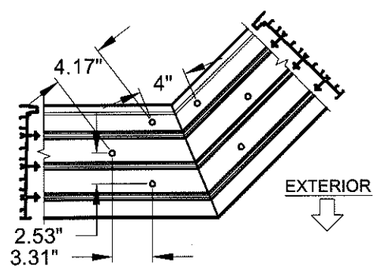

135° CORNER, 3-TRACK (USE WHERE 4 OR 6 CLUSTER ANCHORS ARE REQUIRED, "C6")

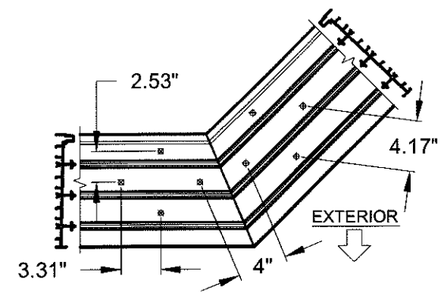

135° CORNER, 3-TRACK (USE WHERE 8 CLUSTER ANCHORS ARE REQUIRED, "C8")

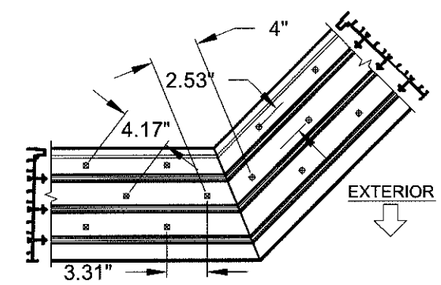

135° CORNER, 3-TRACK (USE WHERE 10 CLUSTER ANCHORS ARE REQUIRED, "C10")

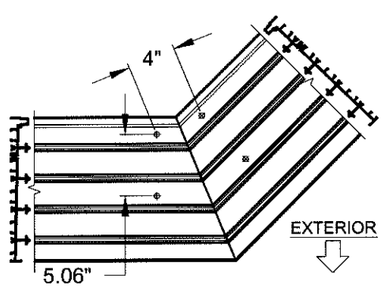

135° CORNER, 4-TRACK (USE WHERE 4 CLUSTER ANCHORS ARE REQUIRED, "C4")

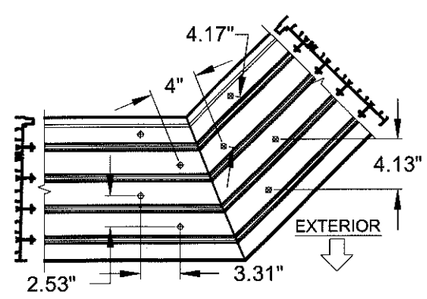

135° CORNER, 4-TRACK (USE WHERE 6 OR 8 CLUSTER ANCHORS ARE REQUIRED, "C8")

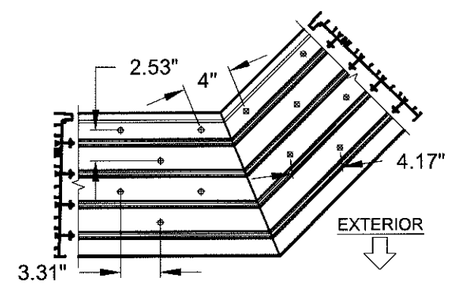

135° CORNER, 4-TRACK (USE WHERE 10 CLUSTER ANCHORS ARE REQUIRED, "C10")

NOTES:
1) ALL DIMENSIONS SHOWN ARE BASED ON MINIMUM ALLOWED.

2) DETAILS DEPICT ANCHOR QUANTITY AND SPACING, AND WOULD BE SIMILAR FOR INSIDE AND OUTSIDE CORNER CONFIGURATIONS.

3) SILL SHOWN, HEAD SIMILAR.

PRODUCT REVISED as complying with the Florida Building Code
Acceptance No. 17-0420.04
Expiration Date 8/2/2022
Mr. Ishaq I. Thanda
Mr. Ist' Date Product Control

ANTHONY LYNN MILLER
LICENSE
No. 58705
7/17/17
STATE OF FLORIDA
PROFESSIONAL ENGINEER

A. LYNN MILLER, P.E.
P.E.# 58705

Title	ALUMINUM SLIDING GLASS DOOR NOA (LM)			Date	10/05/15
Desc.	ANCHOR LAYOUT			Drawn By	J ROSOWSKI
Rev.	NO CHANGES THIS SHEET.			Rev. Date	04/05/17
Series	SGD-780	Scale NTS	Sheet 15 OF 18	DWG No. MD-780.0	Rev. No. B

1070 TECHNOLOGY DR
N. VENICE, FL 34275
(941)-480-1600

CERT. OF AUTH. #29296

PANEL TYPES	SINGLE INTERLOCK OUT	SINGLE INTERLOCK IN	DOUBLE INTERLOCK	FIXED STILE	LOCKSTILE W/ HANDLE	ASTRAGAL BOX IN	ASTRAGAL BOX IN W/ HANDLE	ASTRAGAL BOX OUT	ASTRAGAL BOX OUT W/ HANDLE	INSIDE 90° ASTRAGAL RECEIVER W/ HANDLE	OUTSIDE 90° ASTRAGAL RECEIVER	OUTSIDE 90° ASTRAGAL RECEIVER W/ HANDLE	INSIDE 90° CORNER LOCKSTILE W/ HANDLE	OUTSIDE 90° CORNER LOCKSTILE W/ HANDLE	OUTSIDE 135° ASTRAGAL RECEIVER	INSIDE 135° ASTRAGAL RECEIVER	OUTSIDE 135° ASTRAGAL RECEIVER W/ HANDLE	INSIDE 135° ASTRAGAL RECEIVER W/ HANDLE
SINGLE INTERLOCK OUT	E	F		PP	K		L (BOX IN)		L (BOX OUT)	TA		TC	TR	TQ			TV	TW
SINGLE INTERLOCK IN	B			P	A		C (BOX IN)		C (BOX OUT)	SA		SC	IC	SQ			SV	SW
DOUBLE INTERLOCK			I	YR	GR													
FIXED STILE	RR	R	Y			S (BOX IN)		S (BOX OUT)		FD	FC				FV	FW		
LOCKSTILE W/ HANDLE	D	M	G			J (BOX IN)	W (BOX IN)	J (BOX OUT)	W (BOX OUT)									
ASTRAGAL BOX IN				T (BOX IN)	U (BOX IN)													
ASTRAGAL BOX IN W/ HANDLE		N (BOX IN)																
ASTRAGAL BOX OUT				T (BOX OUT)	U (BOX OUT)													
ASTRAGAL BOX OUT W/ HANDLE	LR (BOX OUT)		WR (BOX OUT)															
INS. 90° ASTRAGAL RECEIVER W/ HANDLE	AT	AS		DF														
OUTSIDE 90° ASTRAGAL RECEIVER				CF														
OUT. 90° ASTRAGAL RECEIVER W/ HANDLE	CT	CS																
INS. 90° CORNER LOCKSTILE W/ HANDLE	RT	CI																
OUT. 90° CORNER LOCKSTILE W/ HANDLE	QT	QS																
OUTSIDE 135° ASTRAGAL RECEIVER				VF														
INSIDE 135° ASTRAGAL RECEIVER				WF														
OUTSIDE 135° AST. RECEIVER W/ HANDLE	VT	VS																
INSIDE 135° AST. RECEIVER W/ HANDLE	WT	WS																

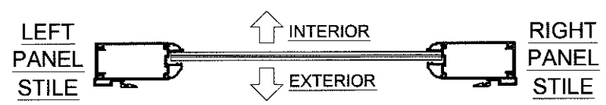

PANEL "E" SHOWN. SEE TABLE FOR OTHER PANEL TYPES AND APPLICABLE STILE/ASTRAGAL REQUIREMENTS.

PANEL NOTES:

1. SEE DP/ANCHOR TABLES 1-3, SHEETS 7-8 FOR PANEL SIZES & DESIGN PRESSURE.
2. PANEL TYPES NOT SHOWN ARE NOT REQUIRED FOR ANY CONFIGURATIONS AND ARE NOT AVAILABLE.
3. MAXIMUM NOMINAL PANEL WIDTH FOR ALL PANEL CONFIGURATIONS IS 60".

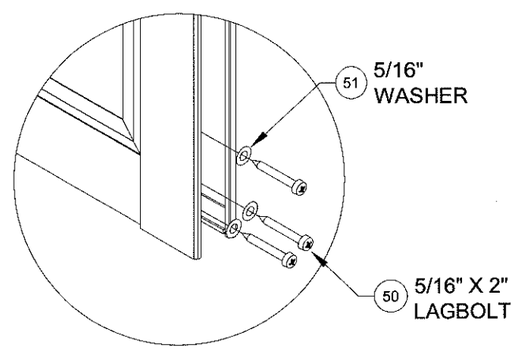

PANEL CORNER DETAIL
SHOWN WITHOUT STILE COVER

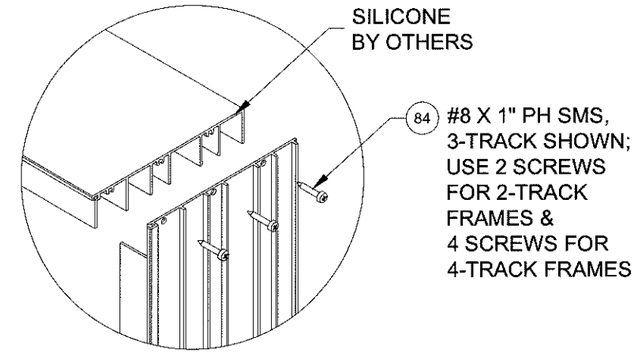

FRAME CORNER DETAIL
3-TRACK FRAME SHOWN

PRODUCT REVISED
as complying with the Florida Building Code
Acceptance No. 17-0420.04
Expiration Date 8/2/2022
Miami-Dade Product Control

ANTHONY LYNN MILLER
LICENSE
No. 58705
7/17/17
STATE OF FLORIDA
PROFESSIONAL ENGINEER

A. LYNN MILLER, P.E.
P.E.# 58705

Title	ALUMINUM SLIDING GLASS DOOR NOA (LM)			Date	10/05/15
Desc.	PANEL TYPES			Drawn By	J ROSOWSKI
Rev.	NO CHANGES THIS SHEET.			Rev. Date	04/05/17
Series	SGD-780	Scale NTS	Sheet 16 OF 18	DWG No. MD-780.0	Rev. No. B

1070 TECHNOLOGY DR
N. VENICE, FL 34275
(941)-480-1600
CERT. OF AUTH. #29296

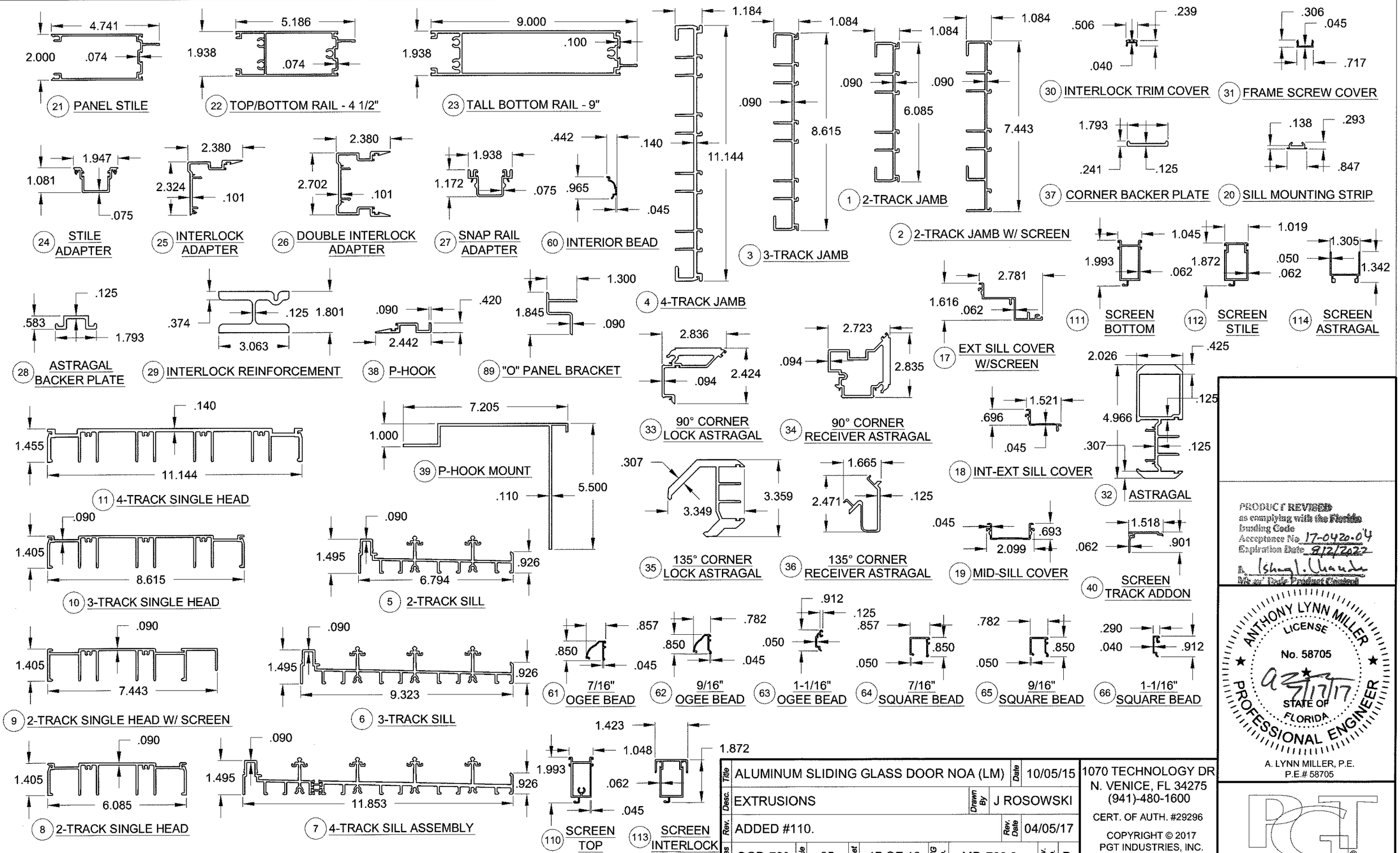

NOTES: 1) SEE SHEET 4 FOR SILL RISERS. ALL DIMENSIONS IN INCHES.

Title	ALUMINUM SLIDING GLASS DOOR NOA (LM)			Date	10/05/15
Desc.	EXTRUSIONS			Drawn By	J ROSOWSKI
Rev.	ADDED #110.			Rev. Date	04/05/17
Series	SGD-780	Scale .25	Sheet 17 OF 18	DWG No. MD-780.0	Rev. No. B

1070 TECHNOLOGY DR
N. VENICE, FL 34275
(941)-480-1600
CERT. OF AUTH. #29296

TABLE D:

#	Part #	Description	Material
1	8134	2-Track Jamb	6063 T6 Al
2	8135	2-Track Jamb with Screen Rail	6063 T6 Al
3	8133	3-Track Jamb	6063 T6 Al
4	8132	4-Track Jamb	6063 T6 Al
5	8118	2-Track Sill	6063 T6 Al
6	8116	3-Track Sill	6063 T6 Al
7	8120	4-Track Sill	6063 T6 Al
8	8127A	2-Track Head	6063 T6 Al
9	8128A	2-Track Head with Screen Rail	6063 T6 Al
10	8124	3-Track Head	6063 T6 Al
11	8121	4-Track Head	6063 T6 Al
12	8140	Sill Riser - 1-5/8"	6063 T6 Al
13	8139	Sill Riser - 2-3/4"	6063 T6 Al
14	8138	Sill Riser - 3-1/2"	6063 T6 Al
15	8137	Sill Riser - 4-1/2"	6063 T6 Al
16	8182	Sill Riser - 5-1/4"	6063 T6 Al
17	8119A	Ext. Sill Cover with Screen Rail	6063 T6 Al
18	8117	Int-Ext. Sill Cover	6063 T6 Al
19	8115	Mid-Sill Cover	6063 T6 Al
20	8183	Sill Mounting Strip/Anchor Plate	6063 T6 Al
21	8012	Panel Stile	6063 T6 Al
22	8014C	Top/Bottom Rail	6063 T6 Al
23	8013C	9" Tall Bottom Rail	6063 T6 Al
24	8104	Stile Adaptor	6063 T6 Al
25	8102	Interlock Adaptor (Single)	6063 T6 Al
26	8101	Interlock Adaptor (Double)	6063 T6 Al
27	8103	Top Snap Rail Adaptor	6063 T6 Al
28	8105	Astragal Backup Plate	6063 T6 Al
29	8192	Interlock Reinforcement	6105 T5 Al
30	8200	Interlock Screw Cover with T-slot	6063 T6 Al
31	8136	Frame Screw Cover	6063 T6 Al
32	8107C	Astragal	6063 T6 Al
33	8110	90° Corner Lock Astragal	6063 T6 Al
34	8111	90° Corner Astragal Receiver	6063 T6 Al
35	8204	135° Corner Astragal	6063 T6 Al
36	8205	135° Passive Corner Mount	6063 T6 Al
37	8112	90° Corner Astragal Backup Plate	6063 T6 Al
38	8108	Pocket Door P-Hook	6063 T6 Al
39	8109	Pocket Door P-Hook Mount	6063 T6 Al
40	8141	Screen Frame Add-on (Sill)	6063 T6 Al
41	8142A	Screen Frame Add-on (Head)	6063 T6 Al
42	8143A	Screen Track Addon	6063 T6 Al

TABLE D, CONTINUED:

#	Part #	Description	Material
43	1695	1-1/2" X 1" X 3/4" Fin Seal Dust Plug	
44	6TP248	Vinyl Bulb Weatherstrip @ Interlock	Flex PVC
45	6TP247	Vinyl Bulb Weatherstrip @ P-hook	Flex PVC
46	1644	.187" X .270" Weatherstrip	
48	8175	Corner Astragal Seal	
49	1270	1/2" X 1-1/8" Open Cell Foam Pad, 3+ Panels	
50		5/16" X 2" Lagbolt	SS
51	8197	Lagbolt Washer	Nylon
52	8153	Tandem St. Stl. Roller Assembly	SS
53	8153	Tandem Nylon Roller Assembly	Steel
54		#10" X 1-1/2" Ph. PH. SMS @ Roller	SS
55	8052	Roller Adj. Hole Plug	PVC
60	8022	Interior Bead	6063 T5 Al
61	8150	7/16" OG Bead	6063 T5 Al
62	8145	9/16" OG Bead	6063 T5 Al
63	8146	1-1/16" OG Bead	6063 T5 Al
64	8150	7/16" Square Bead	6063 T5 Al
65	8148	9/16" Square Bead	6063 T5 Al
66	8149	1-1/16" Square Bead	6063 T5 Al
67	6TP247	Vinyl Glazing Bulb	
68	1643	Foam-filled Glazing Bulb (7/16" glazing only)	
69		Dow 899, 995 or Instantglaze Glazing Silicone	Silicone
70	1725	Setting Block, 1/2" X 4" X 1/16", 85 +/- 5 duro.	EPDM
71	1726	Setting Block, 1" X 4" X 1/16" (IG), 85 +/- 5 duro.	EPDM
72		Super Spacer nXT with Hot Melt Butyl	Composite
73		Duraseal	Composite
74		Cardinal XL Edge Spacer	Composite
80	710X34PPSDAX	#10 X 3/4" Ph. PH. SMS @ P-hook	SS
81		#8 X 5/8" Ph. PH. SMS @ Single Interlock	SS
82		#8 X 3/4" Ph. PH. SMS @ Double Interlock	SS
83	710X115PPX	#10 X 1-1/2" Ph. PH. SMS @ Astragal	SS
84	1155	#8 X 1" PH. Quad. SMS @ Main frame	SS
85	72087K	Jamb Bumper	
86	76X38PPAX	#6 X .375" Ph. PH. SMS	SS
87	4385	4 Hole Bumper Stop	
88	78X38PPTX	#8 X 3/8" Ph. PH. SMS	Steel
89	8193	"O" Panel Bracket - 12" long	
90		#10 X 3/4" Ph. PH. SMS @ Bracket to Stile	SS
91		#8 X 3/4" Ph. FH. SMS @ Bracket to Frame	SS

TABLE D, CONTINUED:

Bill of Material

#	Part #	Description	Material
110	4317	Screen Top Rail	6063 T6 Al
111	4318	Screen Bottom Rail	6063 T6 Al
112	4319	Screen Side Rail/Lockstile	6063 T6 Al
113	8152	Screen Interlock Adapter	6063 T6 Al
114	4344	Screen Astragal	6063 T6 Al
115	7SRAZ	Roller	Nylon
116	7SRAX	Roller	SS
117		1/4" X 1" MS @ Top Rail	SS
118		1/4" X 1-1/2" MS @ Bottom Rail	SS
119		Screen Lockset	Steel
120	653	Screen Lock Keeper	Steel
121	1179	#10 X 3/4" Ph. PH. SMS @ Keeper	SS
122	1793	.270" X .150" Weatherstrip	
123	1692	Screen Spline - .165"	Vinyl
124		Screen Cloth	Fiberglass

PRODUCT REVISED
as complying with the Florida
Building Code
Acceptance No 17-0420.04
Expiration Date 8/2/2022
By Sheng J. Chang
Product Control

ANTHONY LYNN MILLER
LICENSE
No. 58705
7/17/17
STATE OF FLORIDA
PROFESSIONAL ENGINEER

A. LYNN MILLER, P.E.
P.E.# 58705

NOTES:

1) ITEMS # 47, 56-59, 75-79 & 92-109 ARE NOT USED AND ARE NOT PART OF THIS APPROVAL.

Title	ALUMINUM SLIDING GLASS DOOR NOA (LM)	Date	10/05/15
Desc.	PARTS LIST	Drawn By	J ROSOWSKI
Rev.	NO CHANGES THIS SHEET.	Rev. Date	04/05/17
Series	SGD-780	Scale	NTS
Sheet	18 OF 18	DWG No.	MD-780.0
Rev. No.	B		

1070 TECHNOLOGY DR
N. VENICE, FL 34275
(941)-480-1600
CERT. OF AUTH. #29296