MIAMI-DADE COUNTY
PRODUCT CONTROL SECTION
11805 SW 26 Street, Room 208
Miami, Florida 33175-2474
T (786) 315-2590 F (786) 315-2599
www.miamidade.gov/economy

DEPARTMENT OF REGULATORY AND ECONOMIC RESOURCES (RER)
BOARD AND CODE ADMINISTRATION DIVISION

# NOTICE OF ACCEPTANCE (NOA)

**PGT Industries, Inc.**
**1070 Technology Drive,**
**North Venice, FL 34275**

**SCOPE:**

This NOA is being issued under the applicable rules and regulations governing the use of construction materials. The documentation submitted has been reviewed and accepted by Miami-Dade County RER -Product Control Section to be used in Miami Dade County and other areas where allowed by the Authority Having Jurisdiction (AHJ).

This NOA shall not be valid after the expiration date stated below. The Miami-Dade County Product Control Section (In Miami Dade County) and/or the AHJ (in areas other than Miami Dade County) reserve the right to have this product or material tested for quality assurance purposes. If this product or material fails to perform in the accepted manner, the manufacturer will incur the expense of such testing and the AHJ may immediately revoke, modify, or suspend the use of such product or material within their jurisdiction. RER reserves the right to revoke this acceptance, if it is determined by Miami-Dade County Product Control Section that this product or material fails to meet the requirements of the applicable building code.

This product is approved as described herein, and has been designed to comply with the Florida Building Code, including the High Velocity Hurricane Zone.

**DESCRIPTION: Series "5570/2770" Vinyl Sliding Glass Door (Reinforced)-L.M.I.**

**APPROVAL DOCUMENT:** Drawing No. **MD-5570.0**, titled "Vinyl Sliding Glass Door NOA (LM)", sheets 1 through 21 of 21, prepared by manufacturer, dated 10/05/15, with revision A dated 04/05/17, signed and sealed by A. Lynn Miller, P.E., bearing the Miami-Dade County Product Control Revision stamp with the Notice of Acceptance number and expiration date by the Miami-Dade County Product Control Section.

**MISSILE IMPACT RATING: Large and Small Missile Impact Resistant**

**LABELING:** Each unit shall bear a permanent label with the manufacturer's name or logo, city, state and series and following statement: "Miami-Dade County Product Control Approved", noted herein.

**RENEWAL** of this NOA shall be considered after a renewal application has been filed and there has been no change in the applicable building code negatively affecting the performance of this product.

**TERMINATION** of this NOA will occur after the expiration date or if there has been a revision or change in the materials, use, and/or manufacture of the product or process. Misuse of this NOA as an endorsement of any product, for sales, advertising or any other purposes shall automatically terminate this NOA. Failure to comply with any section of this NOA shall be cause for termination and removal of NOA.

**ADVERTISEMENT:** The NOA number preceded by the words Miami-Dade County, Florida, and followed by the expiration date may be displayed in advertising literature. If any portion of the NOA is displayed, then it shall be done in its entirety.

**INSPECTION:** A copy of this entire NOA shall be provided to the user by the manufacturer or its distributors and shall be available for inspection at the job site at the request of the Building Official.

This NOA **revises NOA #15-1210.01** and consists of this page 1 and evidence pages E-1, E-2, E-3 & E-4 as well as approval document mentioned above.

The submitted documentation was reviewed by **Jorge M. Plasencia, P.E.**

MIAMI-DADE COUNTY APPROVED

09/15/17

**NOA No. 17-0420.06**
**Expiration Date: April 14, 2021**
**Approval Date: September 28, 2017**

## NOTICE OF ACCEPTANCE: EVIDENCE SUBMITTED

### A. DRAWINGS

1. Manufacturer's die drawings and sections.
   ***(Submitted under NOA No. 11-0107.04)***
2. Drawing No. **MD-5570.0**, titled "Vinyl Sliding Glass Door NOA (LM)", sheets 1 through 21 of 21, prepared by manufacturer, dated 10/05/15, with revision A dated 04/05/17, signed and sealed by A. Lynn Miller, P.E.

### B. TESTS

1. Test report on 1) Uniform Static Air Pressure Test, per FBC, TAS 202-94
   2) Large Missile Impact Test per FBC, TAS 201-94
   3) Cyclic Wind Pressure Loading per FBC, TAS 203-94

   along with marked-up drawings and installation diagram of vinyl sliding glass door, prepared by Fenestration Testing Lab, Inc., Test Report No. **FTL 8717**, dated 12/07/15, signed and sealed by Idalmis Ortega, P. E. (Test report revised on 02/15/16 and 02/24/16)
2. Test report on 1) Air Infiltration Test, per FBC, TAS 202-94
   2) Uniform Static Air Pressure Test, per FBC, TAS 202-94
   3) Water Resistance Test, per FBC, TAS 202-94.
   4) Large Missile Impact Test per FBC, TAS 201-94
   5) Cyclic Wind Pressure Loading per FBC, TAS 203-94
   6) Forced Entry Test, per FBC, TAS 202-94

   along with marked-up drawings and installation diagram of vinyl sliding glass door, prepared by Fenestration Testing Lab, Inc., Test Report No. **FTL 8546**, dated 11/06/15, signed and sealed by Idalmis Ortega, P. E. (Test report revised on 01/04/16 and 02/11/2016)
3. Test report on 1) Air Infiltration Test, per FBC, TAS 202-94
   2) Uniform Static Air Pressure Test, per FBC, TAS 202-94
   3) Water Resistance Test, per FBC, TAS 202-94
   4) Large Missile Impact Test per FBC, TAS 201-94
   5) Cyclic Wind Pressure Loading per FBC, TAS 203-94
   6) Forced Entry Test, per FBC, TAS 202-94

   along with marked-up drawings and installation diagram of vinyl sliding glass door, prepared by Fenestration Testing Lab, Inc., Test Report No. **FTL 8547**, dated 12/04/15, signed and sealed by Idalmis Ortega, P. E. (Test report revised on 02/15/16)
4. Test report on 1) Air Infiltration Test, per FBC, TAS 202-94
   2) Uniform Static Air Pressure Test, per FBC, TAS 202-94
   3) Water Resistance Test, per FBC, TAS 202-94
   4) Large Missile Impact Test per FBC, TAS 201-94
   5) Cyclic Wind Pressure Loading per FBC, TAS 203-94
   6) Forced Entry Test, per FBC, TAS 202-94

   along with marked-up drawings and installation diagram of vinyl sliding glass door, prepared by Fenestration Testing Lab, Inc., Test Report No. **FTL 8548**, dated 12/04/15, signed and sealed by Idalmis Ortega, P. E. (Test report revised on 01/04/16 and 02/11/16)

**Jorge M. Plasencia, P.E.**
**Product Control Unit Supervisor**
**NOA No. 17-0420.06**
**Expiration Date: April 14, 2021**
**Approval Date: September 28, 2017**

## NOTICE OF ACCEPTANCE: EVIDENCE SUBMITTED

**B. TESTS (continued)**

5. Test report on 1) Air Infiltration Test, per FBC, TAS 202-94
   2) Uniform Static Air Pressure Test, per FBC, TAS 202-94
   3) Water Resistance Test, per FBC, TAS 202-94.
   4) Large Missile Impact Test per FBC, TAS 201-94
   5) Cyclic Wind Pressure Loading per FBC, TAS 203-94
   6) Forced Entry Test, per FBC, TAS 202-94

   along with marked-up drawings and installation diagram of vinyl sliding glass door, prepared by Fenestration Testing Lab, Inc., Test Report No. **FTL 8549**, dated 11/06/15, signed and sealed by Idalmis Ortega, P. E. (Test report revised on 12/04/15 and 02/11/16)
6. Test report on 1) Air Infiltration Test, per FBC, TAS 202-94
   2) Uniform Static Air Pressure Test, per FBC, TAS 202-94
   3) Water Resistance Test, per FBC, TAS 202-94.
   4) Large Missile Impact Test per FBC, TAS 201-94
   5) Cyclic Wind Pressure Loading per FBC, TAS 203-94

   along with marked-up drawings and installation diagram of vinyl sliding glass door, prepared by Fenestration Testing Lab, Inc., Test Report No. **FTL 8552**, dated 12/04/15, signed and sealed by Idalmis Ortega, P. E. (Test report revised on 02/15/2016)
7. Test report on 1) Uniform Static Air Pressure Test, per FBC, TAS 202-94
   2) Large Missile Impact Test per FBC, TAS 201-94
   3) Cyclic Wind Pressure Loading per FBC, TAS 203-94

   along with marked-up drawings and installation diagram of vinyl sliding glass door, prepared by Fenestration Testing Lab, Inc., Test Report No. **FTL 6638** (samples A-1 thru A-22), dated 11/19/10, signed and sealed by Jorge A. Causo, P. E.

   ***(Submitted under NOA No. 11-0107.04)***
8 Test report on 1) Air Infiltration Test, per FBC, TAS 202-94
   2) Uniform Static Air Pressure Test, per FBC, TAS 202-94
   3) Water Resistance Test, per FBC, TAS 202-94.
   4) Large Missile Impact Test per FBC, TAS 201-94
   5) Cyclic Wind Pressure Loading per FBC, TAS 203-94
   6) Forced Entry Test, per FBC, TAS 202-94

along with marked-up drawings and installation diagram of vinyl sliding glass door, prepared by Fenestration Testing Lab, Inc., Test Report No. **FTL 6337** (samples A-1 thru A-5), dated 12/06/10, signed and sealed by Jorge A. Causo, P. E.
***(Submitted under NOA No. 11-0107.09)***

**C. CALCULATIONS**

1. Anchor verification calculations and structural analysis, complying with FBC-2014, prepared by PGT, dated 12/09/15and last revised on 02/15/16, signed and sealed by Anthony L. Miller, P.E.

   ***(Submitted under NOA No. 15-1210.01)***

**Jorge M. Plasencia, P.E.**
**Product Control Unit Supervisor**
**NOA No. 17-0420.06**
**Expiration Date: April 14, 2021**
**Approval Date: September 28, 2017**

## NOTICE OF ACCEPTANCE: EVIDENCE SUBMITTED

**C. CALCULATIONS (cont.)**

2. Glazing complies with ASTME-1300-09

**D. QUALITY ASSURANCE**

1. Miami Dade Department of Regulatory and Economic Resources (RER).

**E. MATERIAL CERTIFICATIONS**

1. Notice of Acceptance No. **15-0528.14** issued to Vision Extrusion Limited for their "**White Rigid PVC Exterior Extrusions for Windows and Doors**", dated 08/13/15, expiring on 09/30/19.
2. Notice of Acceptance No. **16-0920.08** issued to Vision Extrusion Limited for their "**VE 1000 Tan 202 and lighter Shades (Non-White) Rigid PVC Exterior Extrusions for Windows and Doors**", dated 12/08/16, expiring on 12/29/21.
3. Notice of Acceptance No. **15-0528.15** issued to Vision Extrusion Limited for their "**Brown Coated (Painted or Laminated) White Rigid PVC Exterior Extrusions for Windows and Doors**", dated 08/13/15, expiring on 09/30/19.
4. Notice of Acceptance No. **16-0712.02** issued to ENERGI Fenestration Solutions USA, Inc. for their "**TAN 3040 and Lighter Shades (Non-White) Rigid PVC Exterior Extrusions for Windows and Doors**" dated 09/15/16, expiring on 02/04/21.
5. Notice of Acceptance No. **16-0712.04** issued to ENERGI Fenestration Solutions USA, Inc. for their "**Bronze and Lighter Shades of Cap Coated Rigid PVC Exterior Extrusions for Windows and Doors**" dated 09/15/16, expiring on 04/16/20.
6. Notice of Acceptance No. **16-0712.03** issued to ENERGI Fenestration Solutions USA, Inc. for their "**White Rigid PVC Exterior Extrusions for Windows and Doors**" dated 08/10/17, expiring on 02/28/18.
7. Test reports No(s). 10-002-792(A), 10-06-M0527, 535753-09, per ASTME-84, ASTMD1929 and ASTMD-635, issued by EXOVA to Vision Extrusion for cellulosic composite material. ***(Submitted under NOA No. 11-0107.04)***
8. Notice of Acceptance No. **14-0916.11** issued to Kuraray America., Inc. for their "**SentryGlas® (Clear and White) Interlayer**", expiring on 07/04/18.
9. Notice of Acceptance No.**16-1117.01** issued to Kuraray America, Inc. for their "**Trosifol® Ultraclear, Clear and Color PVB Interlayers**", expiring on 07/08/19.

**Jorge M. Plasencia, P.E.**
**Product Control Unit Supervisor**
**NOA No. 17-0420.06**
**Expiration Date: April 14, 2021**
**Approval Date: September 28, 2017**

## NOTICE OF ACCEPTANCE: EVIDENCE SUBMITTED

### F. STATEMENTS

1. Statement letter of conformance with **FBC-5th Edition (2014)** and **FBC-6th Edition (2017)**, issued by manufacturer, dated 08/14/17, signed & sealed by Lynn Miller, P.E.
2. Statement letter of no financial interest, dated 04/18/17, issued by manufacturer, signed & sealed by Lynn Miller, P.E.
3. Letter of lab compliance, part of the above test reports.
4. RER Test Proposal No. 17-0387, dated 05/05/17, signed by Ishaq Chanda, P.E.

### G. OTHER

1. Notice of Acceptance No. **15-1210.01**, issued to PGT Industries, for their Series "**5570/2770" Vinyl Sliding Glass Door (Reinforced) – L.M.I.**", approved on 03/03/16 and expiring on 04/14/21.

**Jorge M. Plasencia, P.E.**
**Product Control Unit Supervisor**
**NOA No. 17-0420.06**
**Expiration Date: April 14, 2021**
**Approval Date: September 28, 2017**

# SERIES 5570 IMPACT RESISTANT SLIDING GLASS DOOR INCLUDING POCKETS & 90°/135° CORNERS

GENERAL NOTES:

1) GLAZING TYPE OPTIONS: SEE GLAZING DETAILS ON SHEET 10.
2) DESIGN PRESSURES:
A. NEGATIVE DESIGN LOADS BASED ON TESTED PRESSURE AND GLASS PER ASTM E1300.
B. POSITIVE DESIGN LOADS BASED ON WATER TEST PRESSURE AND GLASS PER ASTM E1300.
C. DESIGN LOADS ARE BASED ON ALLOWABLE STRESS DESIGN, ASD.
3) ANCHORAGE: THE 33-1/3% STRESS INCREASE HAS NOT BEEN USED IN THE DESIGN OF THIS PRODUCT. MATERIALS, INCLUDING BUT NOT LIMITED TO STEEL SCREWS, THAT COME INTO CONTACT WITH OTHER DISSIMILAR MATERIALS SHALL MEET THE REQUIREMENTS OF THE FLORIDA BUILDING CODE (FBC).
4) SHUTTERS ARE NOT REQUIRED PER FBC REQUIREMENTS, AS APPLICABLE.
5) INSTALLATION SCREWS & FRAME SPLICES TO BE SEALED WITH NARROW JOINT SEALANT.
6) REFERENCES (NOA'S): ELCO ULTRACON, CRETEFLEX & AGGREGATOR ANCHOR NOA'S, ENERGI FENESTRATION SOLUTIONS USA, INC. OR VISION EXTRUSION, LTD. WHITE RIGID PVC NOA, VE 1000 TAN 202 AND LIGHTER SHADES (NON-WHITE) RIGID PVC NOA AND BROWN COATED (PAINTED OR LAMINATED) WHITE RIGID PVC NOA
REFERENCES (TEST REPORTS): FTL-6337, 6338, 8646-8649, 8652 & 8717; EXOVA-10-002-792(A) & 10-006-10231; CAMBRIDGE 535753-09;
7) THIS PRODUCT HAS BEEN DESIGNED & TESTED TO COMPLY WITH THE REQUIREMENTS OF THE FBC, INCLUDING THE HIGH VELOCITY HURRICANE ZONE (HVHZ). THE RIGID WHITE, BROWN & TAN PVC MANUFACTURED BY ENERGI FENESTRATION SOLUTIONS USA, INC. OR VISION EXTRUSION, LTD. HAS BEEN TESTED TO COMPLY WITH THE FLORIDA BUILDING CODE FOR PLASTICS, (COMPONENT REQUIREMENTS).
8) DOOR SIZES MUST BE VERIFIED FOR COMPLIANCE WITH EGRESS REQUIREMENTS OF THE FBC, AS APPLICABLE.
9) DRAWINGS DEPICT EXTERIOR-GLAZING, HOWEVER INTERIOR-GLAZING MAY BE SUBSTITUTED.
10) THE 5570 SERIES SLIDING GLASS DOOR MAY ALSO BE KNOWN AS THE 570/2770 SERIES.

ANCHOR NOTES:

1) FOR CONCRETE/CMU SUBSTRATE APPLICATIONS IN MIAMI-DADE COUNTY, USE ONLY MIAMI-DADE COUNTY APPROVED ELCO ANCHORS. SEE TABLE A ON THIS SHEET FOR EMBEDMENT, EDGE DISTANCE AND SUBSTRATE REQUIREMENTS.
2) FOR OTHER SUBSTRATE APPLICATIONS SEE TABLE A ON THIS SHEET.
3) WOOD BUCKS DEPICTED AS 1X ARE LESS THAN 1-1/2" THICK. PROPERLY SECURED, 1X WOOD BUCKS ARE OPTIONAL IF UNIT IS INSTALLED DIRECTLY TO SOLID CONCRETE OR CMU. WOOD BUCKS DEPICTED AS 2X ARE 1-1/2" THICK OR GREATER. 1X AND 2X BUCKS (WHEN USED) SHALL BE DESIGNED TO PROPERLY TRANSFER LOADS TO THE STRUCTURE. BUCK DESIGN AND INSTALLATION IS THE RESPONSIBILITY OF THE ENGINEER OR ARCHITECT OF RECORD & TO BE REVIEWED BY THE BUILDING OFFICIAL.
4) METAL SUBSTRATE TO MEET MIN. STRENGTH AND THICKNESS REQUIREMENTS PER THE FBC AND TO BE REVIEWED BY THE AUTHORITY HAVING JURISDICTION.
5) IF SILL IS TIGHT TO SUBSTRATE, GROUT OR OTHER MATERIAL IS NOT REQUIRED. IF USED, NON-SHRINK, NON-METALLIC GROUT, MAX. 1/4" THICK & 3400 PSI MIN., (DONE BY OTHERS) MUST FULLY SUPPORT THE ENTIRE LENGTH OF THE SILL THAT IS NOT TIGHT TO THE SUBSTRATE, AND TRANSFER SHEAR LOAD TO SUBSTRATE. IF SUBSTRATE IS WOOD, 30# FELT PAPER OR MASTIC IS REQUIRED BETWEEN THE GROUT AND WOOD SUBSTRATE, OR AS APPROVED BY THE AUTHORITY HAVING JURISDICTION.

INSTRUCTIONS:

1) KNOWING THE REQUIRED DESIGN PRESSURE OF THE OPENING, THE ANCHOR REQUIREMENTS FOR THE SLIDING GLASS DOORS MAY BE DETERMINED FROM DESIGN PRESSURE TABLES 1 OR 2, DEPENDING ON THE GLASS/REINFORCEMENT.
2) LOCATE THE SLIDING GLASS DOOR SIZE ON THE TABLE, USING THE FRAME HEIGHT AND THE NOMINAL PANEL WIDTH IF YOUR EXACT SIZE IS NOT LISTED, ROUND UP TO THE NEXT GREATER LISTED WIDTH AND/OR HEIGHT.
3) CHOOSE WHICH ANCHOR GROUP (A-D) IS MOST APPLICABLE. ANCHORS ARE DEFINED IN TABLE A, THIS SHEET, ALONG WITH THE CORRESPONDING SUBSTRATE, MINIMUM EMBEDMENT AND MINIMUM EDGE DISTANCE.
4) FROM THE DESIGN PRESSURE TABLES (TABLES 1 OR 2), VERIFY THAT THE OPENING'S REQUIRED DESIGN PRESSURE IS MET OR EXCEEDED. USE THE ANCHOR QUANTITIES SHOWN.
5) INSTALL AS PER THE GUIDELINES OF THIS SHEET-SET.
6) ADDITIONALLY, SEE THE EXAMPLE ON SHEET 9.

TABLE A:

| Group | Anchor | Substrate | Frame Member | Min. Edge Distance | Min. Embedment |
|---|---|---|---|---|---|
| A | #12, steel SMS (G5) or 410 S.S. SMS (min. 11 threads/in) | P.T. Southern Pine (SG=0.55) | Head/Sill/Jamb | 9/16" | 1-3/8" |
| | | | P-hook | 9/16" | 1-3/8" |
| | | Aluminum, 6063-T5* (0.125" min. thickness) | Head/Sill/Jamb | 3/8" | 1/8" |
| | | | P-hook | 3/8" | 1/8" |
| | | Steel, A36* (0.060" min. thickness) | Head/Sill/Jamb | 3/8" | 0.060" |
| | | | P-hook | 3/8" | 0.060" |
| | | Steel Stud, A653 Gr. 33* (0.071" min. thickness) | Head/Sill/Jamb | 3/8" | 0.071" (14 Ga.) |
| | | | P-hook | 3/8" | 0.071" (14 Ga.) |
| | 1/4" Elco Ultracon | P.T. Southern Pine (SG=0.55) | Jamb | 1" | 1-3/8" |
| | | | P-hook | 1" | 1-3/8" |
| | 1/4" Elco 410 S.S. CreteFlex | P.T. Southern Pine (SG=0.55) | Head/Sill/Jamb | 1" | 1-3/8" |
| | | | P-hook | 1" | 1-3/8" |
| B | #12, steel wood screw (G5) | P.T. Southern Pine (SG=0.55) | Head/Sill/Jamb | 9/16" | 1-3/8" |
| | | | P-hook | 9/16" | 1-3/8" |
| C | 1/4" Elco Ultracon | Concrete (min. 2.85 ksi) | P-hook | 1" | 1-3/8" |
| | | | Head/Sill/Jamb | 1-3/16" | 1-3/8" |
| | | Ungrouted CMU, (ASTM C-90) | Jamb | 1" | 1-1/4" |
| | | | P-hook | 1" | 1-1/4" |
| | 1/4" Elco 410 S.S. CreteFlex | Ungrouted CMU, (ASTM C-90) | Jamb | 1-3/4" | 1-1/4" |
| | | | P-hook | 1-3/4" | 1-1/4" |
| | | Concrete (min. 3.35 ksi) | Head/Sill/Jamb | 1-3/16" | 1-3/4" |
| | | | P-hook | 1" | 1-3/4" |
| | 1/4" Elco 18-8 S.S. Aggre-Gator | Concrete (min. 2.22 ksi) | Head/Sill/Jamb | 1-1/2" | 1-3/8" |
| | | | P-hook | 1-1/2" | 1-3/8" |
| | | Ungrouted CMU, (ASTM C-90) | Jamb | 2" | 1-1/4" |
| | | | P-hook | 2" | 1-1/4" |
| | | P.T. Southern Pine (SG=0.55) | Head/Sill/Jamb | 1" | 1-3/8" |
| | | | P-hook | 1" | 1-3/8" |
| D | 1/4" Elco Ultracon | Concrete (min. 2.85 ksi) | Head/Sill/Jamb | 2-1/2" | 1-3/8" |
| | | | P-hook | 2-1/2" | 1-3/8" |
| | | Ungrouted CMU, (ASTM C-90) | Jamb | 2-1/2" | 1-1/4" |
| | | | P-hook | 2-1/2" | 1-1/4" |
| | 1/4" Elco 410 S.S. CreteFlex | Concrete (min. 3.35 ksi) | Head/Sill/Jamb | 2-1/2" | 1-3/4" |
| | | | P-hook | 2-1/2" | 1-3/8" |
| | | Ungrouted CMU, (ASTM C-90) | Jamb | 2-1/2" | 1-1/4" |
| | | | P-hook | 2-1/2" | 1-1/4" |

* MIN. OF 3 THREADS BEYOND THE METAL SUBSTRATE. METAL SUBSTRATE TO MEET MIN. STRENGTH AND THICKNESS REQUIREMENTS PER CURRENT FLORIDA BUILDING CODE AND TO BE REVIEWED BY THE AUTHORITY HAVING JURISDICTION.

"UNGROUTED CMU" VALUES MAY BE USED FOR GROUTED CMU APPLICATIONS.

| Material | Min. $F_y$ | Min. $F_u$ |
|---|---|---|
| Steel Screw | 92 ksi | 120 ksi |
| 410 Screw | 90 ksi | 110 ksi |
| Elco Aggre-Gator® | 57 ksi | 96 ksi |
| Elco UltraCon® | 155 ksi | 177 ksi |
| 410 SS Elco CreteFlex® | 127.4 ksi | 189.7 ksi |
| 6063-T5 Aluminum | 16 ksi | 22 ksi |
| A36 Steel | 36 ksi | 58 ksi |
| Gr. 33 Steel Stud | 33 ksi | 45 ksi |

CODES / STANDARDS USED:

- 2017 FLORIDA BUILDING CODE (FBC), 6TH EDITION
- 2014 FLORIDA BUILDING CODE (FBC), 5TH EDITION
- ASTM E1300-09
- ANSI/AF&PA NDS-2015 FOR WOOD CONSTRUCTION
- ALUMINUM DESIGN MANUAL, ADM-2015
- AISI S100-12
- AISC 360-10

IMPACT RATING

RATED FOR LARGE & SMALL MISSILE IMPACT RESISTANCE

DESIGN PRESSURE RATING

SEE TABLES 1, 2 & B1, B2 ON SHEETS 7 & 8



**PRODUCT REVISED**
**as complying with the Florida Building Code**
**NOA-No. 17-0420.06**
**Expiration Date 04/14/2021**
**By**
**Miami-Dade Product Control**

ANTHONY LYNN MILLER LICENSE No. 58705 STATE OF FLORIDA PROFESSIONAL ENGINEER
4/18/17

A. LYNN MILLER, P.E.
P.E.# 58705




1070 TECHNOLOGY DR
N. VENICE, FL 34275
(941)-480-1600
CERT. OF AUTH. #29296


| | | | |
|---|---|---|---|
| Title | VINYL SLIDING GLASS DOOR NOA (LM) | Date | 10/05/15 |
| Desc. | GENERAL NOTES | Drawn By | J ROSOWSKI |
| Rev | UPDATED TO FBC 2017, VINYL MFG. | Rev Date | 04/05/17 |
| Rev | | Rev Date | |

| | | | | | | | | | |
|---|---|---|---|---|---|---|---|---|---|
| Series | SGD-5570 | Scale | NTS | Sheet | 1 OF 21 | DWG No. | MD-5570.0 | Rev. No. | A |

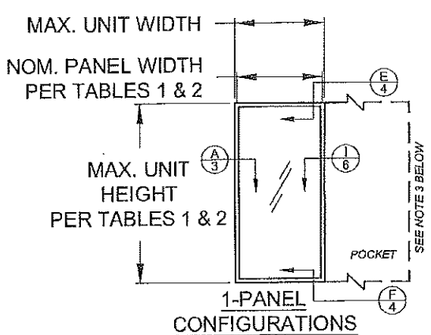


1-PANEL CONFIGURATIONS

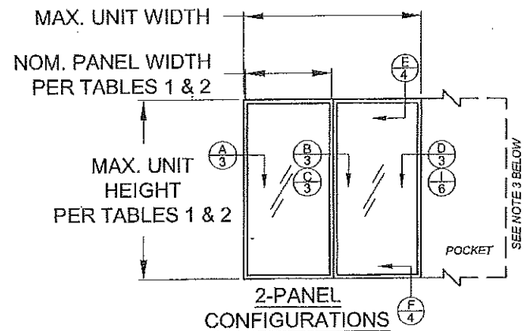


2-PANEL CONFIGURATIONS

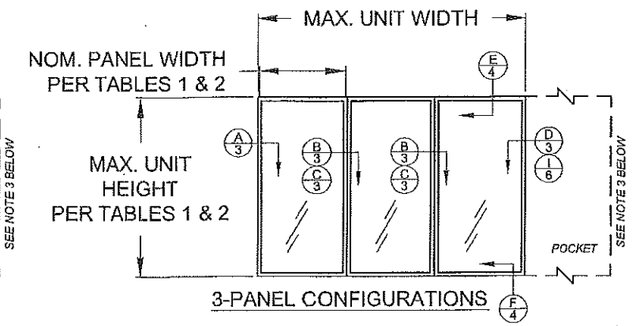


3-PANEL CONFIGURATIONS

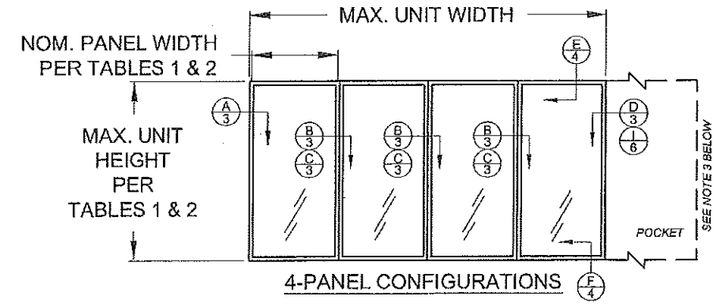


4-PANEL CONFIGURATIONS

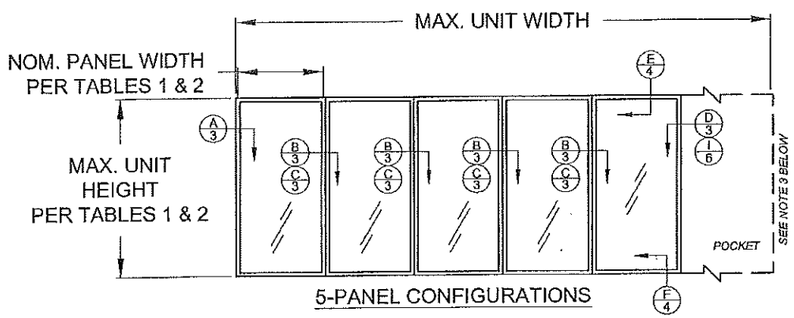


5-PANEL CONFIGURATIONS

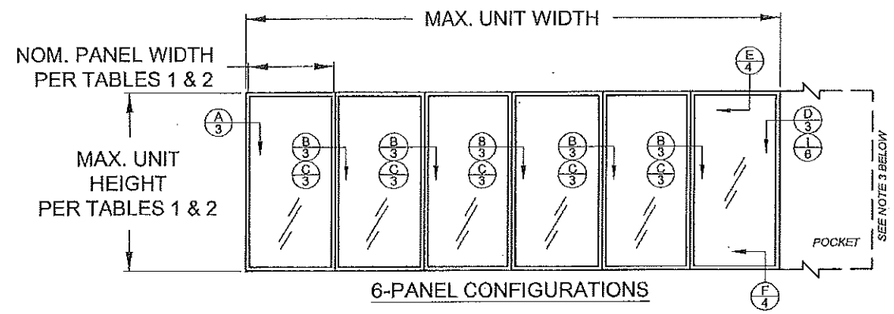


6-PANEL CONFIGURATIONS

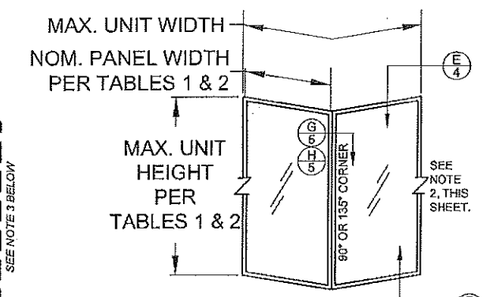


CORNER, TYP.

OUTSIDE CORNER SHOWN, INSIDE CORNER SIMILAR

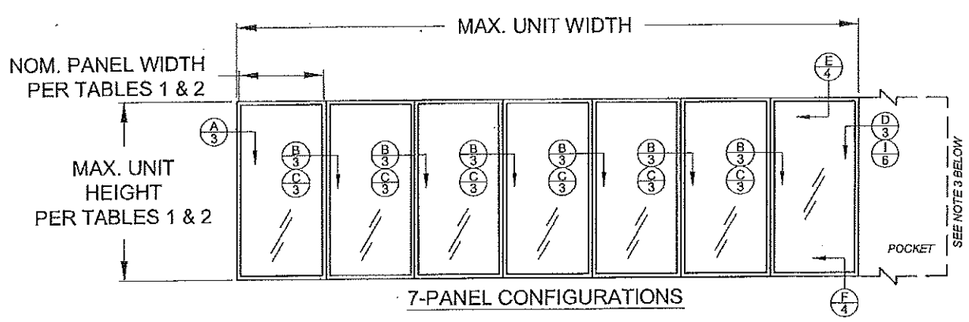


7-PANEL CONFIGURATIONS

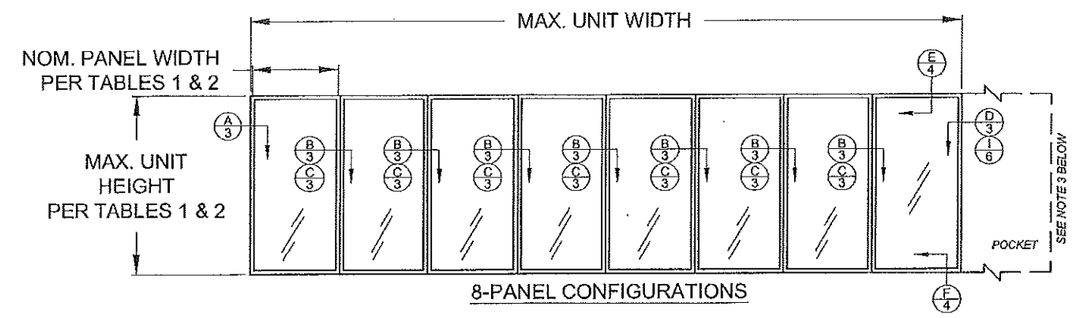


8-PANEL CONFIGURATIONS

**PRODUCT REVISED**
**as complying with the Florida Building Code**
**NOA-No. 17-0420.06**
**Expiration Date 04/14/2021**
**By**
**Miami-Dade Product Control**

CONFIGURATIONS NOTES:

1) ALL CONFIGURATIONS SHOWN ARE ALSO AVAILABLE AS POCKET CONFIGURATIONS AT EITHER OR BOTH JAMB LOCATIONS. EXAMPLE: 4-PANEL XXXX IN POCKET (p) CONFIGURATION CAN BE pXXXXp, pXXXX OR XXXXp. OXXX IN POCKET CONFIGURATION CAN BE OXXXp.

2) 90° & 135° CORNER CONFIGURATIONS ARE A COMBINATION OF ANY 2 STRAIGHT CONFIGURATIONS.

3) POCKET WALL OR CAVITY IS NOT PART OF THIS APPROVAL AND IS TO BE DESIGNED BY OTHERS AND REVIEWED BY THE AUTHORITY HAVING JURISDICTION.

4) FOR NOM. PANEL WIDTH, SEE TABLES 1 & 2.

5) MAX. ALLOWABLE FRAME SQUARE FOOTAGE = 472.656 FT²

"X" = OPERABLE PANEL
"O" = INOPERABLE PANEL
"p" = POCKET

X — DETAIL LETTER
# — SHEET NUMBER

DLO WIDTH = NOM. PANEL WIDTH - 8-9/16"
NOM. PANEL WIDTH = PANEL WIDTH + 1-3/16"
DLO HEIGHT = DOOR HEIGHT - 11-1/16"
PANEL HEIGHT = DOOR HEIGHT - 2-1/2"



1070 TECHNOLOGY DR
N. VENICE, FL 34275
(941)-480-1600
CERT. OF AUTH. #29296

| | | | | | |
|---|---|---|---|---|---|
| Title | VINYL SLIDING GLASS DOOR NOA (LM) | | | Date | 10/05/15 |
| Desc. | EXAMPLE CONFIGURATIONS | | Drawn By | J ROSOWSKI | |
| Rev | NO CHANGES THIS SHEET. | | Rev Date | 04/05/17 | |
| Rev | | | Rev Date | | |
| Series | SGD-5570 | Scale NTS | Sheet 2 OF 21 | DWG No. MD-5570.0 | Rev. No. A |

ANTHONY LYNN MILLER
LICENSE
No. 58705
4/18/17
STATE OF FLORIDA
PROFESSIONAL ENGINEER

A. LYNN MILLER, P.E.
P.E.# 58705

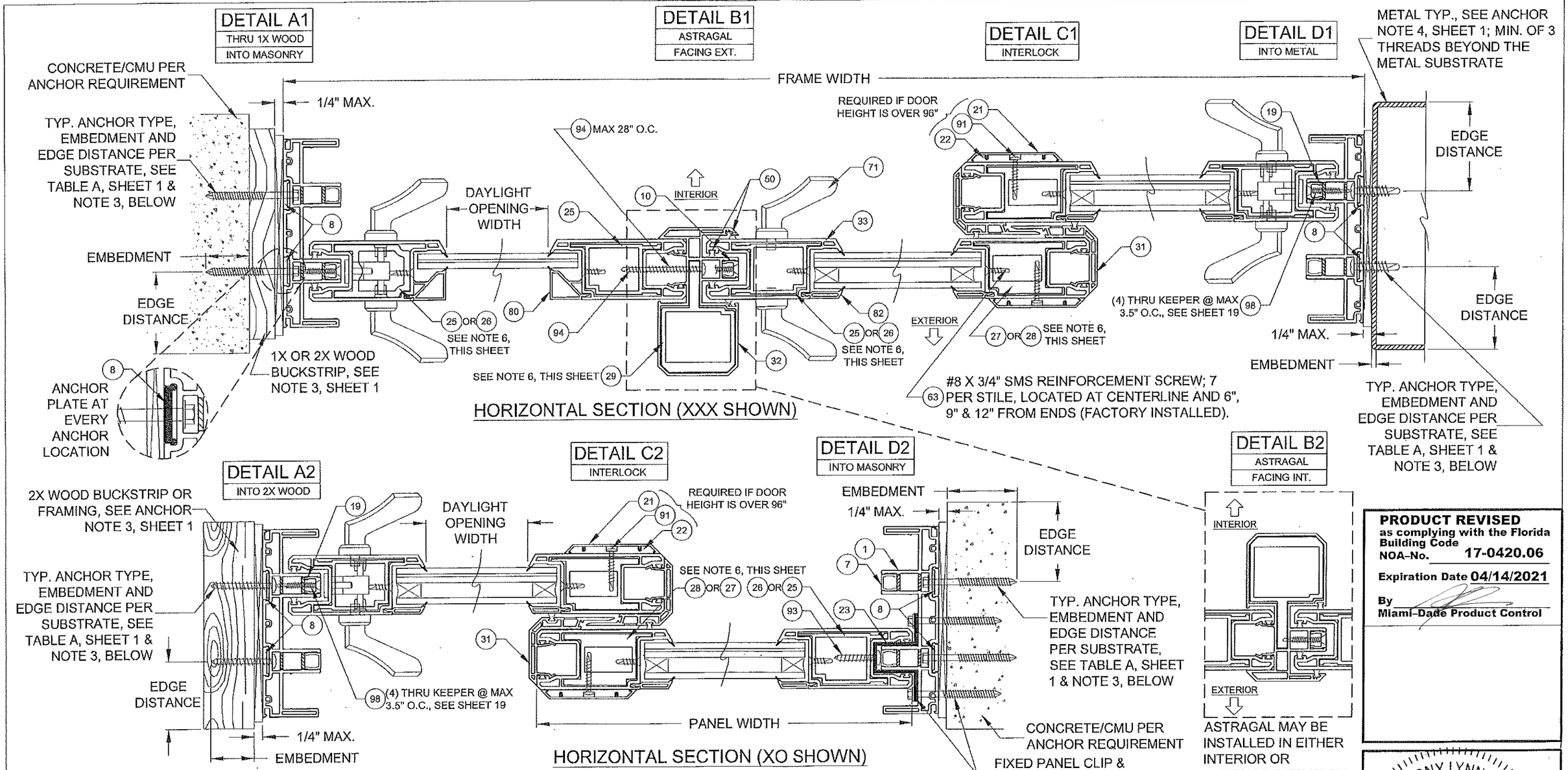


**PRODUCT REVISED**
as complying with the Florida Building Code
NOA-No. 17-0420.06
Expiration Date 04/14/2021
By
Miami-Dade Product Control

NOTES
1) DETAILS APPLY TO 2, 3 AND 4 TRACK CONFIGURATIONS.
2) REFER TO ANCHOR NOTES, SHEET 1.
3) SEE SHEET 13 FOR ANCHOR LOCATION & SPACING, FOR ANCHOR QUANTITIES, SEE TABLES 1 & 2.
4) CONTINUOUS ANCHOR PLATE, ITEM #8, IS REQUIRED AT ALL FRAME ANCHOR LOCATIONS.
5) PANEL WIDTH DOES NOT INCLUDE INTERLOCK OR ASTRAGAL ADD-ON.
6) SEE TABLES 1 & 2 FOR REINFORCEMENT REQUIREMENTS. ALL REINFORCEMENTS ARE APPROXIMATELY THE FULL LENGTH OF THE EXTRUSION. REFER TO TEST REPORTS FOR EXACT DIMENSIONS.
7) SEE SHEET 20 FOR SCREEN DETAILS.

REINFORCEMENT TYPES (SEE NOTE 6, THIS SHEET)

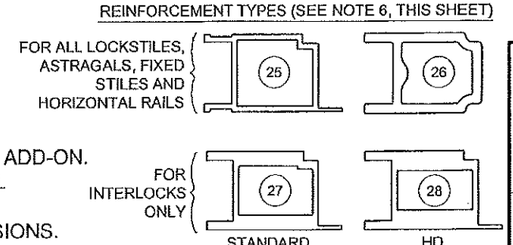



1070 TECHNOLOGY DR
N. VENICE, FL 34275
(941)-480-1600
CERT. OF AUTH. #29296

| | | | |
|---|---|---|---|
| Title | VINYL SLIDING GLASS DOOR NOA (LM) | Date | 10/05/15 |
| Desc. | INSTALLATION, HORIZONTAL X-SECT. | Drawn By | J ROSOWSKI |
| Rev | NO CHANGES THIS SHEET. | Rev Date | 04/05/17 |
| Rev | | Rev Date | |

| | | | | | | | | | |
|---|---|---|---|---|---|---|---|---|---|
| Series | SGD-5570 | Scale | NTS | Sheet | 3 OF 21 | DWG No. | MD-5570.0 | Rev. No. | A |

ANTHONY LYNN MILLER
LICENSE
No. 58705
STATE OF FLORIDA
PROFESSIONAL ENGINEER
A. LYNN MILLER, P.E.
P.E.# 58705

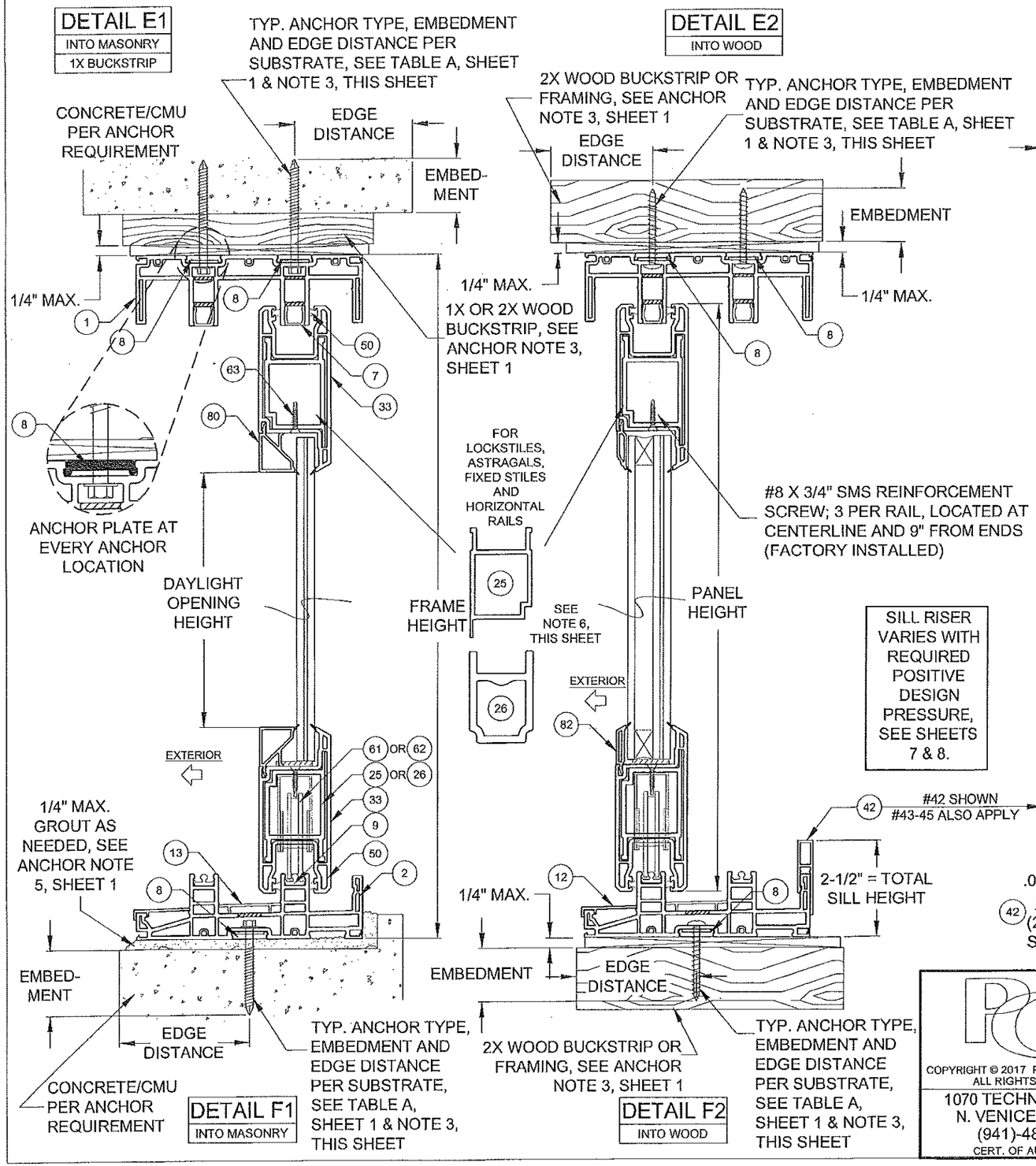


NOTES

1) DETAILS APPLY TO 2, 3 AND 4 TRACK CONFIGURATIONS.
2) REFER TO ANCHOR NOTES, SHEET 1.
3) SEE SHEETS 11 & 12 FOR ANCHOR LOCATION & SPACING, FOR ANCHOR QUANTITIES, SEE TABLES 1 & 2.
4) CONTINUOUS ANCHOR PLATE, ITEM #8, IS REQUIRED AT ALL FRAME ANCHOR LOCATIONS.
5) SEE SHEET 20 FOR SCREEN DETAILS.
6) SEE TABLES 1 & 2 FOR REINFORCEMENT REQUIREMENTS. ALL REINFORCEMENTS ARE APPROXIMATELY THE FULL LENGTH OF THE EXTRUSION. REFER TO TEST REPORTS FOR EXACT DIMENSIONS.

DLO WIDTH = NOM. PANEL WIDTH - 8-9/16"
DLO HEIGHT = DOOR HEIGHT - 11-1/16"
PANEL HEIGHT = DOOR HEIGHT - 2-1/2"

**PRODUCT REVISED**
as complying with the Florida Building Code
NOA-No. 17-0420.06
Expiration Date 04/14/2021
By
Miami-Dade Product Control



1070 TECHNOLOGY DR
N. VENICE, FL 34275
(941)-480-1600
CERT. OF AUTH. #29296

| | | | |
|---|---|---|---|
| Title | VINYL SLIDING GLASS DOOR NOA (LM) | Date | 10/05/15 |
| Desc. | INSTALLATION, VERTICAL X-SECT. | Drawn By | J ROSOWSKI |
| Rev | NO CHANGES THIS SHEET. | Rev Date | 04/05/17 |
| Rev | | Rev Date | |

| Series | Scale | Sheet | DWG No. | Rev. No. |
|---|---|---|---|---|
| SGD-5570 | NTS | 4 OF 21 | MD-5570.0 | A |

ANTHONY LYNN MILLER
LICENSE
No. 58705
STATE OF FLORIDA
PROFESSIONAL ENGINEER

A. LYNN MILLER, P.E.
P.E.# 58705

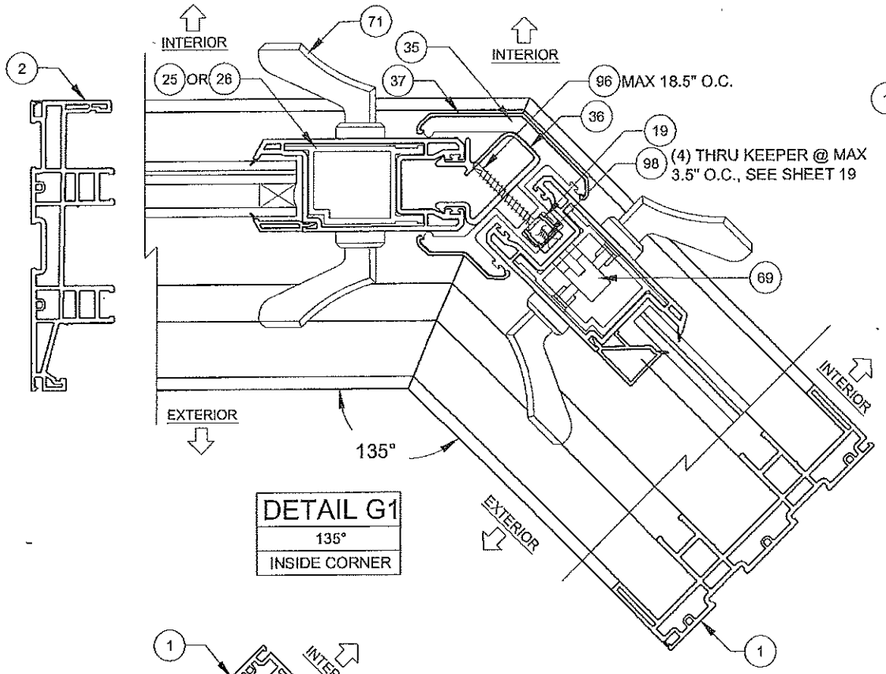


DETAIL G1
135°
INSIDE CORNER

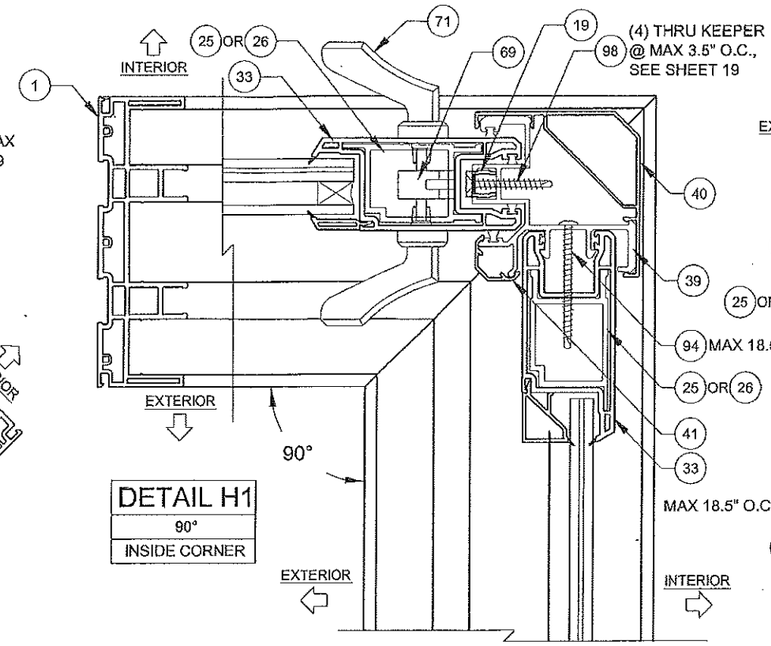


DETAIL H1
90°
INSIDE CORNER

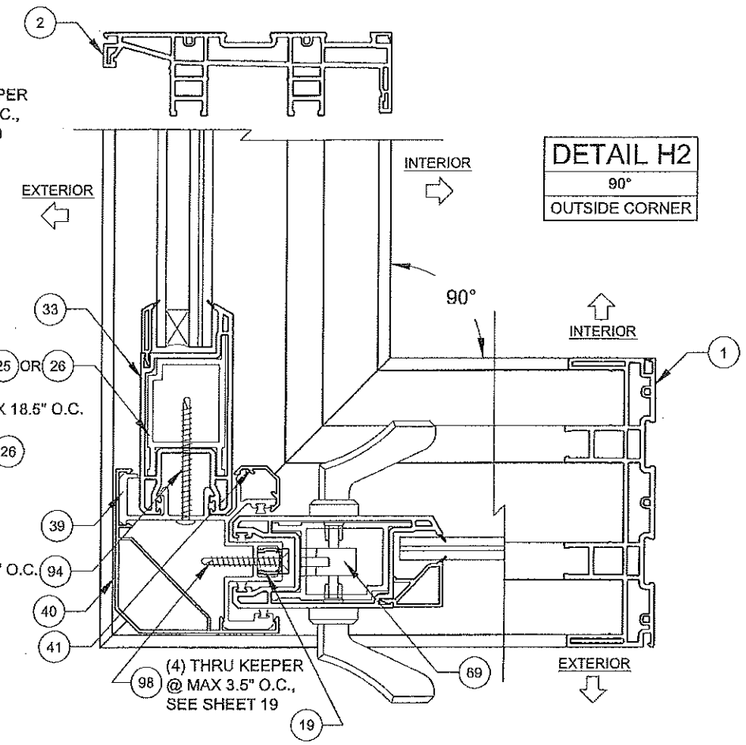


DETAIL H2
90°
OUTSIDE CORNER

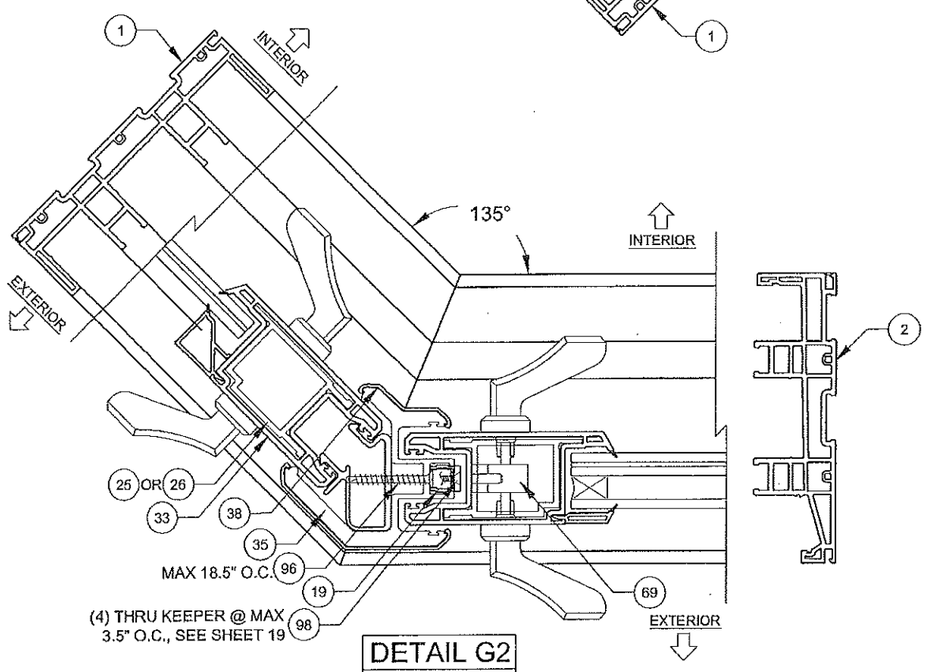


DETAIL G2
135°
OUTSIDE CORNER

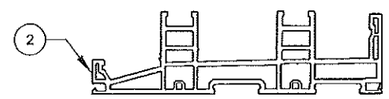


**PRODUCT REVISED**
as complying with the Florida Building Code
NOA-No. 17-0420.06
Expiration Date 04/14/2021
By
Miami-Dade Product Control

NOTES
1) DETAILS APPLY TO 2, 3 AND 4 TRACK CONFIGURATIONS.
2) SEE SHEETS 14 & 15 FOR ANCHOR LOCATION & SPACING, FOR ANCHOR QUANTITIES, SEE TABLES 1 & 2.
3) CORNER ASTRAGAL MAY BE EITHER TO THE INTERIOR OR EXTERIOR, DEPENDING ON CONFIGURATION.


1070 TECHNOLOGY DR
N. VENICE, FL 34275
(941)-480-1600
CERT. OF AUTH. #29296

| | | | |
|---|---|---|---|
| Title | VINYL SLIDING GLASS DOOR NOA (LM) | Date | 10/05/15 |
| Dsc. | CORNER ASTRAGAL HORIZ. X-SECT. | Drawn By | J ROSOWSKI |
| Rev | NO CHANGES THIS SHEET. | Rev Date | 04/05/17 |
| Rev | | Rev Date | |

| | | | | | | | | | |
|---|---|---|---|---|---|---|---|---|---|
| Series | SGD-5570 | Scale | NTS | Sheet | 5 OF 21 | DWG No. | MD-5570.0 | Rev. No. | A |

ANTHONY LYNN MILLER
LICENSE
No. 58705
4/19/17
STATE OF FLORIDA
PROFESSIONAL ENGINEER

A. LYNN MILLER, P.E.
P.E.# 58705

## DETAIL I1
INTO MASONRY

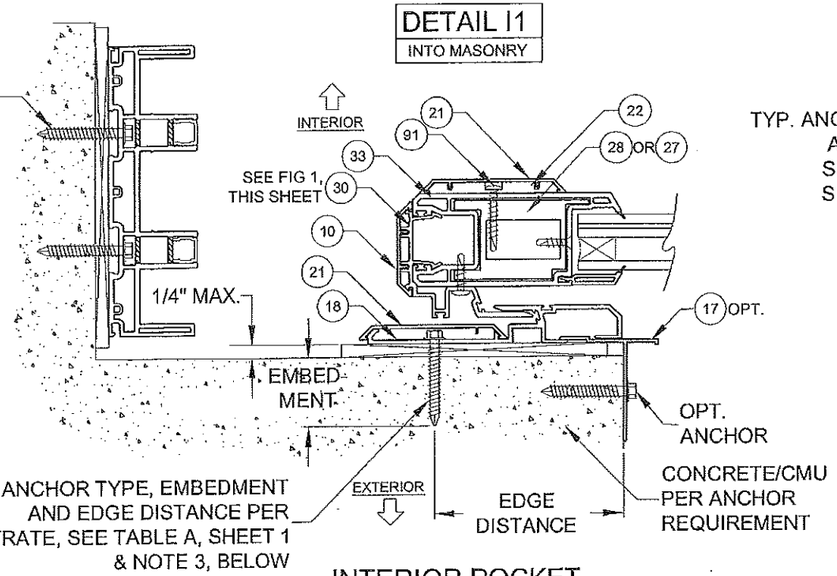


INTERIOR POCKET

## DETAIL I2
INTO MASONRY

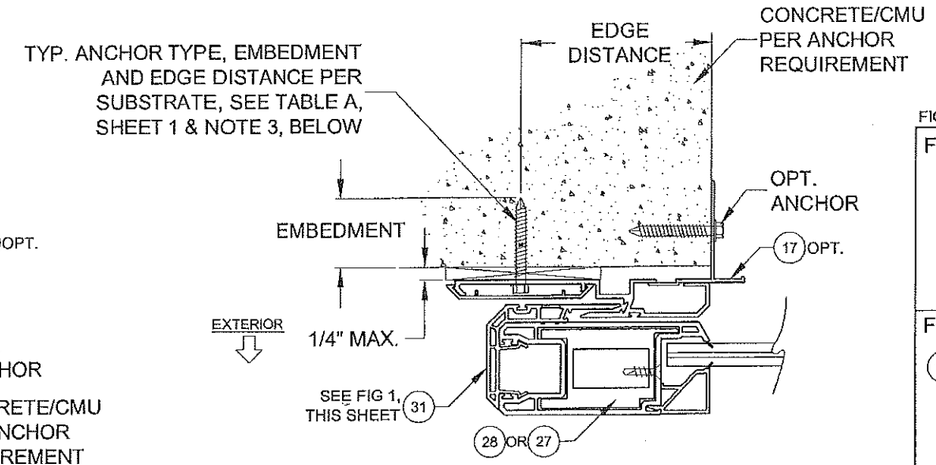


EXTERIOR POCKET

FIGURE 1, INTERLOCKS AT POCKETS:

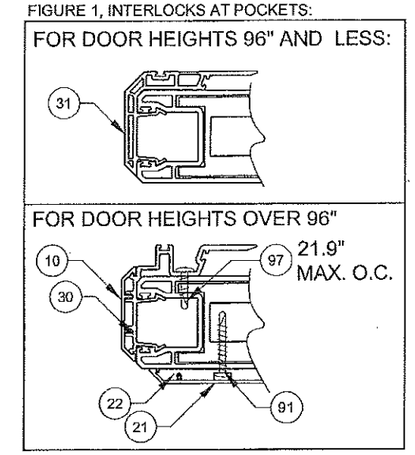


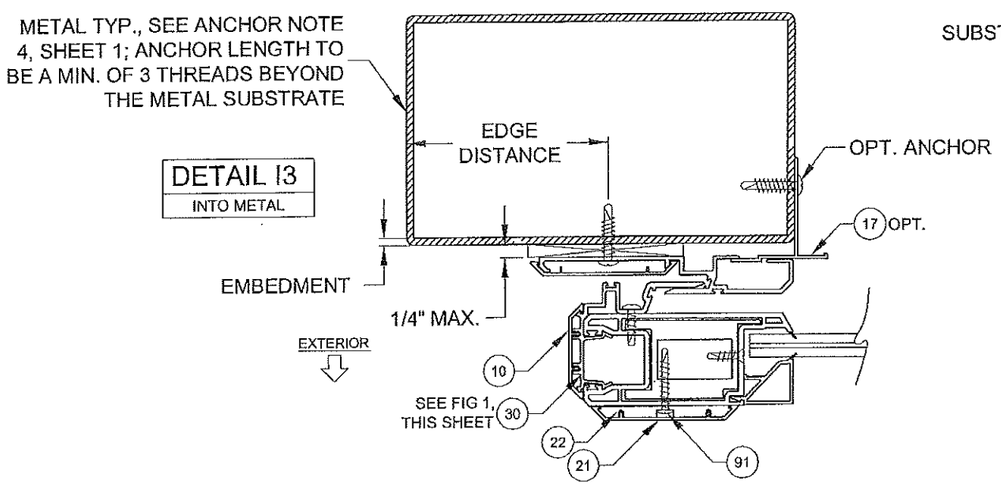


## DETAIL I3
INTO METAL

EXTERIOR POCKET

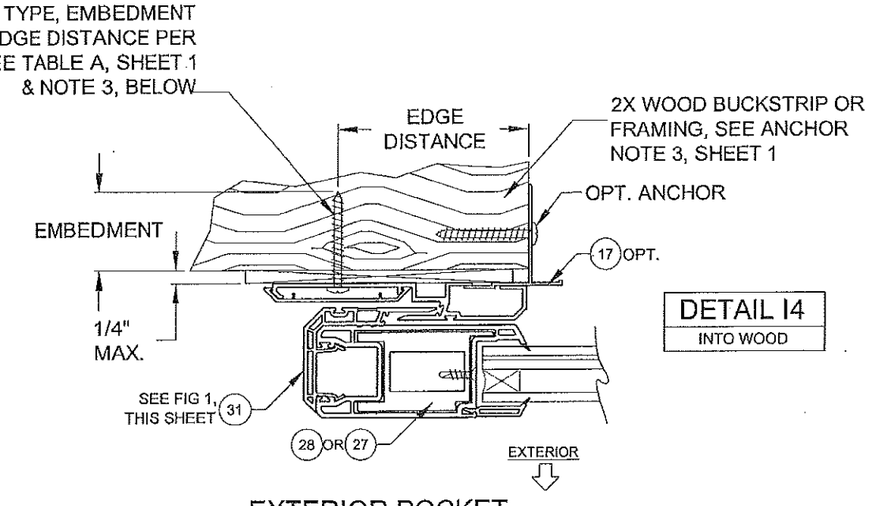


## DETAIL I4
INTO WOOD

EXTERIOR POCKET

**PRODUCT REVISED**
**as complying with the Florida Building Code**
**NOA-No. 17-0420.06**
**Expiration Date 04/14/2021**
**By**
**Miami-Dade Product Control**

NOTES
1) DETAILS APPLY TO 2, 3 AND 4 TRACK CONFIGURATIONS.
2) REFER TO ANCHOR NOTES, SHEET 1.
3) SEE SHEET 13 FOR ANCHOR LOCATION & SPACING, FOR ANCHOR QUANTITIES, SEE TABLES 1 & 2.
4) SEE TABLES 1 & 2 FOR REINFORCEMENT REQUIREMENTS.
5) INTERIOR OR EXTERIOR POCKETS APPLICABLE FOR ALL INSTALLATION METHODS.
6) POCKET WALL OR CAVITY IS NOT PART OF THIS APPROVAL AND IS TO BE DESIGNED BY OTHERS AND REVIEWED BY THE AUTHORITY HAVING JURISDICTION.


1070 TECHNOLOGY DR
N. VENICE, FL 34275
(941)-480-1600
CERT. OF AUTH. #29296

| | | | | | |
|---|---|---|---|---|---|
| Title | VINYL SLIDING GLASS DOOR NOA (LM) | | | Date | 10/05/15 |
| Desc. | P-HOOK EXAMPLES, HORIZ. X-SECT. | | Drawn By | J ROSOWSKI | |
| Rev | NO CHANGES THIS SHEET. | | | Rev Date | 04/05/17 |
| Rev | | | | Rev Date | |
| Series | SGD-5570 | Scale NTS | Sheet 6 OF 21 | DWG No. MD-5570.0 | Rev. No. A |

ANTHONY LYNN MILLER
LICENSE
No. 58705
STATE OF FLORIDA
PROFESSIONAL ENGINEER

A. LYNN MILLER, P.E.
P.E.# 58705

TABLE 1:

## Design Pressure (DP) and Anchor Quantities Required,

(for all approved configurations on Sheet 2)

| Use this table for: | | | | Door Unit Height | | | | | | | | | | | |
|---|---|---|---|---|---|---|---|---|---|---|---|---|---|---|---|
| Glass Types 1, 1A, 3 or 3A | | | | 80" | | | | 84" | | | | 96" | | | |
| Astragal Reinforcement #29 | | | | 68-15/16" DLO Height | | | | 72-15/16" DLO Height | | | | 84-15/16" DLO Height | | | |
| Lockstile Reinforcement #25 or #26 | | | | Anchor Group | | | | Anchor Group | | | | Anchor Group | | | |
| Std. Interlock Reinforcement #27 | | | | A | B | C | D | A | B | C | D | A | B | C | D |
| Nominal Panel Width | 24" | 19-1/8" DLO Width | *Design Pressure* | *+60 / -60 psf* | | | | *+60 / -60 psf* | | | | *+60 / -60 psf* | | | |
| | | | Head/Sill | C3+1 | C3+1 | C3+1 | C3+1 | C3+1 | C3+1 | C3+1 | C3+1 | C3+1 | C3+1 | C3+1 | C3+1 |
| | | | Jamb | 5 | 5 | 5 | 5 | 5 | 5 | 5 | 5 | 5 | 5 | 5 | 5 |
| | | | P-hook | 7 | 7 | 7 | 7 | 7 | 7 | 7 | 7 | 8 | 8 | 8 | 8 |
| | 30" | 25-1/8" DLO Width | *Design Pressure* | *+60 / -60 psf* | | | | *+60 / -60 psf* | | | | *+60 / -60 psf* | | | |
| | | | Head/Sill | C3+1 | C3+1 | C3+1 | C3+1 | C3+1 | C3+1 | C3+1 | C3+1 | C3+1 | C3+1 | C3+1 | C3+1 |
| | | | Jamb | 5 | 5 | 5 | 5 | 5 | 5 | 5 | 5 | 5 | 5 | 5 | 5 |
| | | | P-hook | 7 | 7 | 7 | 7 | 7 | 7 | 7 | 7 | 8 | 8 | 8 | 8 |
| | 36" | 31-1/8" DLO Width | *Design Pressure* | *+60 / -60 psf* | | | | *+60 / -60 psf* | | | | *+60 / -60 psf* | | | |
| | | | Head/Sill | C3+1 | C3+1 | C3+1 | C3+1 | C3+1 | C3+1 | C3+1 | C3+1 | C3+1 | C3+1 | C3+1 | C3+1 |
| | | | Jamb | 5 | 5 | 5 | 5 | 5 | 5 | 5 | 5 | 5 | 5 | 5 | 5 |
| | | | P-hook | 7 | 7 | 7 | 7 | 7 | 7 | 7 | 7 | 8 | 8 | 8 | 8 |
| | 42" | 37-1/8" DLO Width | *Design Pressure* | *+60 / -60 psf* | | | | *+60 / -60 psf* | | | | *+60 / -60 psf* | | | |
| | | | Head/Sill | C3+1 | C3+1 | C3+1 | C3+1 | C3+1 | C3+1 | C3+1 | C3+1 | C3+1 | C3+1 | C3+1 | C3+1 |
| | | | Jamb | 5 | 5 | 5 | 5 | 5 | 5 | 5 | 5 | 5 | 5 | 5 | 5 |
| | | | P-hook | 7 | 7 | 7 | 7 | 7 | 7 | 7 | 7 | 8 | 8 | 8 | 8 |
| | 48" | 43-1/8" DLO Width | *Design Pressure* | *+60 / -60 psf* | | | | *+60 / -60 psf* | | | | *+60 / -60 psf* | | | |
| | | | Head/Sill | C3+2 | C3+1 | C3+1 | C3+1 | C3+2 | C3+1 | C3+1 | C3+1 | C5+2 | C3+1 | C3+1 | C3+1 |
| | | | Jamb | 5 | 5 | 5 | 5 | 5 | 5 | 5 | 5 | 5 | 5 | 6 | 5 |
| | | | P-hook | 7 | 7 | 7 | 7 | 7 | 7 | 7 | 7 | 8 | 8 | 8 | 8 |

USED IN EXAMPLE ON SHEET 9

ANCHORAGE TYPE PER SUBSTRATE REQUIRED TO ACHIEVE THE DESIGN PRESSURE, USING THE ANCHOR QUANTIES LISTED BELOW. SEE TABLE A, SHEET 1 FOR COMPLETE ANCHOR LIMITATIONS.

THE MAXIMUM DP AT THESE ANCHOR QUANTITIES. ADDITIONALLY, THE MAXIMUM POSITIVE DP DUE TO THE SILL HEIGHT MUST ALSO BE CONSIDERED, SEE TABLE B1, THIS SHEET.

# OF ANCHORS THROUGH THE HEAD & SILL. (EX: FOR C3+1, 3 ANCHORS CLUSTERED AT PANEL MEETING POINT AND 1 ANCHOR REQUIRED AT MIDSPAN OF PANEL).

TOTAL # OF ANCHORS THROUGH THE JAMB.

THE # OF ANCHORS REQUIRED THROUGH THE P-HOOK, PERPENDICULAR TO THE GLASS.

TABLE B1:

| Water-Limited (+) Design Pressure | | |
|---|---|---|
| Sill Riser | Nom. Sill Height | Max. (+) DP Allowed |
| None | 1-11/16" | See Note 2 |
| 42 | 2-1/2" | +38.7 psf |
| 43 | 3-1/2" | +60.0 psf |
| 44 | 4-1/16" | +60.0 psf |
| 45 | 4-5/8" | +60.0 psf |

FIG 1:

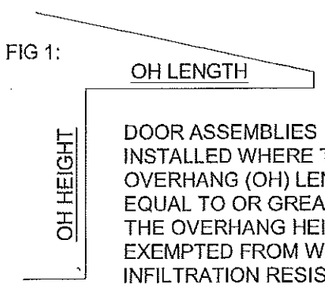


DOOR ASSEMBLIES INSTALLED WHERE THE OVERHANG (OH) LENGTH IS EQUAL TO OR GREATER THAN THE OVERHANG HEIGHT IS EXEMPTED FROM WATER INFILTRATION RESISTANCE.

**PRODUCT REVISED**
**as complying with the Florida Building Code**
**NOA-No. 17-0420.06**
**Expiration Date 04/14/2021**
**By**
**Miami-Dade Product Control**

DLO WIDTH = NOM. PANEL WIDTH - 8-9/16"
DLO HEIGHT = DOOR HEIGHT - 11-1/16"
PANEL HEIGHT = DOOR HEIGHT - 2-1/2"

TABLE NOTES:

1) IF WATER INFILTRATION RESISTANCE IS REQUIRED,THE LESSER VALUES OF EITHER TABLE 1 AND TABLE B1 DETERMINES THE WATER LIMITED (+) DP.
2) IF WATER INFILTRATION RESISTANCE IS NOT REQUIRED OR OVERHANG IS PER FIG 1, A SILL RISER IS NOT REQUIRED. IF SO, +DP'S SHOWN IN TABLE 1 MAY BE USED.
3) SEE SILL RISER TYPES ON SHEET 4.
4) SHEET APPLIES TO 2, 3 AND 4 TRACK CONFIGURATIONS.
5) REFER TO ANCHOR NOTES, SHEET 1.
6) SEE SHEETS 11-16 FOR ANCHOR LOCATION & SPACING


1070 TECHNOLOGY DR
N. VENICE, FL 34275
(941)-480-1600
CERT. OF AUTH. #29296

| | | | | | |
|---|---|---|---|---|---|
| Title | VINYL SLIDING GLASS DOOR NOA (LM) | | | Date | 10/05/15 |
| Desc. | DP & ANCHOR QUANTITY TABLE | | | Drawn By | J ROSOWSKI |
| Rev | NO CHANGES THIS SHEET. | | | Rev Date | 04/05/17 |
| Rev | | | | Rev Date | |
| Series | SGD-5570 | Scale NTS | Sheet 7 OF 21 | DWG No. MD-5570.0 | Rev. No. A |

ANTHONY LYNN MILLER
LICENSE
No. 58705
STATE OF FLORIDA
PROFESSIONAL ENGINEER
4/18/17

A. LYNN MILLER, P.E.
P.E.# 58705

TABLE 2:

## Design Pressure (DP) and Anchor Quantities Required,

(for all approved configurations on Sheet 2)

Use this table for:
Glass Types 2 or 4
Astragal Reinforcement #29
Lockstile Reinforcement #25
HD Interlock Reinforcement #28

| Nominal Panel Width | | Door Unit Height | 80" | | | | 84" | | | | 96" | | | | 108" | | | | 120" | | | |
|---|---|---|---|---|---|---|---|---|---|---|---|---|---|---|---|---|---|---|---|---|---|---|
| | | | 68-15/16" DLO Height | | | | 72-15/16" DLO Height | | | | 84-15/16" DLO Height | | | | 96-15/16" DLO Height | | | | 108-15/16" DLO Height | | | |
| | | | Anchor Group | | | | Anchor Group | | | | Anchor Group | | | | Anchor Group | | | | Anchor Group | | | |
| | | | A | B | C | D | A | B | C | D | A | B | C | D | A | B | C | D | A | B | C | D |
| 24" | 19-1/8" DLO Width | *Design Pressure* | *+100 / -100 psf* | | | | *+100 / -100 psf* | | | | *+100 / -100 psf* | | | | *+60 / -65 psf* | | | | *+60 / -65 psf* | | | |
| | | Head/Sill | C3+1 | C3+1 | C3+1 | C3+1 | C3+1 | C3+1 | C3+1 | C3+1 | C5+1 | C3+1 | C3+1 | C3+1 | C3+1 | C3+1 | C3+1 | C3+1 | C3+1 | C3+1 | C3+1 | C3+1 |
| | | Jamb | 5 | 5 | 5 | 5 | 5 | 5 | 5 | 5 | 5 | 5 | 5 | 5 | 6 | 6 | 6 | 6 | 6 | 6 | 6 | 6 |
| | | P-hook | 7 | 7 | 7 | 7 | 7 | 7 | 7 | 7 | 8 | 8 | 8 | 8 | 9 | 9 | 9 | 9 | 10 | 10 | 10 | 10 |
| 30" | 25-1/8" DLO Width | *Design Pressure* | *+100 / -100 psf* | | | | *+100 / -100 psf* | | | | *+100 / -100 psf* | | | | *+60 / -65 psf* | | | | *+60 / -65 psf* | | | |
| | | Head/Sill | C5+1 | C3+1 | C3+1 | C3+1 | C5+1 | C3+1 | C3+1 | C3+1 | C5+1 | C3+1 | C5+1 | C3+1 | C3+1 | C3+1 | C3+1 | C3+1 | C5+1 | C3+1 | C3+1 | C3+1 |
| | | Jamb | 5 | 5 | 5 | 5 | 5 | 5 | 6 | 5 | 5 | 5 | 7 | 5 | 6 | 6 | 6 | 6 | 6 | 6 | 6 | 6 |
| | | P-hook | 7 | 7 | 7 | 7 | 7 | 7 | 7 | 7 | 8 | 8 | 8 | 8 | 9 | 9 | 9 | 9 | 10 | 10 | 10 | 10 |
| 36" | 31-1/8" DLO Width | *Design Pressure* | *+100 / -100 psf* | | | | *+100 / -100 psf* | | | | *+100 / -100 psf* | | | | *+60 / -65 psf* | | | | *+60 / -65 psf* | | | |
| | | Head/Sill | C5+2 | C3+1 | C5+1 | C3+1 | C5+2 | C3+1 | C5+1 | C3+1 | C5+2 | C5+1 | C5+1 | C3+1 | C5+1 | C3+1 | C3+1 | C3+1 | C5+1 | C3+1 | C5+1 | C3+1 |
| | | Jamb | 5 | 5 | 6 | 5 | 5 | 5 | 6 | 5 | 5 | 5 | 7 | 5 | 6 | 6 | 6 | 6 | 6 | 6 | 6 | 6 |
| | | P-hook | 7 | 7 | 7 | 7 | 7 | 7 | 7 | 7 | 8 | 8 | 8 | 8 | 9 | 9 | 9 | 9 | 10 | 10 | 10 | 10 |
| 42" | 37-1/8" DLO Width | *Design Pressure* | *+100 / -100 psf* | | | | *+100 / -100 psf* | | | | *+100 / -100 psf* | | | | *+60 / -65 psf* | | | | *+60 / -65 psf* | | | |
| | | Head/Sill | C5+2 | C3+2 | C5+2 | C3+1 | C5+2 | C5+2 | C5+2 | C3+1 | C5+2 | C5+2 | C5+2 | C3+1 | C5+1 | C3+1 | C5+1 | C3+1 | C5+1 | C5+1 | C5+1 | C3+1 |
| | | Jamb | 5 | 5 | 7 | 5 | 5 | 5 | 7 | 5 | 5 | 5 | 8 | 5 | 6 | 6 | 6 | 6 | 6 | 6 | 7 | 6 |
| | | P-hook | 7 | 7 | 7 | 7 | 7 | 7 | 7 | 7 | 8 | 8 | 8 | 8 | 9 | 9 | 9 | 9 | 10 | 10 | 10 | 10 |
| 48" | 43-1/8" DLO Width | *Design Pressure* | *+100 / -100 psf* | | | | *+100 / -100 psf* | | | | *+92 / -92 psf ** | | | | *+60 / -65 psf* | | | | *+60 / -65 psf* | | | |
| | | Head/Sill | C5+2 | C5+2 | C5+2 | C3+2 | C5+2 | C5+2 | C5+2 | C3+2 | C5+2 | C5+2 | C5+2 | C5+2 | C5+2 | C3+1 | C5+2 | C3+1 | C5+2 | C5+1 | C5+2 | C3+1 |
| | | Jamb | 5 | 5 | 7 | 5 | 5 | 5 | 8 | 5 | 5 | 5 | 9 | 5 | 6 | 6 | 7 | 6 | 6 | 6 | 8 | 6 |
| | | P-hook | 7 | 7 | 7 | 7 | 7 | 7 | 8 | 8 | 8 | 8 | 9 | 9 | 9 | 9 | 9 | 9 | 10 | 10 | 10 | 10 |
| 54" | 49-1/8" DLO Width | *Design Pressure* | *+80 / -80 psf* | | | | *+80 / -80 psf* | | | | *+80 / -80 psf* | | | | *+60 / 65 psf* | | | | *+54.1 / -58.7 psf* | | | |
| | | Head/Sill | C5+2 | C3+2 | C5+2 | C3+2 | C5+2 | C3+2 | C5+2 | C3+2 | C5+2 | C5+2 | C5+2 | C3+2 | C5+2 | C5+2 | C5+2 | C5+2 | C5+2 | C5+2 | C5+2 | C5+2 |
| | | Jamb | 5 | 5 | 6 | 5 | 5 | 5 | 7 | 5 | 5 | 5 | 8 | 5 | 6 | 6 | 8 | 6 | 6 | 6 | 8 | 6 |
| | | P-hook | 7 | 7 | 7 | 7 | 7 | 7 | 7 | 7 | 8 | 8 | 8 | 8 | 9 | 9 | 9 | 9 | 10 | 10 | 10 | 10 |
| 60" | 55-1/8" DLO Width | *Design Pressure* | *+80 / -80 psf* | | | | *+80 / -80 psf* | | | | *+80 / -80 psf* | | | | *+59.1 / -64 psf* | | | | *+49.6 / -53.7 psf* | | | |
| | | Head/Sill | C5+3 | C3+2 | C5+3 | C3+2 | C5+3 | C3+2 | C5+3 | C3+2 | C5+3 | C5+2 | C5+3 | C3+2 | C5+2 | C5+2 | C5+2 | C5+2 | C5+2 | C5+2 | C5+2 | C5+2 |
| | | Jamb | 5 | 5 | 6 | 5 | 5 | 5 | 7 | 5 | 5 | 5 | 8 | 5 | 6 | 6 | 8 | 6 | 6 | 6 | 8 | 6 |
| | | P-hook | 7 | 7 | 7 | 7 | 7 | 7 | 7 | 7 | 8 | 8 | 8 | 8 | 9 | 9 | 9 | 9 | 10 | 10 | 10 | 10 |

* +/-100.0 PSF FOR ANCHOR GROUPS B, C & D.

ANCHORAGE TYPE PER SUBSTRATE REQUIRED TO ACHIEVE THE DESIGN PRESSURE, USING THE ANCHOR QUANTIES LISTED BELOW. SEE TABLE A, SHEET 1 FOR COMPLETE ANCHOR LIMITATIONS.

THE MAXIMUM DP AT THESE ANCHOR QUANTITIES. ADDITIONALLY, THE MAXIMUM POSITIVE DP DUE TO THE SILL HEIGHT MUST ALSO BE CONSIDERED, SEE TABLE B2, THIS SHEET.

# OF ANCHORS THROUGH THE HEAD & SILL. (EX: FOR C3+1, 3 ANCHORS CLUSTERED AT PANEL MEETING POINT AND 1 ANCHOR REQUIRED AT MIDSPAN OF PANEL).

TOTAL # OF ANCHORS THROUGH THE JAMB.

THE # OF ANCHORS REQUIRED THROUGH THE P-HOOK, PERPENDICULAR TO THE GLASS.

FIG 1:

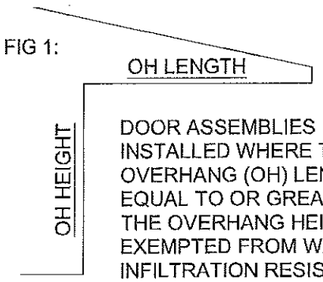


DOOR ASSEMBLIES INSTALLED WHERE THE OVERHANG (OH) LENGTH IS EQUAL TO OR GREATER THAN THE OVERHANG HEIGHT IS EXEMPTED FROM WATER INFILTRATION RESISTANCE.

TABLE B2:

| Water-Limited (+) Design Pressure | | |
|---|---|---|
| Sill Riser | Nom. Sill Height | Max. (+) DP Allowed |
| None | 1-11/16" | See Note 2 |
| 42 | 2-1/2" | +38.7 psf |
| 43 | 3-1/2" | +60.0 psf |
| 44 | 4-1/16" | +80.0 psf |
| 45 | 4-5/8" | +100.0 psf |

**PRODUCT REVISED**
as complying with the Florida Building Code
NOA-No. 17-0420.06
Expiration Date 04/14/2021
By
Miami-Dade Product Control

DLO WIDTH = NOM. PANEL WIDTH - 8-9/16"
DLO HEIGHT = DOOR HEIGHT - 11-1/16"
PANEL HEIGHT = DOOR HEIGHT - 2-1/2"

TABLE NOTES:

1) IF WATER INFILTRATION RESISTANCE IS REQUIRED,THE LESSER VALUES OF EITHER TABLE 2 AND TABLE B2 DETERMINES THE WATER LIMITED (+) DP.
2) IF WATER INFILTRATION RESISTANCE IS NOT REQUIRED OR OVERHANG IS PER FIG 1, A SILL RISER IS NOT REQUIRED. IF SO, +DP'S SHOWN IN TABLE 2 MAY BE USED.
3) SEE SILL RISER TYPES ON SHEET 4.
4) SHEET APPLIES TO 2, 3 AND 4 TRACK CONFIGURATIONS.
5) REFER TO ANCHOR NOTES, SHEET 1.
6) SEE SHEETS 11-16 FOR ANCHOR LOCATION & SPACING


1070 TECHNOLOGY DR
N. VENICE, FL 34275
(941)-480-1600
CERT. OF AUTH. #29296

| | | | | | |
|---|---|---|---|---|---|
| Title | VINYL SLIDING GLASS DOOR NOA (LM) | | | Date | 10/05/15 |
| Desc. | DP & ANCHOR QUANTITY TABLE | | Drawn By | J ROSOWSKI | |
| Rev | NO CHANGES THIS SHEET. | | | Rev Date | 04/05/17 |
| Rev | | | | Rev Date | |
| Series | SGD-5570 | Scale NTS | Sheet 8 OF 21 | DWG No. MD-5570.0 | Rev. No. A |

ANTHONY LYNN MILLER
LICENSE
No. 58705
4/18/17
STATE OF FLORIDA
PROFESSIONAL ENGINEER

A. LYNN MILLER, P.E.
P.E.# 58705

## EXAMPLE:

3-PANEL, 3 TRACK, STRAIGHT CONFIGURATION - PXXX,
INTERIOR MOUNT POCKET, 48" X 84" NOM. PANELS,
LAMINATED, IG GLAZING, ANCHOR GROUP A IN WOOD SUBSTRATE,
PROJECT DESIGN PRESSURE REQUIRED: +48.2/-58.6 PSF

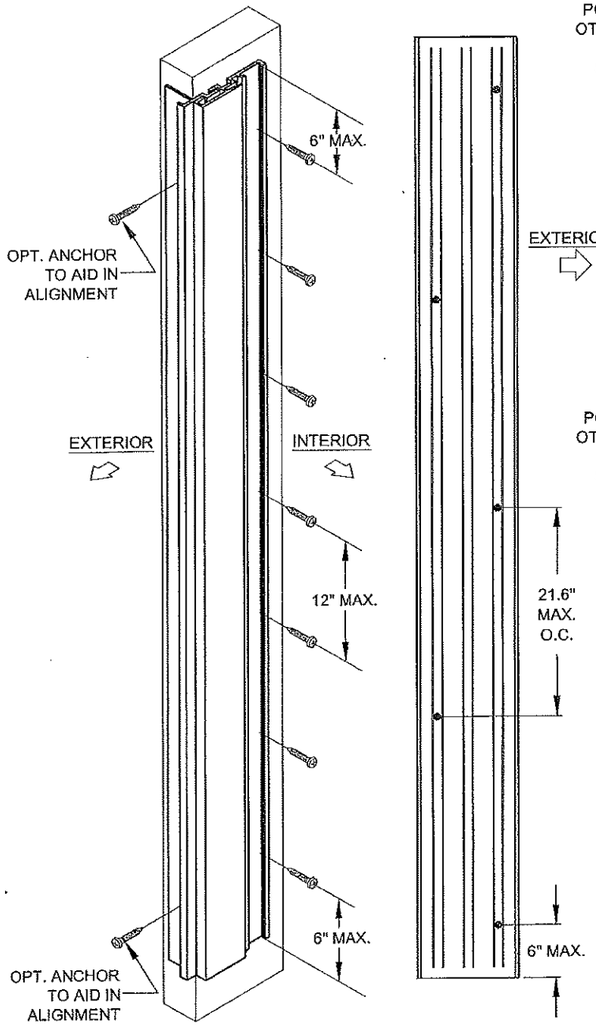


P-HOOK ANCHORAGE DETAILS

JAMB ANCHORAGE DETAILS

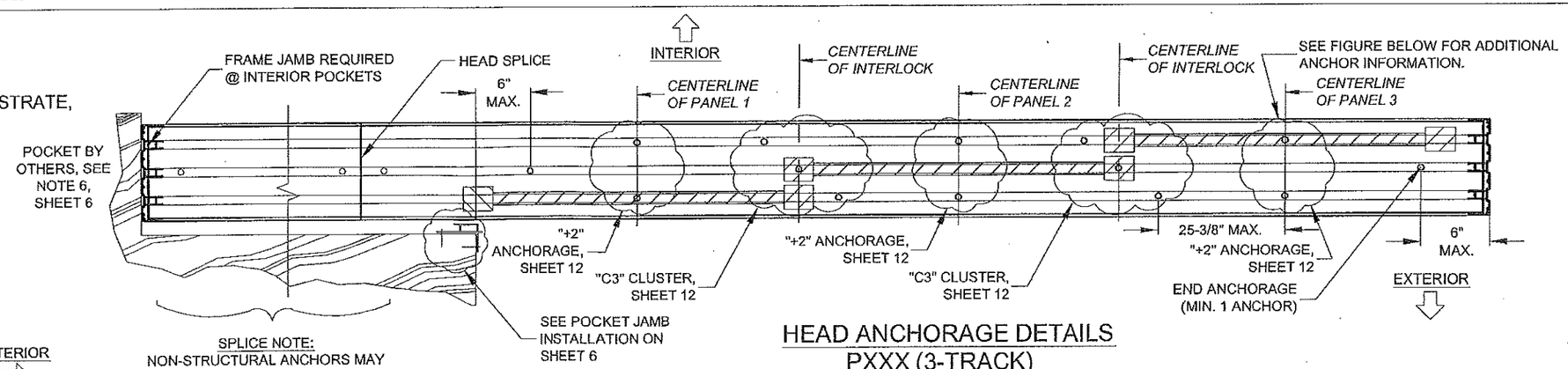


SPLICE NOTE:
NON-STRUCTURAL ANCHORS MAY BE ADDED IN-FIELD AS NEEDED TO ALIGN THE HEAD OR SILL IF A SPLICE OCCURS WITHIN A POCKET.

HEAD ANCHORAGE DETAILS
PXXX (3-TRACK)

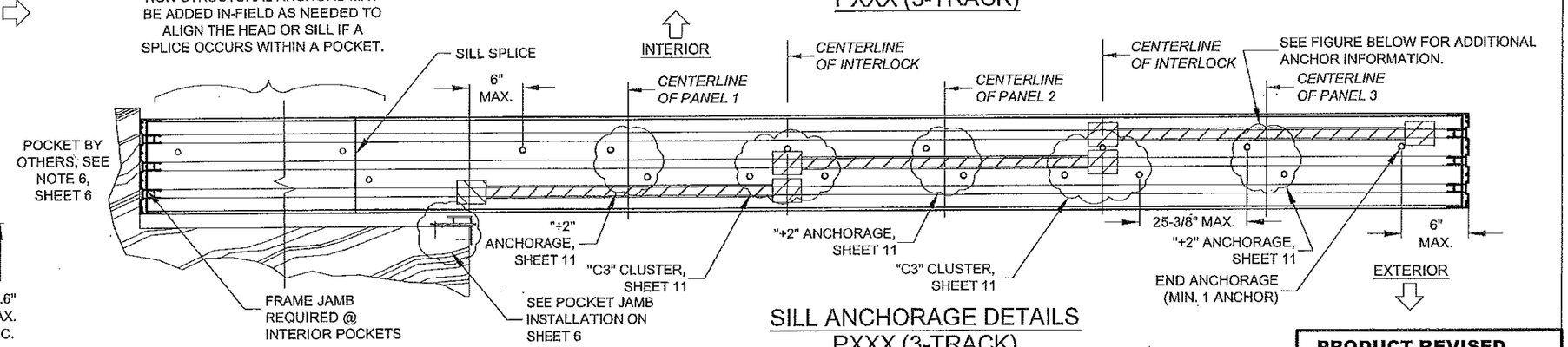


SILL ANCHORAGE DETAILS
PXXX (3-TRACK)

1) KNOWING THE PRODUCT'S REQUIREMENTS, SCAN THROUGH TABLES 1 & 2 FOR A DESIGN PRESSURE THAT MEETS OR EXCEEDS THE REQUIREMENT OF +48.2/-58.6 AT A NOM. PANEL SIZE OF 48" X 84". FROM TABLE 1, SHEET 7, THE DESIGN PRESSURE IS +60/-60 WHICH EXCEEDS THE PROJECT DESIGN PRESSURE REQUIREMENTS.

FOR WOOD INSTALLATION USING ANY ANCHOR IN GROUP A (SEE TABLE A), TABLE 1 SHOWS ANCHOR REQUIREMENTS OF:

| | |
|---|---|
| Head/Sill | C3+2 |
| Jamb | 5 |
| P-hook | 7 |

2) ANCHOR LOCATION DETAILS, CAN BE FOUND ON:
HEAD (CLUSTER ANCHORS): SHEET 12 FOR THE "C3" CLUSTER ANCHORS AT THE INTERLOCK/ASTRAGAL.
HEAD (INTERMEDIATE ANCHORS): SHEET 12 FOR THE "+2 ANCHORS AT THE MIDSPAN OF EACH PANEL.
SILL (CLUSTER ANCHORS): SHEET 11 FOR THE "C3" CLUSTER ANCHORS AT THE INTERLOCK/ASTRAGAL.
SILL (INTERMEDIATE ANCHORS): SHEET 11 FOR THE "+2 ANCHORS AT THE MIDSPAN OF EACH PANEL.
JAMB: 5 ANCHORS, SHEET 13 FOR GEN. LAYOUT.
P-HOOK: 7 ANCHORS, SHEET 13 FOR GENERAL LAYOUT.

3) INSTALLATION DETAILS INTO WOOD CAN BE FOUND ON:
HEAD & SILL: SHEET 4
JAMB: SHEET 3
P-HOOK: SHEET 6

END PANEL ANCHOR EXCEPTION:

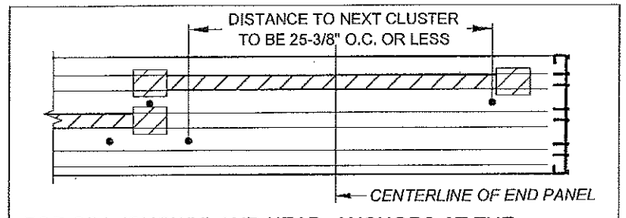


FOR SILL (SHOWN) AND HEAD, ANCHORS AT THE MIDPOINT OF END PANELS ARE ONLY REQUIRED IF THE O.C. DISTANCE TO THE NEXT ANCHOR CLUSTER IS OVER 25-3/8", OTHERWISE ANCHORS ARE NOT REQUIRED AS PER THE FIGURE ABOVE:

FOR PRODUCT REFERENCES, ALSO SEE:
A) SHEET 2 FOR ALLOWABLE CONFIGURATIONS AND EXACT LOCATIONS OF CROSS-SECTION DRAWINGS.
B) SHEET 10 FOR SPECIFIC GLAZING TYPES.
C) SHEET 17 FOR ALLOWABLE PANEL TYPES AND CALL NAMES.
D) SHEETS 4 & 18 FOR EXTRUSION CROSS-SECTION DRAWINGS.
E) SHEET 19 FOR INSTALLATION OF ADDITIONAL ACCESSORIES.
F) SHEET 21 FOR A BILL OF MATERIALS.


1070 TECHNOLOGY DR
N. VENICE, FL 34275
(941)-480-1600
CERT. OF AUTH. #29296

| | | | | | |
|---|---|---|---|---|---|
| Title | VINYL SLIDING GLASS DOOR NOA (LM) | | | Date | 10/05/15 |
| Desc. | STRAIGHT DOOR EXAMPLE | | Drawn By | J ROSOWSKI | |
| Rev | NO CHANGES THIS SHEET. | | | Rev Date | 04/05/17 |
| Rev | | | | Rev Date | |
| Series | SGD-5570 | Scale NTS | Sheet 9 OF 21 | DWG No. MD-5570.0 | Rev. No. A |

**PRODUCT REVISED**
as complying with the Florida Building Code
NOA-No. 17-0420.06
Expiration Date 04/14/2021
By
Miami-Dade Product Control

ANTHONY LYNN MILLER
LICENSE
No. 58705
STATE OF FLORIDA
PROFESSIONAL ENGINEER
A. LYNN MILLER, P.E.
P.E.# 58705

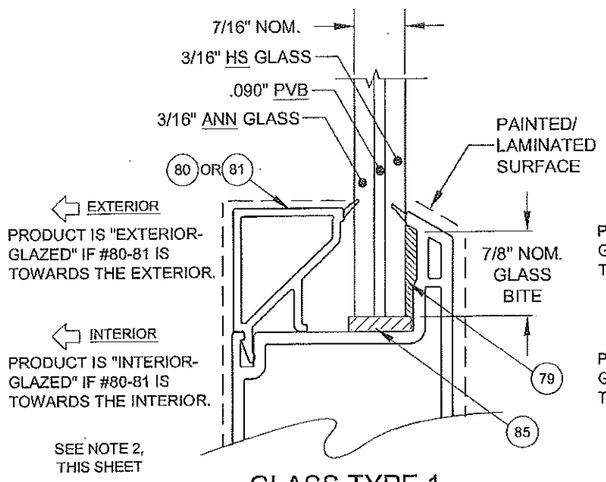


GLASS TYPE 1

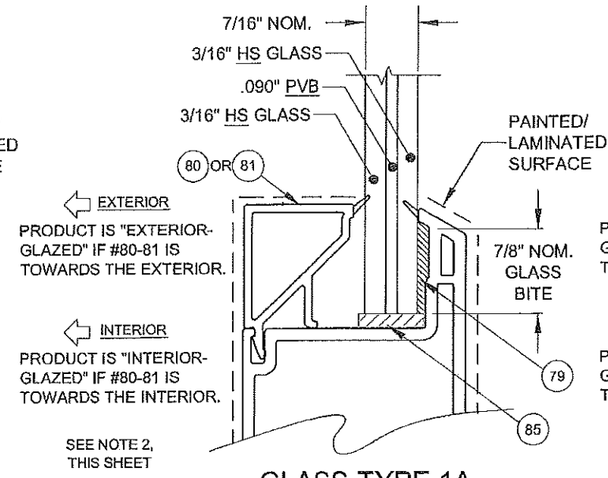


GLASS TYPE 1A

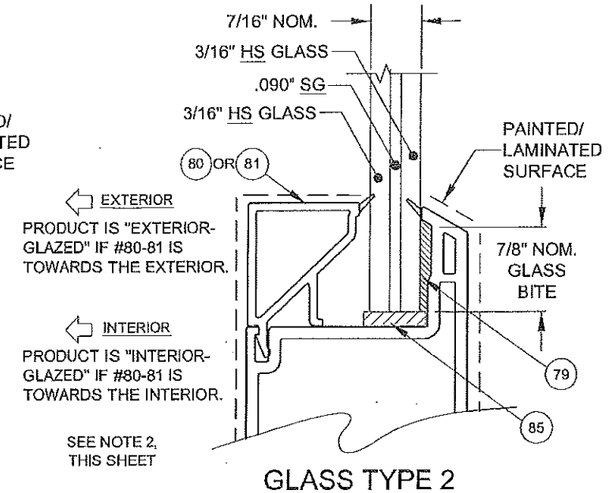


GLASS TYPE 2

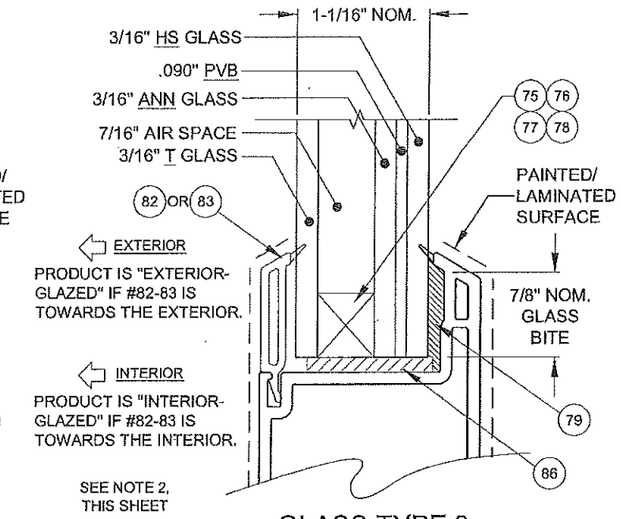


GLASS TYPE 3

"ANN" = ANNEALED
"HS" = HEAT STRENGTHENED
"T" = TEMPERED
"PVB" = .090" TROSIFOL® PVB INTERLAYER BY KURARAY AMERICA, INC.
"SG" = .090" SENTRYGLAS® INTERLAYER BY KURARAY AMERICA, INC.

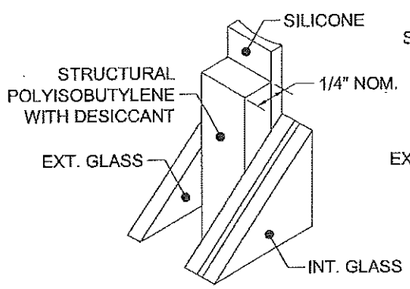


(75) KODISPACE 4SG TPS

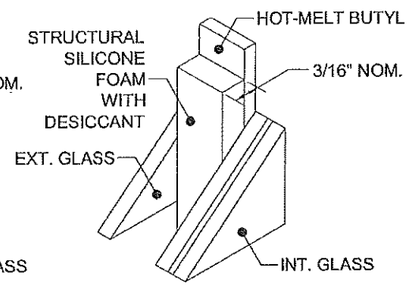


(76) SUPER SPACER® NXT™

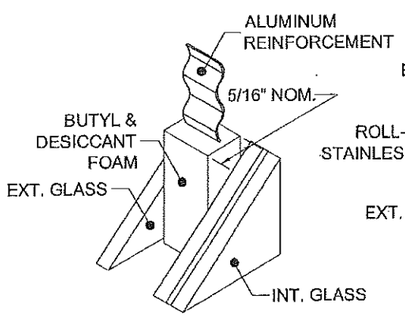


(77) DURASEAL® SPACER

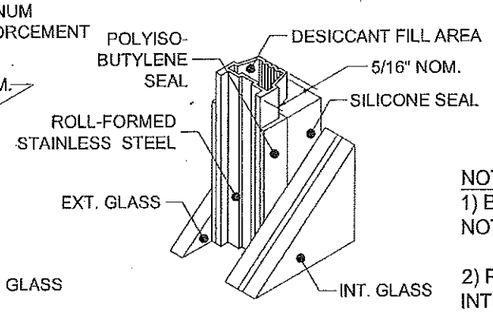


(78) XL EDGE™ SPACER

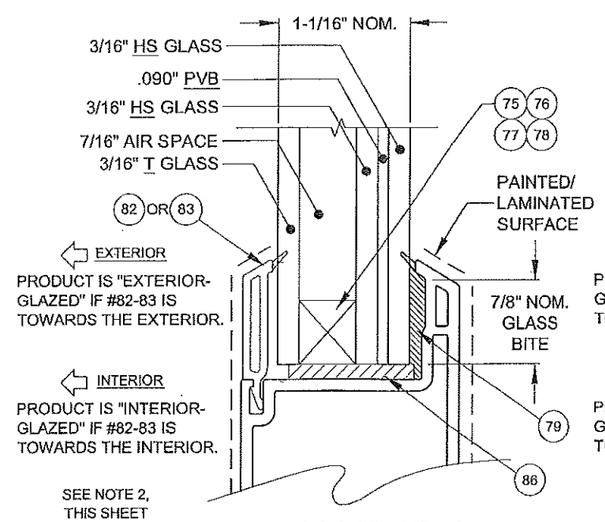


GLASS TYPE 3A

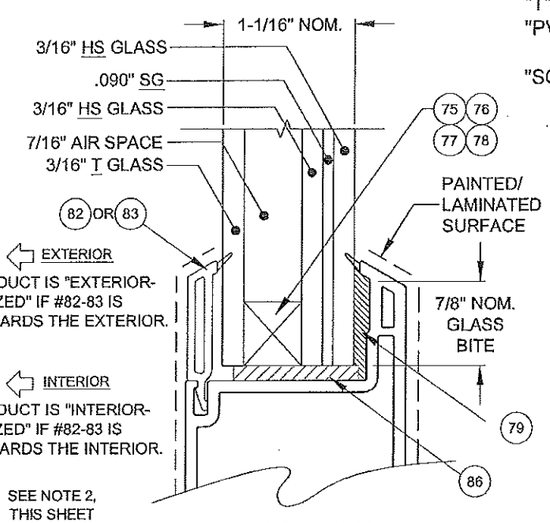


GLASS TYPE 4

NOTES:
1) BACKBEDDING SURFACES SHALL NOT BE PAINTED OR LAMINATED.

2) PRODUCT MAY BE EITHER INTERIOR OR EXTERIOR GLAZED, PROVIDED THAT THE "HS" SURFACE OF A LAMINATED GLAZING UNIT IS ADHERED TO THE GLAZING LEG.

**PRODUCT REVISED**
as complying with the Florida Building Code
NOA-No. 17-0420.06
Expiration Date 04/14/2021
By
Miami-Dade Product Control


1070 TECHNOLOGY DR
N. VENICE, FL 34275
(941)-480-1600
CERT. OF AUTH. #29296

| | | | | | |
|---|---|---|---|---|---|
| Title | VINYL SLIDING GLASS DOOR NOA (LM) | | | Date | 10/05/15 |
| Desc. | GLAZING DETAILS | | Drawn By | J ROSOWSKI | |
| Rev | NO CHANGES THIS SHEET. | | Rev Date | 04/05/17 | |
| Rev | | | Rev Date | | |
| Series | SGD-5570 | Scale NTS | Sheet 10 OF 21 | DWG No. MD-5570.0 | Rev. No. A |

ANTHONY LYNN MILLER
LICENSE
No. 58705
STATE OF FLORIDA
PROFESSIONAL ENGINEER
A. LYNN MILLER, P.E.
P.E.# 58705

## SILL CLUSTER ANCHORS LAYOUT:

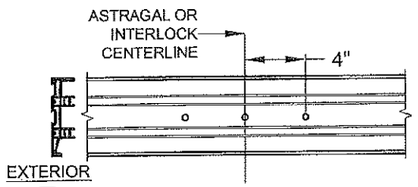


2-TRACK CLUSTER "C3"
ANCHOR LOCATIONS

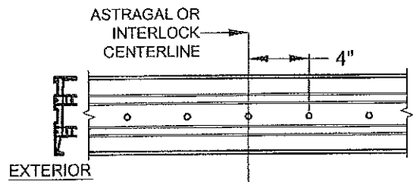


2-TRACK CLUSTER "C5"
ANCHOR LOCATIONS

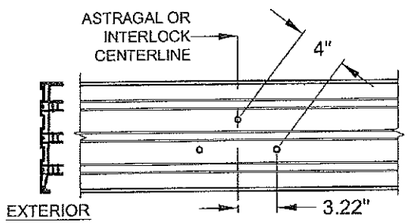


3-TRACK CLUSTER "C3"
ANCHOR LOCATIONS

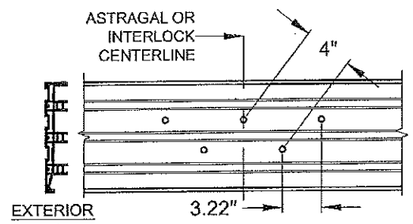


3-TRACK CLUSTER "C5"
ANCHOR LOCATIONS

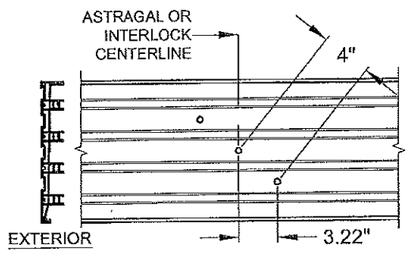


4-TRACK CLUSTER
"C3" ANCHOR LOCATIONS

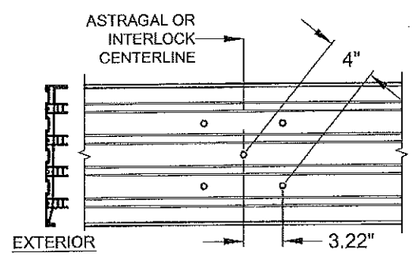


4-TRACK CLUSTER
"C5" ANCHOR LOCATIONS

NOTES:
1) ALL DIMENSIONS SHOWN ARE BASED ON MINIMUM ALLOWED.

2) TRACK-TO-TRACK DISTANCE IS 2.375" FOR ALL SILLS:

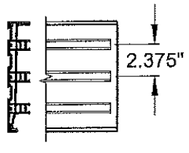


FIGURES PERTAIN TO THE FOLLOWING SILL CLUSTER ANCHOR LOCATIONS:

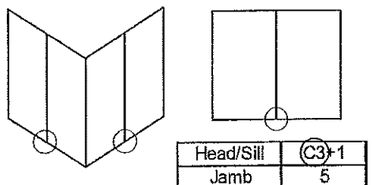

| Head/Sill | C3+1 |
|---|---|
| Jamb | 5 |
| P-hook | 7 |

## SILL "+" INTERMEDIATE ANCHORS LAYOUT:

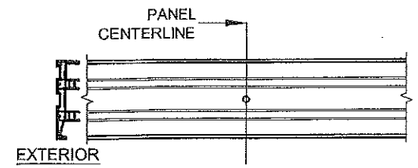


2-TRACK INTERMEDIATE
"+1" ANCHOR LOCATION

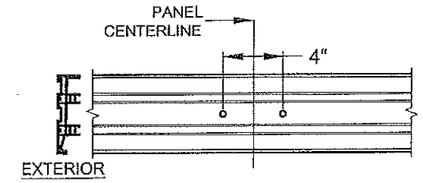


2-TRACK INTERMEDIATE
"+2" ANCHOR LOCATIONS

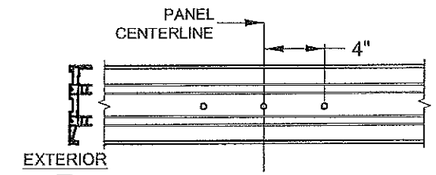


2-TRACK INTERMEDIATE
"+3" ANCHOR LOCATIONS

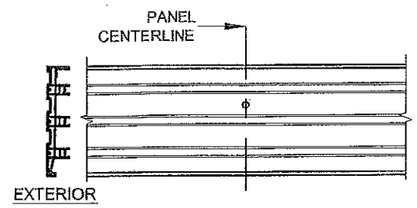


3-TRACK INTERMEDIATE
"+1" ANCHOR LOCATION

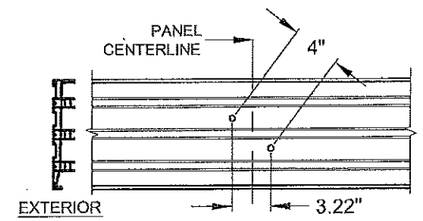


3-TRACK INTERMEDIATE
"+2" ANCHOR LOCATIONS

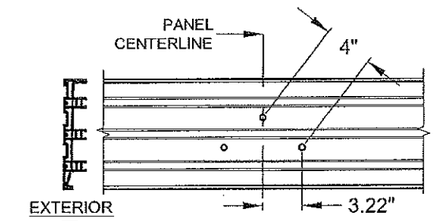


3-TRACK INTERMEDIATE
"+3" ANCHOR LOCATIONS

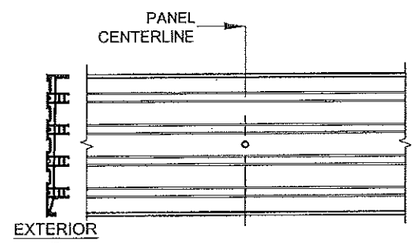


4-TRACK INTERMEDIATE
"+1" ANCHOR LOCATION

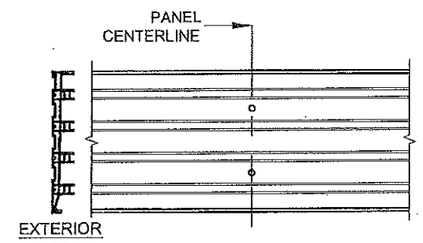


4-TRACK INTERMEDIATE
"+2" ANCHOR LOCATIONS

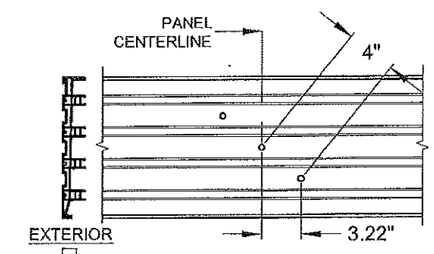


4-TRACK INTERMEDIATE
"+3" ANCHOR LOCATIONS

NOTES:
1) ALL DIMENSIONS SHOWN ARE BASED ON MINIMUM ALLOWED.

2) TRACK-TO-TRACK DISTANCE IS 2.375" FOR ALL SILLS:

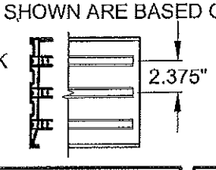


FIGURES PERTAIN TO THE FOLLOWING SILL INTERMEDIATE ANCHOR LOCATIONS:

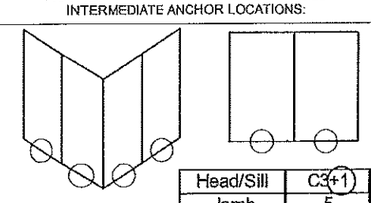

| Head/Sill | C3+1 |
|---|---|
| Jamb | 5 |
| P-hook | 7 |

**PRODUCT REVISED**
**as complying with the Florida Building Code**
**NOA-No. 17-0420.06**
**Expiration Date 04/14/2021**
**By**
**Miami-Dade Product Control**

ANTHONY LYNN MILLER
LICENSE
No. 58705
STATE OF FLORIDA
PROFESSIONAL ENGINEER
A. LYNN MILLER, P.E.
P.E.# 58705


1070 TECHNOLOGY DR
N. VENICE, FL 34275
(941)-480-1600
CERT. OF AUTH. #29296

| | | | | | |
|---|---|---|---|---|---|
| Title | VINYL SLIDING GLASS DOOR NOA (LM) | | | Date | 10/05/15 |
| Desc. | ANCHOR LOCATIONS A | | Drawn By | J ROSOWSKI | |
| Rev | NO CHANGES THIS SHEET: | | | Rev Date | 04/05/17 |
| Rev | | | | Rev Date | |
| Series | SGD-5570 | Scale NTS | Sheet 11 OF 21 | DWG No. MD-5570.0 | Rev. No. A |

## HEAD CLUSTER ANCHORS LAYOUT:

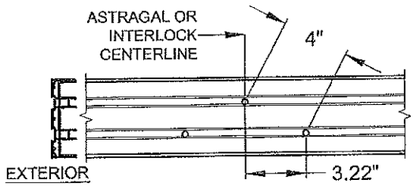


2-TRACK CLUSTER "C3"
ANCHOR LOCATIONS

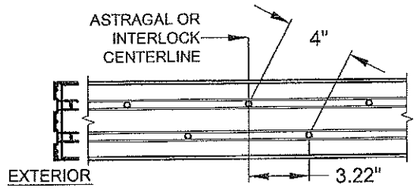


2-TRACK CLUSTER "C5"
ANCHOR LOCATIONS

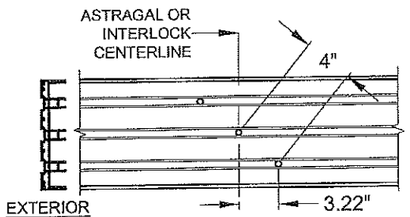


3-TRACK CLUSTER "C3"
ANCHOR LOCATIONS

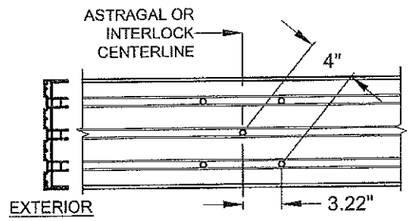


3-TRACK CLUSTER "C5"
ANCHOR LOCATIONS

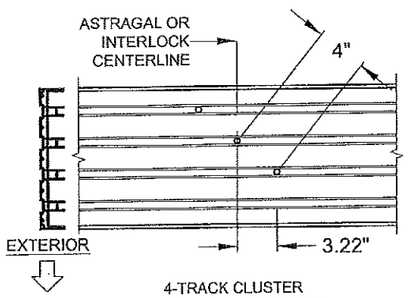


4-TRACK CLUSTER
"C3"ANCHOR LOCATIONS

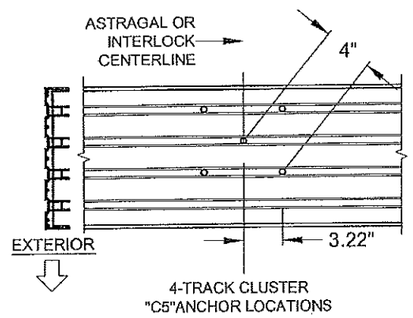


4-TRACK CLUSTER
"C5"ANCHOR LOCATIONS

NOTES:
1) ALL DIMENSIONS SHOWN ARE BASED ON MINIMUM ALLOWED.

2) TRACK-TO-TRACK
DISTANCE IS 2.375"
FOR ALL HEADS:

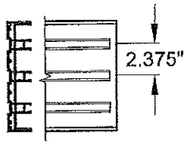


FIGURES PERTAIN TO THE FOLLOWING HEAD
CLUSTER ANCHOR LOCATIONS:

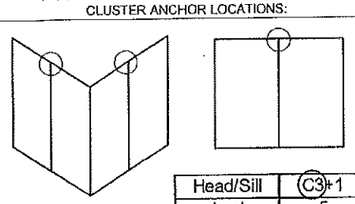

| Head/Sill | C3+1 |
|---|---|
| Jamb | 5 |
| P-hook | 7 |

## HEAD "+" INTERMEDIATE ANCHORS LAYOUT:

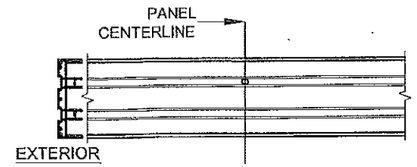


2-TRACK INTERMEDIATE
"+1" ANCHOR LOCATION

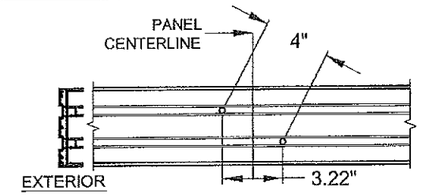


2-TRACK INTERMEDIATE
"+2" ANCHOR LOCATIONS

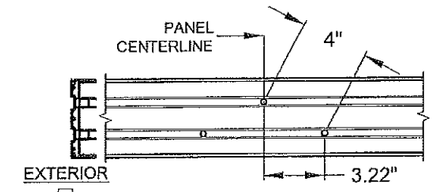


2-TRACK INTERMEDIATE
"+3" ANCHOR LOCATIONS

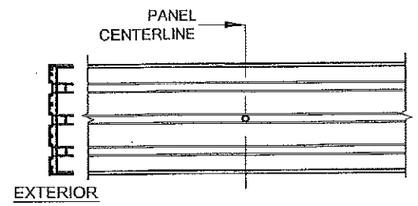


3-TRACK INTERMEDIATE
"+1" ANCHOR LOCATION

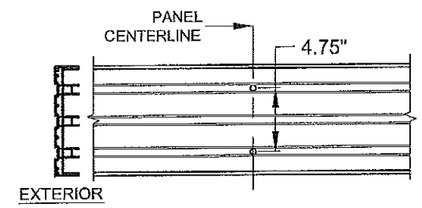


3-TRACK INTERMEDIATE
"+2" ANCHOR LOCATIONS

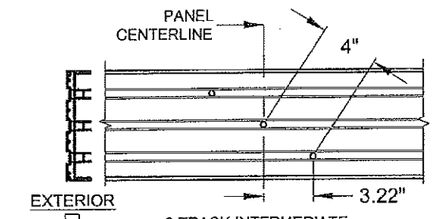


3-TRACK INTERMEDIATE
"+3" ANCHOR LOCATIONS

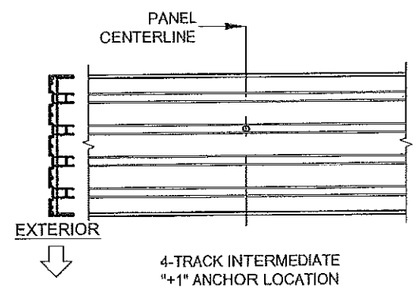


4-TRACK INTERMEDIATE
"+1" ANCHOR LOCATION

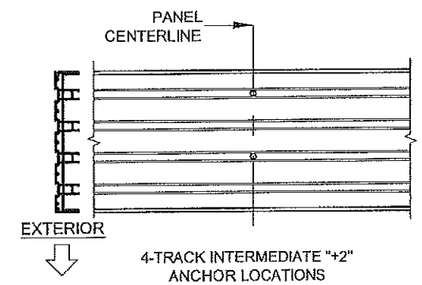


4-TRACK INTERMEDIATE "+2"
ANCHOR LOCATIONS

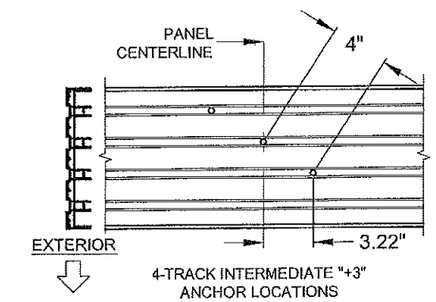


4-TRACK INTERMEDIATE "+3"
ANCHOR LOCATIONS

NOTES:
1) ALL DIMENSIONS SHOWN ARE BASED ON MINIMUM ALLOWED.

2) TRACK-TO-TRACK
DISTANCE IS 2.375"
FOR ALL HEADS:

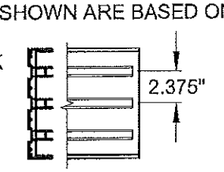


FIGURES PERTAIN TO THE FOLLOWING HEAD
INTERMEDIATE ANCHOR LOCATIONS:

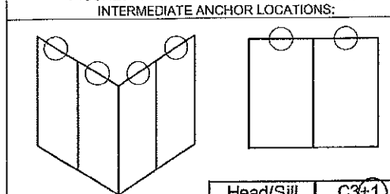

| Head/Sill | C3+1 |
|---|---|
| Jamb | 5 |
| P-hook | 7 |

**PRODUCT REVISED**
**as complying with the Florida Building Code**
**NOA-No. 17-0420.06**
**Expiration Date 04/14/2021**
**By**
**Miami-Dade Product Control**

ANTHONY LYNN MILLER
LICENSE
No. 58705
STATE OF
FLORIDA
PROFESSIONAL ENGINEER

A. LYNN MILLER, P.E.
P.E.# 58705



1070 TECHNOLOGY DR
N. VENICE, FL 34275
(941)-480-1600
CERT. OF AUTH. #29296

| | | | | | |
|---|---|---|---|---|---|
| Title | VINYL SLIDING GLASS DOOR NOA (LM) | | | Date | 10/05/15 |
| Desc. | ANCHOR LOCATIONS B | | | Drawn By | J ROSOWSKI |
| Rev | NO CHANGES THIS SHEET. | | | Rev Date | 04/05/17 |
| Rev | | | | Rev Date | |
| Series | SGD-5570 | Scale NTS | Sheet 12 OF 21 | DWG No. MD-5570.0 | Rev. No. A |

## P-HOOK ANCHORS LAYOUT:

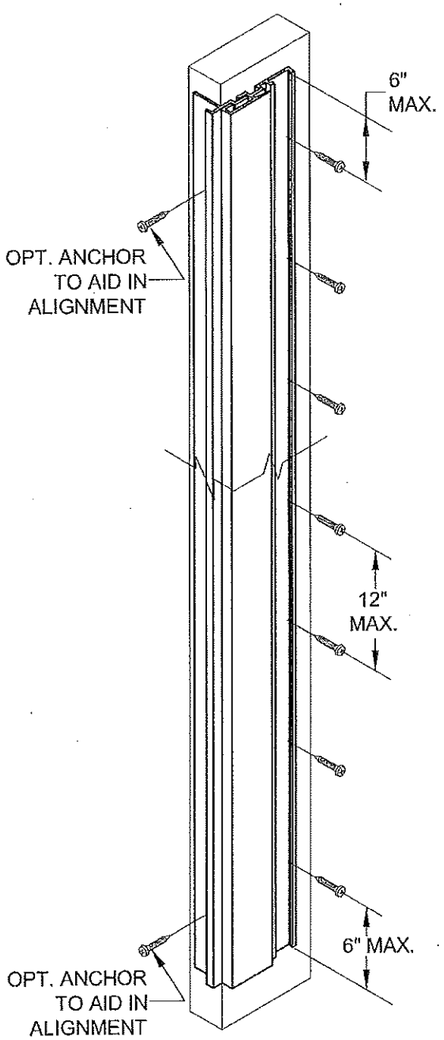


NOTES:
1) SEE TABLES 1 & 2 FOR EXACT QUANTITY OF ANCHORS REQUIRED IN THE P-HOOK.

FIGURES PERTAIN TO THE FOLLOWING POCKET JAMB (P-HOOK) ANCHOR LOCATIONS:

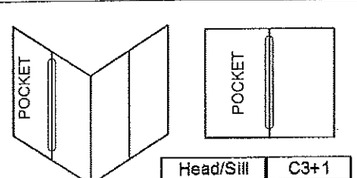


| | |
|---|---|
| Head/Sill | C3+1 |
| Jamb | 5 |
| P-hook | 7 |

## JAMB ANCHORS LAYOUT, (PARTIAL VIEW):

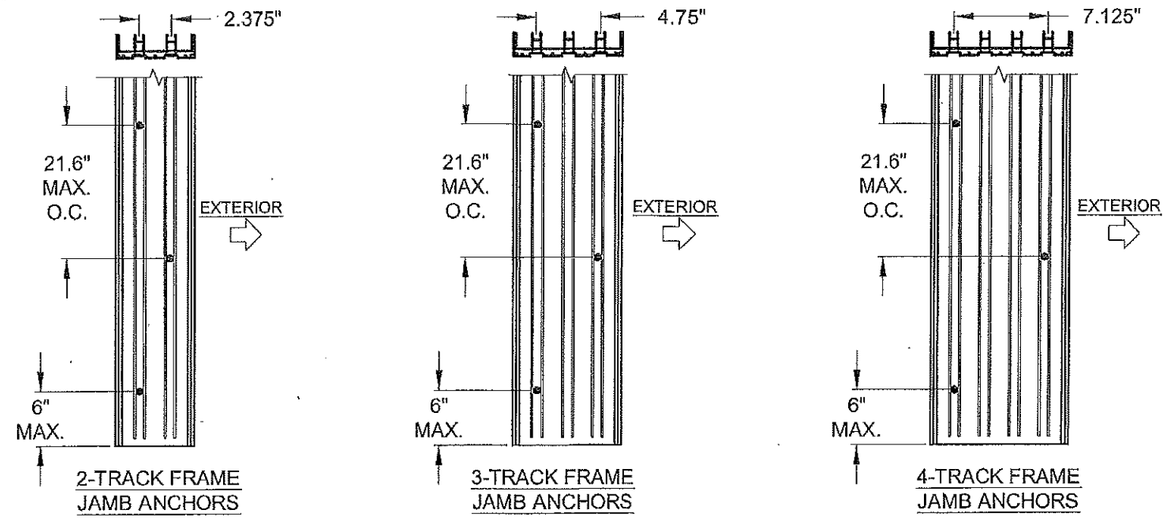


FIGURES PERTAIN TO THE FOLLOWING JAMB ANCHOR LOCATIONS:

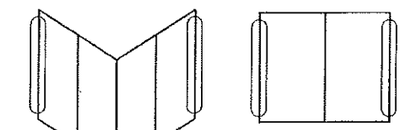

| | |
|---|---|
| Head/Sill | C3+1 |
| Jamb | 5 |
| P-hook | 7 |

NOTES:
1) STANDARD ANCHOR LOCATIONS SHOWN. FOR 3 AND 4-TRACK JAMBS, ANCHORS MAY BE LOCATED IN ANY ADJACENT TRACK (SIMILAR TO THE 2-TRACK JAMB) AS REQUIRED TO MEET MIN. EDGE DISTANCE CONSTRAINTS. IN CASE OF AN ODD NUMBER OF ANCHORS, THE MAJORITY MAY BE TOWARD THE INTERIOR OR EXTERIOR.

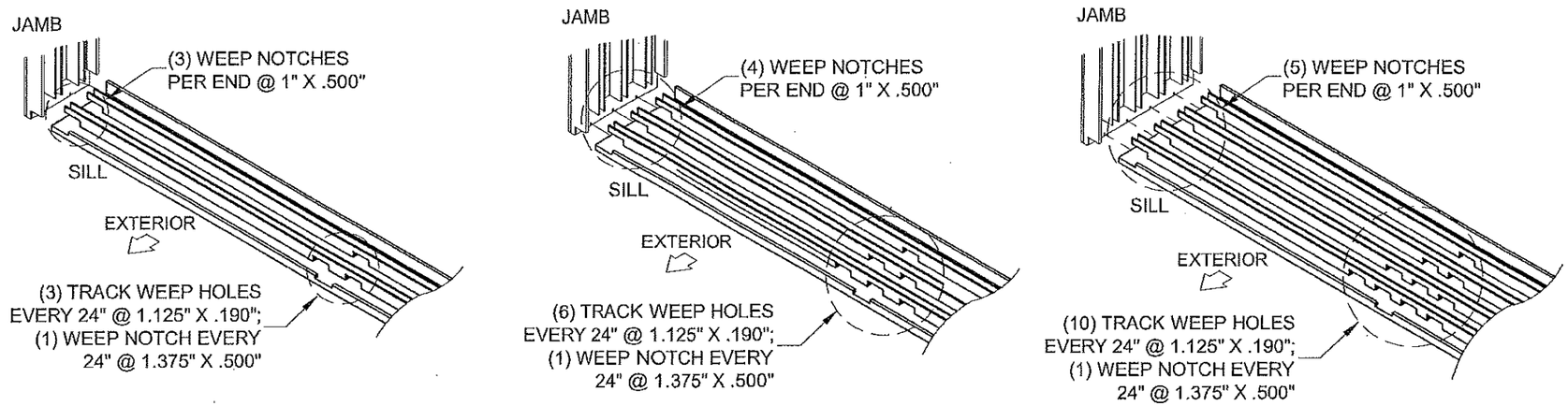


## SILL WEEPHOLE LAYOUT (2, 3 & 4 TRACKS)

**PRODUCT REVISED**
**as complying with the Florida Building Code**
**NOA-No. 17-0420.06**
**Expiration Date 04/14/2021**
**By**
**Miami-Dade Product Control**

ANTHONY LYNN MILLER
LICENSE
No. 58705
STATE OF FLORIDA
PROFESSIONAL ENGINEER

A. LYNN MILLER, P.E.
P.E.# 58705



1070 TECHNOLOGY DR
N. VENICE, FL 34275
(941)-480-1600
CERT. OF AUTH. #29296

| | | | | | |
|---|---|---|---|---|---|
| Title | VINYL SLIDING GLASS DOOR NOA (LM) | | | Date | 10/05/15 |
| Desc. | ANCHOR LOCATIONS C | | | Drawn By | J ROSOWSKI |
| Rev | NO CHANGES THIS SHEET. | | | Rev Date | 04/05/17 |
| Rev | | | | Rev Date | |
| Series | SGD-5570 | Scale NTS | Sheet 13 OF 21 | DWG No. MD-5570.0 | Rev. No. A |

## HEAD 90° CORNER CLUSTER ANCHORS LAYOUT:

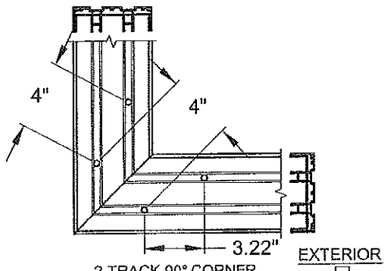


2-TRACK 90° CORNER
"C4" ANCHOR LOCATIONS
(USE WHERE "C3" IS SPECIFIED)

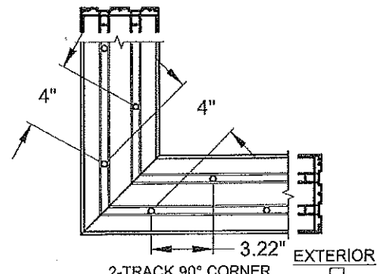


2-TRACK 90° CORNER
"C6" ANCHOR LOCATIONS
(USE WHERE "C5" IS SPECIFIED)

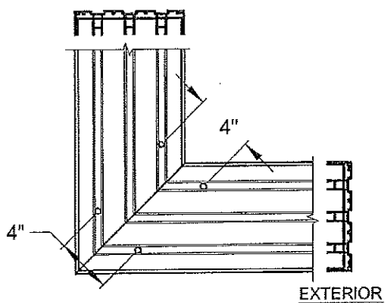


3-TRACK 90° CORNER
"C4" ANCHOR LOCATIONS
(USE WHERE "C3" IS SPECIFIED)

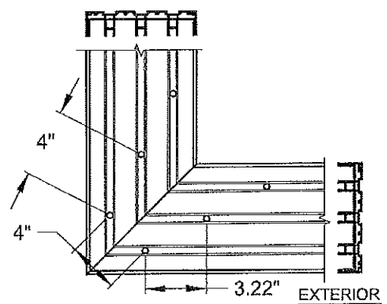


3-TRACK 90° CORNER
"C6" ANCHOR LOCATIONS
(USE WHERE "C5" IS SPECIFIED)

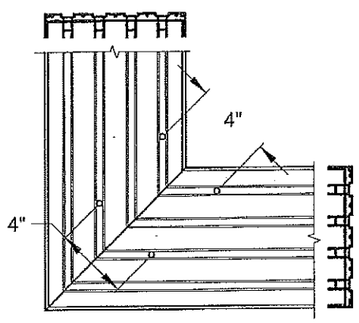


4-TRACK 90° CORNER
"C4" ANCHOR LOCATIONS
(USE WHERE "C3" IS SPECIFIED)

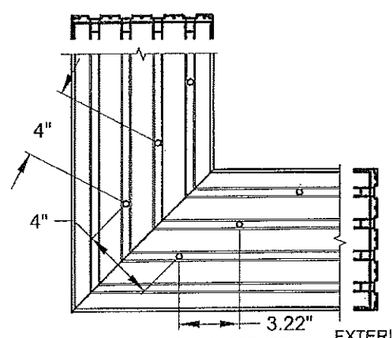


4-TRACK 90° CORNER
"C6" ANCHOR LOCATIONS
(USE WHERE "C5" IS SPECIFIED)

## SILL 90° CORNER CLUSTER ANCHORS LAYOUT:

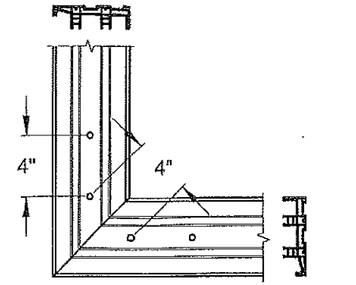


2-TRACK 90° CORNER
"C4" ANCHOR LOCATIONS
(USE WHERE "C3" IS SPECIFIED)

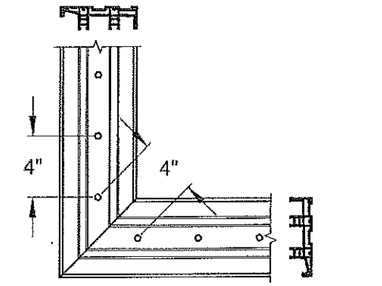


2-TRACK 90° CORNER
"C6" ANCHOR LOCATIONS
(USE WHERE "C5" IS SPECIFIED)

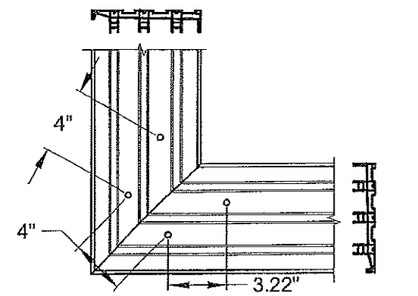


3-TRACK 90° CORNER
"C4" ANCHOR LOCATIONS
(USE WHERE "C3" IS SPECIFIED)

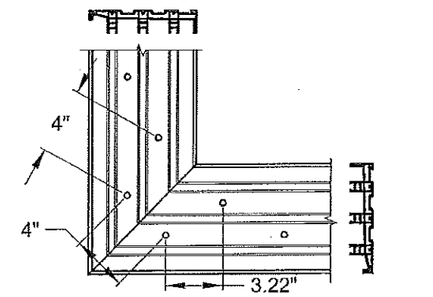


3-TRACK 90° CORNER
"C6" ANCHOR LOCATIONS
(USE WHERE "C5" IS SPECIFIED)

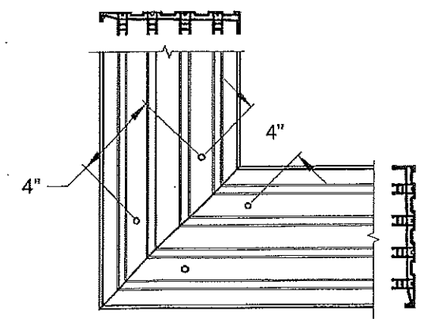


4-TRACK 90° CORNER
"C4" ANCHOR LOCATIONS
(USE WHERE "C3" IS SPECIFIED)

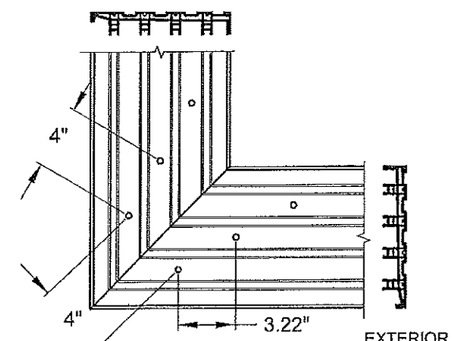


4-TRACK 90° CORNER
"C6" ANCHOR LOCATIONS
(USE WHERE "C5" IS SPECIFIED)

FIGURES PERTAIN TO THE FOLLOWING 90° CORNER SILL ANCHOR LOCATIONS:

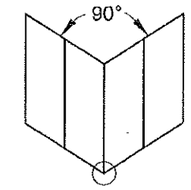


| | |
|---|---|
| Head/Sill | C3+1 |
| Jamb | 5 |
| P-hook | 7 |

**PRODUCT REVISED**
**as complying with the Florida Building Code**
**NOA-No. 17-0420.06**
**Expiration Date 04/14/2021**
**By**
**Miami-Dade Product Control**

ANTHONY LYNN MILLER
LICENSE
No. 58705
STATE OF
FLORIDA
PROFESSIONAL ENGINEER

A. LYNN MILLER, P.E.
P.E.# 58705

FIGURES PERTAIN TO THE FOLLOWING 90° CORNER HEAD ANCHOR LOCATIONS:

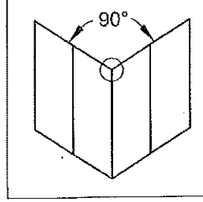


| | |
|---|---|
| Head/Sill | C3+1 |
| Jamb | 5 |
| P-hook | 7 |

NOTES:
1) ALL DIMENSIONS SHOWN ARE BASED ON MINIMUM ALLOWED.

2) DETAILS DEPICT ANCHOR QUANTITY AND SPACING, AND WOULD BE SIMILAR FOR OUTSIDE (SHOWN) AND INSIDE CORNER CONFIGURATIONS.

3) TRACK-TO-TRACK DISTANCE IS 2.375" FOR ALL HEADS AND SILLS:

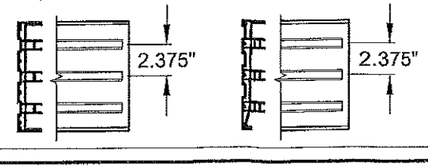



1070 TECHNOLOGY DR
N. VENICE, FL 34275
(941)-480-1600
CERT. OF AUTH. #29296

| | | | | | |
|---|---|---|---|---|---|
| Title | VINYL SLIDING GLASS DOOR NOA (LM) | | | Date | 10/05/15 |
| Desc. | ANCHOR LOCATIONS D | | | Drawn By | J ROSOWSKI |
| Rev | NO CHANGES THIS SHEET. | | | Rev Date | 04/05/17 |
| Rev | | | | Rev Date | |
| Series | SGD-5570 | Scale NTS | Sheet 14 OF 21 | DWG No. MD-5570.0 | Rev. No. A |

## HEAD 135° CORNER CLUSTER ANCHORS LAYOUT:

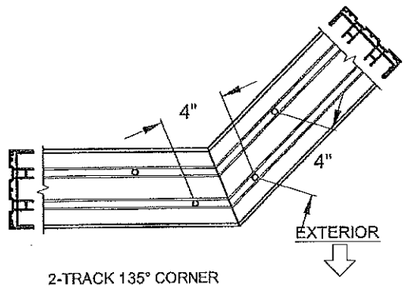


2-TRACK 135° CORNER
"C4" ANCHOR LOCATIONS
(USE WHERE "C3" IS SPECIFIED)

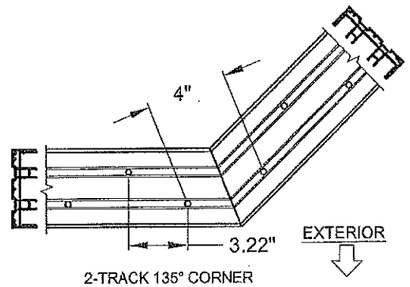


2-TRACK 135° CORNER
"C6" ANCHOR LOCATIONS
(USE WHERE "C5" IS SPECIFIED)

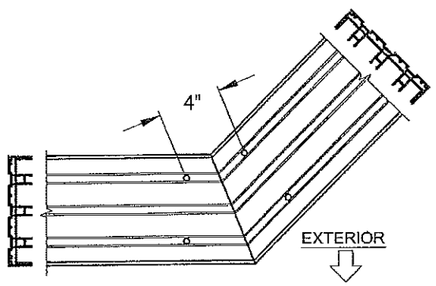


3-TRACK 135° CORNER
"C4" ANCHOR LOCATIONS
(USE WHERE "C3" IS SPECIFIED)

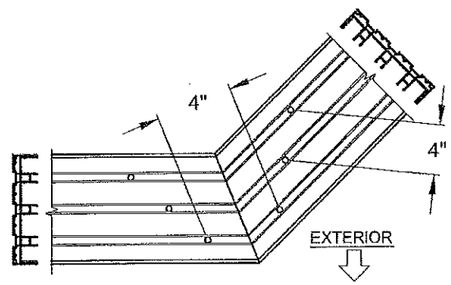


3-TRACK 135° CORNER
"C6" ANCHOR LOCATIONS
(USE WHERE "C5" IS SPECIFIED)

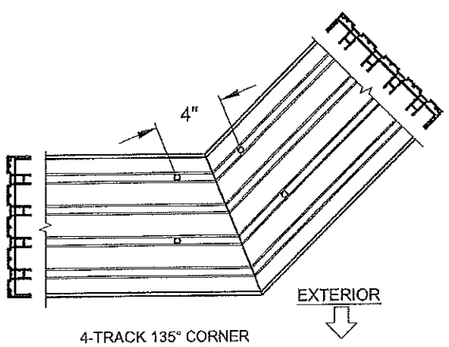


4-TRACK 135° CORNER
"C4" ANCHOR LOCATIONS
(USE WHERE "C3" IS SPECIFIED)

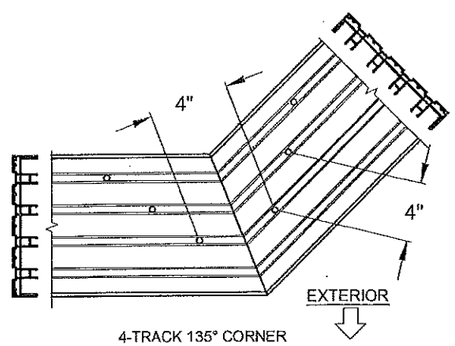


4-TRACK 135° CORNER
"C6" ANCHOR LOCATIONS
(USE WHERE "C5" IS SPECIFIED)

## SILL 135° CORNER CLUSTER ANCHORS LAYOUT:

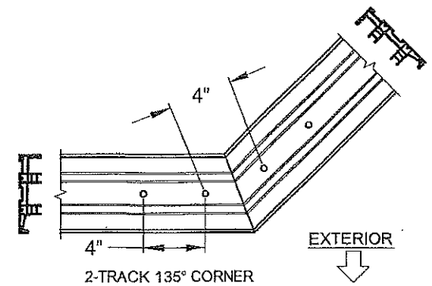


2-TRACK 135° CORNER
"C4" ANCHOR LOCATIONS
(USE WHERE "C3" IS SPECIFIED)

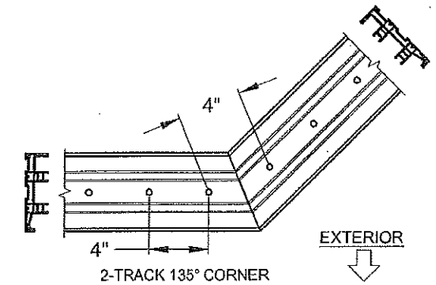


2-TRACK 135° CORNER
"C6" ANCHOR LOCATIONS
(USE WHERE "C5" IS SPECIFIED)

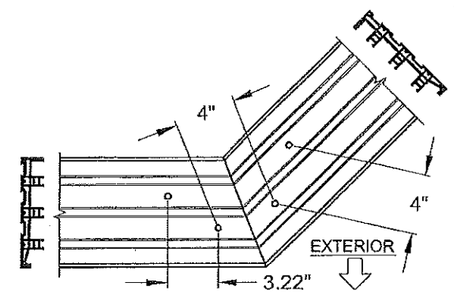


3-TRACK 135° CORNER
"C4" ANCHOR LOCATIONS
(USE WHERE "C3" IS SPECIFIED)

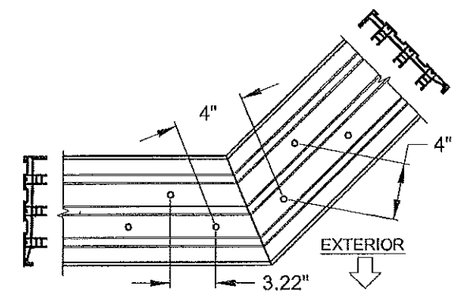


3-TRACK 135° CORNER
"C6" ANCHOR LOCATIONS
(USE WHERE "C5" IS SPECIFIED)

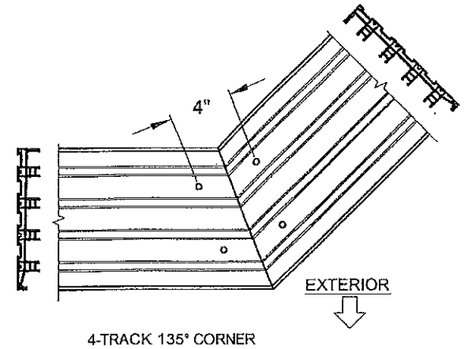


4-TRACK 135° CORNER
"C4" ANCHOR LOCATIONS
(USE WHERE "C3" IS SPECIFIED)

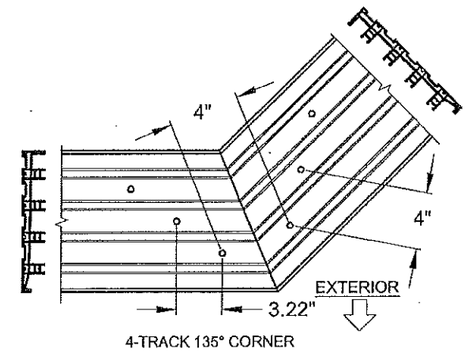


4-TRACK 135° CORNER
"C6" ANCHOR LOCATIONS
(USE WHERE "C5" IS SPECIFIED)

FIGURES PERTAIN TO THE FOLLOWING 135° CORNER SILL ANCHOR LOCATIONS:

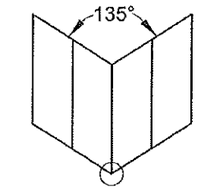


| | |
|---|---|
| Head/Sill | C3+1 |
| Jamb | 5 |
| P-hook | 7 |

**PRODUCT REVISED**
**as complying with the Florida Building Code**
**NOA-No. 17-0420.06**
**Expiration Date 04/14/2021**
**By**
**Miami-Dade Product Control**

ANTHONY LYNN MILLER
LICENSE
No. 58705
STATE OF FLORIDA
PROFESSIONAL ENGINEER
11/8/17

A. LYNN MILLER, P.E.
P.E.# 58705

FIGURES PERTAIN TO THE FOLLOWING 135° CORNER HEAD ANCHOR LOCATIONS:

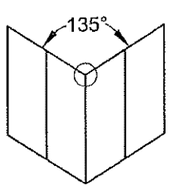


| | |
|---|---|
| Head/Sill | C3+1 |
| Jamb | 5 |
| P-hook | 7 |

NOTES:
1) ALL DIMENSIONS SHOWN ARE BASED ON MINIMUM ALLOWED.

2) DETAILS DEPICT ANCHOR QUANTITY AND SPACING, AND WOULD BE SIMILAR FOR OUTSIDE (SHOWN) AND INSIDE CORNER CONFIGURATIONS.

3) TRACK-TO-TRACK DISTANCE IS 2.375" FOR ALL HEADS AND SILLS:

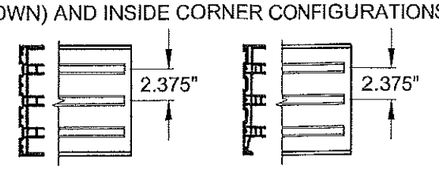



1070 TECHNOLOGY DR
N. VENICE, FL 34275
(941)-480-1600
CERT. OF AUTH. #29296

| | | | | | |
|---|---|---|---|---|---|
| Title | VINYL SLIDING GLASS DOOR NOA (LM) | | | Date | 10/05/15 |
| Desc. | ANCHOR LOCATIONS E | | | Drawn By | J ROSOWSKI |
| Rev | NO CHANGES THIS SHEET. | | | Rev Date | 04/05/17 |
| Rev | | | | Rev Date | |
| Series | SGD-5570 | Scale NTS | Sheet 15 OF 21 | DWG No. MD-5570.0 | Rev. No. A |

## HEAD SPLICE ANCHORS LAYOUT @ INTERLOCK OR ASTRAGAL:

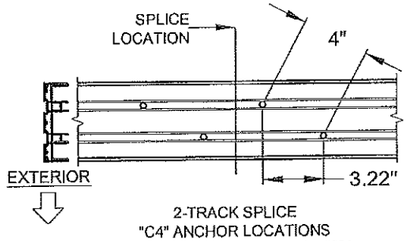


2-TRACK SPLICE
"C4" ANCHOR LOCATIONS
(USE WHERE "C3" IS SPECIFIED)

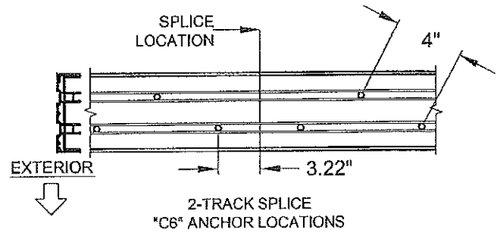


2-TRACK SPLICE
"C6" ANCHOR LOCATIONS
(USE WHERE "C5" IS SPECIFIED)

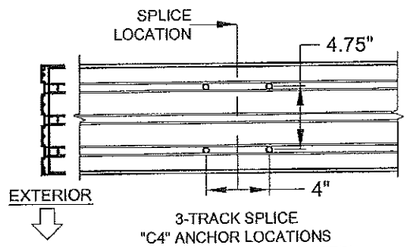


3-TRACK SPLICE
"C4" ANCHOR LOCATIONS
(USE WHERE "C3" IS SPECIFIED)

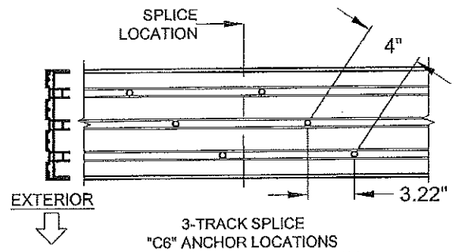


3-TRACK SPLICE
"C6" ANCHOR LOCATIONS
(USE WHERE "C5" IS SPECIFIED)

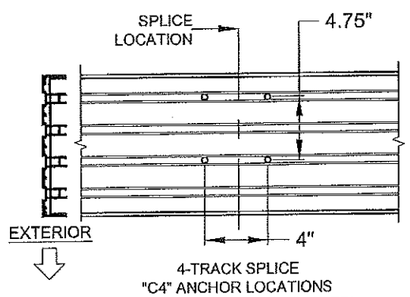


4-TRACK SPLICE
"C4" ANCHOR LOCATIONS
(USE WHERE "C3" IS SPECIFIED)

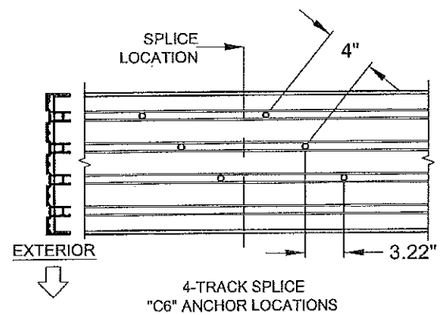


4-TRACK SPLICE
"C6" ANCHOR LOCATIONS
(USE WHERE "C5" IS SPECIFIED)

## SILL SPLICE ANCHORS LAYOUT @ INTERLOCK OR ASTRAGAL:

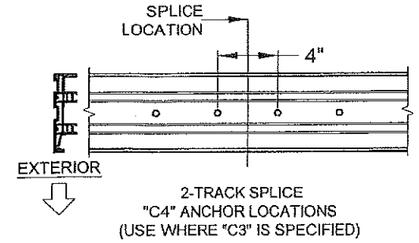


2-TRACK SPLICE
"C4" ANCHOR LOCATIONS
(USE WHERE "C3" IS SPECIFIED)

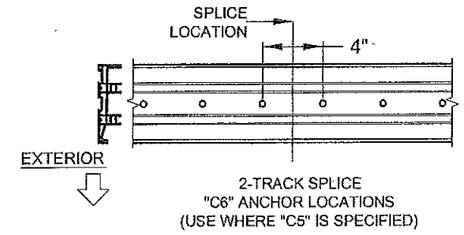


2-TRACK SPLICE
"C6" ANCHOR LOCATIONS
(USE WHERE "C5" IS SPECIFIED)

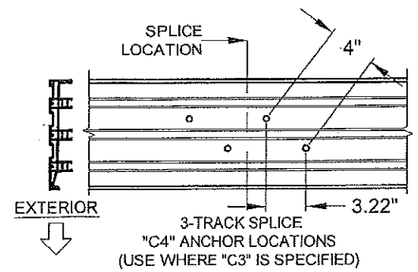


3-TRACK SPLICE
"C4" ANCHOR LOCATIONS
(USE WHERE "C3" IS SPECIFIED)

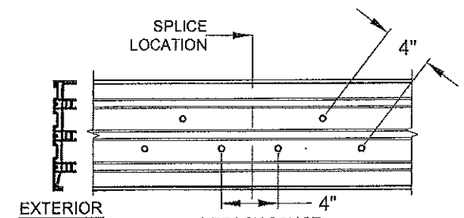


3-TRACK SPLICE
"C6" ANCHOR LOCATIONS
(USE WHERE "C5" IS SPECIFIED)

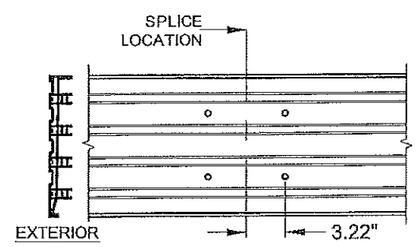


4-TRACK SPLICE
"C4" ANCHOR LOCATIONS
(USE WHERE "C3" IS SPECIFIED)

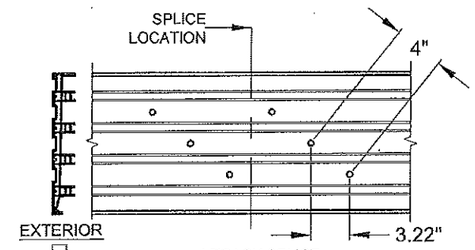


4-TRACK SPLICE
"C6" ANCHOR LOCATIONS
(USE WHERE "C5" IS SPECIFIED)

FIGURES PERTAIN TO THE FOLLOWING SPLICED SILL ANCHOR LOCATIONS:

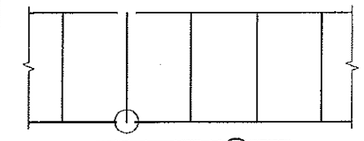

| | |
|---|---|
| Head/Sill | (C3)+1 |
| Jamb | 5 |
| P-hook | 7 |

**PRODUCT REVISED**
**as complying with the Florida Building Code**
**NOA-No. 17-0420.06**
**Expiration Date 04/14/2021**
**By**
**Miami-Dade Product Control**

ANTHONY LYNN MILLER
LICENSE
No. 58705
STATE OF FLORIDA
PROFESSIONAL ENGINEER

A. LYNN MILLER, P.E.
P.E.# 58705

NOTES:
1) ALL DIMENSIONS SHOWN ARE BASED ON MINIMUM ALLOWED.

2) ABOVE FIGURES ARE FOR SPLICES OCCURRING AT THE ASTRAGAL OR INTERLOCK. FOR SPLICES OCCURRING INSIDE OF A POCKET, SEE THE EXAMPLE ON SHEET 9.

3) TRACK-TO-TRACK DISTANCE IS 2.375" FOR ALL HEADS AND SILLS:

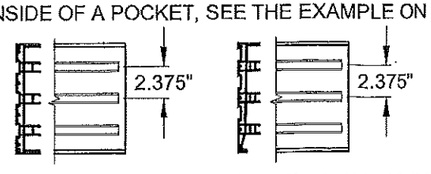


4) POCKET WALL OR CAVITY IS NOT PART OF THIS APPROVAL AND IS TO BE DESIGNED BY OTHERS AND REVIEWED BY THE AUTHORITY HAVING JURISDICTION.

FIGURES PERTAIN TO THE FOLLOWING SPLICED HEAD ANCHOR LOCATIONS:

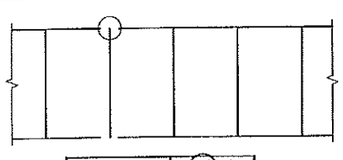

| | |
|---|---|
| Head/Sill | (C3)+1 |
| Jamb | 5 |
| P-hook | 7 |


1070 TECHNOLOGY DR
N. VENICE, FL 34275
(941)-480-1600
CERT. OF AUTH. #29296

| | | | | | |
|---|---|---|---|---|---|
| Title | VINYL SLIDING GLASS DOOR NOA (LM) | | | Date | 10/05/15 |
| Desc. | ANCHOR LOCATIONS F | | Drawn By | J ROSOWSKI | |
| Rev | NO CHANGES THIS SHEET. | | Rev Date | 04/05/17 | |
| Rev | | | Rev Date | | |
| Series | SGD-5570 | Scale NTS | Sheet 16 OF 21 | DWG No. MD-5570.0 | Rev. No. A |

| PANEL TYPES<br>INTERIOR OR EXTERIOR GLAZED | PANEL'S RIGHT STILE TYPE | | | | | | | | | |
|---|---|---|---|---|---|---|---|---|---|---|
| PANEL'S LEFT STILE TYPE | SINGLE INTERLOCK OUT | SINGLE INTERLOCK IN | FIXED STILE | LOCKSTILE W/ HANDLE | ASTRAGAL BOX OUT | ASTRAGAL BOX IN | OUTSIDE 90° ASTRAGAL RECEIVER | INSIDE 90° ASTRAGAL RECEIVER | OUTSIDE 135° ASTRAGAL RECEIVER | INSIDE 135° ASTRAGAL RECEIVER |
| SINGLE INTERLOCK OUT | E | F | PP | K | L (BOX OUT) | L (BOX IN) | TC | TA | TV | TW |
| SINGLE INTERLOCK IN | B | H | P | A | C (BOX OUT) | C (BOX IN) | SC | SA | SV | SW |
| FIXED STILE | RR | R | | | S (BOX OUT) | S (BOX IN) | FC | FD | FV | FW |
| LOCKSTILE W/ HANDLE | D | M | | | J (BOX OUT) | J (BOX IN) | | | | |
| ASTRAGAL BOX OUT | LR (BOX OUT) | | T (BOX OUT) | U (BOX OUT) | | | | | | |
| ASTRAGAL BOX IN | | N (BOX IN) | T (BOX IN) | U (BOX IN) | | | | | | |
| OUT. 90° ASTRAGAL RECEIVER | CT | CS | CF | | | | | | | |
| IN. 90° ASTRAGAL RECEIVER | AT | AS | DF | | | | | | | |
| OUT. 135° ASTRAGAL RECEIVER | VT | VS | VF | | | | | | | |
| IN. 135° ASTRAGAL RECEIVER | WT | WS | WF | | | | | | | |

| SCREEN PANEL TYPES | | | |
|---|---|---|---|
| C | DOUBLE INTERLOCK | | ASTRAGAL |
| M | LOCKSTILE | | DOUBLE INTERLOCK |
| J | LOCKSTILE | | ASTRAGAL |
| SD | SINGLE INTERLOCK | | DOUBLE INTERLOCK |
| A | DOUBLE INTERLOCK | | LOCKSTILE |
| U | ASTRAGAL | | LOCKSTILE |
| DS | DOUBLE INTERLOCK | | SINGLE INTERLOCK |

LEFT PANEL STILE

RIGHT PANEL STILE

PANEL TYPE "F" SHOWN.

PANEL NOTES:

1) SEE DP/ANCHOR TABLES 1 & 2, SHEETS 7-8 FOR PANEL SIZES & DESIGN PRESSURE.

2) PANEL TYPES NOT SHOWN ARE NOT REQUIRED FOR ANY CONFIGURATIONS AND ARE NOT AVAILABLE.

3) MAXIMUM NOMINAL PANEL WIDTH FOR ALL PANEL CONFIGURATIONS IS 60".

4) PANEL TYPE MAY BE EITHER EXTERIOR (STANDARD) OR INTERIOR GLAZED, BOTH TYPES QUALIFIED BY THIS APPROVAL, SEE DETAILS SHEET 10.

**PRODUCT REVISED**
as complying with the Florida Building Code
NOA-No. 17-0420.06
Expiration Date 04/14/2021
By
Miami-Dade Product Control

ANTHONY LYNN MILLER
LICENSE
No. 58705
STATE OF FLORIDA
PROFESSIONAL ENGINEER
A. LYNN MILLER, P.E.
P.E.# 58705



1070 TECHNOLOGY DR
N. VENICE, FL 34275
(941)-480-1600
CERT. OF AUTH. #29296

| | | | |
|---|---|---|---|
| Title | VINYL SLIDING GLASS DOOR NOA (LM) | Date | 10/05/15 |
| Desc. | PANEL TYPES | Drawn By | J ROSOWSKI |
| Rev | NO CHANGES THIS SHEET. | Rev Date | 04/05/17 |
| Rev | | Rev Date | |

| | | | | | | | | | |
|---|---|---|---|---|---|---|---|---|---|
| Series | SGD-5570 | Scale | NTS | Sheet | 17 OF 21 | DWG No. | MD-5570.0 | Rev. No. | A |

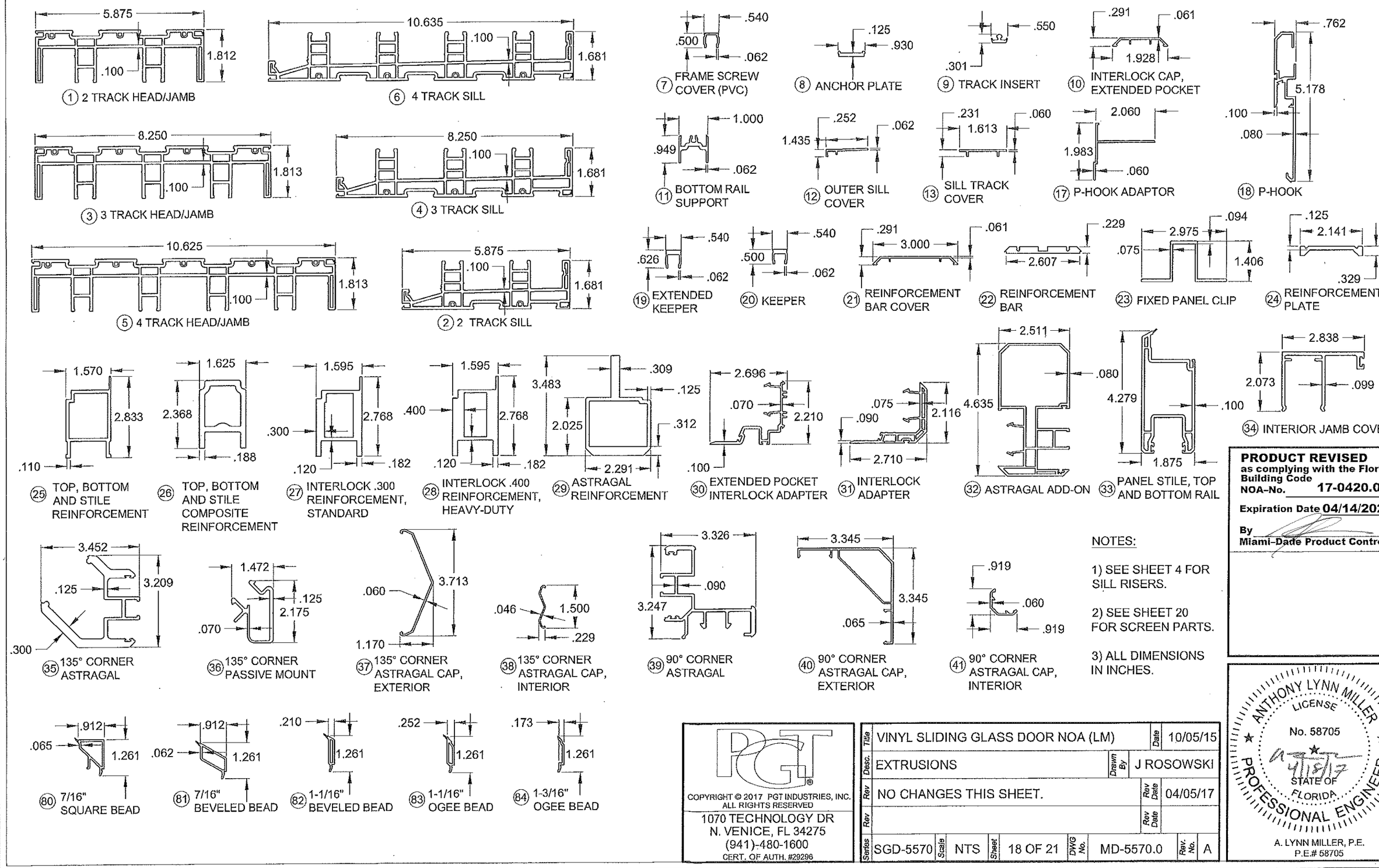


NOTES:

1) SEE SHEET 4 FOR SILL RISERS.

2) SEE SHEET 20 FOR SCREEN PARTS.

3) ALL DIMENSIONS IN INCHES.

**PRODUCT REVISED**
as complying with the Florida Building Code
NOA-No. 17-0420.06
Expiration Date 04/14/2021
By
Miami-Dade Product Control

ANTHONY LYNN MILLER
LICENSE
No. 58705
4/18/17
STATE OF FLORIDA
PROFESSIONAL ENGINEER
A. LYNN MILLER, P.E.
P.E.# 58705



1070 TECHNOLOGY DR
N. VENICE, FL 34275
(941)-480-1600
CERT. OF AUTH. #29296

| | | | |
|---|---|---|---|
| Title | VINYL SLIDING GLASS DOOR NOA (LM) | Date | 10/05/15 |
| Desc. | EXTRUSIONS | Drawn By | J ROSOWSKI |
| Rev | NO CHANGES THIS SHEET. | Rev Date | 04/05/17 |
| Rev | | Rev Date | |

| | | | | | | | | | |
|---|---|---|---|---|---|---|---|---|---|
| Series | SGD-5570 | Scale | NTS | Sheet | 18 OF 21 | DWG No. | MD-5570.0 | Rev. No. | A |

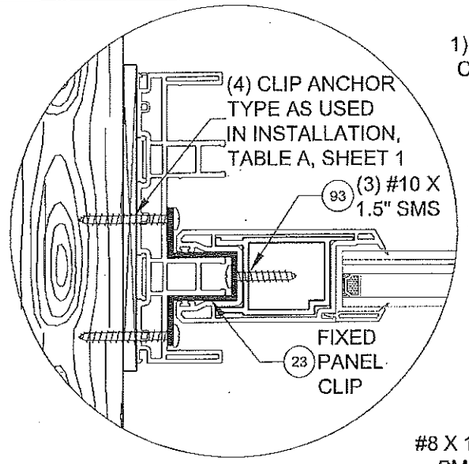


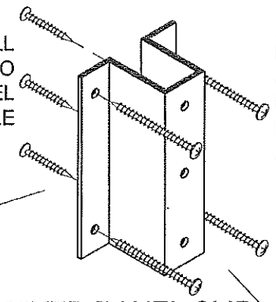


2) INSTALL CLIP INTO FRAME JAMB & SUBSTRATE, USING 4 INSTALLATION ANCHORS, SEE TABLE 1

## 23 FIXED PANEL CLIP

INSTALL ONE CLIP AT THE MIDSPAN OF EACH FIXED PANEL-TO-FRAME JAMB LOCATION.

## HEADER BLOCK TO HEAD ATTACHMENT

INSTALL ONE BLOCK AT EACH INTERLOCK. AT ASTRAGAL, INSTALL ONE BLOCK THAT SPANS BOTH PANELS.

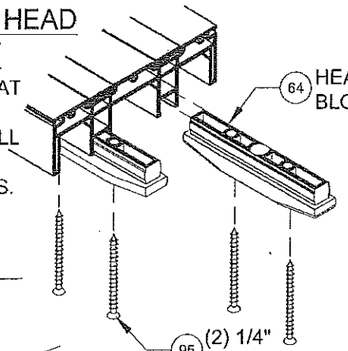


## JAMB TO HEAD ASSEMBLY

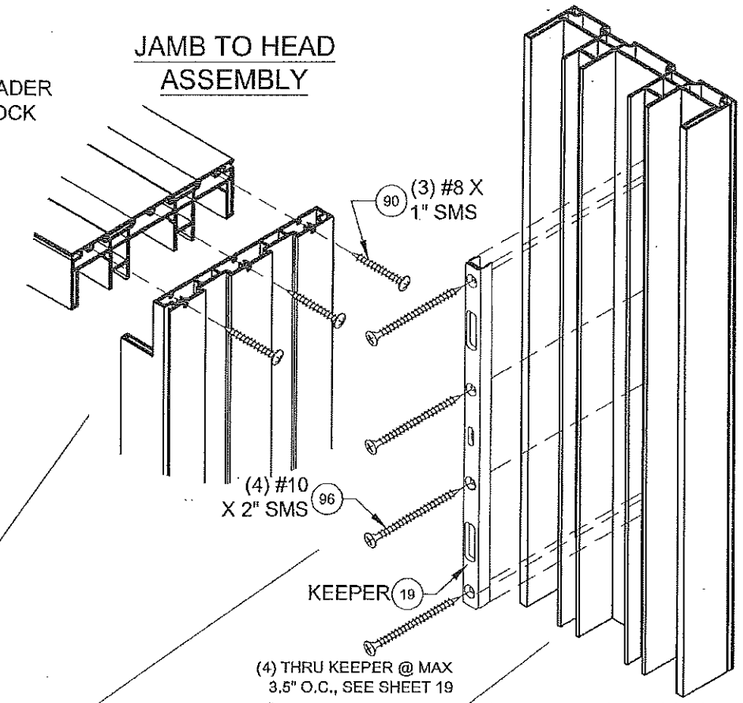


## KEEPER TO JAMB ATTACHMENT

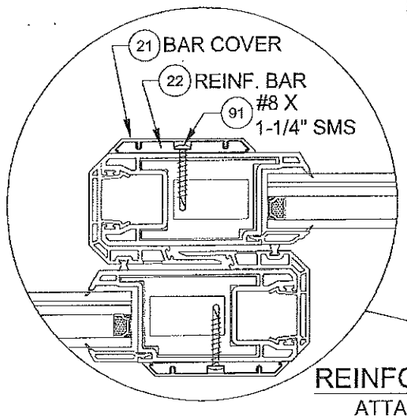


## REINFORCEMENT PLATE

ATTACH WITH #8 X 1-1/4" @ 34-1/2" MAX O.C.

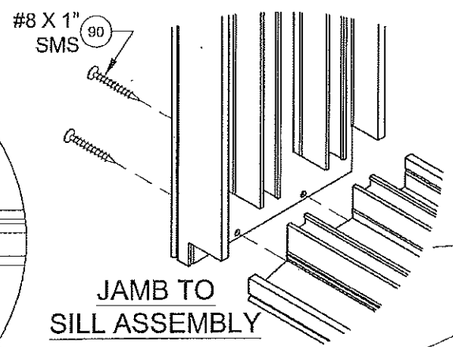


## JAMB TO SILL ASSEMBLY

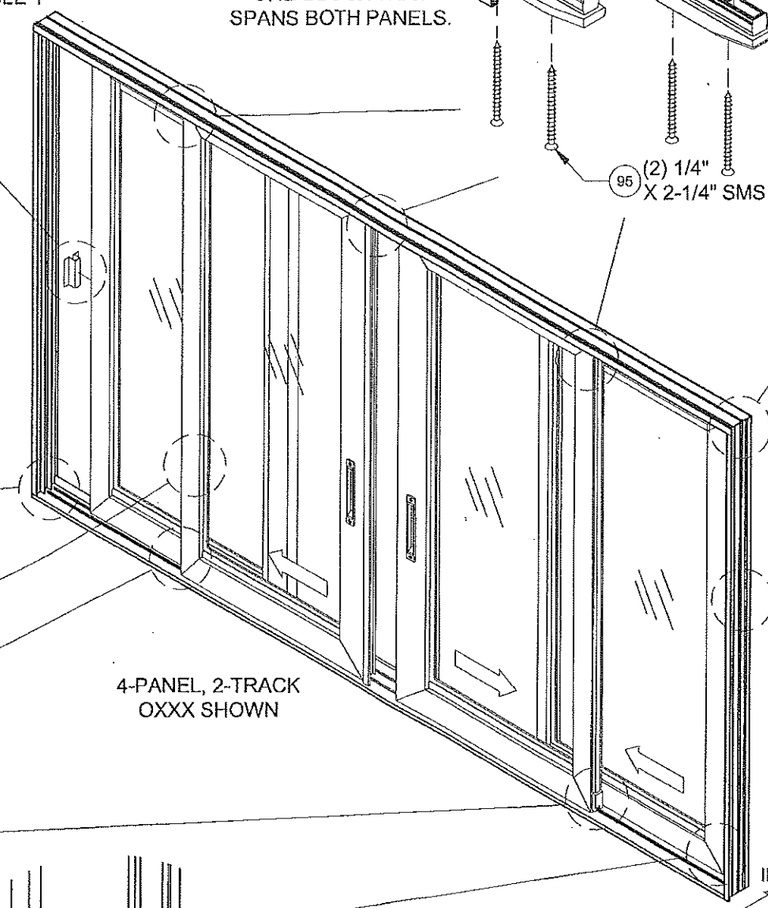


4-PANEL, 2-TRACK OXXX SHOWN

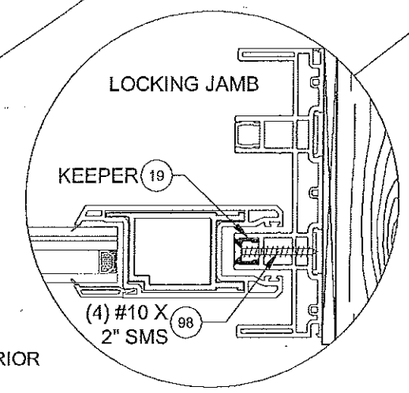


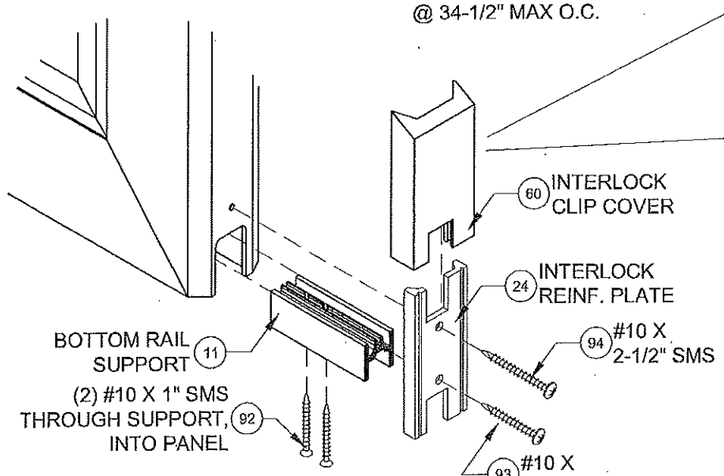


## INTERLOCK SILL RETAINER CLIP ATTACHMENT

INSTALL ONE ASSEMBLY AT EACH INTERLOCK

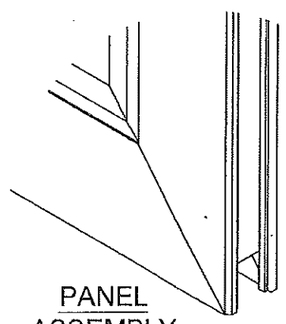

## PANEL ASSEMBLY

ALL PANEL CORNERS WELDED, NO ASSEMBLY FASTENERS

NOTES

1) DETAILS APPLY TO 2, 3 AND 4 TRACK CONFIGURATIONS.
2) SEE SHEETS 11-16 FOR ANCHOR LOCATION & SPACING.
3) SEE TABLES 1 & 2 FOR REINFORCEMENT REQUIREMENTS.
4) CONTINUOUS ANCHOR PLATE, ITEM #8, IS REQUIRED AT ALL FRAME ANCHOR LOCATIONS.

**PRODUCT REVISED**
as complying with the Florida Building Code
NOA-No. 17-0420.06
Expiration Date 04/14/2021
By
Miami-Dade Product Control



1070 TECHNOLOGY DR
N. VENICE, FL 34275
(941)-480-1600
CERT. OF AUTH. #29296

| | | | |
|---|---|---|---|
| Title | VINYL SLIDING GLASS DOOR NOA (LM) | Date | 10/05/15 |
| Desc. | ACCESSORIES INSTALLATION | Drawn By | J ROSOWSKI |
| Rev | CORRECTED #96 | Rev Date | 04/05/17 |
| Rev | | Rev Date | |

| | | | | | | | | | |
|---|---|---|---|---|---|---|---|---|---|
| Series | SGD-5570 | Scale | NTS | Sheet | 19 OF 21 | DWG No. | MD-5570.0 | Rev. No. | A |

ANTHONY LYNN MILLER
LICENSE
No. 58705
STATE OF FLORIDA
PROFESSIONAL ENGINEER
4/18/17

A. LYNN MILLER, P.E.
P.E.# 58705

## BOX SCREEN DETAILS:

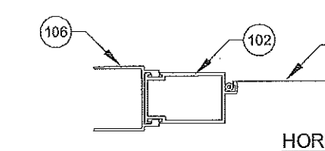


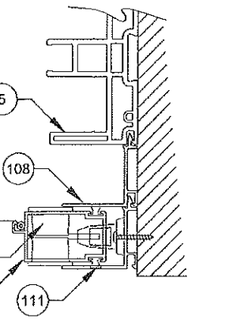


HORIZONTAL SECTION EXAMPLE

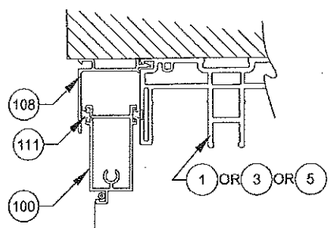


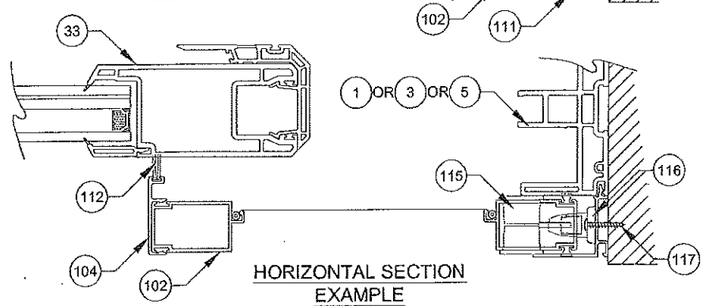


HORIZONTAL SECTION EXAMPLE

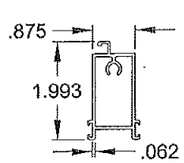


100 BOX SCREEN TOP RAIL

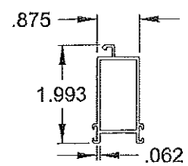


101 BOX SCREEN BOTTOM RAIL

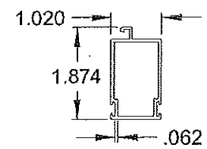


102 BOX SCREEN SIDE RAIL

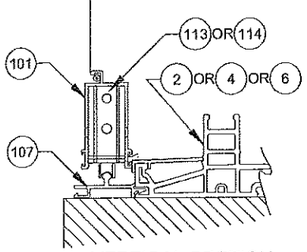


VERTICAL SECTION EXAMPLE

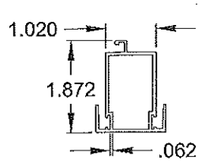


103 BOX SCREEN INTERLOCK

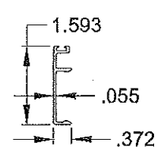


104 BOX SCREEN SNAP-ON BUG FLAP

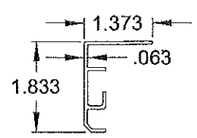


105 BOX SCREEN OXO ASTRAGAL ADAPTER

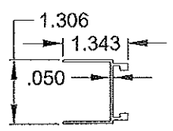


106 BOX SCREEN ASTRAGAL ADAPTER

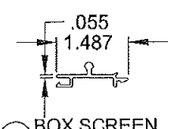


107 BOX SCREEN SILL ADD-ON

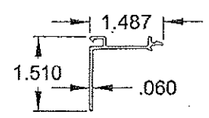


108 BOX SCREEN HEAD AND JAMB ADD-ON

## STANDARD SCREEN DETAILS:

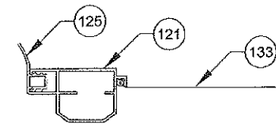


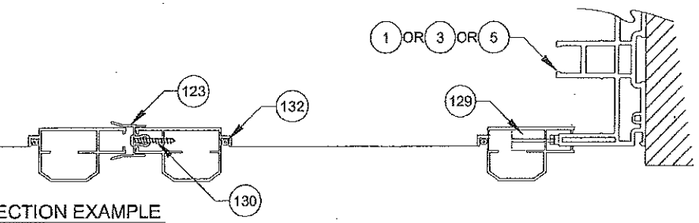


HORIZONTAL SECTION EXAMPLE

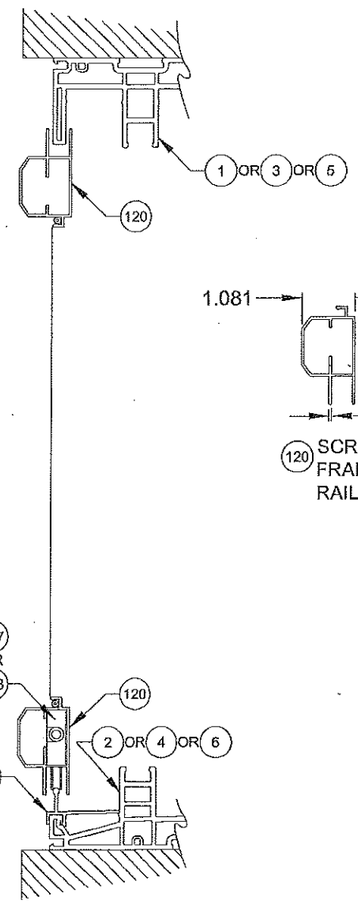


VERTICAL SECTION EXAMPLE

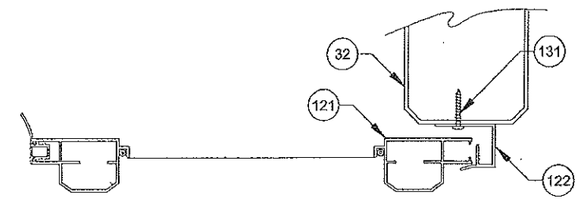


HORIZONTAL SECTION EXAMPLE

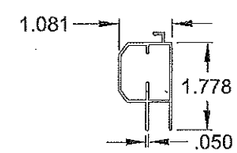


120 SCREEN FRAME RAIL

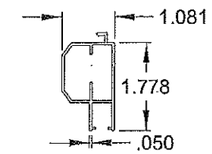


121 SCREEN SIDE RAIL, LATCH

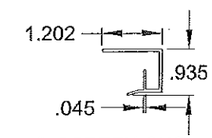


122 SCREEN OXO ASTRAGAL ADAPTER

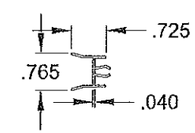


123 SCREEN VINYL ASTRAGAL ADAPTER

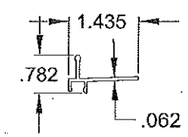


124 FRAME SILL SCREEN ADD-ON

**PRODUCT REVISED**
as complying with the Florida Building Code
NOA-No. 17-0420.06
Expiration Date 04/14/2021
By
Miami-Dade Product Control

NOTES:
1) ALL DIMENSIONS IN INCHES.



1070 TECHNOLOGY DR
N. VENICE, FL 34275
(941)-480-1600
CERT. OF AUTH. #29296

| | | | | | |
|---|---|---|---|---|---|
| Title | VINYL SLIDING GLASS DOOR NOA (LM) | | | Date | 10/05/15 |
| Desc. | SCREEN DETAILS | | | Drawn By | J ROSOWSKI |
| Rev | NO CHANGES THIS SHEET. | | | Rev Date | 04/05/17 |
| Rev | | | | Rev Date | |
| Series | SGD-5570 | Scale NTS | Sheet 20 OF 21 | DWG No. MD-5570.0 | Rev. No. A |

ANTHONY LYNN MILLER
LICENSE
No. 58705
STATE OF FLORIDA
PROFESSIONAL ENGINEER

A. LYNN MILLER, P.E.
P.E.# 58705

TABLE C:

| # | Part # | Description | Material |
|---|---|---|---|
| 1 | 19001 | 2-Track Head/Jamb | Rigid PVC |
| 2 | 19002 | 2-Track Sill | Rigid PVC |
| 3 | 19025 | 3-Track Head/Jamb | Rigid PVC |
| 4 | 19026 | 3-Track Sill | Rigid PVC |
| 5 | 19027 | 4-Track Head/Jamb | Rigid PVC |
| 6 | 19028 | 4-Track Sill | Rigid PVC |
| 7 | 19009 | Frame Screw Cover | Rigid PVC |
| 8 | 19031 | Anchor Plate | 6063-T6 Alum. |
| 9 | 19007 | Track Insert | 6063-T6 Alum. |
| 10 | 19084 | Interlock Cap - Extended Pocket | Rigid PVC |
| 11 | 19036 | Bottom Rail Support | 6063-T6 Alum. |
| 12 | 19006A | Outer Sill Cover | 6063-T6 Alum. |
| 13 | 19011 | Sill Track Cover | Rigid PVC |
| 17 | 19032 | P-Hook Adapter | 6063-T6 Alum. |
| 18 | 19020 | P-Hook | 6063-T6 Alum. |
| 19 | 19047M | Extended Keeper | 6063-T6 Alum. |
| 20 | 19029M | Keeper | 6063-T6 Alum. |
| 21 | 19014 | Reinforcement Bar Cover | Rigid PVC |
| 22 | 19030 | Reinforcement Bar | 6005-T5 Alum. |
| 23 | 19037M | Fixed Panel Clip | 6063-T6 Alum. |
| 24 | 19035M | Reinforcement Plate | 6063-T6 Alum. |
| 25 | 19017M | Top Rail, Bottom Rail and Lockstile Reinforcement | 6005-T5 Alum. |
| 26 | 19046 | | Composite |
| 27 | 19018M | Interlock .300 Reinforcement, Std. | 6005-T5 Alum. |
| 28 | 19013M | Interlock .400 Reinforcement, HD | 6005-T5 Alum. |
| 29 | 19019M | Astragal Reinforcement | 6005-T5 Alum. |
| 30 | 19083 | Extended Pocket Interlock Adaptor | 6063-T6 Alum. |
| 31 | 19005 | Interlock Adaptor | Rigid PVC |
| 32 | 19008 | Astragal Add-on | Rigid PVC |
| 33 | 19004 | Panel Stile, Top/Bottom Rail | Rigid PVC |
| 34 | 19040 | Interior Jamb Cover | 6063-T6 Alum. |
| 35 | 19076 | 135° Corner Astragal | 6063-T6 Alum. |
| 36 | 19077 | 135° Corner Astragal Passive Mount | 6063-T6 Alum. |
| 37 | 19079 | 135° Corner Astragal Cap - Ext. | Rigid PVC |
| 38 | 19080 | 135° Corner Astragal Cap - Int. | Rigid PVC |
| 39 | 19078 | 90° Corner Astragal | 6063-T6 Alum. |
| 40 | 19081 | 90° Corner Astragal Cap - Ext. | Rigid PVC |
| 41 | 19082 | 90° Corner Astragal Cap - Int. | Rigid PVC |

| # | Part # | Description | Material |
|---|---|---|---|
| 42 | 19085 | Sill Riser - (2-1/2") | 6063-T6 Alum. |
| 43 | 19022A | Sill Riser - (3-1/2") | 6063-T6 Alum. |
| 44 | 19023A | Sill Riser - (4-1/16") | 6063-T6 Alum. |
| 45 | 19024A | Sill Riser - (4-5/8") | 6063-T6 Alum. |
| 50 | 718609W | .187" x .320" Finseal (Stile) | |
| 51 | 71695K | 1-1/2" x 1" x 3/4" Fin Seal Dust Plug | |
| 52 | 71696 | Dust Plug | |
| 60 | 419041 | Interlock Clip Cover | PVC |
| 61 | 78153X | Tandem Roller Assembly | SS |
| 62 | 78153N | Tandem Roller Assembly | Nylon |
| 63 | 78X75FPTX | #8 x 3/4" Ph. FH SMS @ Roller & Reinf. | SS |
| 64 | 419042 | Frame Header Block | Nylon |
| 65 | 48052 | Roller Adj. Hole Plug | PVC |
| 66 | 44385 | 4 Hole Bumper Stop | PVC |
| 67 | 76X114FPTX | #6 x 1-1/4" Ph. FH SMS @Bumper Stop | SS |
| 68 | 71696G | Sill Plug | PVC |
| 69 | 78185X | Gemini Mortise Lock w/long Trim plate | Steel/SS |
| 70 | 71032X1FPFX | 10-32 x 1" Ph.FH MS @ Lock | SS |
| 71 | varies | Handle Kit | Cast Zinc |
| 72 | 19054 | Interlock Retainer Clip | Nylon |
| 75 | | Kommerling 4SG TPS Spacer System | See Sheet 10 for Materials |
| 76 | | Quanex Super Spacer nXT with Hot Melt Butyl | |
| 77 | | Quanex Duraseal | |
| 78 | | Cardinal XL Edge Spacer | |
| 79 | | Dow Corning 995 or GE-7700 Backbedding | Silicone |
| 80 | 19090 | 7/16" Square Bead | Rigid PVC |
| 81 | | 7/16" Beveled Bead | Rigid PVC |
| 82 | 19044 | 1-1/16" Beveled Bead | Rigid PVC |
| 83 | 19045 | 1-1/16" Ogee Bead | Rigid PVC |
| 84 | 19016 | 1-3/16" Ogee Bead | Rigid PVC |
| 85 | 71725K | Setting Block 1/2" x 4" x 1/16", 85 +/- 5 duro. | Neoprene |
| 86 | 71726K | Setting Block 1" x 4" x 1/16", 85 +/- 5 duro. | Neoprene |
| 90 | 781PSTX | #8 x 1" Ph. PH SMS @ Frame Assembly | SS |
| 91 | 78X114PHPT410X | #8 x 1-1/4" Ph. PH SMS @ Reinf. Bar | SS |
| 92 | 710X1PHPT18-8X | #10 x 1" Ph. PH SMS @ Rail Support | SS |
| 93 | 710X115PPX | #10 x 1-1/2" Ph. PH SMS @ Fxd. Pnl. Clip | SS |
| 94 | 710X2.5PHPT18-8X | #10 x 2-1/2" Ph. PH SMS @ Reinf. Plate/Ast. | SS |
| 95 | 71420X2.25FPFX | #12 x 2-1/4" Ph. PH SMS @ Hdr. Block | SS |
| 96 | 710X1.75PPX | #10 x 1-3/4" Ph. FH SMS @ Ast. Mount | SS |
| 97 | 710X34PPX | #10 x 3/4" Ph. PH SMS @ Ext. Pkt. Int. | SS |
| 98 | 710X2PPX | #10 x 2" Ph. FH SMS @ Keeper | SS |

TABLE D: BOX SCREEN

| # | Part # | Description | Material |
|---|---|---|---|
| 100 | 12256 | Box Screen Top Rail | 6063 T5 Al |
| 101 | 12257 | Box Screen Bottom Rail | 6063 T5 Al |
| 102 | 12258 | Box Screen Side Rail | 6063 T5 Al |
| 103 | 64428 | Box Screen Interlock | 6063 T6 Al |
| 104 | 17347A | Box Screen Snap-on Bug Flap | 6063 T6 Al |
| 105 | 64345 | Box Screen OXO Astragal Adapter | 6063 T6 Al |
| 106 | 17349 | Box Screen Astragal Adapter | 6063 T5 Al |
| 107 | 19039 | Box Screen Frame Sill Add-on | 6063 T6 Al |
| 108 | 19038 | Box Screen Head/Jamb Add-on | 6063 T6 Al |
| 109 | 720X1X | #14-20 x 1" MS @ Top Rail | SS |
| 110 | 720X112X | #14-20 x 1-1/2" MS @ Bottom Rail | SS |
| 111 | 71793G | Wstp, .270" x .150' - Fin Seal | |
| 112 | 61805K | Wstp, .187" x .500" @ Bug Flap | |
| 113 | 7SRAZ | Standard Roller | Nylon |
| 114 | 7SRAX | HD Roller | SS |
| 115 | varies | Screen Locking Hardware | Steel |
| 116 | 419053 | Screen Keeper | Steel |
| 117 | 76X1PPA | #6 x 1" Ph. PH SMS | Steel |
| 118 | 1692/3/4 | Screen Spline - .150" & .165" | Vinyl |
| 119 | 1816C20 | Screen Cloth | Fiberglass |

TABLE E: STANDARD SCREEN

| # | Part # | Description | Material |
|---|---|---|---|
| 120 | 12033 | Screen Frame Rail | 6063 T5 Al |
| 121 | 12026A | Screen Frame - Side Rail (Latch) | 6063 T5 Al |
| 122 | 17363 | Screen OXO Astragal Adapter | 6063 T6 Al |
| 123 | 4853K | Screen Vinyl Astragal Adapter | Rigid PVC |
| 124 | 19012B | Frame Sill Screen Add-on | 6063 T6 Al |
| 125 | 6FP95K | Bug Flap, 85 +/- 5 duro. | Vinyl |
| 126 | 78X112PSATS | #8 x 1-1/2" Ph. PH SMS (Assembly) | SS |
| 127 | 712027 | Corner Key Wheel Assembly (Standard) | Nylon |
| 128 | 712027SS | Corner Key Wheel Assembly (HD) | SS |
| 129 | varies | Screen Locking Hardware | Steel |
| 130 | 710X34PPSDAX | #10 x 3/4" Ph. PH SMS @ Screen Ast. | SS |
| 131 | 78X12PPSMSX | #8 x 1/2" Ph. PH SMS @ Door Ast. | SS |
| 132 | 1692/3/4 | Screen Spline - .145" | Vinyl |
| 133 | 1816C20 | Screen Cloth | Fiberglass |

NOTES:
1) ITEMS #14-16, 46-49, 53-59, 73, 74 & 87-89 & 99 ARE NOT USED AND ARE NOT PART OF THIS APPROVAL.


1070 TECHNOLOGY DR
N. VENICE, FL 34275
(941)-480-1600
CERT. OF AUTH. #29296

| | | | | | |
|---|---|---|---|---|---|
| Title | VINYL SLIDING GLASS DOOR NOA (LM) | | | Date | 10/05/15 |
| Desc. | PARTS LIST | | Drawn By | J ROSOWSKI | |
| Rev | NO CHANGES THIS SHEET. | | Rev Date | 04/05/17 | |
| Rev | | | Rev Date | | |
| Series | SGD-5570 | Scale NTS | Sheet 21 OF 21 | DWG No. MD-5570.0 | Rev. No. A |

**PRODUCT REVISED**
**as complying with the Florida Building Code**
**NOA-No. 17-0420.06**
**Expiration Date 04/14/2021**
**By**
**Miami-Dade Product Control**

ANTHONY LYNN MILLER
LICENSE
No. 58705
STATE OF FLORIDA
PROFESSIONAL ENGINEER
4/18/17

A. LYNN MILLER, P.E.
P.E.# 58705