MIAMI-DADE COUNTY
PRODUCT CONTROL SECTION
11805 SW 26 Street, Room 208
Miami, Florida 33175-2474
T (786) 315-2590 F (786) 315-2599
www.miamidade.gov/economy

DEPARTMENT OF REGULATORY AND ECONOMIC RESOURCES (RER)
BOARD AND CODE ADMINISTRATION DIVISION

NOTICE OF ACCEPTANCE (NOA)

Schlage Lock Company
6810 Hillsdale Court
Indianapolis, IN 46250

SCOPE:

This NOA is being issued under the applicable rules and regulations governing the use of construction materials. The documentation submitted has been reviewed and accepted by Miami-Dade County RER -Product Control Section to be used in Miami Dade County and other areas where allowed by the Authority Having Jurisdiction (AHJ).

This NOA shall not be valid after the expiration date stated below. The Miami-Dade County Product Control Section (In Miami Dade County) and/or the AHJ (in areas other than Miami Dade County) reserve the right to have this product or material tested for quality assurance purposes. If this product or material fails to perform in the accepted manner, the manufacturer will incur the expense of such testing and the AHJ may immediately revoke, modify, or suspend the use of such product or material within their jurisdiction. RER reserves the right to revoke this acceptance, if it is determined by Miami-Dade County Product Control Section that this product or material fails to meet the requirements of the applicable building code.

This product is approved as described herein, and has been designed to comply with the Florida Building Code, including the High Velocity Hurricane Zone.

DESCRIPTION: SteelCraft H Series Single Flush Outswing Commercial Steel Door w/wo Panic Exit-LMI

APPROVAL DOCUMENT: Drawing No **IRGS07 Rev M**, titled "Steelcraft H series Single Flush outswing", sheets 1 through 14 of 14, prepared by the manufacturer, dated 05-20-07 and last revised on 03/29/18, signed and sealed by Hermes F. Norero, P.E., bearing the Miami-Dade County Product Control Revision stamp with the Notice of Acceptance number and expiration date by the Miami-Dade County Product Control Section.

MISSILE IMPACT RATING: Large and Small Missile Impact

Limitations:

1. See sheets 1 & 2 for Design Pressures, Sizes and Hardware. See sheets **5** and **6** for door sizes VS threshold types, brand and water infiltration limitations. Lower design Pressure shall control the entire assembly.
2. Use of Ives viewers (model U696/U698) is limited to +/-75 PSF.
3. Electrical/Electronic functions and Fire ratings are **not** part of this approval, such functions to be reviewed and approved by AHJ.

LABELING: Each unit shall bear a permanent label with the manufacturer's name or logo, Cincinnati, Ohio and Series and following statement: "Miami-Dade County Product Control Approved", unless otherwise noted herein.

RENEWAL of this NOA shall be considered after a renewal application has been filed and there has been no change in the applicable building code negatively affecting the performance of this product.

TERMINATION of this NOA will occur after the expiration date or if there has been a revision or change in the materials, use, and/or manufacture of the product or process. Misuse of this NOA as an endorsement of any product, for sales, advertising or any other purposes shall automatically terminate this NOA. Failure to comply with any section of this NOA shall be cause for termination and removal of NOA.

ADVERTISEMENT: The NOA number preceded by the words Miami-Dade County, Florida, and followed by the expiration date may be displayed in advertising literature. If any portion of the NOA is displayed, then it shall be done in its entirety.

INSPECTION: A copy of this entire NOA shall be provided to the user by the manufacturer or its distributors and shall be available for inspection at the job site at the request of the Building Official.

This NOA **revises & renews NOA #17-0320.06** and consists of this page 1 and evidence pages E-1, E-2, E-3 and E-4, as well as approval document mentioned above.

The submitted documentation was reviewed by **Ishaq I. Chanda, P.E.**

MIAMI-DADE COUNTY APPROVED

4/17/18

NOTICE OF ACCEPTANCE: EVIDENCE SUBMITTED

1. **Evidence submitted under previous approvals**

A. DRAWINGS

1. Manufacturer's parts and sections drawings (Submitted under file as below).
2. Drawing No **IRGS07 Rev L**, titled "Steelcraft H series Single Flush outswing", sheets 1 through 15 of 15, prepared by the manufacturer, dated 05-20-07 and last revised on 08/11/15, signed and sealed by Thomas Gordon, P.E.

B. TESTS (Submitted under files **#15-0826.23/#13-1217.16/#12-0305.14/ #10-0209.07/#07-0829.04**)

1. Test report on
   1) Air Infiltration Test, per TAS 202-94
   2) Uniform Static Air Pressure Test, Loading per TAS 202-94
   3) Large Missile Impact Test per FBC, TAS 201-94
   4) Cyclic Wind Pressure Loading per FBC, TAS 203-94
   5) Forced Entry Test, per PA 202-94

Along with manufacturer's parts and section drawings of Single outswing steel doors w/ Stainless steel continuous Hinges & modified Hat stiffeners, marked by Certified Testing Lab, Test Reports No(s). **CTLA-3045W** dated February 16, 2015, signed and sealed by Ramesh Patel, P.E.

Along with manufacturer's parts and section drawings of double outswing steel doors w/CVC panic exit and Peep hole, marked by Element Material Technology, Test Reports No(s). **ESP011623P** dated May 14, 2013, signed and sealed by Jason Sheen, P.E.

Along with manufacturer's parts and section drawings of double flush outswing steel doors, marked by National Certified Testing Lab, Test Reports No. **NCTL-210- 3580-2,** dated March 25, 2009, signed and sealed by Gerry Ferrara, P. E.

2. Test reports
   1) Uniform Static Air Pressure Test, Loading per FBC TAS 202-94.
   2) Water Resistance Test per FBC TAS 202-94

Along with marked-up drawings and installation diagram of double steel commercial doors, prepared by National Certified Testing Laboratories Inc., Test Report No. **NCTL- 210-03-0514-11,** dated August 31, 2004 , **NCTL 210- 03-3511-1** dated 04/09/08 and **NCTL 210- 03-3549-1** dated 08/26/08, all signed and sealed by Gerry Ferrara, P. E.

Note: Test report No(s): NCTL210-3549-1 and NCTL-210-3511-1 have been revised by an addendum letter, issued by Lab, dated Feb. 04, 2009, signed & sealed by Gerard J. Ferrara, P. E

3. Test report on (submitted under file # **07-0829.04**)
   1) Air Infiltration Test, per TAS 202-94
   2) Uniform Static Air Pressure Test, Loading per TAS 202-94
   3) Large Missile Impact Test per FBC, TAS 201-94
   4) Cyclic Wind Pressure Loading per FBC, TAS 203-94
   5) Forced Entry Test, per PA 202-94

Along with manufacturer's parts and section drawings of double glazed outswing steel doors, marked by Certified Testing Lab, Test Reports No(s). **CTLA-776W** dated February 20, 2002, **CTLA-975W** dated Jan 23, 2003, **CTLA-882W** dated Aug 29, 2002, **CTLA-1035W** dated May 28, 2003 and , **CTLA-1086-W** dated Nov. 17, 2003 and **CTLA-1107W-3** dated June 30, 2004, all signed and sealed by Ramesh Patel, P.E. (this report has addendum letter dated Feb 20, 2009, signed and sealed by Ramesh Patel, P.E.

Ishaq I. Chanda

Ishaq I. Chanda, P.E.
Product Control Examiner
NOA No. 17-0426.02
Expiration Date: May 05, 2023
Approval Date: April 26, 2018

NOTICE OF ACCEPTANCE: EVIDENCE SUBMITTED

C. CALCULATIONS: (Submitted under file # **15-0826.23**)

1. Anchor verification calculation complying w/ FBC 2014(5th Edition) dated 08/10/15, prepared, signed & sealed by Thomas Gordon., P.E.
2. Hinge Load Evaluation report dtd 01/04/04, prepared, signed & sealed by Thomas Gordon, P.E. (Submitted under file # **10-0209.09**)

D. QUALITY ASSURANCE BY

1. Miami Dade Department of Regulatory and Economic Resources (RER).

E. MATERIAL CERTIFICATIONS (submitted under files #**12-0305.16/# 10-0209.09**)

1. Material composition & Flammability properties and Material Safety Data sheet of Pyrophobic P25C-60 core by Pyrophobic System LTD, dated DEC 05, 2010, issued by I. Zhvanetsky, chemical consultant.
2. Material composition & Flammability properties and Material Safety Data sheet of Calcium Silicate mineral block, issued by Marshfield Door Sys, Inc., Marshfield. WI 54449.
3. Test Report No. **12-11177**, Nov 29, 2012, issued by Commercial Testing Co. for "Surface Flame spread & Smoke density Characteristics of Building material" per ASTME84-12 for "Elfoam P200", issued to Elliott Co. of Indianapolis Inc.
4. Test Report No. **16206-122543 (1015P200(3))**, dated November 29, 2004 for " Surface Burning Characteristics of Bldg material" per ASTME84 and self-Ignition per ASTM1929D for "Polyisocyanurate" issued by Omega Point Laboratories, Inc. to Elliot Co., Indianapolis, IN.
5. Tensile test report # CTLA-776W (0194H), dtd 02/25/02 prepared by CTL, Architectural Division, sheet samples, tested per ASTM E8, signed & sealed by Ramesh Patel, P.E.
6. Tensile Test report No: A103W1-Test 1, 2 & 3 dated 23 APR 03 per ASTME-8 for steel face sheet, prepared by Certified Testing laboratory, signed and sealed by Ramesh Patel, P.E.
7. Test Report No. **3094867SAT-001**, April 13, 2006, issued by Intertek for "Surface Burning Characteristics of Building material" per ASTME84 and self-Ignition per ASTM1929D for "EPS", issued to Falcon Foam, a Div of Atlas Roofing, re-named as "ATLAS EPS'.

F. STATEMENTS: Except items #1, balanced items submitted under files #**13-1217.16/ #10-0209.09**

1. Letter of conformance to **FBC 2014** and **"No financial interest"**, dated 09/23/15, prepared, signed and sealed by Gordon Thomas, P.E.
2. Statement letter dated Nov. 26, 2013 issued by Ingersoll-Rand for name change, signed by Jim Donlan, Compliance Engineer.
3. Ingersoll–Rand press release, dated 12/10/12, integrating the brands of Ingersoll–Rand and Schlage among others.
4. Department of State Certification of Reinstatement for **SCHLAGE LOCK COMPANY, LLC** as a limited liability company, active and organized under the laws of the State of Florida, dated 03/17/06 and filed with the Secretary of State
5. Certification of Formation dated 12-08-2003 of Schlage Lock Company, LLC, issued by Secretary of State of Delaware.
6. Laboratory Compliance Statements issued as part of above test reports.
7. Addendum letter dated DEC 19, 2011, issued by Certified Testing Lab verifying wire anchors, strength of grout, stud anchor, Strike plate and MA series Mortise Lock, supplemented w/ marked-up drawings, signed and sealed by Ramesh Patel, P.E.
8. Letter of certification dated 04/20/10, issued by Ingersoll-Rand for electronic CO lock series mechanical /functional parts same as AD, ND and AD-M series.

Ishaq I. Chanda

Ishaq I. Chanda, P.E.
Product Control Examiner
NOA No. 17-0426.02
Expiration Date: May 05, 2023
Approval Date: April 26, 2018

NOTICE OF ACCEPTANCE: EVIDENCE SUBMITTED

G. OTHER

1. This NOA **renews NOA #15-0826.23,** expiring on 05/05/18.
2. Request for 1-Year renewal by Schlage Company dated 04/20/17, signed by James Donlan.
3. Test proposals # **14-0252**, **-0254**, **#14-1086**, **#14-0254-R1** and **#12-0797R** approved by RER.
4. Consolidation Test proposal # **06-2468**, dated 04/27/07 approved by BCCO.
5. Previously consolidated NOA(s) associated with this file are NOA(s) #1029.07, 07-829.04, 020712.01, 02-0712.03, 03-0908.03, 04-0303.03 and 05-0103.01.
6. Technical brochures of butt Hinges, continuous Hinges, Schlage & Falcon Mortise Locks, Supplied by Schlage Company (former Ingersoll-Rand).

2. New Evidence submitted.

A. DRAWINGS

1. Drawing No **IRGS07 Rev M**, titled "Steelcraft H series Single Flush outswing", sheets 1 through 14 of 14, prepared by the manufacturer, dated 05-20-07 and last revised on 03/29/18, signed and sealed by Hermes F. Norero, P.E.

B. TESTS

1. Additional Test report on
   1) Uniform Static Air Pressure Test, Loading per TAS 202-94
   2) Large Missile Impact Test per FBC, TAS 201-94
   3) Cyclic Wind Pressure Loading per FBC, TAS 203-94
   4) Forced Entry Test, per PA 202-94

Along with manufacturer's parts and section drawings of double flush outswing steel doors, marked by National Certified Testing Lab, Test Reports No. **NCTL-210- 3580-2,** dated March 25, 2009, signed and sealed by Gerry Ferrara, P. E.

Along with manufacturer's parts and section drawings of glazed outswing double steel doors, marked by Certified Testing Lab, Test Reports No(s). **NCTL-210-3232-1** dated 02/24/06 and **NCTL-210-3357-1** dated Dec 28, 2006, signed and sealed by Gerard J. Ferrara, P.E.

Along with manufacturer's parts and section drawings of glazed outswing double steel doors, marked by Certified Testing Lab, Test Reports No(s). **NCTL-210-3232-1** dated 02/24/06 and **NCTL-210-3357-1** dated Dec 28, 2006, signed and sealed by Gerard J. Ferrara, P.E

2. Additional Reference test report No.CTLA-1107W for strap anchor qualification.

C. CALCULATIONS:

1. Anchor verification calculation complying w/ FBC 2017(6th Edition) dated 04/04/2017 and last revised on 02/12/2018, prepared by Building Drops, signed & sealed by Hermes F. Norero., P.E.

D. QUALITY ASSURANCE BY

1. Miami Dade Department of Regulatory and Economic Resources (RER).

E. MATERIAL CERTIFICATIONS:

1. None.

Ishaq I. Chanda

Ishaq I. Chanda, P.E.
Product Control Examiner
NOA No. 17-0426.02
Expiration Date: May 05, 2023
Approval Date: April 26, 2018

NOTICE OF ACCEPTANCE: EVIDENCE SUBMITTED

F. STATEMENTS: (items # 2 thru 6, submitted under file # **17-1026.24**)

1. Letter of adoption of another Engineer's work per FLA rule 61G15-27, dated 03/14/2017, prepared by Building Drops, Inc., signed and sealed by Hermes F. Norero, P.E.
2. Letter of conformance to FBC 2014 (**5th** Edition) and FBC 2017 (6th Edition), dated 02/08/18, prepared by Building Drops, Inc., signed and sealed by Hermes F. Norero, P.E.
3. Ingersoll–Rand press release, dated 12/10/12, integrating the brands of Ingersoll–Rand and Schlage among others.
4. Department of State Certification of Reinstatement for **SCHLAGE LOCK COMPANY, LLC** as a limited liability company, active and organized under the laws of the State of Florida, dated 03/17/06 and filed with the Secretary of State
5. Certification of Formation dated 12-08-2003 of Schlage Lock Company, LLC, issued by Secretary of State of Delaware.
6. Statement letter dated Nov. 26, 2013 issued by Ingersoll-Rand for name change, signed by Jim Donlan, Compliance Engineer.
7. Letter of certification dated 04/20/10, issued by Ingersoll-Rand for electronic CO lock series mechanical /functional parts same as AD, ND and AD-M series.
8. Addendum letters dated Feb 20, 2009 for test reports Test report CTLA-1035W, issued by Certified Testing lab, signed and sealed by Ramesh Patel, P.E
9. Addendum letter dated DEC 19, 2011, issued by Certified Testing Lab verifying wire anchors, strength of grout, stud anchor, Strike plate and MA series Mortise Lock, supplemented w/ marked-up drawings, signed and sealed by Ramesh Patel, P.E.

G. OTHER

1. This NOA **revises & renews NOA #17-0326.06,** expiring on 05/05/23.
2. Test proposals # **14-0252**, **-0254**, **#14-1086**, **#14-0254-R1** and **#12-0797R** approved by RER.
3. Consolidation Test proposal # **06-2468**, dated 04/27/07 approved by BCCO.
4. Technical brochures of butt Hinges, continuous Hinges, Schlage & Falcon Mortise Locks, Supplied by Schlage Company (former Ingersoll-Rand).

Ishaq I. Chanda

Ishaq I. Chanda, P.E.
Product Control Examiner
NOA No. 17-0426.02
Expiration Date: May 05, 2023
Approval Date: April 26, 2018

MORTISE LOCKSET WITH DEADBOLT FUNCTION

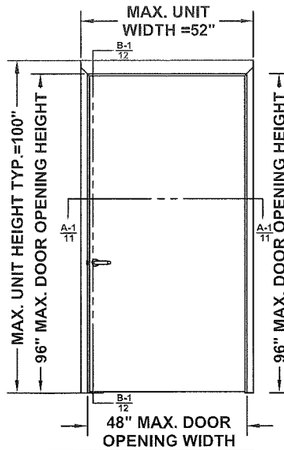

CONFIG.	DESIGN PRESSURE RATING, PSF: WHERE WATER INFILTRATION REQUIREMENT IS NEEDED SEE SHEET 5	DESIGN PRESSURE RATING, PSF: WHERE WATER INFILTRATION REQUIREMENT IS NOT NEEDED SEE SHEET 6
1	±75	±75

CYLINDRICAL LOCKSET 1/2" THROW LATCH

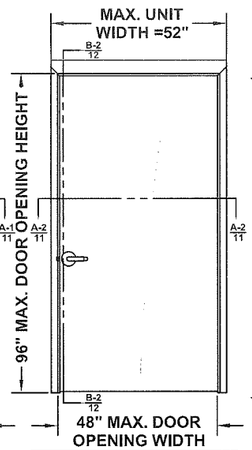

CONFIG.	DESIGN PRESSURE RATING, PSF: WHERE WATER INFILTRATION REQUIREMENT IS NEEDED SEE SHEET 5	DESIGN PRESSURE RATING, PSF: WHERE WATER INFILTRATION REQUIREMENT IS NOT NEEDED SEE SHEET 6
2	±55	±55

CYLINDRICAL LOCKSET 1/2" THROW LATCH

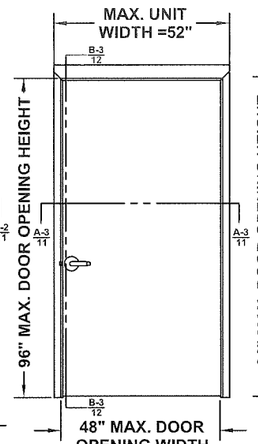

CONFIG.	DESIGN PRESSURE RATING, PSF: WHERE WATER INFILTRATION REQUIREMENT IS NEEDED SEE SHEET 5	DESIGN PRESSURE RATING, PSF: WHERE WATER INFILTRATION REQUIREMENT IS NOT NEEDED SEE SHEET 6
3	±65	±65

CYLINDRICAL LOCKSET 3/4" THROW LATCH

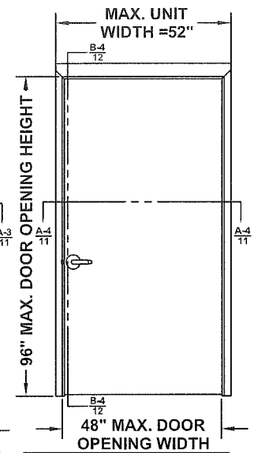

CONFIG.	DESIGN PRESSURE RATING, PSF: WHERE WATER INFILTRATION REQUIREMENT IS NEEDED SEE SHEET 5	DESIGN PRESSURE RATING, PSF: WHERE WATER INFILTRATION REQUIREMENT IS NOT NEEDED SEE SHEET 6
4	±75	±75

SURFACE VERTICAL ROD EXIT DEVICE

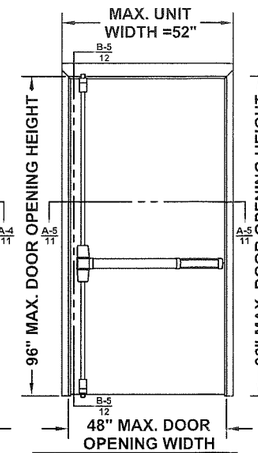

CONFIG.	DESIGN PRESSURE RATING, PSF: WHERE WATER INFILTRATION REQUIREMENT IS NEEDED SEE SHEET 5	DESIGN PRESSURE RATING, PSF: WHERE WATER INFILTRATION REQUIREMENT IS NOT NEEDED SEE SHEET 6
5	±70	±70

CONCEALED VERTICAL ROD EXIT DEVICE

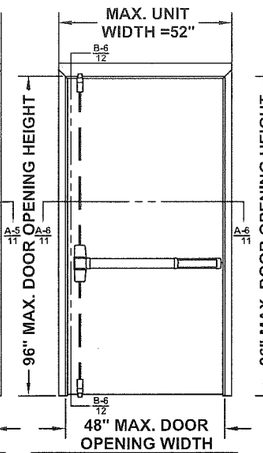

CONFIG.	DESIGN PRESSURE RATING, PSF: WHERE WATER INFILTRATION REQUIREMENT IS NEEDED SEE SHEET 5	DESIGN PRESSURE RATING, PSF: WHERE WATER INFILTRATION REQUIREMENT IS NOT NEEDED SEE SHEET 6
6	±70	±70

THREE-POINT LATCHING EXIT DEVICE

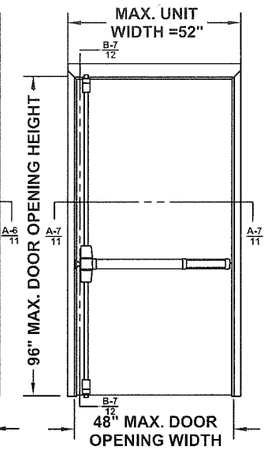

CONFIG.	DESIGN PRESSURE RATING, PSF: WHERE WATER INFILTRATION REQUIREMENT IS NEEDED SEE SHEET 5	DESIGN PRESSURE RATING, PSF: WHERE WATER INFILTRATION REQUIREMENT IS NOT NEEDED SEE SHEET 6
7	±70	±70

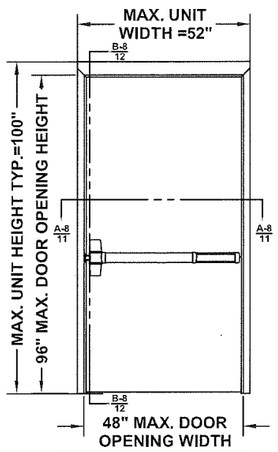

CONFIG.	DESIGN PRESSURE RATING, PSF: WHERE WATER INFILTRATION REQUIREMENT IS NEEDED SEE SHEET 5	DESIGN PRESSURE RATING, PSF: WHERE WATER INFILTRATION REQUIREMENT IS NOT NEEDED SEE SHEET 6
8	±70	±70

RIM EXIT DEVICE

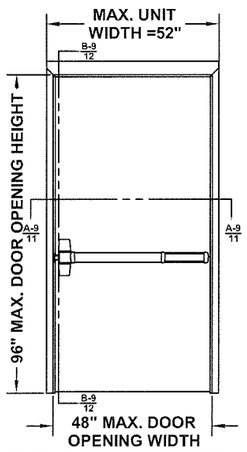

CONFIG.	DESIGN PRESSURE RATING, PSF: WHERE WATER INFILTRATION REQUIREMENT IS NEEDED SEE SHEET 5	DESIGN PRESSURE RATING, PSF: WHERE WATER INFILTRATION REQUIREMENT IS NOT NEEDED SEE SHEET 6
9	±75	±100

RIM EXIT DEVICE

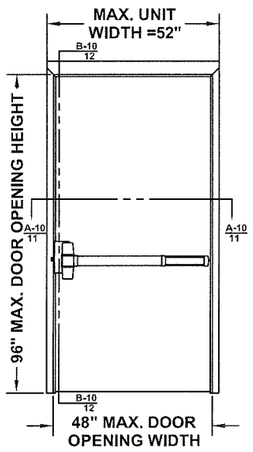

CONFIG.	DESIGN PRESSURE RATING, PSF: WHERE WATER INFILTRATION REQUIREMENT IS NEEDED SEE SHEET 5	DESIGN PRESSURE RATING, PSF: WHERE WATER INFILTRATION REQUIREMENT IS NOT NEEDED SEE SHEET 6
10	±70	±70

MORTISE EXIT DEVICE

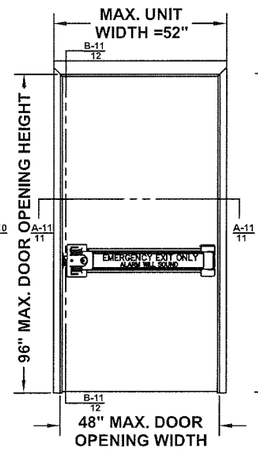

CONFIG.	DESIGN PRESSURE RATING, PSF: WHERE WATER INFILTRATION REQUIREMENT IS NEEDED SEE SHEET 5	DESIGN PRESSURE RATING, PSF: WHERE WATER INFILTRATION REQUIREMENT IS NOT NEEDED SEE SHEET 6
11	±55	±55

EXIT ALARM LOCK

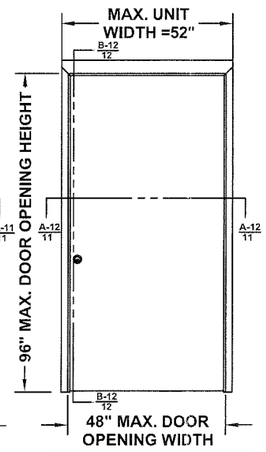

CONFIG.	DESIGN PRESSURE RATING, PSF: WHERE WATER INFILTRATION REQUIREMENT IS NEEDED SEE SHEET 5	DESIGN PRESSURE RATING, PSF: WHERE WATER INFILTRATION REQUIREMENT IS NOT NEEDED SEE SHEET 6
12	±60	±60

CYLINDRICAL DEADLOCK

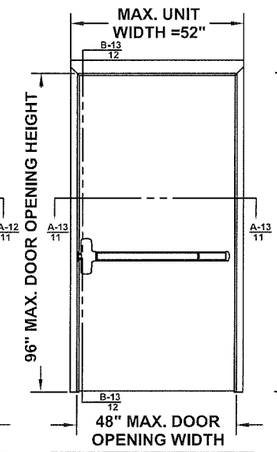

CONFIG.	DESIGN PRESSURE RATING, PSF: WHERE WATER INFILTRATION REQUIREMENT IS NEEDED SEE SHEET 5	DESIGN PRESSURE RATING, PSF: WHERE WATER INFILTRATION REQUIREMENT IS NOT NEEDED SEE SHEET 6
13	+70/-55	+70/-55

RIM EXIT DEVICE

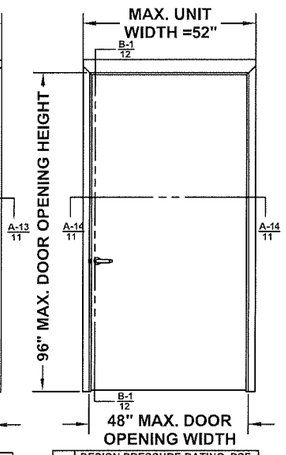

CONFIG.	DESIGN PRESSURE RATING, PSF: WHERE WATER INFILTRATION REQUIREMENT IS NEEDED SEE SHEET 5	DESIGN PRESSURE RATING, PSF: WHERE WATER INFILTRATION REQUIREMENT IS NOT NEEDED SEE SHEET 6
14	±60	±60

MORTISE LOCKSET WITHOUT DEADBOLT

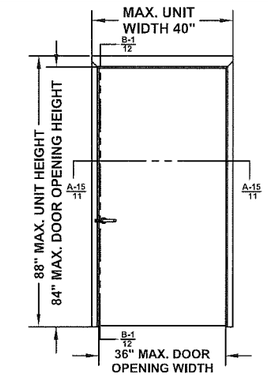

CONFIG.	DESIGN PRESSURE RATING, PSF: WHERE WATER INFILTRATION REQUIREMENT IS NEEDED SEE SHEET 5	DESIGN PRESSURE RATING, PSF: WHERE WATER INFILTRATION REQUIREMENT IS NOT NEEDED SEE SHEET 6
15	±75	±75

MORTISE LOCKSET WITHOUT DEADBOLT

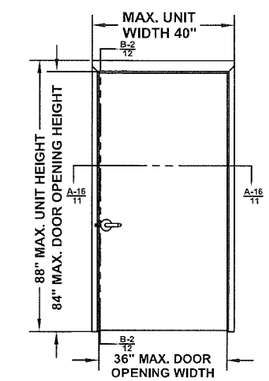

CONFIG.	DESIGN PRESSURE RATING, PSF: WHERE WATER INFILTRATION REQUIREMENT IS NEEDED SEE SHEET 5	DESIGN PRESSURE RATING, PSF: WHERE WATER INFILTRATION REQUIREMENT IS NOT NEEDED SEE SHEET 6
16	±75	±75

CYLINDRICAL LOCKSET WITH 1/2" THROW LATCH

REVISIONS

LTR	DESCRIPTION		DATE	APPROVED
A	APPROVAL DWG	YMF	05/20/07	
D	REVISED DWG	YMF	01/04/08	
E	REVISED DWG	YMF	03/31/08	
F	REVISED DWG	YMF	06/02/08	
G	REVISED DWG	YMF	01/20/10	
H	REVISED DWG	YMF	04/07/10	
J	REVISED NAME	JPD	11/01/13	
K	REVISED DWG	JPD	02/01/15	
L	REVISED DWG	JPD	05/05/15	
M	ENGINEER CHANGE	LA	02/16/17	

NOTE:
SEE SHEETS 5 & 6 FOR THRESHOLD TYPES, WEATHERSTRIP COMPONENTS, DOOR SIZE, AND DP LIMITATIONS.

HERMES F. NORERO
LICENSE
No. 73778
STATE OF
FLORIDA
PROFESSIONAL ENGINEER
HERMES F. NORERO P.E.
FLORIDA P.E. NO. 73778
BUILDING PROPS, INC.
308 S. DANIA BEACH BLVD. #338
DANIA BEACH, FL 33004
FBPE CERT. OF AUTHORIZATION NO. 29578

COMPLIANCE STATEMENT:

1. THESE PRODUCTS HAVE BEEN TESTED TO HVHZ PROTOCOLS TAS 201, 202 & 203-94 AND COMPLY WITH THE 2017 (6TH EDITION) FLORIDA BUILDING CODE.

NOTES:

1. INTERIOR VIEWS ARE SHOWN FOR ALL ELEVATIONS
2. SEE TABLE 1 ON SHEET 2 FOR HARDWARE APPLICATIONS AND LIMITATIONS
3. SEE SHEETS 3 & 14 FOR HINGE REQUIREMENTS AND OPTIONS
4. SEE SHEET 4 FOR ANCHORING TYPES AND LIMITATIONS. SEE SHEETS 3, 5 AND 6 FOR SILL INSTALLATION DETAILS & CAULKING.
5. SEE SHEET 5 TABLES 3.1 AND 3.2 FOR WATER RATED THRESHOLD AND WEATHERSTRIPPING INSTALLATION AND LIMITATIONS
6. SEE SHEET 6 TABLES 4.1 AND 4.2 FOR NON WATER RATED THRESHOLD AND WEATHERSTRIPPING INSTALLATION AND LIMITATIONS
7. ALL CONFIGURATIONS MEET LARGE AND SMALL MISSILE IMPACT REQUIREMENTS - LARGE MISSILE IMPACT AT (50 F/S)

PRODUCT REVISED
in complying with the Florida Building Code
Acceptance No. 17-0426.02
Expiration Date MAY 05, 2023
By Ishaq I. Chand
Miami-Dade Product Control

BEND RADIUS

THIRD ANGLE PROJECTION

DRAWN	YMF	DATE 05/20/07
CHECKED		
APPROVED		
ENG. APPVL	JPD	10/11/07

SCHLAGE LOCK COMPANY, LLC
6810 HILLSDALE COURT
INDIANAPOLIS, IN 46250

MANUFACTURING FACILITY:
STEELCRAFT
9017 BLUE ASH ROAD
CINCINNATI, OH 45242

TITLE: STEELCRAFT H SERIES SINGLE FLUSH OUTSWING COMMERCIAL STEEL DOORS WITH AND WITHOUT PANIC EXIT DEVICES

MIAMI-DADE COUNTY PRODUCT APPROVAL
FLUSH OUTSWING DOORS AND HARDWARE CONFIGURATIONS
COMMERCIAL DOOR OPENING SINGLE FLUSH DOORS.

SIZE	FLAT	DWG NO.	REV
		IRFS07	M

SCALE: NTS | AUTOCAD | SHEET 1 of 14

Door Configuration	Maximum Design Pressure, PSF		Maximum Door Opening Size, in.		Locking Hardware Description				Comments
	Positive	Negative	Width	Height	Hardware Family	Model/Series	Strike Models	Brand	
1	75	75	48	96	Mortise Lock	L/LV9400/AD/CO MD	10-072	Schlage	Functions with deadbolt, 3/4" min. throw latch & 1" min. throw deadbolt
	75	75	48	96	Mortise Lock	MA	ANSI	Falcon	
2	55	55	48	96	Cylindrical Lock	AL	10-025	Schlage	1/2" throw latch
3	65	65	48	96	Cylindrical Lock	D/ND/AD/CO CYL	10-025	Schlage	1/2" throw latch
4	75	75	48	96	Cylindrical Lock	D/ND/AD/CO CYL	10-025	Schlage	3/4" throw latch
	75	75	48	96	Cylindrical Lock	T	ANSI	Falcon	3/4" throw latch
5	70	70	48	96	Surface Vertical Rod Exit Device	98/9927(F)	299F/499F Top, 304L/248L4 Bottom	Von Duprin	
	70	70	48	96	Surface Vertical Rod Exit Device	(F)25-V	3788 Top, 2130 Bottom	Falcon	
6	70	70	48	96	Concealed Vertical Rod Exit Device	98/9947-F	338 Top, 385A or 304L Bottom	Von Duprin	
	70	70	48	96	Concealed Vertical Rod Exit Device	F-25-C	4188 Top, 2130 Bottom	Falcon	
7	70	70	48	96	Three-Point Latching Device	98/9957(F)	299F/499F Top/Middle, 304L/248L4 Bottom	Von Duprin	
8	70	70	48	96	Rim Exit Device	98/99(F)	299F/499F	Von Duprin	
	70	70	48	96	Rim Exit Device	88-F	268	Von Duprin	
9	75/100 SEE NOTE 2.	75/100 SEE NOTE 2.	48	96	Rim Exit Device	XP98/99(F)	909/954	Von Duprin	
10	70	70	48	96	Mortise Exit Device	98/9975(F)	575	Von Duprin	
	70	70	48	96	Mortise Exit Device	8875(F)	575	Von Duprin	
	70	70	48	96	Mortise Exit Device	(F)25-M	1279	Falcon	
11	55	55	48	96	Exit Alarm Lock	2670 GUARD-X	267	Von Duprin	
12	60	60	48	96	Cyl. Deadlock	B600/700/800	10-055	Schlage	1" min. throw deadbolt
13	70	55	48	96	Rim Exit Device	(F)25-R	299F/499F	Falcon	
14	60	60	48	96	Mortise Lock	L/LV9000/AD/CO MS	10-072	Schlage	Functions without deadbolt, 3/4" min. throw latch
15	75	75	36	84	Mortise Lock	L/LV9000/AD/CO MS	10-072	Schlage	Functions without deadbolt, 3/4" min. throw latch
	75	75	36	84	Mortise Lock	MA	ANSI	Falcon	
16	75	75	36	84	Cylindrical Lock	D/ND/AD/CO CYL	10-025	Schlage	1/2" throw latch
	75	75	36	84	Cylindrical Lock	T	ANSI	Falcon	

TABLE 1.

NOTES:

1. SEE SHEETS 8, 9 & 10 FOR LOCKING HARDWARE.
2. DOOR CONFIGURATION 9 IS RATED FOR MAXIMUM DESIGN PRESSURE UP TO ±75 PSF WITH ZERO INT'L THRESHOLD 11A OR FOR DOOR OPENINGS UP TO 3'-0"X7'-0" WITH NGP THRESHOLD 11B AND ±50 PSF FOR DOOR OPENINGS UP TO 4'-0"X8'-0" WITH NGP THRESHOLD 11B WHEN WATER IN FILTRATION REQUIREMENT IS NEEDED. SEE SHEET 5.

2.1 DOOR CONFIGURATION 9 IS RATED FOR A MAXIMUM DESIGN PRESSURE UP TO ±75 PSF WITH ZERO INT'L THRESHOLD OPTIONS AND UP TO ±100 PSF WITH THE NGP THRESHOLD OPTIONS WHEN WATER INFILTRATION REQUIREMENT IS NOT NEEDED. SEE SHEET 6

3. SCHLAGE AL-SERIES CYLINDRICAL LOCK, DOOR CONFIGURATION 2, IS LIMITED TO ±55 PSF MAXIMUM DESIGN PRESSURE

REVISIONS

LTR	DESCRIPTION			DATE	APPROVED
A	APPROVAL	DWG	YMF	05/20/07	
B	REVISED	DWG	RAP	10/11/07	
C	REVISED	DWG	RAP	12/10/07	
D	REVISED	DWG	YMF	01/04/08	
E	REVISED	DWG	YMF	03/31/08	
F	REVISED	DWG	YMF	06/02/08	
G	REVISED	DWG	YMF	03/03/09	
H	REVISED	DWG	YMF	04/07/10	
J	REVISED	NAME	JPD	11/01/13	
J	REVISED	NAME	JPD	11/01/13	
M	ENGINEER	CHANGE	LA	02/16/17	

PRODUCT REVISED
as complying with the Florida Building Code
Acceptance No 17-0426.02
Expiration Date 5/5/23
Miami-Dade Product Control

HERMES F. NORERO
LICENSE No. 73778
STATE OF FLORIDA
PROFESSIONAL ENGINEER
02-23-2018
HERMES F. NORERO, P.E.
FLORIDA P.E. NO. 73778
BUILDING DOORS, INC.
398 E. DANIA BEACH BLVD. #336
DANIA BEACH, FL 33004
CERTIFICATE OF AUTHORIZATION NO. 29576

BEND RADIUS

THIRD ANGLE PROJECTION

DRAWN	YMF	DATE 05/20/07
CHECKED		
APPROVED		
ENG. APPVL	JPD	10/11/07

SCHLAGE LOCK COMPANY, LLC
6810 HILLSDALE COURT
INDIANAPOLIS, IN 46250

MANUFACTURING FACILITY:
STEELCRAFT
9017 BLUE ASH ROAD
CINCINNATI, OH 45242

TITLE: STEELCRAFT H SERIES SINGLE FLUSH OUTSWING COMMERCIAL STEEL DOORS WITH AND WITHOUT PANIC EXIT DEVICES
MIAMI-DADE COUNTY PRODUCT APPROVAL
FLUSH OUTSWING DOORS AND HARDWARE CONFIGURATIONS
COMMERCIAL DOOR OPENING SINGLE FLUSH DOORS.

SIZE	FLAT	DWG NO.	REV
		IRFS07	M

SCALE: NTS | AUTOCAD | SHEET 2 of 14

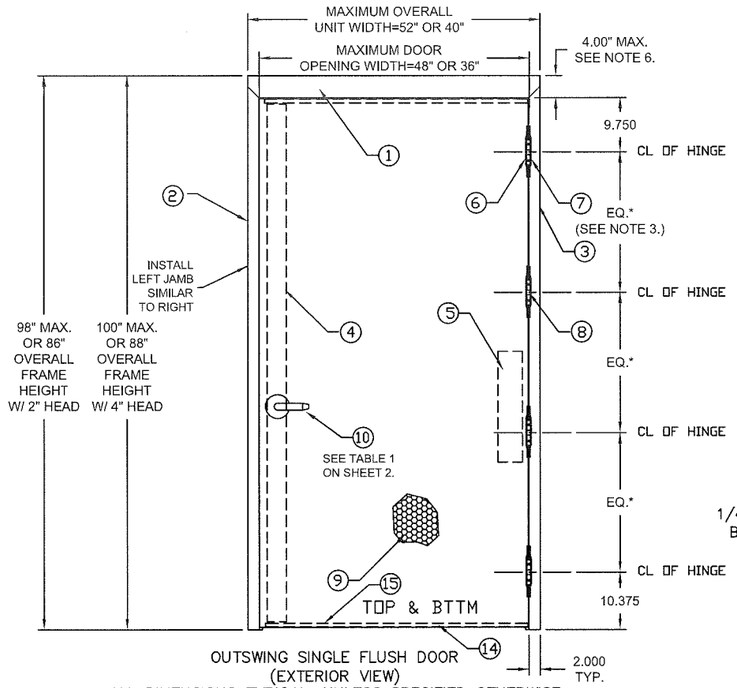

OUTSWING SINGLE FLUSH DOOR
(EXTERIOR VIEW)
ALL DIMENSIONS TYPICAL, UNLESS SPECIFIED OTHERWISE
(SEE ELEVATIONS SHEET 1)

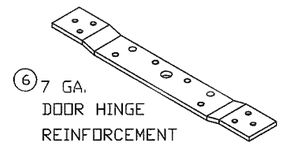

(6) 7 GA. DOOR HINGE REINFORCEMENT

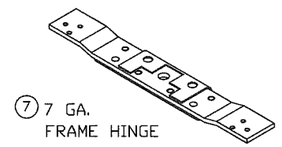

(7) 7 GA. FRAME HINGE REINFORCEMENT

SEE HINGE DETAIL SHEET 14

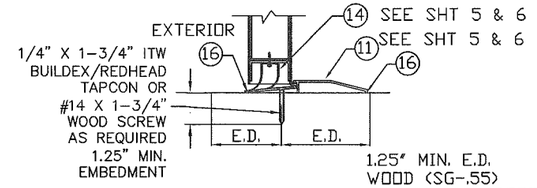

DETAIL TH (SIDEVIEW)
TYPICAL SILL DETAIL
WOOD OR CONCRETE SILL
E.D. = EDGE DISTANCE

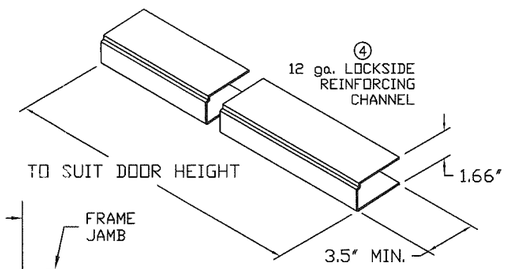

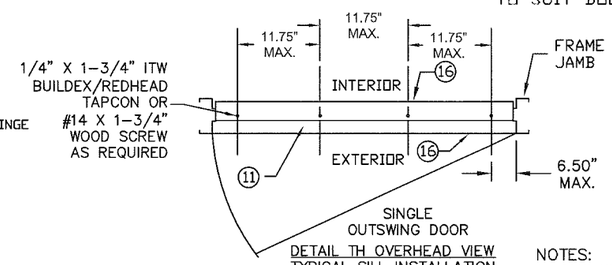

DETAIL TH OVERHEAD VIEW
TYPICAL SILL INSTALLATION

REVISIONS

LTR	DESCRIPTION			DATE	APPROVED
C	REVISED	DWGS.	RAP	12/10/07	
E	REVISED	DWGS.	YMF	03/24/08	
F	REVISED	DWGS.	YMF	06/02/08	
G	REVISED	DWGS.	YMF	03/03/09	
H	REVISED	DWGS.	YMF	04/07/10	
J	REVISED	NAME	JPD	11/01/13	
K	REVISED	DWG	JPD	02/01/15	
L	REVISED	DWG	JPD	02/01/15	
M	ENGINEER	CHANGE	LA	02/16/17	

TABLE 2.

	QUANTITY	DESCRIPTION	MATERIAL	SIZE
1	1	HEAD SEE SHT 7 ASTM A366	.053" MIN. STL	MAX. 52"
2	1	STRIKE JAMB SEE SHT. 7 ASTM A366	.053" MIN. STL	MAX. 100"
3	1	HINGE JAMB SEE SHT 7 ASTM A366	.053" MIN. STL	MAX. 100"
4	1	LOCK SIDE REINFORCEMENT CHANNEL	.093" MIN. STL	3.5 X 93.44 MAX
5	1	HINGE SIDE PANIC REINFORCEMENT	.067" MIN. STL	MAX. 20"
6	NOTE 3.	HINGE REINFORCEMENT DOOR ASTM A621	.167" MIN. STL.	1.23" X 9.19" MIN.
7	NOTE 3.	HINGE REINFORCEMENT FRAME ASTM A621	.167" MIN. STL.	1.5" X 9.187" MIN.
8	NOTE 3.	4.5" X 4.5" BUTT HINGES	.134" MIN. STL.	(8) #12-24 MS PER HINGE
		OPTIONAL CONTINUOUS HINGE	.075" MIN. STL/.110 ALUM	MAX. 95"
9	1	CORE MATERIAL (SHT. 13):	D) HONEYCOMB C) STEEL STIFFENED A/F) POLYSTYRENE B/F) POLYURETHANE/POLYISOCYANURATE E) MINERAL BOARD TEMPERATURE RISE CORE	
10	1	LOCKING HARDWARE - SEE SHEET 2, TABLE 1		
11	1	THRESHOLD SILL W/BUMPER GASKET		
		11A) 566 ZERO SEE SHT. 5 WATER RATED & 6 NON-WATER	.125" ALUM. 6063 T5	5.0"X0.5"X48"MAX.
		11B) 950 NGP SEE SHT. 5 WATER RATED & 6 NON-WATER	.078" ALUM. 6063 T5	
		11C) 65 ZERO SEE SHT. 6 NON-WATER RATED	.125" ALUM. 6063 T5	
		11D) 568 ZERO SEE SHT. 6 NON-WATER RATED	.125" ALUM. 6063 T5	6.0"X0.5"X48"MAX.
12	NOTE 2.	JAMB ANCHOR ASTM A924	SEE SHEET 4	
13	SEE SHEET 6	13A) PS074 DOOR SEAL STEELCRAFT	TPE	MAX. 20"
		13B)188S, 13C)117S, 13D)8144S, 13E)8150S DOOR SEAL ZERO	SILICONE	
14	1	FAS-SEAL DOOR SWEEP SEE SHEETS 5 & 6	TPE	MAX. 48"
15	2	END CHANNEL ASTM A924 (14 GA - INVERTED)	.067" MIN. STEEL	.69" X 1.66" X 48" MAX.
16	AS NEEDED	CAULK - BUTYL RUBBER OR 100% SILICONE	SEE SHEETS 5 & 6	
17	1	DOOR SLAB (16 OR 14 GA)	SEE SHEET 7	4' X 8' MAX.
18	1	18A 188S DOOR SEAL BY ZERO INT'L	SILICONE SEE SHEET 5	MAX. 20"
		18B PS074 DOOR SEAL BY STEELCRAFT	TPE SEE SHEET 5	
19	2	202N DOOR SEAL BY NGP	TPE SEE SHEET 5	MAX. 96"
20	1	20A 139 DOOR SWEEP BY ZERO INT'L	SEE SHEET 5	MAX. 48"
		20B 328 DOOR SWEEP BY ZERO INT'L		
		20C 200N DOOR SWEEP BY NGP		
21	3	21A 475 ADJUSTABLE SEAL BY ZERO INT'L	TPE SEE SHEET 5	MAX. 96"
	1	21B 170N ADJUSTABLE SEAL BY NGP		
22	1	22A 142 RAIN DRIP BY ZERO INT'L	SEE SHEET 5	MAX. 52"
		22B 11 RAIN DRIP BY ZERO INT'L		
		22C 16A RAIN DRIP BY NGP		
23	1	TOP CAP GALV. A60 ASTM A924	.020" MIN. STL	0.5" X 1.76" X 48" MAX.
24	1	IVES 698/U698 DOOR VIEWER	BRASS	

NOTES:
1. ANCHOR REQUIREMENTS:
   SEE SHEET 4 FOR APPROVED ANCHORS AND INSTALLATION.
2. HINGE REQUIREMENTS: 4.5" STD WT. MIN.
   FOR DOOR OPENING UP TO 90" HIGH – MIN (3) HINGES
   FOR DOOR OPENING OVER 90" – 96" HIGH – MIN (4) HINGES
   STD LOCATIONS: 9.75" FROM RABBET IN HEAD TO CL OF TOP HINGE
   10.38" FROM FLOOR TO CL OF BOTTOM HINGE, EQUALLY SPACED
   IN BETWEEN. HINGE LOCATIONS MAY VARY, MAX SPACING DO NOT EXCEED 35.5"
   SEE SHEET 14 FOR APPROVED CONTINUOUS HINGE MODELS
3. SEE SHEETS 1, 2 & 3 FOR AVAILABLE STANDARD OPENING SIZES AND SPECIFICATIONS.
4. HARDWARE INSTALLATION AS PER MANUFACTURER'S INSTRUCTIONS.
5. 4" FACE FRAME HEAD IS AVAILABLE. SEE SHEET 4
6. APPLY CAULK TO FULL LENGTH OF SILL AND ENTIRE PERIMETER OF FRAME. SEE SHEETS 5 & 6
7. WEATHERSTRIPPING:
   – WHEN WATER INFILTRATION IS REQUIRED INSTALL PER SHEET 5. (ZERO INTL 566 VS NGP 950)
   – WHEN WATER INFILTRATION IS NOT REQUIRED – INSTALL PER SHEET 6. (ZERO INTL 566, 65 & 568 VS NGP 950)
8. SEE SHEET 11 FOR HORIZONTAL CROSS SECTION A–A, SEE SHEET 12 FOR VERTICAL CROSS SECTION B–B.
9. TYPICAL SILL INSTALLATION SHALL BE ANCHORED PER OVERHEAD AND SIDEVIEW VIEW TH DETAILS ON THIS SHEET.
10. ELECTRICAL INSTALLATION AND FIRE RATINGS ARE UNDER SEPARATE APPROVAL AND MUST BE REVIEWED BY CORRESPONDING AUTHORITY.
11. OPTIONAL POWER TRANSFERS, MONITORING SWITCHES, SUPPLEMENTAL MAGNETIC LOCKS MAY BE USED AS ALLOWED BY CODE AND IT DOES NOT EFFECT THE MECHANICAL PROPERTIES OF EXIT DEVICE OR LOCK AND/OR INHIBIT EGRESS; TO BE REVIEWED BY THE BUILDING OFFICIAL.

PRODUCT REVIEWED
as complying with the Florida Building Code
Acceptance No 17-0426.02
Expiration Date 5/5/23
Miami-Dade Product Control

HERMES F. NORERO
LICENSE No 73778
STATE OF FLORIDA
PROFESSIONAL ENGINEER
HERMES F. NORERO, P.E.
FLORIDA P.E. NO. 73778
BUILDING DROPS, INC.
3305 DANIA BEACH BLVD. #338
DANIA BEACH, FL 33004
FBPE CERT. OF AUTHORIZATION NO. 29576

BEND RADIUS

THIRD ANGLE PROJECTION

DRAWN YMF	DATE 05/20/07
CHECKED	
APPROVED	
ENG. APPVL JPD	10/11/07

SCHLAGE LOCK COMPANY, LLC
6810 HILLSDALE COURT
INDIANAPOLIS, IN 46250

MANUFACTURING FACILITY:
STEELCRAFT
9017 BLUE ASH ROAD
CINCINNATI, OH 45242

TITLE: STEELCRAFT H SERIES SINGLE FLUSH OUTSWING COMMERCIAL STEEL DOORS WITH AND WITHOUT PANIC EXIT DEVICES

MIAMI–DADE COUNTY PRODUCT APPROVAL
H–SERIES FLUSH SINGLE DOORS (OUTSWING)

SIZE	FLAT	DWG NO.	REV
		IRFS07	M
SCALE: NTS	AUTOCAD		SHEET 3 of 14

A WIRE OR T MASONRY ANCHOR INTO GROUT FILLED FRAME & BLOCK WALL (UP TO 100 PSF)

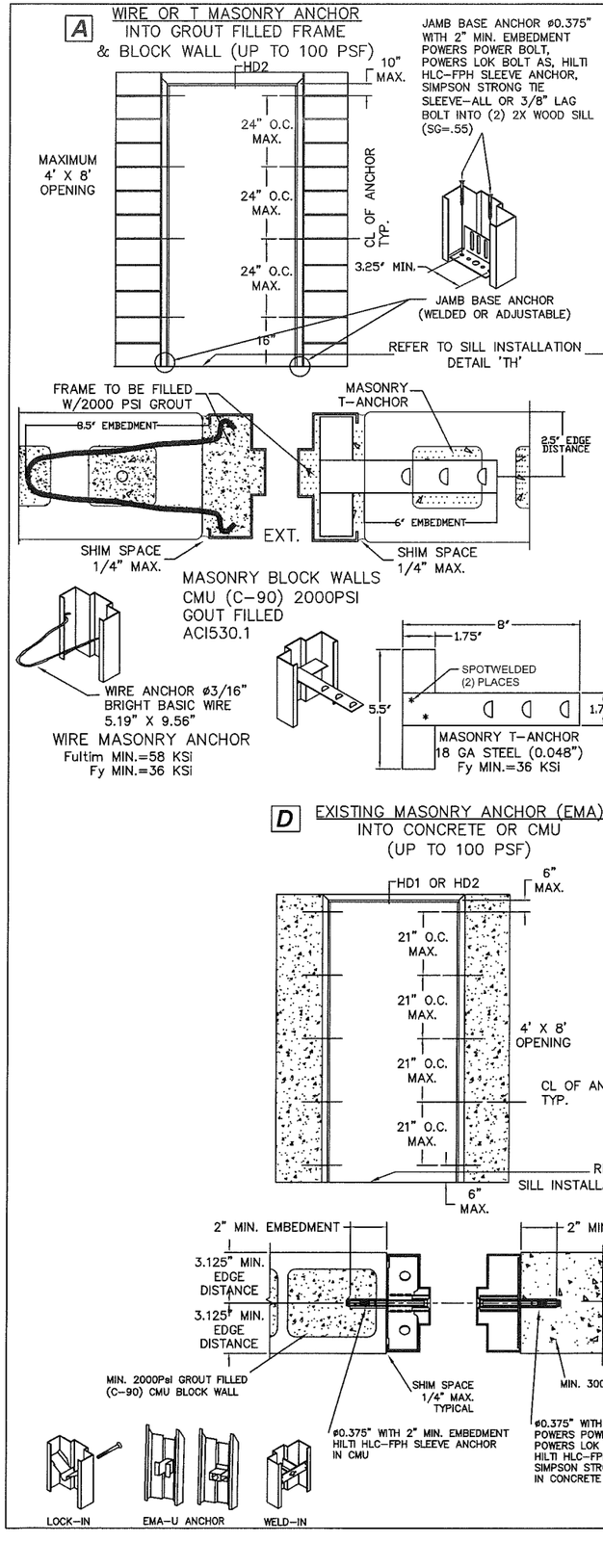

B WOOD STUD ANCHOR (UP TO 100 PSF)

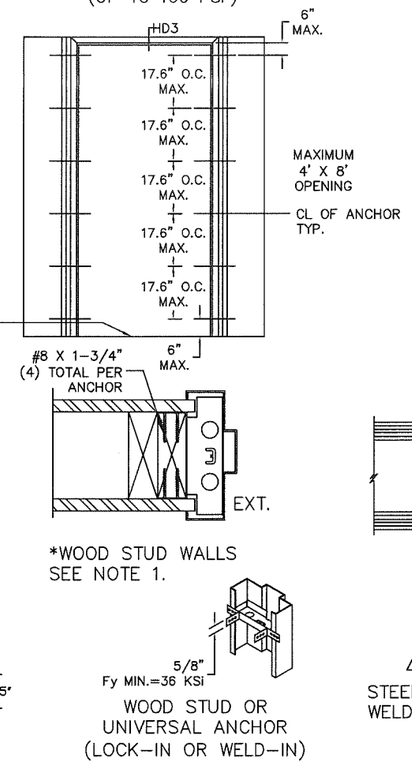

C STEEL STUD ANCHOR (UP TO 100 PSF)

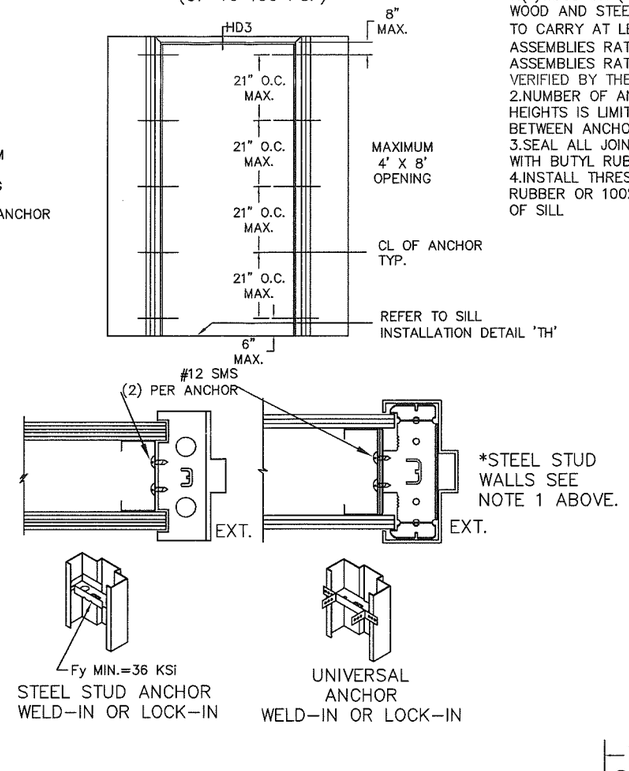

NOTES:
1.(*)WOOD OR (*)STEEL STRUCTURAL MEMBERS OF WOOD AND STEEL-STUD WALLS MUST BE DESIGNED TO CARRY AT LEAST 312 #/FT. LOAD FOR ASSEMBLIES RATED @75 PSF,AND 416#/FT. FOR ASSEMBLIES RATED @100 PSF, WHICH SHOULD BE VERIFIED BY THE APPROPRIATE OFFICIAL.
2.NUMBER OF ANCHORS FOR VARIOUS OPENING HEIGHTS IS LIMITED BY MAXIMUM DISTANCE BETWEEN ANCHORS, SHOWN ON THIS SHEET.
3.SEAL ALL JOINTS WHERE FRAME MEETS WALL WITH BUTYL RUBBER OR 100% SILICONE CAULK
4.INSTALL THRESHOLD INTO BEAD OF BUTYL RUBBER OR 100% SILICONE CAULK FULL LENGTH OF SILL

REVISIONS

LTR	DESCRIPTION			DATE	APPROVED
A	APPROVAL	DWG	YMF	05/20/07	
D	REVISED	DWG	YMF	01/04/08	
F	REVISED	DWG	YMF	06/02/08	
G	REVISED	DWG	YMF	03/03/09	
H	REVISED	DWG	YMF	04/07/10	
J	REVISED	NAME	JPD	11/01/13	
K	REVISED	DWG	JPD	02/01/15	
L	REVISED	DWG	JPD	05/05/15	
M	ENGINEER	CHANGE	LA	02/16/17	

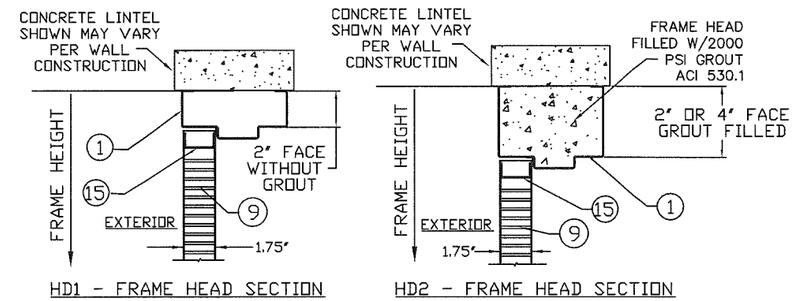

HD1 - FRAME HEAD SECTION

HD2 - FRAME HEAD SECTION

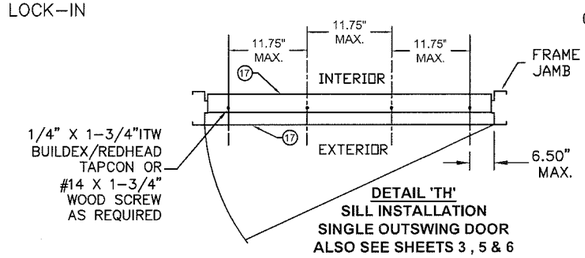

DETAIL 'TH'
SILL INSTALLATION
SINGLE OUTSWING DOOR
ALSO SEE SHEETS 3 , 5 & 6

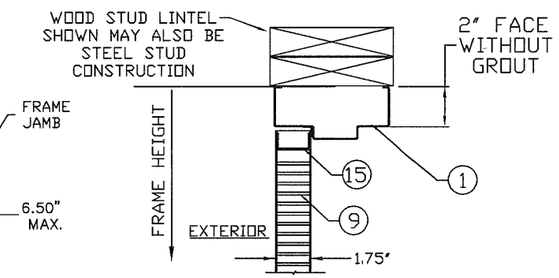

HD3 - FRAME HEAD SECTION

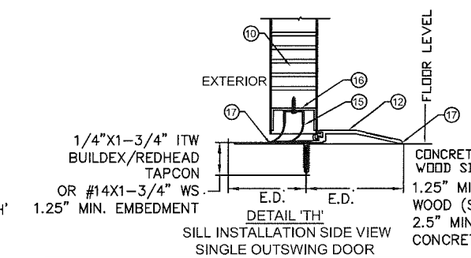

DETAIL 'TH'
SILL INSTALLATION SIDE VIEW
SINGLE OUTSWING DOOR

PRODUCT REVISED
as complying with the Florida Building Code
Acceptance No. 17-0426.02
Expiration Date 5/8/23
By
Miami-Dade Product Control

HERMES E. NORERO
LICENSE
No. 73778
STATE OF FLORIDA
PROFESSIONAL ENGINEER
8-26-2018
HERMES E. NORERO, P.E. NO.73778
BUILDING DROPS INC.
398 E. DANIA BEACH BLVD. #33
DANIA BEACH, FL 33004
FBPE CERT. OF AUTHORIZATION NO. 29538

D EXISTING MASONRY ANCHOR (EMA) INTO CONCRETE OR CMU (UP TO 100 PSF)

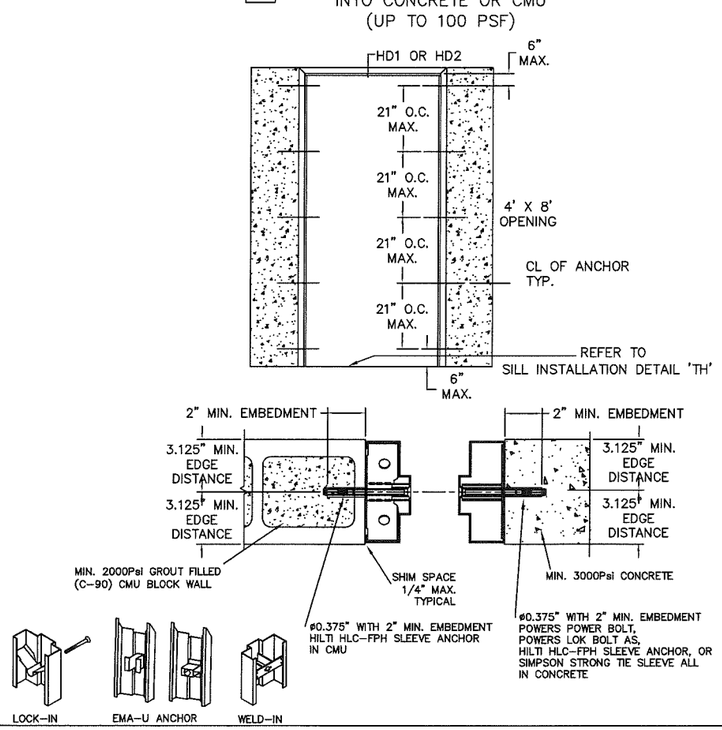

E EXISTING MASONRY ANCHOR (EMA) WITH LAG BOLT INTO WOOD STUD WALL (UP TO 100 PSF)

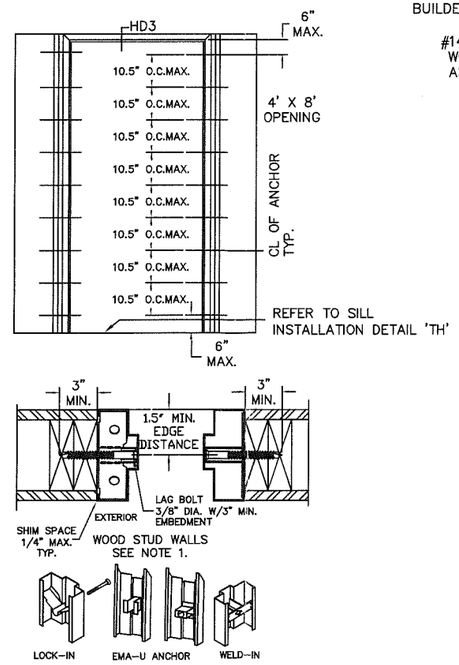

BEND RADIUS

THIRD ANGLE PROJECTION

DRAWN YMF	DATE 05/20/07
CHECKED	
APPROVED	
ENG. APPVL JPD	10/11/07

SCHLAGE LOCK COMPANY, LLC
6810 HILLSDALE COURT
INDIANAPOLIS, IN 46250

MANUFACRURING FACILITY:
STEELCRAFT
9017 BLUE ASH ROAD
CINCINNATI, OH 45242

TITLE: STEELCRAFT H SERIES SINGLE FLUSH OUTSWING COMMERCIAL STEEL DOORS WITH AND WITHOUT PANIC EXIT DEVICES

FRAME ANCHOR DETAILS & INSTALLATION CONDITIONS.

SIZE	FLAT	DWG NO.	REV
		IRFS07	M
SCALE: NTS	AUTOCAD		SHEET 4 of 14

TABLE 3.1 WATER RATED PERIMETER SEAL HARDWARE - ZERO INT'L THRESHOLD 566

ITEM NUMBER	MODEL No./ DESCRIPTION	MFG.
11A	566 THRESHOLD	ZERO INT'L
14	FAS-SEAL SWEEP	STEELCRAFT
15	END CHANNEL	STEELCRAFT
18A	188S DOOR SEAL	ZERO INT'L
20A	139 DOOR SWEEP	ZERO INT'L
20B	328 DOOR SWEEP	ZERO INT'L
21A	475 ADJUSTABLE SEAL	ZERO INT'L
22A	142 RAIN DRIP	ZERO INT'L
22B	11 RAIN DRIP	ZERO INT'L
23	DOOR TOP CAP	STEELCRAFT

ZERO INT'L 566 THRESHOLD GASKETING SYSTEM REQUIREMENTS FOR WATER INFILTRATION - MAXIMUM DESIGN PRESSURE RATING 75PSF - MAXIMUM DOOR SIZE 4'-0" X 8'-0" (SEE ELEVATIONS SHEET 1)

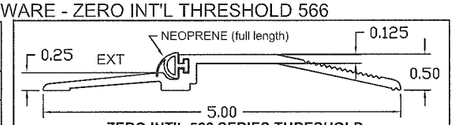

11A ZERO INT'L 566 SERIES THRESHOLD UP TO MAX. DESIGN PRESSURE +/- 75 PSF (SEE SHEET 1)

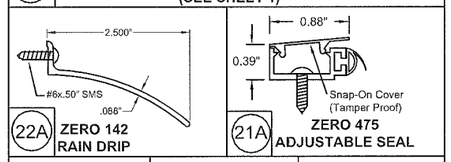

22A ZERO 142 RAIN DRIP

21A ZERO 475 ADJUSTABLE SEAL

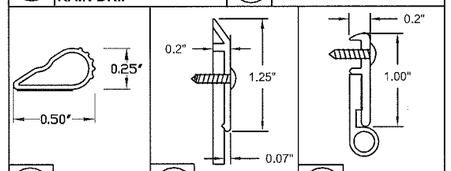

18A ZERO 188S DOOR SEAL

20A ZERO 139 DOOR SWEEP

20B ZERO 328 DOOR SWEEP

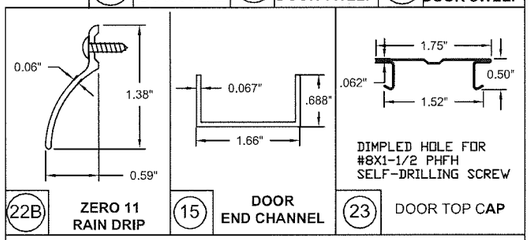

22B ZERO 11 RAIN DRIP

15 DOOR END CHANNEL

23 DOOR TOP CAP

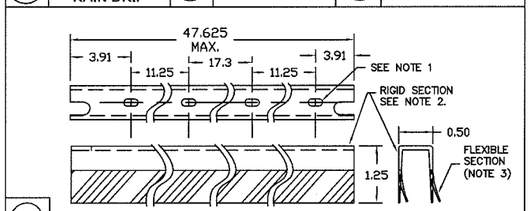

14 FAS-SEAL DOOR SWEEP

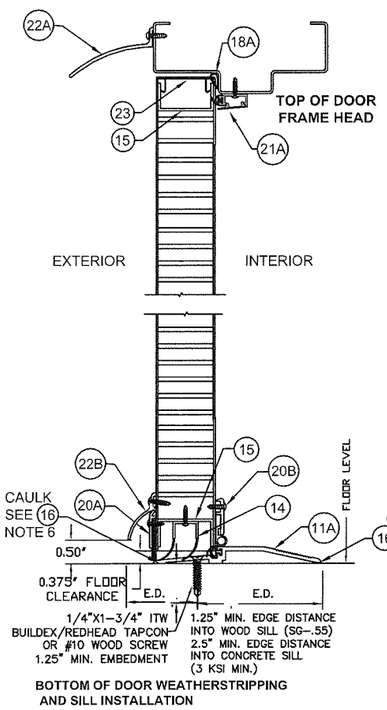

BOTTOM OF DOOR WEATHERSTRIPPING AND SILL INSTALLATION

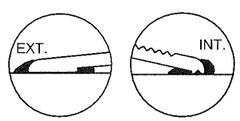

TYPICAL THRESHOLD SET INTO BEAD OF CAULK SEE NOTE 6

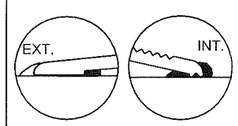

TYPICAL THRESHOLD SET INTO BEAD OF CAULK SEE NOTE 6

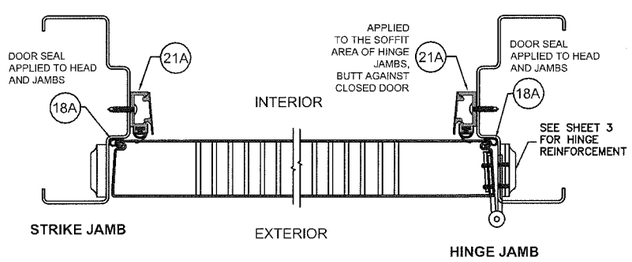

TABLE 3.2 WATER RATED PERIMETER SEAL HARDWARE - NGP THRESHOLD 950

ITEM NUMBER	MODEL No./ DESCRIPTION	MFG.
11B	950 THRESHOLD	NGP
14	FAS-SEAL SWEEP	STEELCRAFT
15	END CHANNEL	STEELCRAFT
18B	PS074 DOOR SEAL	STEELCRAFT
19	202N DOOR SEAL	NGP
20C	200N DOOR SWEEP	NGP
21B	170N ADJUSTABLE SEAL	NGP
22C	16A RAIN DRIP	NGP
23	DOOR TOP CAP	STEELCRAFT

NGP 950 THRESHOLD GASKETING SYSTEM REQUIREMENTS FOR WATER INFILTRATION - MAXIMUM DESIGN PRESSURE RATING 75PSF FOR MAXIMUM DOOR SIZE OF 3'-0" X 7'-0" MAXIMUM DESIGN PRESSURE 50 PSF FOR MAXIMUM DOOR SIZE OF 4'-0" X 8'-0" (SEE ELEVATIONS SHEET 1)

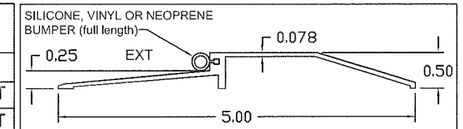

11B NATIONAL GUARD 950 SERIES THRESHOLD MAX. DESIGN PRESSURE +/- 50 PSF 4'-0"x8'-0" MAX. MAX. DESIGN PRESSURE +/- 75 PSF 3'-0"x7'-0" MAX. SEE SHEET 1

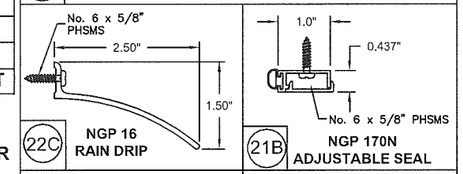

22C NGP 16 RAIN DRIP

21B NGP 170N ADJUSTABLE SEAL

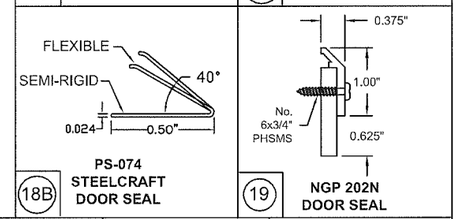

18B PS-074 STEELCRAFT DOOR SEAL

19 NGP 202N DOOR SEAL

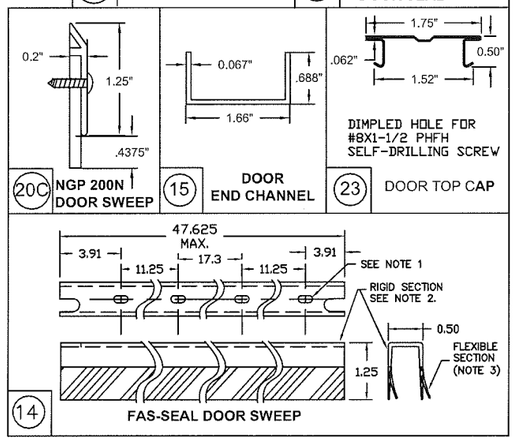

20C NGP 200N DOOR SWEEP

15 DOOR END CHANNEL

23 DOOR TOP CAP

14 FAS-SEAL DOOR SWEEP

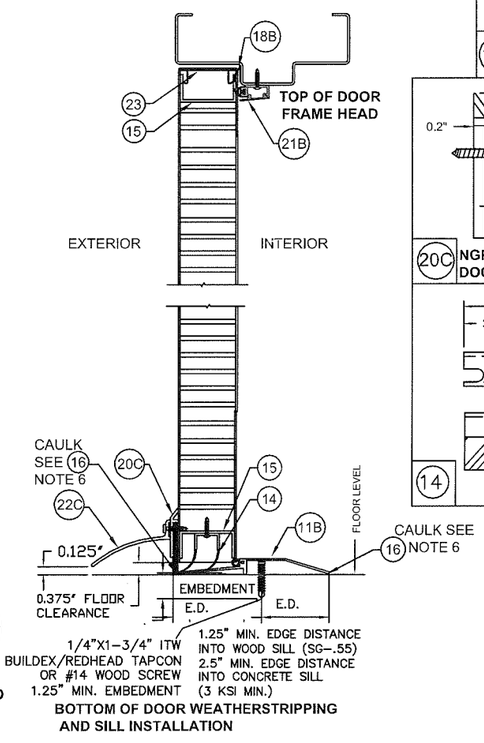

BOTTOM OF DOOR WEATHERSTRIPPING AND SILL INSTALLATION

TYPICAL THRESHOLD SET INTO BEAD OF CAULK SEE NOTE 6

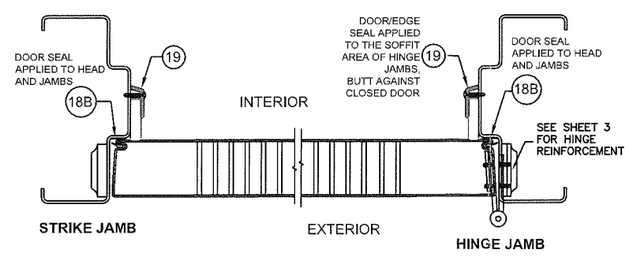

NOTES:
1. SLOT LOCATIONS MAY VARY WITH DIFFERENT DOOR WIDTH.
2. DOOR SWEEP RIGID SECTION IS MADE OF PRO-FAX #PD-199 POLYPROPYLENE HOMOPOLYMER.
3. DOOR SWEEP FLEXIBLE SECTION IS MADE OF SANTOPRENE #101-73
4. FAS-SEAL DOOR SWEEP (14), AND THRESHOLD (11A OR 11B) ARE REQUIRED FOR ALL INSTALLATIONS.
5. SEAL ALL JOINTS WHERE FRAME MEETS WALL WITH BUTYL RUBBER OR 100% SILICONE CAULK
6. INSTALL THRESHOLD INTO BEAD OF BUTYL RUBBER OR 100% SLICONE CAULK FULL LENGTH OF SILL

REVISIONS

LTR	DESCRIPTION			DATE	APPROVED
B	REVISED	DWG	RAP	10/11/07	
C	REVISED	DWG	RAP	12/10/07	
D	REVISED	DWG	YMF	01/07/07	
E	REVISED	DWG	YMF	04/03/08	
F	REVISED	DWG	YMF	06/03/08	
G	REVISED	DWG	YMF	03/03/09	
H	REVISED	DWG	YMF	04/07/10	
J	REVISED	NAME	JPD	11/01/13	
K	REVISED	DWG	JPD	02/01/15	
L	REVISED	DWG	JPD	05/05/15	
M	ENGINEER	CHANGE	LA	02/03/17	

PRODUCT REVISED
as complying with the Florida Building Code
Acceptance No. 17-0426.02
Expiration Date 5/15/23
By [signature]
Miami-Dade Product Control

HERMES F. NORERO
LICENSE
No. 73778
STATE OF
FLORIDA
PROFESSIONAL ENGINEER
03-29-2017
HERMES F. NORERO, P.E.
FLORIDA REG. NO. 73778
BUILDING DROPS, INC.
190 E. DANIA BEACH BLVD. #338
DANIA BEACH, FL 33004
FBPE CERT. OF AUTHORIZATION NO. 29578

BEND RADIUS

THIRD ANGLE PROJECTION

DRAWN YMF	DATE 05/20/07	SCHLAGE LOCK COMPANY, LLC 6810 HILLSDALE COURT INDIANAPOLIS, IN 46250
CHECKED		MANUFACTURING FACILITY: STEELCRAFT 9017 BLUE ASH ROAD CINCINNATI, OH 45242
APPROVED		TITLE: STEELCRAFT H SERIES SINGLE FLUSH OUTSWING COMMERCIAL STEEL DOORS WITH AND WITHOUT PANIC EXIT DEVICES
ENG. APPVL JPD	10/11/07	SINGLE FLUSH DOOR PERIMETER SEAL HARDWARE APPROVED WHERE WATER INFILTRATION IS REQUIRED

SIZE	FLAT	DWG NO.	REV
		IRFS07	M

SCALE: NTS | AUTOCAD | SHEET 5 of 14

TABLE 4.1 NON WATER RATED PERIMETER SEAL HARDWARE - ZERO INT'L THRESHOLDS

ITEM NUMBER	MODEL No./ DESCRIPTION		MFG.
11	12A	566 THRESHOLD	ZERO INT'L
	12C	65 THRESHOLD	ZERO INT'L
	12D	568 THRESHOLD	ZERO INT'L
13	14A	PS074 DOOR SEAL	STEELCRAFT
	14B	188S DOOR SEAL	ZERO INT'L
	14C	117S DOOR SEAL	ZERO INT'L
	14D	8144S DOOR SEAL	ZERO INT'L
	14E	8150S DOOR SEAL	ZERO INT'L
14		FAS-SEAL SWEEP	STEELCRAFT
15		END CHANNEL	STEELCRAFT

ZERO INT'L 566, 65 AND 568 THRESHOLD GASKETING SYSTEM REQUIREMENTS WHEN WATER INFILTRATION IS NOT REQUIRED MAXIMUM DESIGN PRESSURE RATING 75PSF - MAXIMUM DOOR SIZE 4'-0" X 8'-0" (SEE ELEVATIONS SHEET 1)

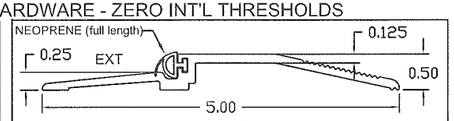

11A ZERO INT'L 566 SERIES THRESHOLD MAXIMUM DESIGN PRESSURE +/- 75 PSF (SEE SHEET 1)

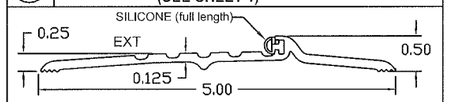

11C ZERO INT'L 65 SERIES THRESHOLD MAXIMUM DEISGN PRESSURE +/- 70 PSF (SEE SHEET 1)

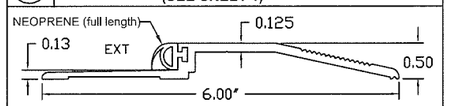

11D ZERO INT'L 568 SERIES THRESHOLD MAXIMUM DESIGN PRESSURE +/- 75 PSF (SEE SHEET 1)

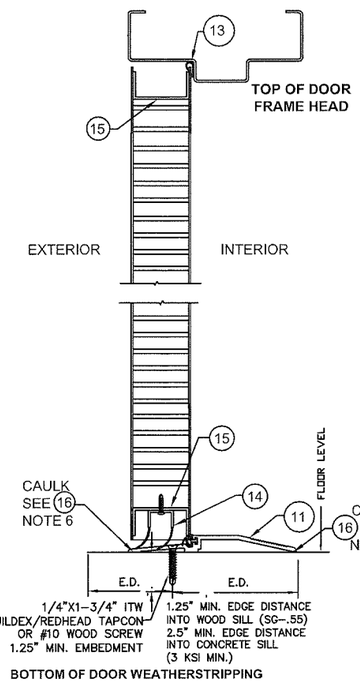

BOTTOM OF DOOR WEATHERSTRIPPING AND SILL INSTALLATION

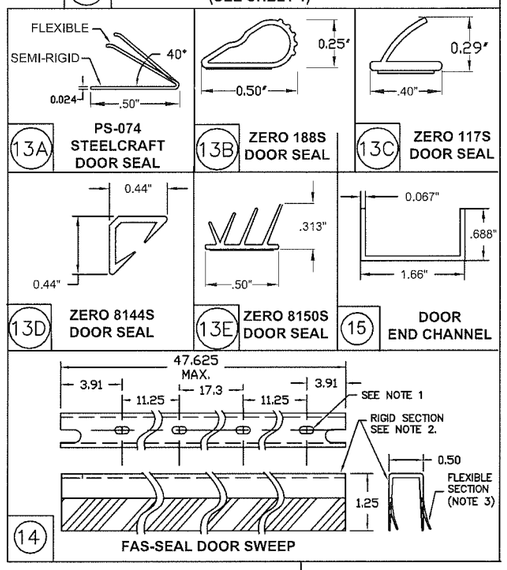

13A PS-074 STEELCRAFT DOOR SEAL; 13B ZERO 188S DOOR SEAL; 13C ZERO 117S DOOR SEAL; 13D ZERO 8144S DOOR SEAL; 13E ZERO 8150S DOOR SEAL; 15 DOOR END CHANNEL; 14 FAS-SEAL DOOR SWEEP

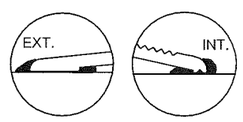

TYPICAL THRESHOLD SET INTO BEAD OF CAULK SEE NOTE 6

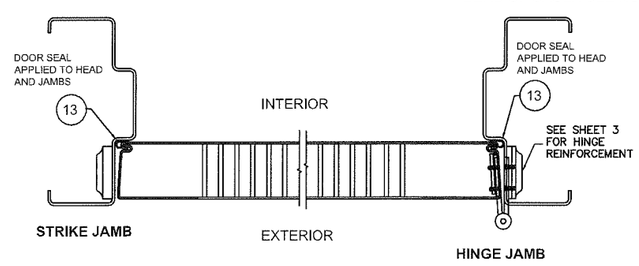

TABLE 4.2 NON WATER RATED PERIMETER SEAL HARDWARE - NGP THRESHOLD 950

ITEM NUMBER	MODEL No./ DESCRIPTION	MFG.
11B	950 THRESHOLD	NGP
13A	PS074 DOOR SEAL	STEELCRAFT
14	FAS-SEAL SWEEP	STEELCRAFT
15	END CHANNEL	STEELCRAFT

NGP 950 THRESHOLD GASKETING SYSTEM REQUIREMENTS WHEN WATER INFILTRATION IS NOT REQUIRED - MAXIMUM DESIGN PRESSURE 100 PSF FOR MAXIMUM DOOR SIZE OF 4'-0" X 8'-0" (SEE ELEVATIONS SHEET 1)

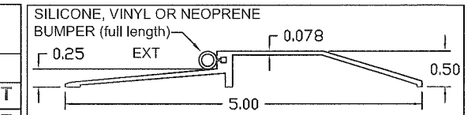

11B NATIONAL GUARD 950 SERIES THRESHOLD MAXIMUM DESIGN PRESSURE +/- 90 PSF (SEE SHEET1)

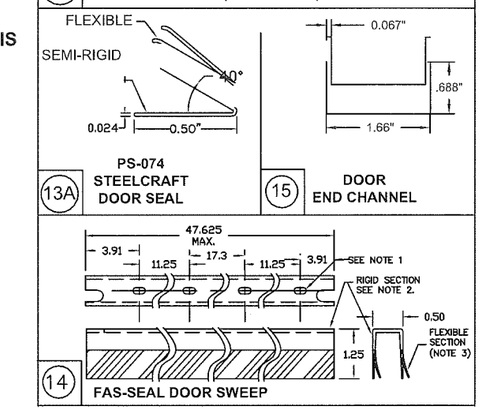

13A PS-074 STEELCRAFT DOOR SEAL; 15 DOOR END CHANNEL; 14 FAS-SEAL DOOR SWEEP

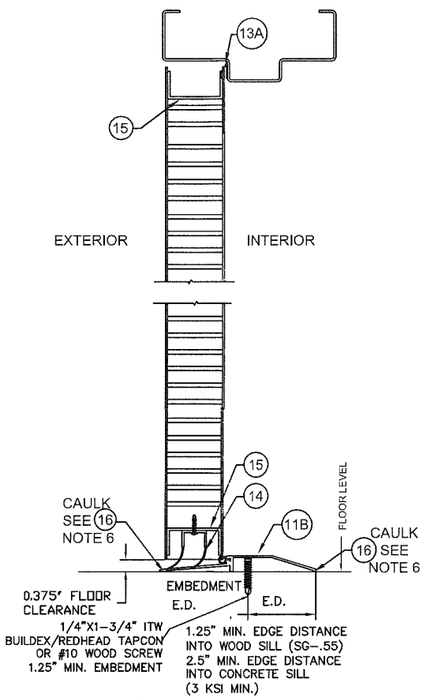

BOTTOM OF DOOR WEATHERSTRIPPING AND SILL INSTALLATION

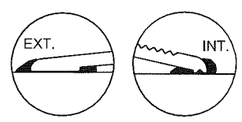

TYPICAL THRESHOLD SET INTO BEAD OF CAULK SEE NOTE 6

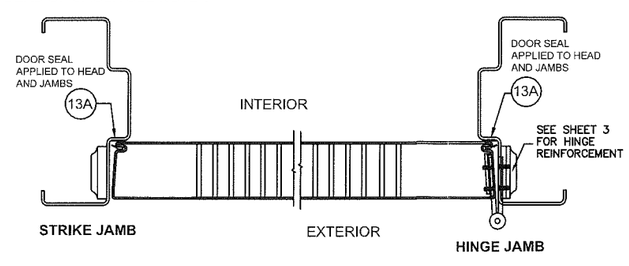

REVISIONS				
LTR	DESCRIPTION		DATE	APPROVED
B	REVISED DWG	RAP	10/11/07	
C	REVISED DWG	RAP	12/10/07	
D	REVISED DWG	YMF	01/07/07	
E	REVISED DWG	YMF	04/03/08	
F	REVISED DWG	YMF	06/03/08	
G	REVISED DWG	YMF	03/03/09	
H	REVISED DWG	YMF	04/07/10	
J	REVISED NAME	JPD	11/01/13	
K	REVISED DWG	JPD	02/01/15	
L	REVISED DWG	JPD	05/05/15	
M	ENGINEER CHANGE	LA	02/03/17	

PRODUCT REVISED
as complying with the Florida
building Code
Acceptance No 17-0426.02
Expiration Date 5/5/23
By [signature]
Miami-Dade Product Control

NOTES:
1. SLOT LOCATIONS MAY VARY WITH DIFFERENT DOOR WIDTH.
2. DOOR SWEEP RIGID SECTION IS MADE OF PRO-FAX #PD-199 POLYPROPYLENE HOMOPOLYMER.
3. DOOR SWEEP FLEXIBLE SECTION IS MADE OF SANTOPRENE #101-73
4. FAS-SEAL DOOR SWEEP (15), DOOR SEAL (13A, 13B, 13C, 13D, 13E) AND THRESHOLD (11A, 11B, 11C, 11D) AS APPLICABLE, ARE REQUIRED FOR ALL INSTALLATIONS.
5. SEAL ALL JOINTS WHERE FRAME MEETS WALL WITH BUTYL RUBBER OR 100% SILICONE CAULK
6. INSTALL THRESHOLD INTO BEAD OF BUTYL RUBBER OR 100% SILICONE CAULK FULL LENGTH OF SILL

HERMES F. NORERO LICENSE No 73778 STATE OF FLORIDA PROFESSIONAL ENGINEER
12-29-2018
HERMES F. NORERO P.E.
FLORIDA P.E. NO. 73778
BUILDING DROPS, INC.
398 E. DANIA BEACH BLVD. #339
DANIA BEACH, FL 33004
FBPE CERT. OF AUTHORIZATION NO. 28578

BEND RADIUS	SCHLAGE LOCK COMPANY, LLC 6810 HILLSDALE COURT INDIANAPOLIS, IN 46250	MANUFACTURING FACILTITY: STEELCRAFT 9017 BLUE ASH ROAD CINCINNATI, OH 45242	
THIRD ANGLE PROJECTION	TITLE: STEELCRAFT H SERIES SINGLE FLUSH OUTSWING COMMERCIAL STEEL DOORS WITH AND WITHOUT PANIC EXIT DEVICES		
DRAWN YMF / DATE 05/20/07	SINGLE FLUSH DOOR PERIMETER SEAL HARDWARE APPROVED WHERE WATER INFILTRATION IS NOT REQUIRED		
CHECKED			
APPROVED	SIZE: FLAT	DWG NO. IRFS07	REV M
ENG. APPVL JPD / 10/11/07	SCALE: NTS AUTOCAD		SHEET 6 of 14

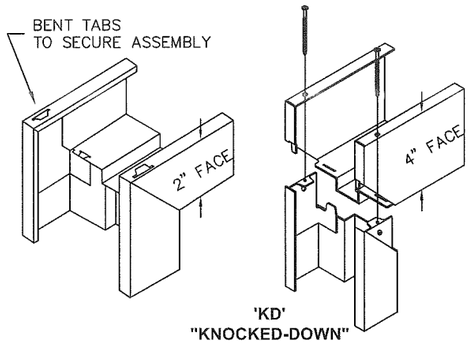

'KD'
"KNOCKED-DOWN"
ASSEMBLY

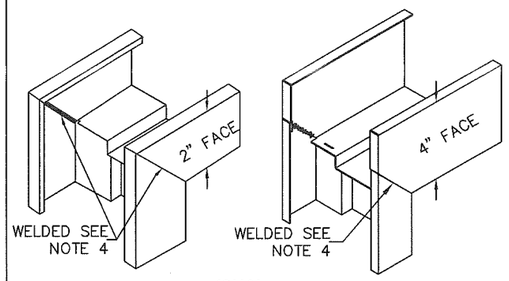

'SUA'
SET-UP AND ARC-WELDED
ASSEMBLY

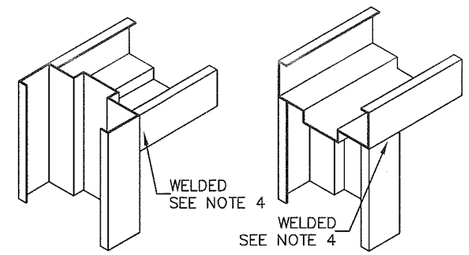

HEAD NOTCHED
AND BUTTED BETWEEN JAMBS

HEAD SITS ON TOP
OF NOTCHED JAMBS

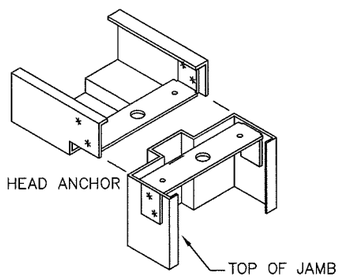

HEAD NOTCHED
AND BOLTED ON TOP OF JAMBS

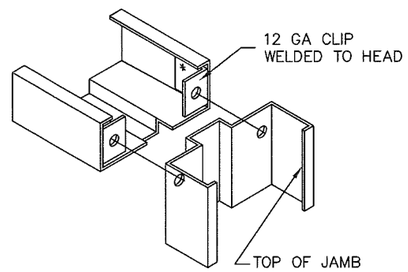

HEAD NOTCHED
AND BOLTED BETWEEN JAMBS

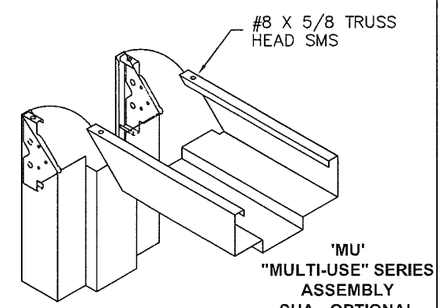

'MU'
"MULTI-USE" SERIES
ASSEMBLY
SUA - OPTIONAL

AVAILABLE DOOR PANEL CONFIGURATIONS

TYPICAL FRAME PROFILE
DOUBLE RABBET

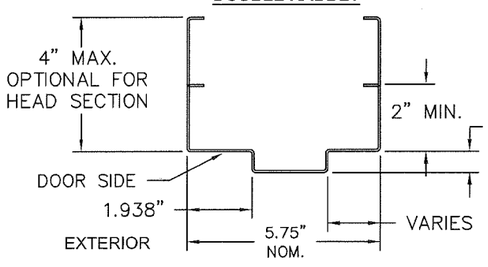

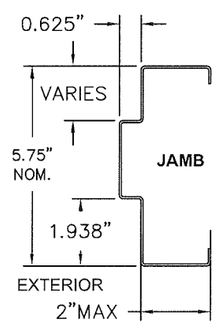

OPTIONAL FRAME PROFILE
SINGLE RABBET

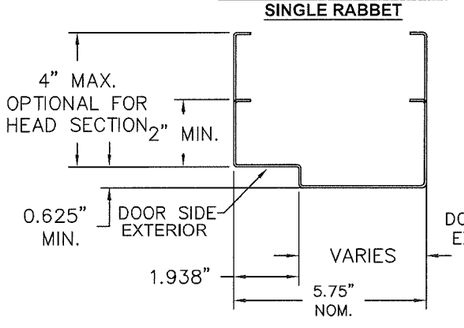

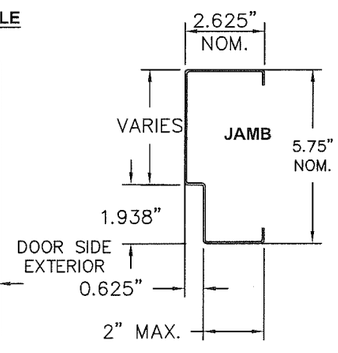

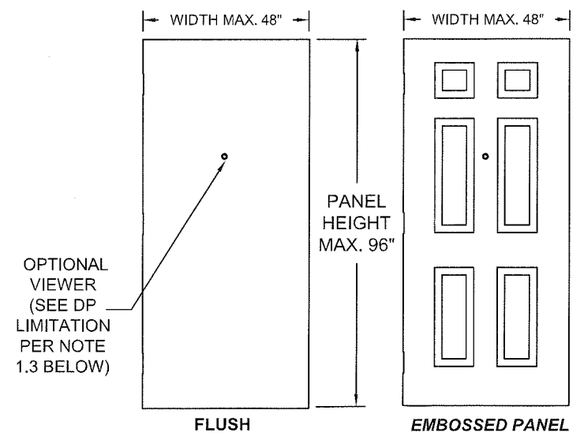

NOTES:
1. DOOR CONSTRUCTION
1.1. MINIMUM DOOR THICKNESS – 1 3/4"
1.2. DOOR SIZE MAY VARY, SUBJECTED TO COMPLIANCE WITH FLORIDA BUILDING CODE AND PRODUCT(DOOR, FRAME AND HARDWARE) AVAILABILITY FROM MANUFACTURER (SEE SHEET 2 FOR AVAILABLE HARDWARE)
1.3 DOOR VIEWERS ARE PERMITTED TO BE USED IN DOOR WITH A DESIGN PRESSURE OF +/–75PSF OR LESS. MAXIMUM 9/16" DIAMETER HOLE THROUGH DOOR FOR VIEWER INSTALLATION.
2. FRAME CONSTRUCTION
2.1 NOMINAL JAMB DEPTH – 5–3/4", STOP HEIGHT – 5/8"
2.2 FRAMES AVAILABLE AS FLUSH (F–SERIES) AND MULTI–USE (MU–SERIES) (SEE TABLE 6)
3. FOR DOOR/FRAME MATERIAL SPECIFICATIONS REFERENCE SEE TABLE 7.
4. CONTINUOUS BACK WELD WITH FULL PENETRATION TO FACE SEAM. GRIND, SMOOTH, PRIME, & PAINT. WELD CLSSIFICATION – E70XX

REVISIONS

LTR	DESCRIPTION			DATE	APPROVED
D	REVISED	DWG	YMF	01/08/08	
E	REVISED	DWG	YMF	04/08/08	
F	REVISED	DWG	YMF	06/03/08	
G	REVISED	DWG	YMF	03/03/09	
H	REVISED	DWG	YMF	04/07/10	
J	REVISED	NAME	JPD	11/01/13	
K	REVISED	NAME	JPD	02/01/15	
M	ENGINEER	CHANGE	LA	02/16/17	

TABLE 5. AVAILABLE STEELCRAFT DOOR CONFIGURATIONS

CORE MATERIAL PER SHT.4	MAXIMUM OPENING SIZE		SKIN MATERIAL	
	WIDTH	HEIGHT	DESCR.	GA./MIN. THK
HONEYCOMB POLYSTYRENE POLYURETHANE (POLYISOCYANURATE) TEMPERATURE RISE STEEL STIFFENED	VARIES SEE SHEET 2 TABLE 1		CRS GALV	16/.053" 14/.067"
HONEYCOMB POLYSTYRENE POLYURETHANE	VARIES SEE SHEET 2 TABLE 1		STAINLESS STEEL	16/.053"

TABLE 6. AVAILABLE STEELCRAFT FRAME CONFIGURATIONS

FRAME SERIES	JAMB DEPTH	MAX. OPENING SIZE		MATERIAL	
		WIDTH	HEIGHT	DESCR.	GA./MIN. THK
F	5.75" MIN.	VARIES SEE SHEET 2 TABLE 1		CRS/HRS GALV	16/.053" 14/.067" 12/.099"
				STAINLESS STEEL	16/.053"
MU	5.75" MIN.	VARIES SEE SHEET 2 TABLE 1		CRS/HRS GALV	16/.053" 14/.067"

TABLE 7. STEEL DOOR/FRAME MECHANICAL PROPERTIES

MATERIAL	ASTM REF.	YIELD KSi	TENSILE KSi
CRS	A366	MIN. 30.1	MIN. 44.7
HRS	A1011		
GALV: A60	A924		
SS: 304,316	A240	MIN. 31.2	MIN. 73.2

PRODUCT REVISED
in complying with the Florida
Building Code
Acceptance No. 17-0426.02
Expiration Date 5/5/23
By Shag Illanes
Miami-Dade Product Control

HERMES F. NORERO
LICENSE
No. 73778
STATE OF FLORIDA
3-29-2018
PROFESSIONAL ENGINEER
HERMES F. NORERO, P.E.
FLORIDA P.E. NO. 73778
BUILDING GROUPS, INC.
938 E. DANIA BEACH BLVD. #208
DANIA BEACH, FL 33004
FBPE CERT. OF AUTHORIZATION NO. 23578

BEND RADIUS

THIRD ANGLE PROJECTION

DRAWN YMF	DATE 05/20/07
CHECKED	
APPROVED	
ENG. APPVL JPD	10/11/07

SCHLAGE LOCK COMPANY, LLC
6810 HILLSDALE COURT
INDIANAPOLIS, IN 46250

MANUFACTURING FACILITY:
STEELCRAFT
9017 BLUE ASH ROAD
CINCINNATI, OH 45242

TITLE STEELCRAFT H SERIES SINGLE FLUSH OUTSWING COMMERCIAL STEEL DOORS WITH AND WITHOUT PANIC EXIT DEVICES
FRAME PROFILE, CORNER DETAILS AND DOOR FRAME MATERIAL, AND SIZE OPTIONS

SIZE	FLAT	DWG NO.	REV
		IRFS07	M

SCALE: NTS | AUTOCAD | SHEET 7 of 14

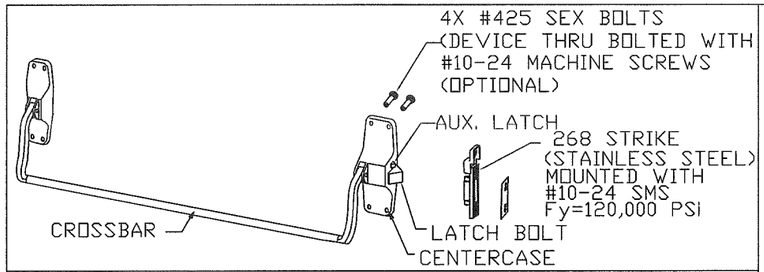

RIM EXIT DEVICE VON DUPRIN 88-F
USED IN **DOOR CONFIGURATION 8** (SEE SHT.1)

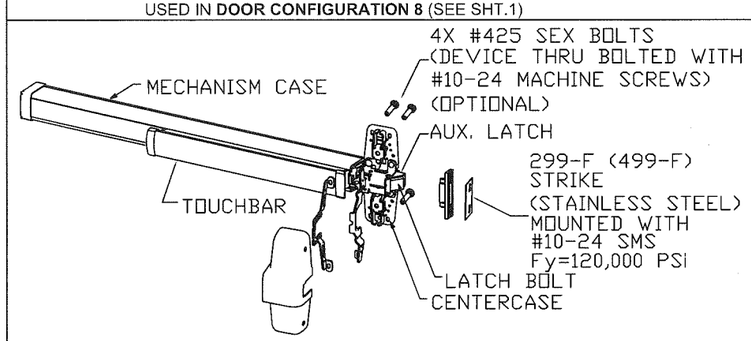

RIM EXIT DEVICE VON DUPRIN 98/99(F)
USED IN **DOOR CONFIGURATION 8** (SEE SHT.1)

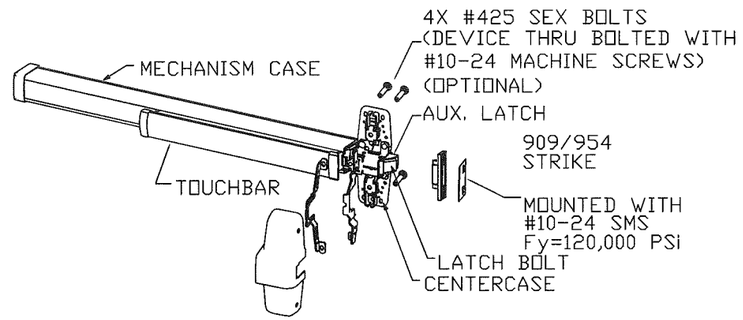

RIM EXIT DEVICE VON DUPRIN XP98/99(F)
USED IN **DOOR CONFIGURATION 9** (SEE SHT.1)

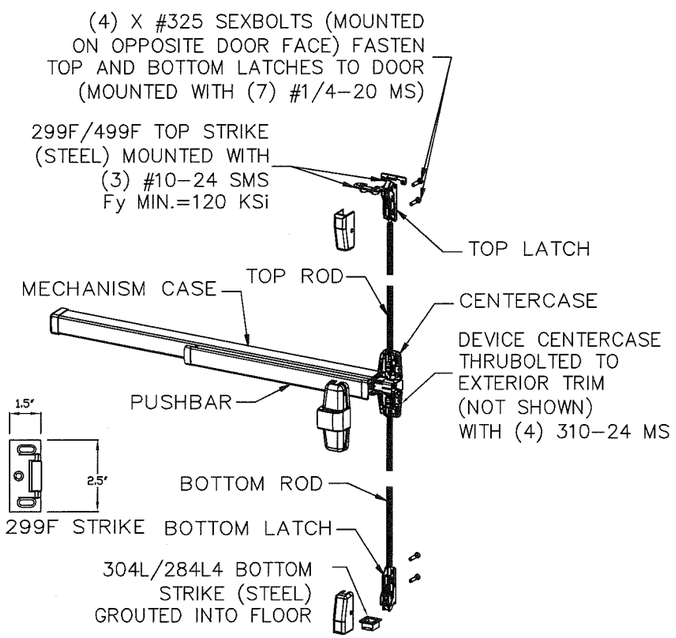

SURFACE VERTICAL ROD EXIT DEVICE VON DUPRIN 98/9927(F)
USED IN **DOOR CONFIGURATION 5** (SEE SHT.1)

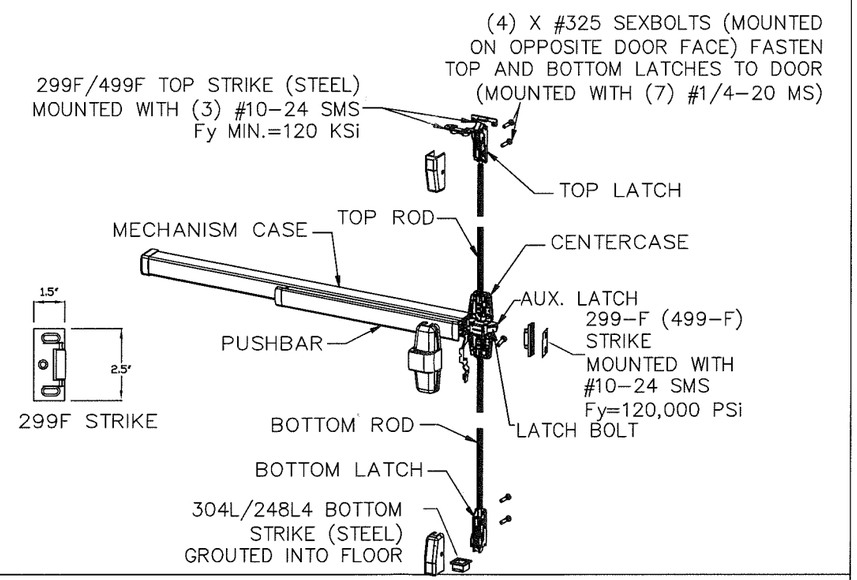

THREE-POINT EXIT DEVICE VON DUPRIN 98/9957(F)
USED IN **DOOR CONFIGURATION 7** (SEE SHT.1)

REVISIONS				
LTR	DESCRIPTION		DATE	APPROVED
A	APPROVAL DWG	YMF	05/20/07	
D	REVISED DWG	YMF	01/08/08	
F	REVISED DWG	YMF	06/03/08	
G	REVISED DWG	YMF	03/03/09	
H	REVISED DWG	YMF	04/07/10	
J	REVISED NAME	JPD	11/01/13	
K	REVISED DWG	JPD	02/01/15	
M	ENGINEER CHANGE	LA	02/16/17	

PRODUCT REVISED
as complying with the Florida
Building Code
Acceptance No 17-0426.02
Expiration Date 5/15/23
By Ishaq Chaudhry
Miami-Dade Product Control

HERMES F. MORERO
LICENSE
No. 73778
STATE OF
FLORIDA
PROFESSIONAL ENGINEER
3-29-2017
HERMES F. MORERO P.E.
FLORIDA P.E. NO.73778
BUILDING GROUPS, INC.
3948 S. OCEAN BEACH BLVD. #348
OCEAN BEACH, FL 33062
FBPE CERT. OF AUTHORIZATION NO. 29578

NOTES:
ELECTRIC/ELECTRONIC FUNCTION AND FIRE RATINGS ARE NOT PART OF THIS APPROVAL AND MUST BE REVIEWED BY AUTHORITY HAVING JURISDICTION

EXIT HARDWARE OPTIONS:
FOR 98/99 SERIES - E, RX, LX, SS, EL, QEL, CX, F, ALK
FOR XP98/99 SERIES - E, RX, LX, QEL, F
TRIMS: ALL APPLICABLE TRIMS AVAILABLE.
PN MODEL OFFERED.

BEND RADIUS

THIRD ANGLE PROJECTION

DRAWN	YMF	DATE	05/20/07
CHECKED		CDATE	
APPROVED		ADATE	
ENG. APPVL	JPD	EDATE	10/11/07

SCHLAGE LOCK COMPANY, LLC
6810 HILLSDALE COURT
INDIANAPOLIS, IN 46250

MANUFACTURING FACILITY:
STEELCRAFT
9017 BLUE ASH ROAD
CINCINNATI, OH 45242

TITLE: STEELCRAFT H SERIES SINGLE FLUSH OUTSWING COMMERCIAL STEEL DOORS WITH AND WITHOUT PANIC EXIT DEVICES

EXIT HARDWARE OPTIONS FOR FLUSH SINGLE DOORS

SIZE	FLAT	DWG NO.	IRFS07	REV
SCALE:	NTS	AUTOCAD		SHEET 8 of 14

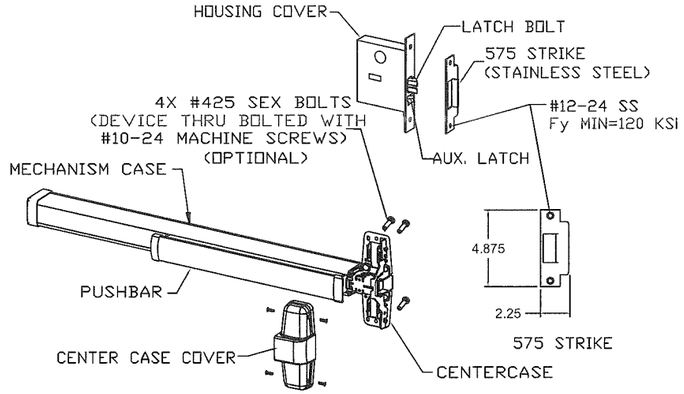

MORTISE EXIT DEVICE VON DUPRIN 98/9975(F)
USED IN **DOOR CONFIGURATION 10** (SEE SHT.1)

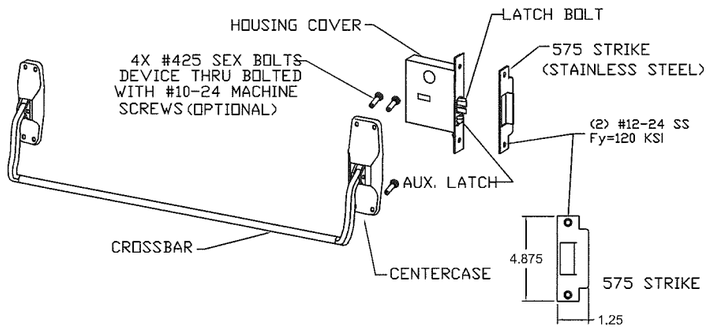

MORTISE EXIT DEVICE VON DUPRIN 8875(F)
USED IN **DOOR CONFIGURATION 10** (SEE SHT.1)

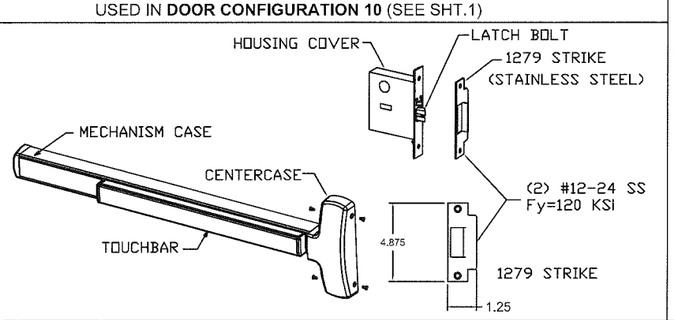

MORTISE EXIT DEVICE FALCON (F)25-M
USED IN **DOOR CONFIGURATION 10** (SEE SHT.1)

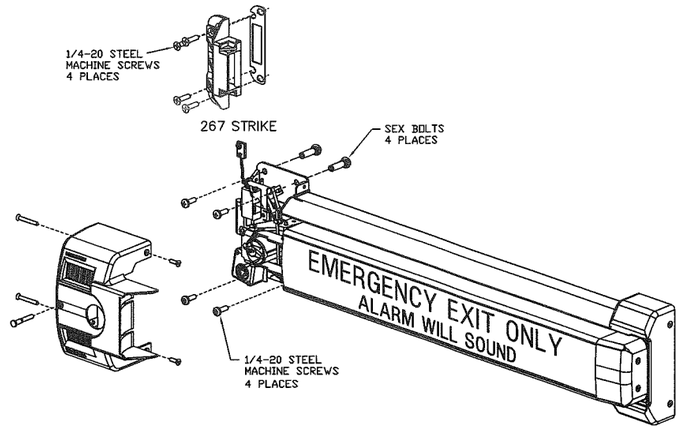

EXIT ALARM LOCK VON DUPRIN 2670 GUARD-X
USED IN **DOOR CONFIGURATION 11** (SEE SHT.1)

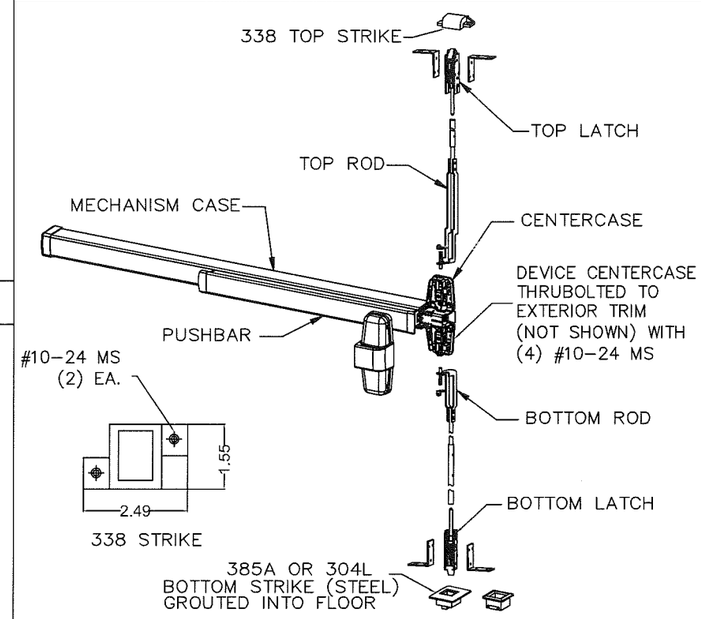

CONCEALED VERTICAL ROD EXIT DEVICE VON DUPRIN 98/9947-F
USED IN **DOOR CONFIGURATION 6** (SEE SHT.1)

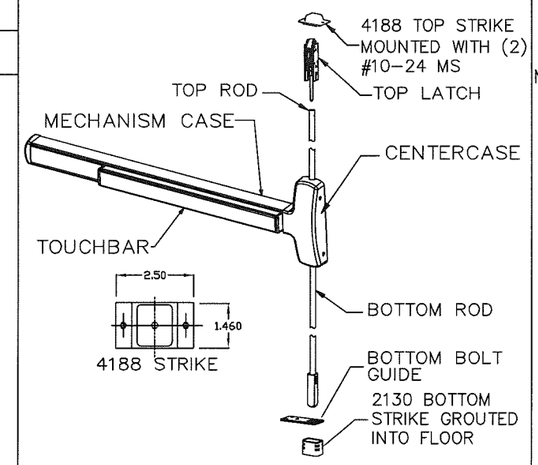

CONCEALED VERTICAL ROD EXIT DEVICE FALCON F-25-C
USED IN **DOOR CONFIGURATION 6** (SEE SHT.1)

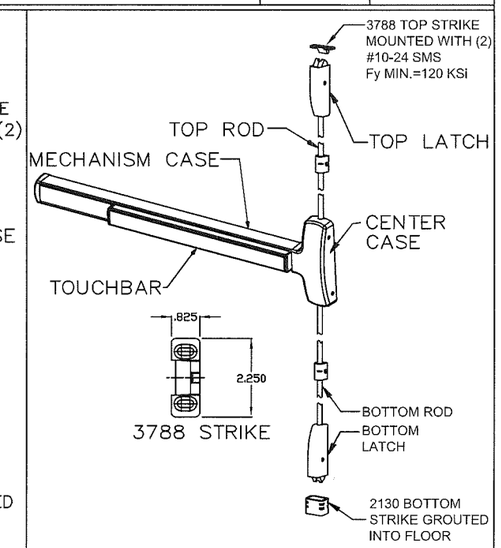

SURFACE VERTICAL ROD EXIT DEVICE FALCON (F)25-V
USED IN **DOOR CONFIGURATION 5** (SEE SHT.1)

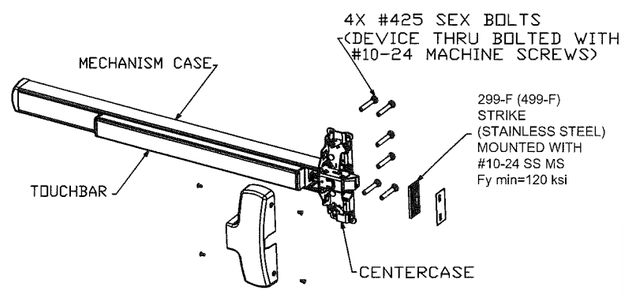

RIM EXIT DEVICE FALCON (F)25-R
USED IN **DOOR CONFIGURATION 13** (SEE SHT.1)

NOTES:
1. ELECTRICAL FUNCTIONS/INSTALLATION AND FIRE RATINGS ARE NOT PART OF THIS APPROVAL AND TO BE REVIEWED BY BUILDING OFFICIAL.
2. EXIT HARDWARE OPTIONS:
FOR 98/99 SERIES - E, RX, LX, SS, EL, QEL, CX, F ALK
FOR XP98/99 SERIES - E, RX, LX, QEL, F
TRIMS: ALL APPLICABLE TRIMS AVAILABLE.
FOR 88-F SERIES RIM - FUNCTION E
TRIMS: ALL APPLICABLE TRIMS AVAILABLE. PN MODEL OFFERED.
FOR 2670 GUARD-X
TRIMS: ALL APPLICABLE TRIMS AVAILABLE.
FOR FALCON (F)25-R, (F)25-M, F-25-C & (F)25-V SERIES - FUNCTIONS AE, DM, LM, LK, KOR, ED, EL, EA, FSA, FSE, HWEA
TRIMS: ALL APPLICABLE TRIMS AVAILABLE.

REVISIONS

LTR	DESCRIPTION			DATE	APPROVED
A	APPROVAL	DWG	YMF	05/20/07	
C	REVISED	DWG	RAP	12/10/07	
D	REVISED	DWG	YMF	12/10/07	
E	REVISED	DWG	YMF	04/08/08	
F	REVISED	DWG	YMF	06/03/08	
G	REVISED	DWG	YMF	03/03/09	
H	REVISED	DWG	YMF	04/07/10	
J	REVISED	NAME	JPD	11/01/13	
K	REVISED	DWG	JPD	02/01/15	
M	ENGINEER	CHANGE	LA	03/10/17	

PRODUCT REVISED
as complying with the Florida
Building Code
Acceptance No 17-0426.02
Expiration Date 5/5/23
By Ishaq I. Chanda
Miami-Dade Product Control

HERMES F. NORERO
LICENSE
No. 73778
STATE OF
FLORIDA
PROFESSIONAL ENGINEER
3/24/2017
HERMES F. NORERO P.E.
FLORIDA P.E.NO.73778
BUILDING DIVISION INC.
3800 E. DANIA BEACH BLVD. #300
DANIA BEACH, FL 33004
FBPE CERT. OF AUTHORIZATION NO. 29578

BEND RADIUS

THIRD ANGLE PROJECTION

DRAWN	YMF	DATE 05/20/07
CHECKED		
APPROVED		
ENG. APPVL	JPD	10/11/07

SCHLAGE LOCK COMPANY, LLC
6810 HILLSDALE COURT
INDIANAPOLIS, IN 46250

MANUFACTURING FACILITY:
STEELCRAFT
9017 BLUE ASH ROAD
CINCINNATI, OH 45242

TITLE: STEELCRAFT H SERIES SINGLE FLUSH OUTSWING COMMERCIAL STEEL DOORS WITH AND WITHOUT PANIC EXIT DEVICES

EXIT HARDWARE OPTIONS FOR FLUSH SINGLE DOORS

SIZE	FLAT	DWG NO.	REV
		IRFS07	M

SCALE: NTS | AUTOCAD | SHEET 9 of 14

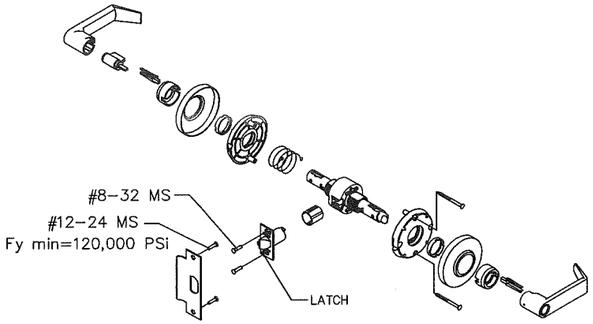

SCHLAGE AL-SERIES **CYLINDRICAL LOCKSET** WITH 1/2" THROW LATCH USED IN **DOOR CONFIGURATION 2** (SEE SHT.1)

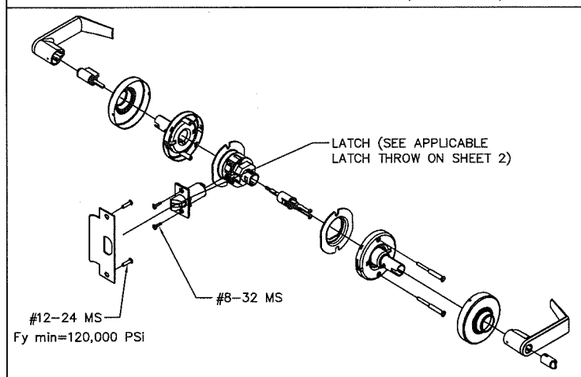

SCHLAGE D/ND-SERIES CYLINDRICAL LOCKSET USED IN **DOOR CONFIGURATIONS 3 & 4 & 16** (SEE SHTS.1&2)

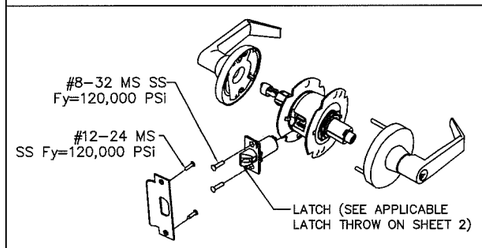

FALCON T-SERIES CYLINDRICAL LOCKSET USED IN **DOOR CONFIGURATIONS 4 & 16** (SEE SHTS.1&2)

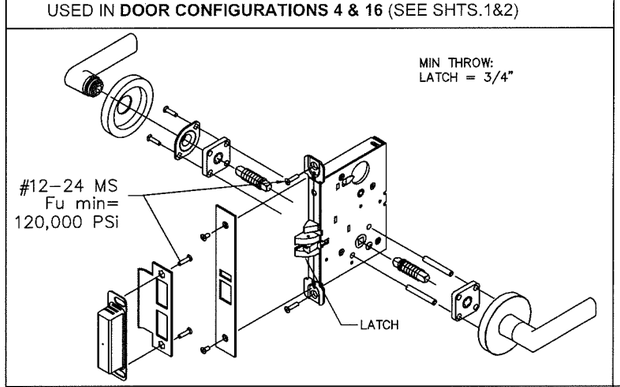

SCHLAGE L/LV 9000 SERIES MORTISE **LOCKSET** WITHOUT DEADBOLT USED IN **DOOR CONFIGURATIONS 14 & 15** (SEE SHTS.1&2)

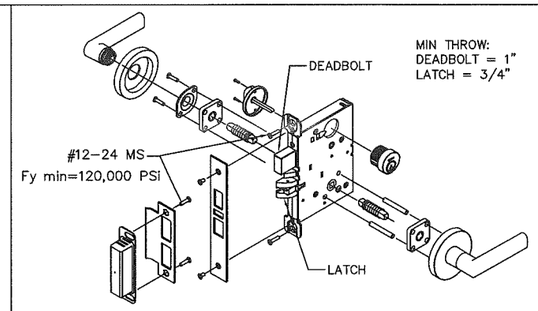

SCHLAGE L/LV 9400 SERIES MORTISE LOCKSET WITH DEADBOLT FUNCTION USED IN **DOOR CONFIGURATION 1** (SEE SHTS.1&2)

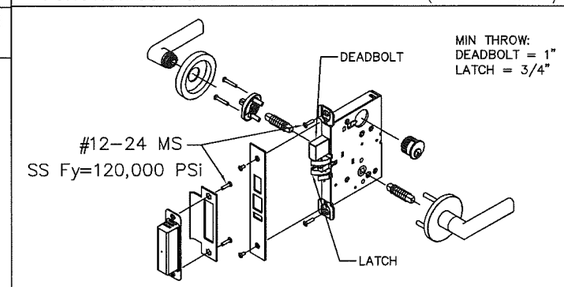

FALCON MA-SERIES MORTISE LOCKSET WITH DEADBOLT FUNCTION USED IN **DOOR CONFIGURATION 1** (SEE SHTS.1&2)

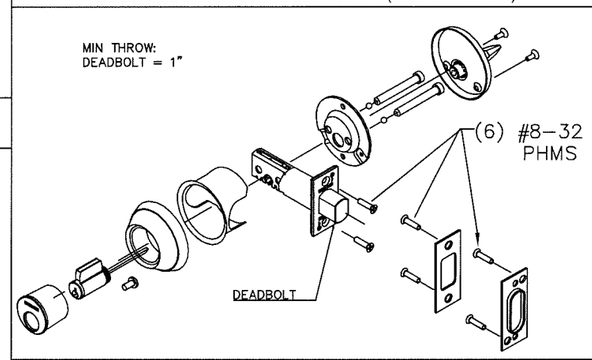

SCHLAGE B600/700/800 CYLINDRICAL DEADLOCK USED IN **DOOR CONFIGURATION 12** (SEE SHTS.1&2)

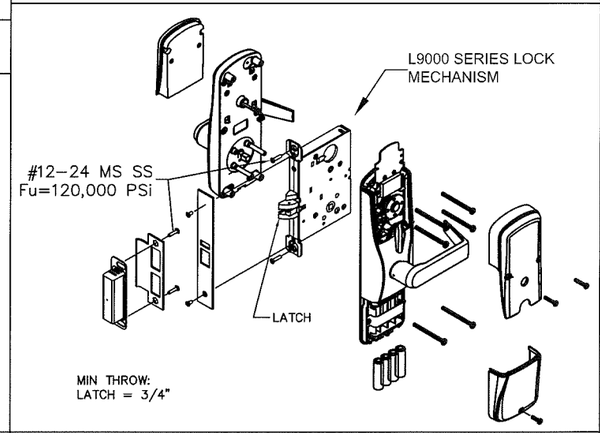

SCHLAGE AD/CO MS SERIES MORTISE LOCKSET WITHOUT DEADBOLT USED IN **DOOR CONFIGURATIONS 14 & 15** (SEE SHTS.1&2)

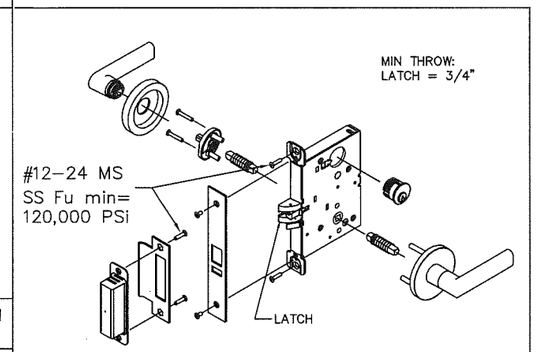

FALCON MA-SERIES MORTISE LOCKSET WITHOUT DEADBOLT FUNCTION USED IN **DOOR CONFIGURATION 15** (SEE SHTS.1&2)

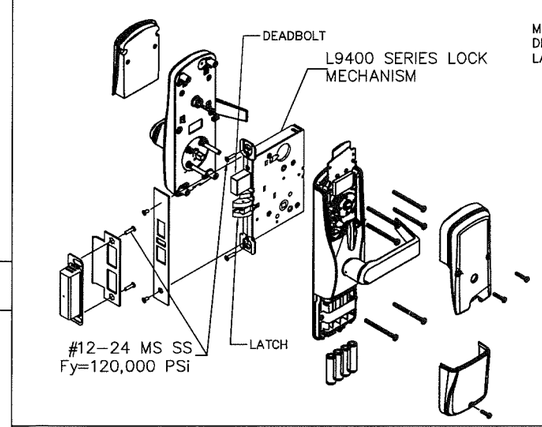

SCHLAGE AD/CO MD SERIES MORTISE LOCKSET W/DEADBOLT USED IN CONFIGURATIONS: 1 (SEE SHTS. 1&2)

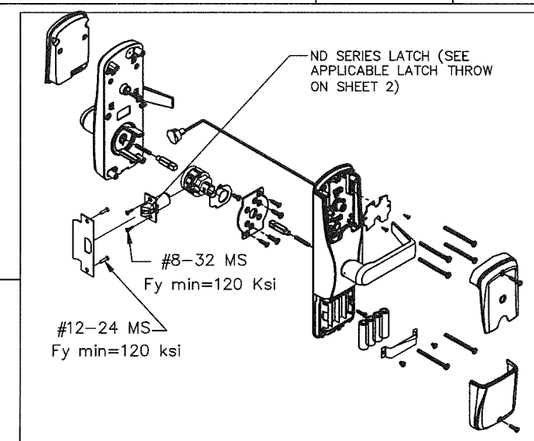

SCHLAGE AD/CO CY SERIES CYLINDRICAL LOCKSET USED IN CONFIGURATIONS: 3 & 4 & 16 (SEE SHTS.1&2)

REVISIONS

LTR	DESCRIPTION			DATE	APPROVED
A	APPROVAL	DWG	YMF	05/20/07	
B	REVISED	DWG	RAP	10/11/07	
C	REVISED	DWG	RAP	12/10/07	
D	REVISED	DWG	YMF	01/08/08	
E	REVISED	DWG	YMF	04/08/08	
F	REVISED	DWG	YMF	06/03/08	
G	REVISED	DWG	YMF	03/03/09	
H	REVISED	DWG	YMF	04/07/10	
J	REVISED	NAME	JPD	11/01/13	
K	REVISED	DWG	JPD	02/01/15	
M	ENGINEER	CHANGE	LA	02/16/17	

HERMES F. NORERO
LICENSE
No. 73778
STATE OF
3-22-2018
PROFESSIONAL ENGINEER

HERMES F. NORERO, P.E.
FLORIDA P.E. NO.73778
BUILDING DOORS, INC.
398 S. DIXIE BEACH BLVD. #338
DANIA BEACH, FL 33004
FBPE CERT. OF AUTHORIZATION NO. 29578

PRODUCT REVIEWED
as complying with the Florida
Building Code
Acceptance No. 17-0426.02
Expiration Date 5/5/23
By [signature]
Manager Product Control

BEND RADIUS

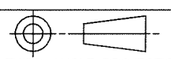

THIRD ANGLE PROJECTION

DRAWN	YMF	DATE 05/20/07
CHECKED		
APPROVED		
ENG. APPVL	JPD	10/11/07

SCHLAGE LOCK COMPANY, LLC
6810 HILLSDALE COURT
INDIANAPOLIS, IN 46250

MANUFACTURING FACILITY:
STEELCRAFT
9017 BLUE ASH ROAD
CINCINNATI, OH 45242

TITLE: STEELCRAFT H SERIES SINGLE FLUSH OUTSWING COMMERCIAL STEEL DOORS WITH AND WITHOUT PANIC EXIT DEVICES

HARDWARE OPTIONS FOR FLUSH SINGLE DOORS.

SIZE	FLAT	DWG NO.	REV
		IRFS07	M

SCALE:	NTS	AUTOCAD		SHEET 10 of 14

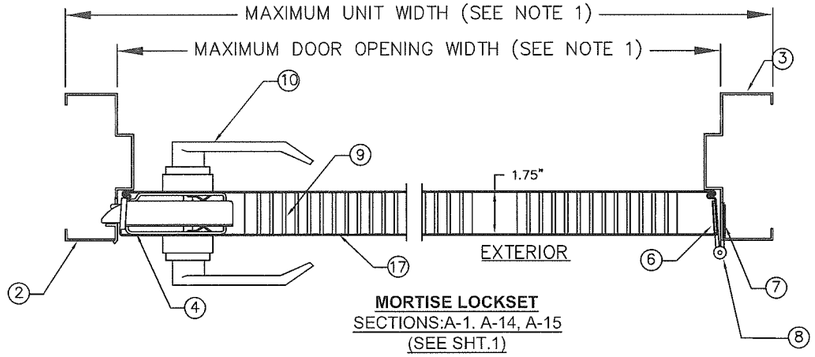

MORTISE LOCKSET
SECTIONS:A-1. A-14, A-15
(SEE SHT.1)

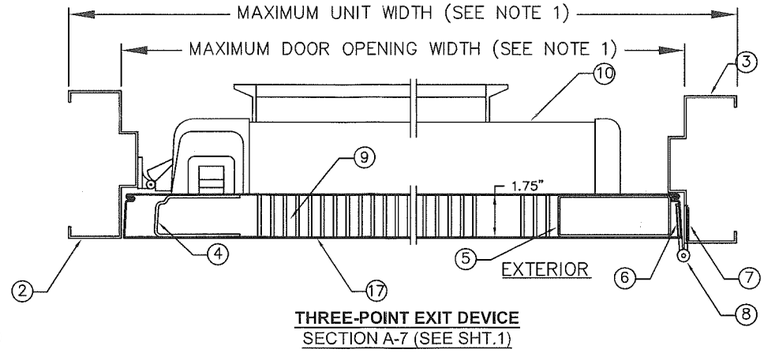

THREE-POINT EXIT DEVICE
SECTION A-7 (SEE SHT.1)

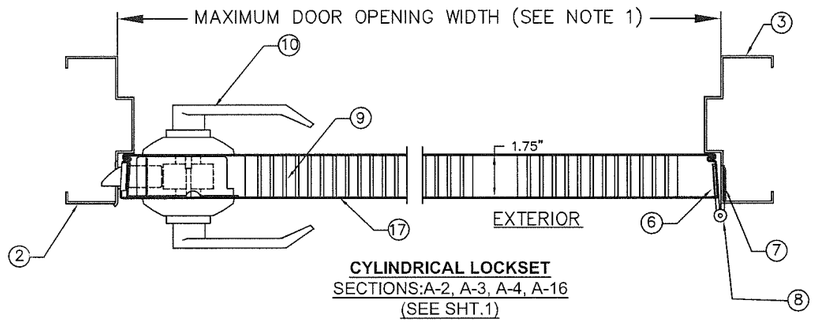

CYLINDRICAL LOCKSET
SECTIONS:A-2, A-3, A-4, A-16
(SEE SHT.1)

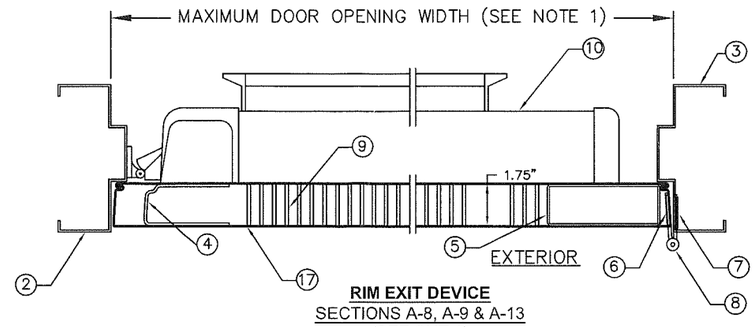

RIM EXIT DEVICE
SECTIONS A-8, A-9 & A-13
(SEE SHT.1)

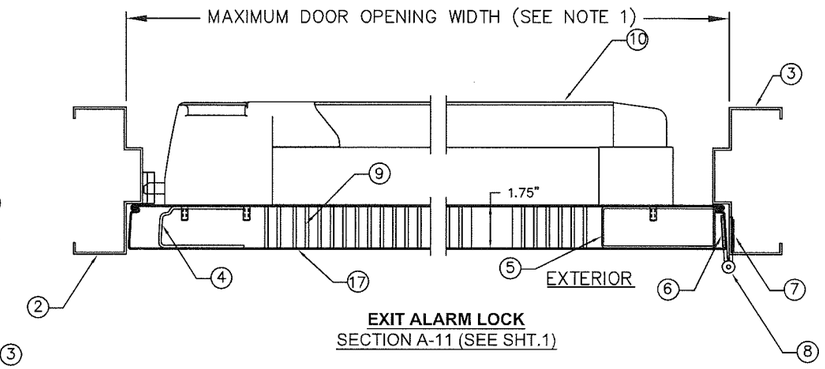

EXIT ALARM LOCK
SECTION A-11 (SEE SHT.1)

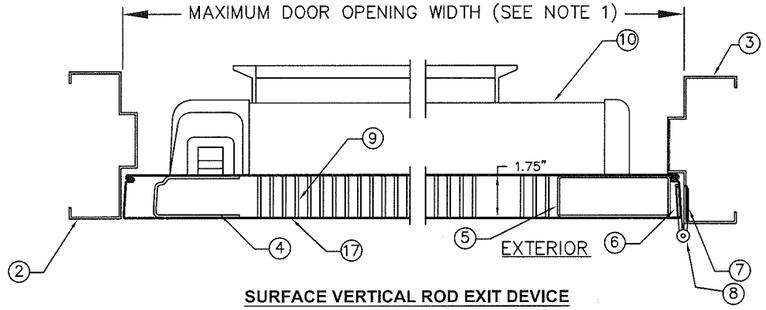

SURFACE VERTICAL ROD EXIT DEVICE
SECTION A-5 (SEE SHT.1)

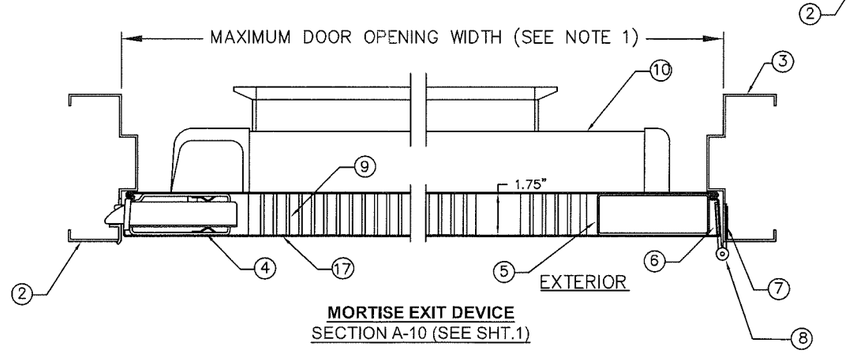

MORTISE EXIT DEVICE
SECTION A-10 (SEE SHT.1)

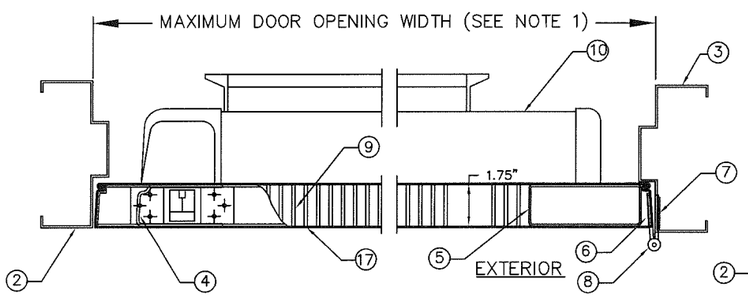

CONCEALED VERTICAL ROD EXIT DEVICE
SECTION A-6 (SEE SHT.1)

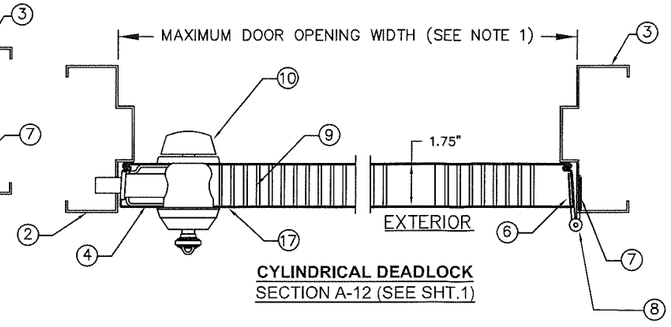

CYLINDRICAL DEADLOCK
SECTION A-12 (SEE SHT.1)

NOTES:

1. FOR MAXIMUM OPENING DIMENSION SIZES AND MAX UNIT SIZES SEE SHEETS 1, 2, 3, 11 & 12.
2. SINGLE OUTSWING DOORS, SEE SHEET 4 FOR INSTALLATION INFORMATION.

REVISIONS

LTR	DESCRIPTION			DATE	APPROVED
A	APPROVAL	DWG	YMF	05/20/07	
C	REVISED	DWG	RAP	12/10/07	
D	REVISED	DWG	YMF	12/10/07	
E	REVISED	DWG	YMF	04/08/08	
F	REVISED	DWG	YMF	06/03/08	
G	REVISED	DWG	YMF	03/04/09	
H	REVISED	DWG	YMF	04/07/10	
J	REVISED	NAME	JPD	11/01/13	
M	ENGINEER	CHANGE	LA	03/10/17	

PRODUCT REVISED
as complying with the Florida Building Code
Acceptance No 17-0426.02
Expiration Date 3/5/23
By Ishaq I. Chanda
Miami-Dade Product Control

HERMES F. NORERO
LICENSE
No 73778
STATE OF FLORIDA
PROFESSIONAL ENGINEER
3-27-2018
HERMES F. NORERO, P.E.
FLORIDA LICENSE #73778
BUILDING DROPS, INC.
288 E. DANIA BEACH BLVD. #336
DANIA BEACH, FL 33004
FBPE CERTIFICATE OF AUTHORIZATION NO. 29766

BEND RADIUS		SCHLAGE LOCK COMPANY, LLC 6810 HILLSADLE COURT INDIANAPOLIS, IN 46250	MANUFACTURING FACILITY: STEELCRAFT 9017 BLUE ASH ROAD CINCINNATI, OH 45242
THIRD ANGLE PROJECTION		TITLE: STEELCRAFT H SERIES SINGLE FLUSH OUTSWING COMMERCIAL STEEL DOORS WITH AND WITHOUT PANIC EXIT DEVICES HORIZONTAL CROSS SECTIONS FOR FLUSH SINGLE DOORS.	
DRAWN YMF	DATE 05/20/007		
CHECKED			
APPROVED		SIZE FLAT	DWG NO. IRFS07 — REV M
ENG. APPVL JPD	10/11/07	SCALE: NTS AUTOCAD	SHEET 11 of 14

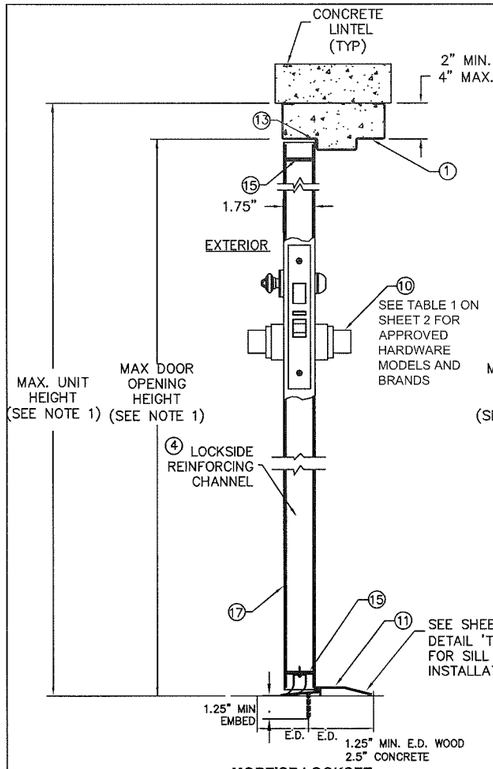

MORTISE LOCKSET
SECTION: B-1
(SEE SHT.1)

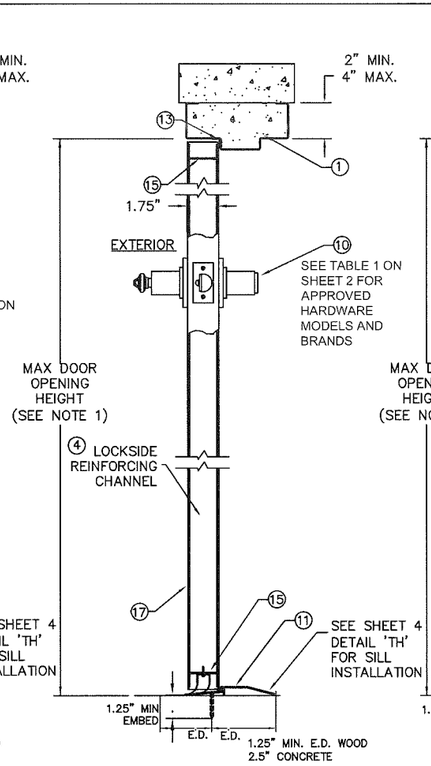

CYLINDRICAL LOCKSET
SECTIONS B-2, B-3, B-4 & B-16
(SEE SHT.1)

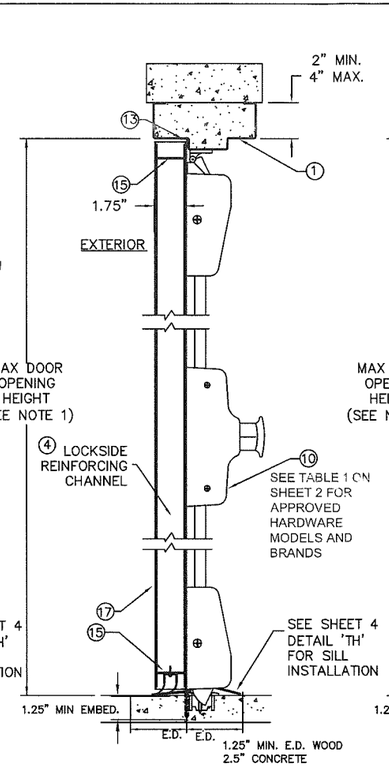

SURFACE VERTICAL ROD EXIT DEVICE
SECTION B-5 (SEE SHT.1)

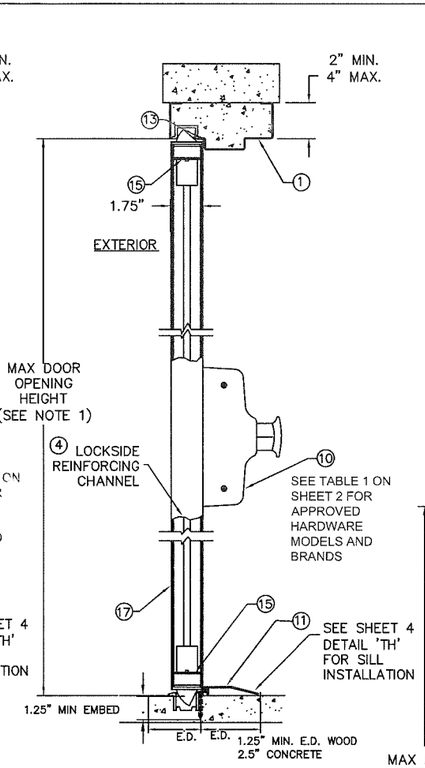

CONCEALED VERTICAL ROD EXIT DEVICE
SECTION B-6 (SEE SHT.1)

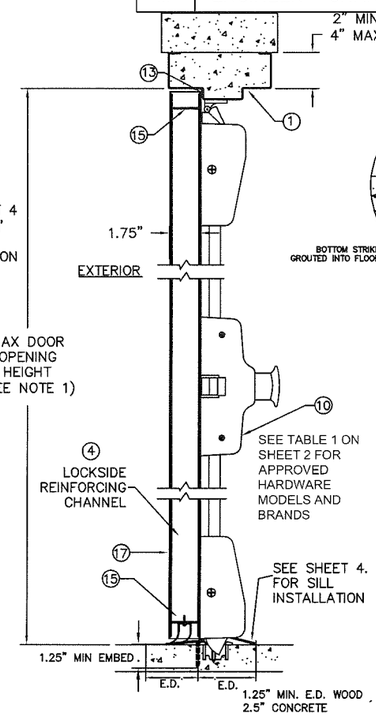

THREE-POINT EXIT DEVICE
SECTION B-7 (SEE SHT.1)

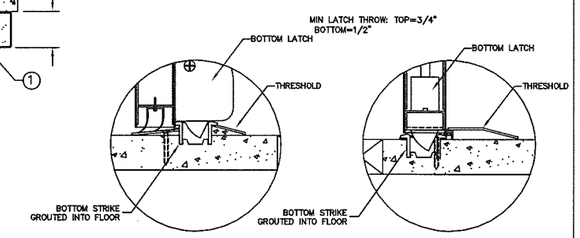

FLOOR LATCHING DETAIL SURFACE VERTICAL ROD EXIT DEVICE

FLOOR LATCHING DETAIL CONCEALED VERTICAL ROD EXIT DEVICE

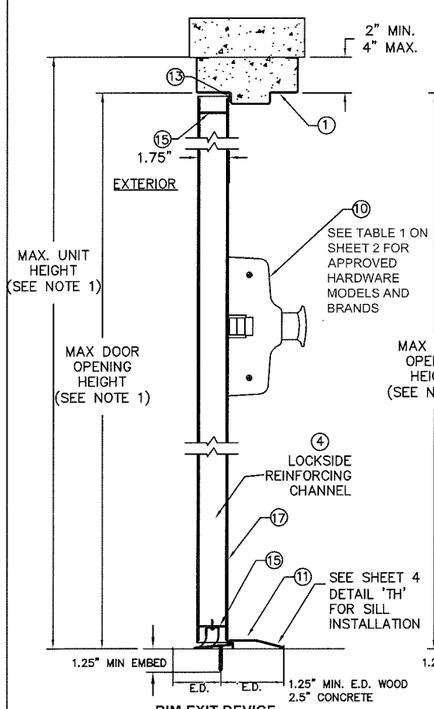

RIM EXIT DEVICE
SECTIONS B-8, B-9 & B-13
(SEE SHT.1)

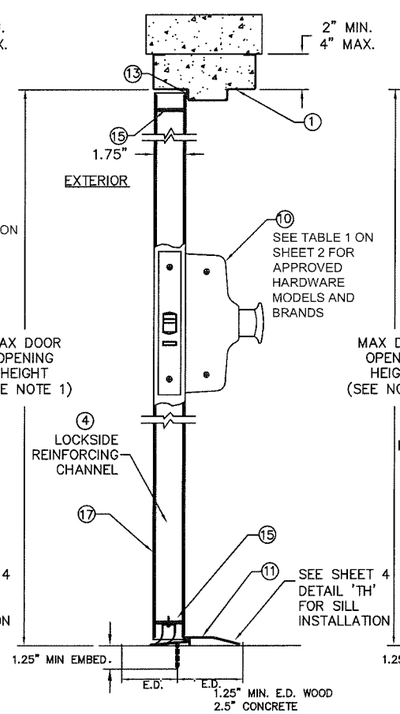

MORTISE EXIT DEVICE
SECTION B-10 (SEE SHT.1)

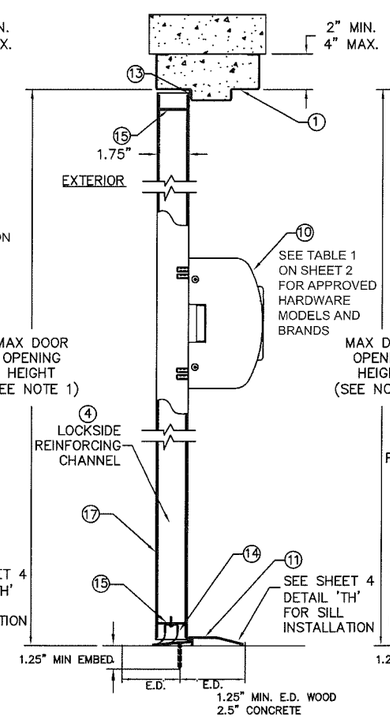

EXIT ALARM LOCK
SECTION B-11 (SEE SHT.1)

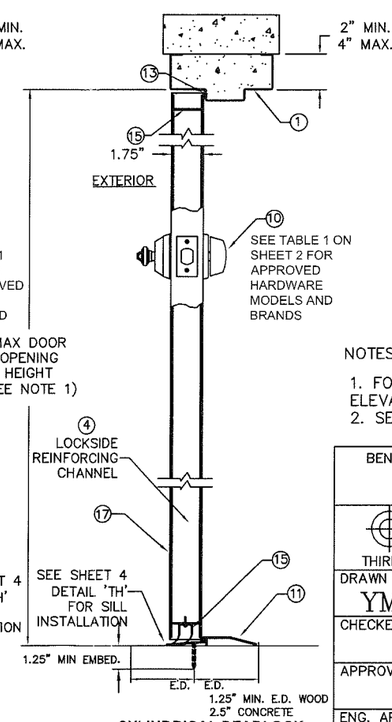

CYLINDRICAL DEADLOCK
SECTION B-12 (SEE SHT.1)

NOTES:

1. FOR MAXIMUM DOOR & UNIT OPENING SIZES SEE ELEVATION SHEET 1 AND TABLE 1 ON SHEET 2 AND SHEETS 11 & 12.
2. SEE SHEET 4 FOR ANCHOR INSTALLATION DETAILS.

REVISIONS

LTR	DESCRIPTION			DATE	APPROVED
A	APPROVAL	DWG	YMF	05/20/07	
D	REVISED	DWG	YMF	01/08/08	
E	REVISED	DWG	YMF	04/08/08	
F	REVISED	DWG	YMF	06/03/08	
G	REVISED	DWG	YMF	03/04/09	
H	REVISED	DWG	YMF	04/07/10	
J	REVISED	NAME	JPD	11/01/13	
K	REVISED	DWG	JPD	02/01/15	
M	ENGINEER	CHANGE	LA	03/10/17	

PRODUCT REVISED
as complying with the Florida Building Code
Acceptance No 17-0426.02
Expiration Date 5.18.23
Miami-Dade Product Control

HERMES F. NORERO
LICENSE
No. 73778
STATE OF FLORIDA
PROFESSIONAL ENGINEER
3-29-2018
HERMES F. NORERO, P.E.
FLORIDA P.E. NO. 73778
BUILDING DOORS, INC.
9800 DANIA BEACH BLVD. #345
DANIA BEACH, FL 33004
FBPE CERT. OF AUTHORIZATION NO. 23678

BEND RADIUS

THIRD ANGLE PROJECTION

DRAWN	YMF	DATE 05/20/07
CHECKED		
APPROVED		
ENG. APPVL	JPD	10/11/07

SCHLAGE LOCK COMPANY, LLC
6810 HILLSDALE COURT
INDIANAPOLIS, IN 46250

MANUFACTURING FACILITY:
STEELCRAFT
9017 BLUE ASH ROAD
CINCINNATI, OH 45242

TITLE: STEELCRAFT H SERIES SINGLE FLUSH OUTSWING COMMERCIAL STEEL DOORS WITH AND WITHOUT PANIC EXIT DEVICES

VERTICAL CROSS SECTIONS FOR FLUSH SINGLE DOORS.

SIZE	FLAT	DWG NO.	REV
		IRFS07	M

SCALE: NTS | AUTOCAD | SHEET 12 of 14

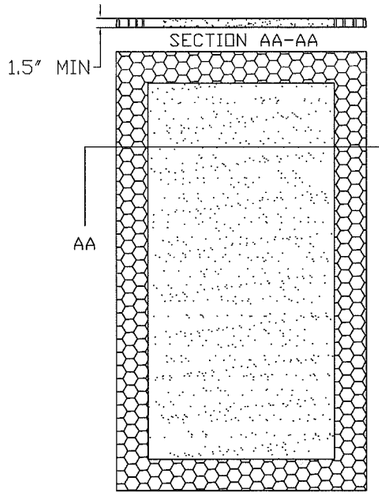

(A) EXPANDED POLYSTYRENE FOAM
BY ATLAS EPS
DENSITY: 1.0 LBS/FT^3

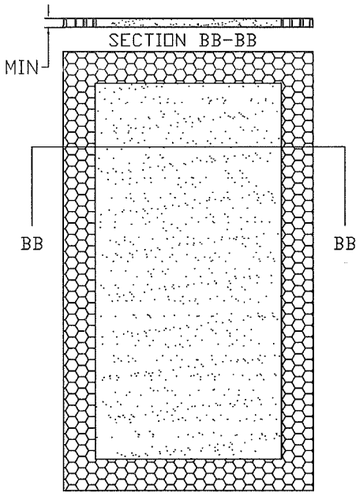

(B) POLYISOCYANURATE
(POLYURETHANE)
BY ELLIOT CO. OF INDIANAPOLIS, IN
DENSITY: 2 LBS/FT^3

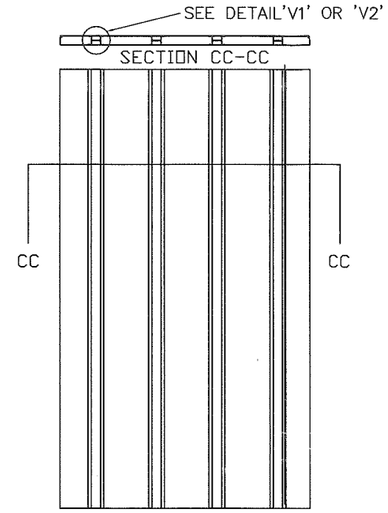

(C) STEEL STIFFENED
HAT SHAPED SECTIONS

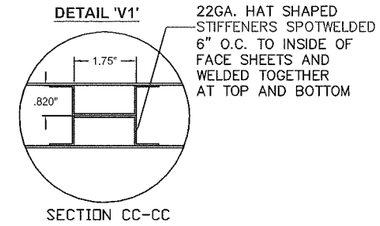

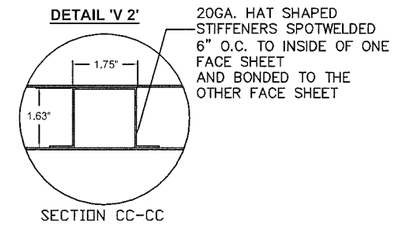

REVISIONS				
LTR	DESCRIPTION		DATE	APPROVED
A	APPROVAL DWG	JPD	02/03/14	
B	REVISED DWG	JPD	02/01/15	
C	REVISED DWG	JPD	05/05/15	
M	ENGINEER CHANGE	LA	03/10/17	

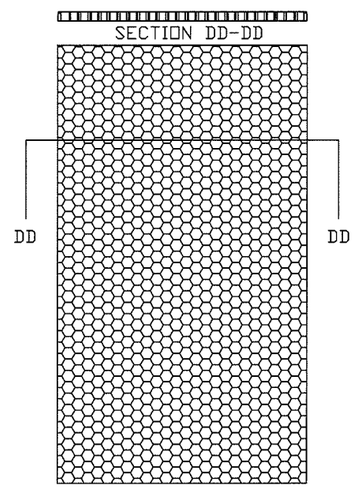

(D) HONEYCOMB
KRAFT PAPER.

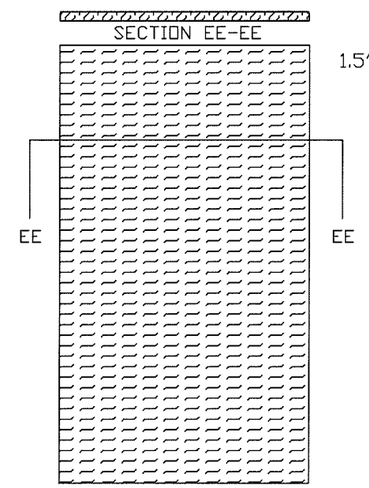

(E) TEMPERATURE RISE CORE
MINERAL FIBER BOARD
DENSITY: 17±1.5 LBS/FT^3
PYROPHIBIC SYSTEMS LTD
PYROPHOBIC PSL P25C-60 CORE
OR
MARSHFIELD DOOR SYSTEMS
CALCIUM SILICATE MINERAL CORE

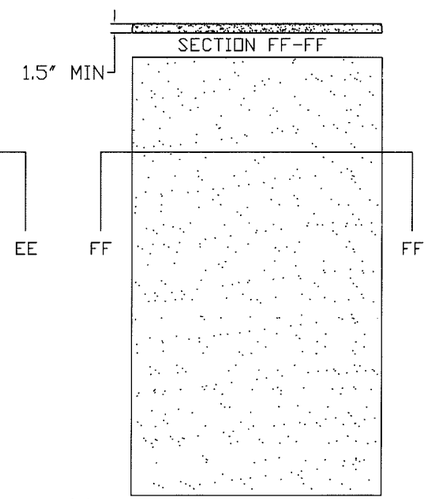

(F) EXPANDED POLYSTYRENE FOAM
BY ATLAS EPS DENSITY: 1.0 LB/FT^3
OR POLYISOCYANURATE
(POLYURETHANE)
BY ELIOTT CO. OF INDIANAPOLIS, IN
DENSITY: 2 LBS/FT^3

PRODUCT REVISED
as complying with the Florida
Building Code
Acceptance No. 17-0426.02
Expiration Date 5/5/23
B. Ishwar Lalchandani
Miami-Dade Product Control

HERMES R. NORERO
LICENSE
No. 73778
3/10/2017
STATE OF FLORIDA
PROFESSIONAL ENGINEER
HERMES R. NORERO, P.E.
FLORIDA P.E. NO. 73778
BUILDING DROPS, INC.
3881 E. DANIA BEACH BLVD. #258
DANIA BEACH, FL 33004
(FBPE CERT. OF AUTHORIZATION NO. 26578)

NOTES:
1. CORE MATERIAL SHOWN WITHOUT CUTOUTS FOR REINFORCEMENTS

BEND RADIUS

THIRD ANGLE PROJECTION

DRAWN JPD	DATE 02/03/14
CHECKED	
APPROVED	
ENG. APPVL	

SCHLAGE LOCK COMPANY, LLC
6810 HILLSDALE COURT
INDIANAPOLIS, IN 46250

MANUFACTURING FACILITY:
STEELCRAFT
9017 BLUE ASH ROAD
CINCINNATI, OH 45242

TITLE: STEELCRAFT H SERIES SINGLE FLUSH OUTSWING COMMERCIAL STEEL DOORS WITH AND WITHOUT PANIC EXIT DEVICES

MIAMI-DADE COUNTY PRODUCT APPROVAL
DOOR CORE OPTIONS

SIZE	FLAT	DWG NO.	REV
		IRFS07	M

SCALE: NTS | AUTOCAD | SHEET 13 of 14

REVISIONS			
LTR	DESCRIPTION	DATE	APPROVED
A	APPROVAL DWGS.	09/05/13	
B	REVISED	02/01/15	
M	ENGINEER CHANGE LA	03/10/17	

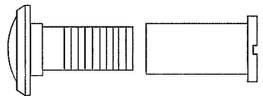

(24) IVES 698/U698 DOOR VIEWER
APPLICATION LIMITED TO +/- 75 PSF
DESIGN PRESSURE OR LESS

STEEL BUTT HINGE
IVES 5BB1/3CB1
STANLEY FBB179/1900
HAGER BB1279
4.5" X 4.5" STD. WT. MIN.
.134" MIN. THICKNESS
Fy MIN. = 36ksi

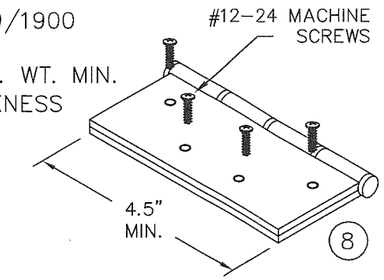

CONTINUOUS HINGE
IVES 112HD & 224HD
STANLEY 661HD
SELECT SL11HD
PEMKO FM_HD SERIES
HAGER 780-224HD
ABH A240HD
ALUMINUM 6036-T6 MIN
.110" MIN. THICKNESS

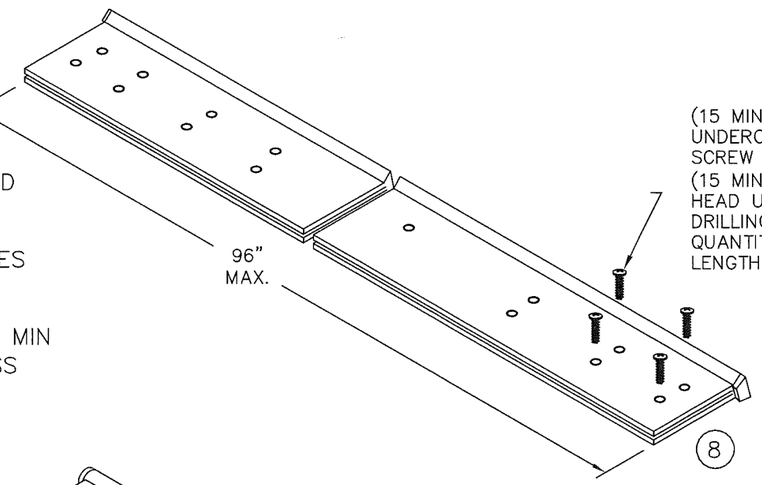

(15 MIN.) 12-24x3/4"FLAT HEAD UNDERCUT SELF DRILLING SCREW DOOR LEAF
(15 MIN.) 12-24 X 1-3/8" FLAT HEAD UNDERCUT SELF DRILLING SCREW FRAME LEAF
QUANTITY VARIES PER HINGE LENGTH

STEEL CONTINUOUS HINGE
IVES 600
.075 MIN. (14GA.) THICKNESS
1012 COLD ROLLED STEEL
Fy MIN. 45ksi
STAINLESS STEEL CONTINUOUS HINGE
IVES 700, 700CS
HAGER 790-900
MARKAR FM-300 & HG305
ABH A500
.075" MIN. (14GA.) THICKNESS
304 STAINLESS STEEL
Fy MIN. 31ksi

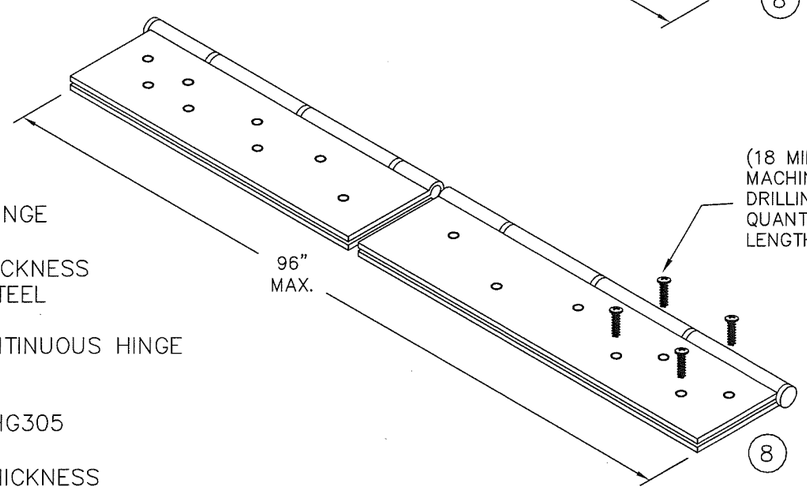

(18 MIN.) #10-24X 1/2" MIN. MACHINE SCREW OR SELF DRILLING EACH HINGE LEAF
QUANTITY VARIES PER HINGE LENGTH

CONTINUOUS HINGE NOTES:
1. QUANTITY OF SCREWS VARIES PER HINGE LENGTH, MANUFACTURER AND MODEL NUMBER
2. SCREW SPACING VARIES PER HINGE LENGTH, MANUFACTURER AND MODEL NUMBER
3. INSTALL HINGES PER THE MANUFACTURERS INSTALLATION INSTRUCTIONS

PRODUCT REVISED
as complying with the Florida
Building Code
Acceptance No. 17-0426.02
Expiration Date 5/5/2023
By: Ishwar L. Chawla
Miami-Dade Product Control

HERMES F. NORERO
LICENSE
No. 73778
STATE OF
PROFESSIONAL ENGINEER
HERMES F. NORERO, P.E.
2 FLORIDA P.E. 73778
BUILDING EXPERTS, INC.
398 E. DANIA BEACH BLVD. #338
DANIA BEACH, FL 33004
FBPE CERT OF AUTHORIZATION NO. 28678

BEND RADIUS

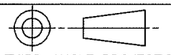

THIRD ANGLE PROJECTION

DRAWN JPD	DATE 02/03/14
CHECKED	
APPROVED	
ENG. APPVL	

SCHLAGE LOCK COMPANY, LLC
6810 HILLSDALE COURT
INDIANAPOLIS, IN 46250

MANUFACTURING FACILITY:
STEELCRAFT
9017 BLUE ASH ROAD
CINCINNATI, OH 45242

TITLE: STEELCRAFT H SERIES SINGLE FLUSH OUTSWING COMMERCIAL STEEL DOORS WITH AND WITHOUT PANIC EXIT DEVICES

HINGE AND VIEWER OPTIONS

SIZE	FLAT	DWG NO.	REV
		IRFS07	M
SCALE: NTS	AUTOCAD		SHEET 14 of 14