MIAMI-DADE COUNTY
DEPARTMENT OF REGULATORY AND ECONOMIC RESOURCES (RER)
BOARD AND CODE ADMINISTRATION DIVISION

MIAMI-DADE COUNTY
PRODUCT CONTROL SECTION
11805 SW 26 Street, Room 208
Miami, Florida 33175-2474
T (786) 315-2590 F (786) 315-2599
www.miamidade.gov/economy

NOTICE OF ACCEPTANCE (NOA)

Arrow United Industries a division of Mestek, Inc.
450 Riverside Drive
Wyalusing, PA 18853

SCOPE:

This NOA is being issued under the applicable rules and regulations governing the use of construction materials. The documentation submitted has been reviewed and accepted by Miami-Dade County RER-Product Control Section to be used in Miami Dade County and other areas where allowed by the Authority Having Jurisdiction (AHJ).

This NOA shall not be valid after the expiration date stated below. The Miami-Dade County Product Control Section (In Miami Dade County) and/or the AHJ (in areas other than Miami Dade County) reserve the right to have this product or material tested for quality assurance purposes. If this product or material fails to perform in the accepted manner, the manufacturer will incur the expense of such testing and the AHJ may immediately revoke, modify, or suspend the use of such product or material within their jurisdiction. RER reserves the right to revoke this acceptance, if it is determined by Miami-Dade County Product Control Section that this product or material fails to meet the requirements of the applicable building code.

This product is approved as described herein, and has been designed to comply with the Florida Building Code, including the High Velocity Hurricane Zone.

DESCRIPTION: Model EA-52 5" Aluminum Louver System

APPROVAL DOCUMENT: Drawing No. **1685**, titled "EA-52 Impact Louver System", sheets 1 through 10 of 10, dated 07/23/2009, with revision B1 dated 07/05/2017, prepared by W. W. Schaefer Engineering & Consulting, P.A., signed and sealed by Warren. W. Schaefer, P.E., bearing the Miami-Dade County Product Control revision stamp with the Notice of Acceptance number and expiration date by the Miami-Dade County Product Control Section.

MISSILE IMPACT RATING: Large and Small Missile Impact Resistant

LABELING: Each unit shall bear a permanent label with the manufacturer's name or logo, city, state, model/series, and following statement: "Miami-Dade County Product Control Approved", unless otherwise noted herein.

RENEWAL of this NOA shall be considered after a renewal application has been filed and there has been no change in the applicable building code negatively affecting the performance of this product.

TERMINATION of this NOA will occur after the expiration date or if there has been a revision or change in the materials, use, and/or manufacture of the product or process. Misuse of this NOA as an endorsement of any product, for sales, advertising or any other purposes shall automatically terminate this NOA. Failure to comply with any section of this NOA shall be cause for termination and removal of NOA.

ADVERTISEMENT: The NOA number preceded by the words Miami-Dade County, Florida, and followed by the expiration date may be displayed in advertising literature. If any portion of the NOA is displayed, then it shall be done in its entirety.

INSPECTION: A copy of this entire NOA shall be provided to the user by the manufacturer or its distributors and shall be available for inspection at the job site at the request of the Building Official.

This NOA **revises NOA # 14-0513.07** and consists of this page 1 and evidence pages E-1 and E-2, as well as approval document mentioned above.

The submitted documentation was reviewed by **Carlos M. Utrera, P.E.**

MIAMI-DADE COUNTY APPROVED

10/11/2017

NOA No. 17-0713.05
Expiration Date: January 6, 2020
Approval Date: October 19, 2017

NOTICE OF ACCEPTANCE: EVIDENCE SUBMITTED

1. EVIDENCE SUBMITTED UNDER PREVIOUS NOAs

A. DRAWINGS *"Submitted under NOA # 11-1117.10"*

1. Drawing No. **1685**, titled "EA-52 Impact Louver System", sheets 1 through 10 of 10, dated 07/23/2009, with revision A1 dated 11/08/2011, prepared by W. W. Schaefer Engineering & Consulting, P.A., signed and sealed by Warren W. Schaefer, P.E.

B. TESTS *"Submitted under NOA # 09-1015.09"*

1. Test reports on 1) Uniform Static Air Pressure Test, Loading per FBC TAS 202-94
   2) Large Missile Impact Test per FBC, TAS 201-94
   3) Cyclic Wind Pressure Loading per FBC, TAS 203-94
   along with marked-up drawings and installation diagram, of "EA-52 Aluminum Louver Systems", prepared by Hurricane Test Laboratory, Inc., Report No. **0198-0305-09**, dated 09/29/2009, signed and sealed by Vinu J. Abraham, P.E.
2. Test reports on 1) Uniform Static Air Pressure Test, Loading per FBC TAS 202-94
   2) Large Missile Impact Test per FBC, TAS 201-94
   3) Cyclic Wind Pressure Loading per FBC, TAS 203-94
   along with marked-up drawings and installation diagram, of "EA-52 Aluminum Louver Systems", prepared by Hurricane Test Laboratory, Inc., Report No. **0198-0715-09**, dated 09/30/2009, signed and sealed by Vinu J. Abraham, P.E.

C. CALCULATIONS *"Submitted under NOA #14-0513.07"*

1. Wood screw calculations prepared by W.W. Schaefer Engineering & Consulting, P.A., dated 04/14/2014, signed and sealed by Warren W. Schaefer, P.E.

"Submitted under NOA # 09-1015.09"

2. Structural calculations prepared by W.W. Schaefer Engineering & Consulting, P.A., dated 10/06/2009, signed and sealed by Warren W. Schaefer, P.E.

D. QUALITY ASSURANCE

1. Miami-Dade Department of Regulatory and Economic Resources (RER)

E. MATERIAL CERTIFICATIONS

1. None.

F. STATEMENTS *"Submitted under NOA #14-0513.07"*

1. Statement letter of code conformance to 2010 and 5th edition (2014) FBC issued by W. W. Schaefer Engineering & Consulting, P.A., dated 04/14/2014, signed and sealed by Warren W. Schaefer, P.E.
2. No financial interest letter issued by W. W. Schaefer Engineering & Consulting, P.A, dated 04/14/2014, signed and sealed by Warren W. Schaefer, P.E.

10/11/2017

Carlos M. Utrera, P.E.
Product Control Examiner
NOA No. 17-0713.05
Expiration Date: January 6, 2020
Approval Date: October 19, 2017

NOTICE OF ACCEPTANCE: EVIDENCE SUBMITTED

2. NEW EVIDENCE SUBMITTED

A. DRAWINGS

1. Drawing No. **1685**, titled "EA-52 Impact Louver System", sheets 1 through 10 of 10, dated 07/23/2009, with revision A1 dated 11/08/2011, prepared by W. W. Schaefer Engineering & Consulting, P.A., signed and sealed by Warren W. Schaefer, P.E.

B. TESTS

1. None.

C. CALCULATIONS

1. None.

D. QUALITY ASSURANCE

1. Miami-Dade Department of Regulatory and Economic Resources (RER)

E. MATERIAL CERTIFICATIONS

1. None.

F. STATEMENTS

1. Statement letter of code conformance to the 5th Edition (2014) and 6th Edition (2017) FBC issued by W. W. Schaefer Engineering & Consulting, P.A., dated 07/05/2017, signed and sealed by Warren W. Schaefer, P.E.

10/11/2017

Carlos M. Utrera, P.E.
Product Control Examiner
NOA No. 17-0713.05
Expiration Date: January 6, 2020
Approval Date: October 19, 2017

PANEL LOAD TABLE (WITH SIDE CLIPS)

PANEL WIDTH (IN.)	(1) CLIP SPACING (IN.)	ALLOWABLE PRESSURE (+/− PSF)
36	8	120
	13	104
	18	75
42	8	120
	13	89
	18	64
48	8	120
	13	78
	18	56
54	8	120
	13	69
	18	50
60	8	120
	13	62
	18	45

(1) CLIP SPACING WITHIN SLEEVE MOUNTED LOUVERS MAY NOT VARY AND SHALL ALWAYS BE 8".

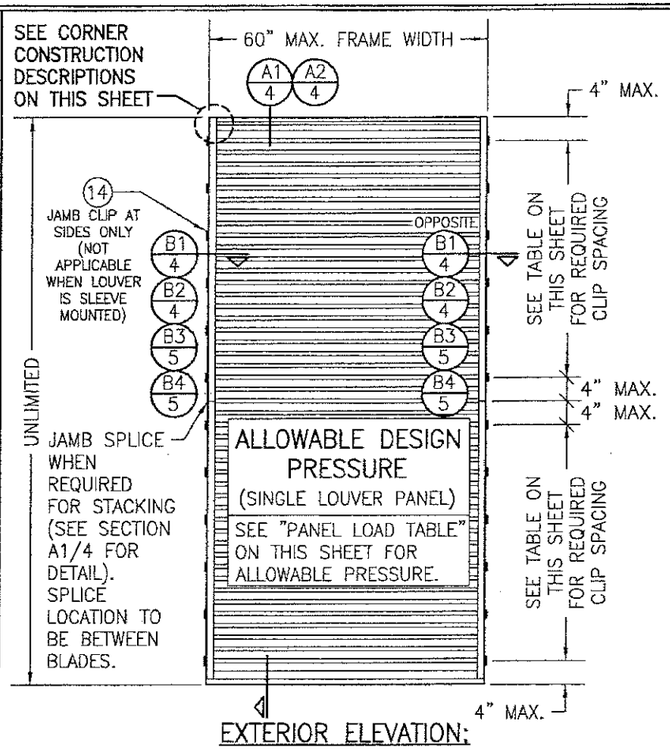

EXTERIOR ELEVATION:
SINGLE LOUVER PANEL
(ARCHITECTURAL & NON-ARCHITECTURAL)
SCALE: 1/2" = 1'-0"

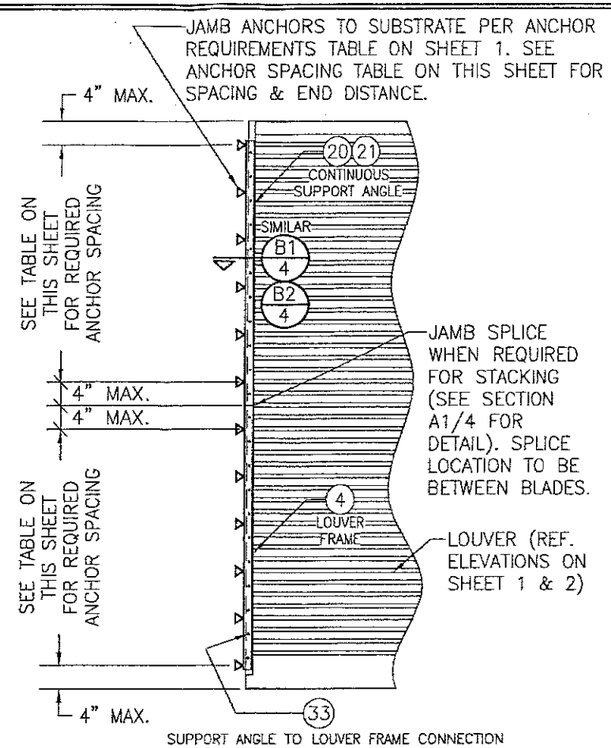

INTERIOR ELEVATION:
(OPTIONAL SIDE JAMB INSTALLATION WITH CONTINUOUS SIDE ANGLES)
SCALE: 1/2" = 1'-0"
(FOR DETAIL NOT SHOWN, SEE OTHER ELEVATIONS)

PANEL ANCHOR SPACING/PRESSURE TABLE (WITH CONTINUOUS SIDE SUPPORT ANGLE)

PANEL WIDTH (IN.)	ANGLE TO SUBSTRATE ANCHORS		ANGLE TO LOUVER FRAME SCREWS		ALLOWABLE PRESSURE (+/− PSF)
	SPACING (IN.)	END DIST. (IN.)	SPACING (IN.)	END DIST. (IN.)	
36	8	4	4	2	120
	13	7 1/2	7 1/2	3 3/4	104
	18	9	9	4 1/2	75
42	8	4	4	2	120
	13	7 1/2	7 1/2	3 3/4	89
	18	9	9	4 1/2	64
48	8"	4	4	2	120
	13	7 1/2	7 1/2	3 3/4	78
	18	9	9	4 1/2	56
54	8	4	4	2	120
	13	7 1/2	7 1/2	3 3/4	69
	18	9	9	4 1/2	50
60	8	4	4	2	120
	13	7 1/2	7 1/2	3 3/4	62
	18	9	9	4 1/2	45

NOTE: SINGLE LOUVER PANELS MAY BE STACKED/SPLICED VERTICALLY OR THE LOUVER PANEL MAY RUN VERTICALLY TO INFINITE HEIGHT PROVIDING OPENING IS PROPERLY DESIGNED BY OTHERS TO SUPPORT THE LOUVER PANELS.

SLEEVE SPLICING NOTE FOR SLEEVE MOUNTED LOUVERS:
SLEEVE MAY BE SPLICED ALONG HORIZONTAL OR VERTICAL RUNS PROVIDING SPLICE DOES NOT OCCUR WITHIN 12" OF ANY VERTICAL MULLION CENTERLINE.

CORNER & BLADE END CONSTRUCTION:
FRAME HEAD: HORIZONTAL MEMBER IS SQUARE CUT, BUTTED TO VERTICAL MEMBERS & FASTENED WITH TWO(2) NO. 7 X 1 1/4" SMS HEX HEAD SCREWS INTO THE HORIZONTAL MEMBERS SCREW SPLINES.
FRAME SILL: VERTICAL MEMBERS ARE ANGLE CUT, BUTTED TO HORIZONTAL MEMBER & FASTENED WITH TWO(2) NO. 7 X 1 1/4" SMS SCREWS INTO THE VERTICAL MEMBERS SCREW SPLINES.
BLADE END: HORIZONTAL BLADES ARE SQUARE CUT, BUTTED TO VERTICAL MEMBERS & FASTENED WITH TWO(2) NO. 7 OR NO. 8 X 1 1/4" SMS SCREWS INTO THE BLADE SCREW SPLINES.

ANCHOR REQUIREMENTS TABLE

OPENING TYPE (SUBSTRATE)	FRAME CLIP TO OPENING FASTENER TYPE	MINIMUM EMBED	MINIMUM EDGE DIST.
JAMB & NON-REINFORCED MULLION END CLIP ANCHORS			
MIN. 2X_ WOOD FRAME OR BUCK (MIN. GR. 3 & G=0.55)	NO. 14 SMS OR WOOD SCREW	1 3/8"	3/4"
MIN. 16 GA. 33 KSI METAL STUD	1/4-14 GR. 5 SELF TAP/DRILL SCREW	FULL	1/2"
MIN. 1/8" THK A36 STEEL	1/4-14 GR. 5 SELF TAP/DRILL SCREW	FULL	1/2"
MIN. 1/8" THK 6063-T5 ALUM.	1/4-14 GR. 5 SELF TAP/DRILL SCREW	FULL	1/2"
(3) MIN. C-90 CMU	(1) 1/4" CONCRETE SCREW	1 1/4"	2"
MIN. 3000 PSI CONCRETE	(1) 1/4" CONCRETE SCREW	1 1/2"	2"
TUBE MULLION END CLIP ANCHORS			
MIN. 2X_ WOOD FRAME OR BUCK (MIN. GR. 3 & G=0.55)	NO. 14 SMS OR WOOD SCREW	1 3/8"	3/4"
MIN. 16 GA. 33 KSI METAL STUD	1/4-14 GR. 5 SELF TAP/DRILL SCREW	FULL	1/2"
MIN. 1/8" THK A36 STEEL	1/4-14 GR. 5 SELF TAP/DRILL SCREW	FULL	1/2"
MIN. 1/8" THK 6063-T5 ALUM.	1/4-14 GR. 5 SELF TAP/DRILL SCREW	FULL	1/2"
3000 PSI CONCRETE	(2) 1/2" WEDGE ANCHOR	3 1/2"	3"

(1) CONCRETE SCREWS SHALL BE ELCO ULTRACONS, ITW RAMSET/RED HEAD TAPCONS OR HILTI KWIK-CON II (HARDENED STEEL OR S.S.).
(2) WEDGE ANCHORS SHALL BE HILTI STAINLESS STEEL KWIK BOLT 3
(3) CMU IS APPLICABLE AT SIDES ONLY.

GENERAL NOTES:
1. THESE LOUVER SYSTEMS HAVE BEEN TESTED, ANALYZED & APPROVED FOR DESIGN PRESSURES NOT TO EXCEED THOSE SHOWN IN THE "ALLOWABLE DESIGN PRESSURE TABLE(S).
2. OPENINGS, BUCKING & BUCKING FASTENERS MUST BE PROPERLY DESIGNED & INSTALLED TO TRANSFER WIND LOADS TO THE STRUCTURE. IT SHALL BE THE RESPONSIBILITY OF THE PERMIT HOLDER TO VERIFY THE STRUCTURAL INTEGRITY OF THE EXISTING STRUCTURE TO SUPPORT THE LOADS SUPERIMPOSED BY THE LOUVERS.
3. ALL HARDWARE & FASTENERS SHALL BE IN ACCORDANCE WITH THESE DRAWINGS & SHALL NOT VARY UNLESS SPECIFICALLY MENTIONED ON THE DRAWINGS. SPECIFIED ANCHOR EMBED TO BASE MATERIAL SHALL BE BEYOND WALL FINISH OR STUCCO.
4. THE DETAILS & SPECIFICATIONS SHOWN HEREIN REPRESENT THE PRODUCTS TESTED & PROPOSED FOR IMPACT, CYCLIC & UNIFORM STATIC AIR PRESSURE TESTING IN CONFORMANCE WITH THE FLORIDA BUILDING CODE PROTOCALS TAS-201, 202 & 203 FOR LARGE MISSILE IMPACT LOUVERS.
5. THESE LOUVER SYSTEMS HAVE BEEN DESIGNED IN ACCORDANCE WITH AND MEET THE REQUIREMENTS OF THE FLORIDA BUILDING CODE (FBC) INCLUDING HIGH VELOCITY HURRICANE ZONES (HVHZ).
6. IMPACT SHUTTERS ARE NOT REQUIRED WITH THESE LOUVER SYSTEMS.
7. ALL ANCHORS SECURING LOUVER FRAME TO PRESSURE TREATED BUCKS OR WOOD FRAMING SHALL BE CAPABLE OF RESISTING CORROSION CAUSED BY THE PRESSURE TREATING CHEMICALS IN THE WOOD.
8. DETERMINE THE POSITIVE & NEGATIVE DESIGN LOADS TO USE WHEN REFERENCING THESE DOCUMENTS IN ACCORDANCE WITH THE GOVERNING CODE AND GOVERNING WIND VELOCITY. FOR WIND LOAD CALCULATIONS IN ACCORDANCE WITH THE FLORIDA BUILDING CODE, A DIRECTIONALITY FACTOR OF Kd = 0.85 MAY BE APPLIED PER THE ASCE-7 STANDARD.
9. NO INCREASE IN ALLOWABLE STRESS HAS BEEN USED IN THE CERTIFICATION OF THIS PRODUCT. WIND LOAD DURATION FACTOR Cd = 1.6 WAS USED FOR WOOD SCREW ANALYSIS ONLY.
10. MATERIALS, INCLUDING BUT NOT LIMITED TO STEEL SCREWS, THAT COME INTO CONTACT WITH OTHER DISSIMILAR MATERIALS SHALL MEET THE REQUIREMENTS OF FLORIDA BUILDING CODE CHAPTER 20.
11. EACH LOUVER ASSEMBLY SHALL BE PERMANENTLY LABELED AS FOLLOWS:
ARROW UNITED INDUSTRIES
WYALUSING, PA
MIAMI-DADE COUNTY PRODUCT CONTROL APPROVED
12. THESE LOUVERS ARE NOT TESTED FOR WATER INFILTRATION RESISTANCE, THEREFORE THE LOUVERS ARE TO BE INSTALLED IN A LOCATION WHERE THE ROOM BEHIND THE LOUVER IS DESIGNED TO DRAIN WATER PENETRATING INTO THE ROOM, AND THE ROOM WILL HOUSE WATER RESISTANT/WATER PROOF EQUIPMENT, COMPONENTS OR SUPPLIES.
13. MULLED PANELS MAY BE HORIZONTALLY INSTALLED TO AN UNLIMITED NUMBER. VERTICAL STACKING OF MULLED PANELS MAY OCCUR PROVIDING A STRUCTURAL SUPPORT IS DESIGNED & INSTALLED BY OTHERS TO SUPPORT ALL LOADS TRANSFERED FROM THE LOUVER ASSEMBLY (SINGLE PANELS MAY RUN TO UNLIMITED HEIGHT PER ELEVATION IF NO MULLION EXISTS).

PRODUCT REVISED
as complying with the Florida Building Code
NOA-No. 17-0713.05
Expiration Date 01/06/2020
By
Miami-Dade Product Control

WARREN W. SCHAEFER * STATE OF FLORIDA * P.E. NO. 44135 * PROFESSIONAL ENGINEER

JUL 05 2017

WARREN W. SCHAEFER, P.E.
P.E. NO. 44135

THESE DRAWINGS ARE APPLICABLE ONLY TO THE PRODUCT SPECIFIED. THEY MAY NOT BE USED FOR THE ASSEMBLY AND/OR INSTALLATION OF ANY OTHER PRODUCT NOR MAY THEY BE USED FOR RATIONAL AND/OR LOCAL APPROVAL OF ANY PRODUCT NOT PRODUCED BY THE MANUFACTURER STATED ON THESE DRAWINGS.

DRAWN BY: W.R.M. | CHECKED BY: W.W.S.
PLOT: 1=24 | DATE: 07/23/09

NO.	REVISION DESCRIPTION	BY	DATE
A1	UPDATE CONSULTANTS & MANUFACTURERS ADDRESS	W.R.M.	11/08/11
B1	MANUFACTURER NAME CHANGE	W.W.S.	07/05/17

MANUFACTURER
ARROW UNITED INDUSTRIES;
A DIVISION OF MESTEK, INC.
450 RIVERSIDE DRIVE
WYALUSING, PA 18853
570-746-1888

DRAWING TITLE
EA-52 IMPACT LOUVER SYSTEM

CONSULTANTS
W. W. SCHAEFER ENGINEERING & CONSULTING, P.A. (CA 6809)
7480 150TH COURT NORTH
PALM BEACH GARDENS, FL. 33418
PHONE: 561-744-3424

CERTIFICATION

DRAWING NO. 1685 | REV. B
SHEET NO. 1 OF 10

MULLION ALLOWABLE DESIGN PRESSURE (NON–ARCHITECTURAL LOUVERS)

MAXIMUM MULLION SPAN (IN.)	MAXIMUM LOAD WIDTH (IN.)	ALLOWABLE PRESSURE (+/– PSF) WITH NO TUBE MULLION	WITH 4"X3"X3/16" TUBE MULLION	WITH 4"X3"X1/4" TUBE MULLION
120	60	30.6	46.1	61.4
	54	34.0	51.2	68.3
	48	38.3	57.6	76.8
	42	43.7	65.8	87.8
	36	51.0	76.8	102.4
	30	61.2	92.2	120.0
	24	76.5	115.2	120.0
	18	102.0	120.0	120.0
108	60	42.0	63.2	84.3
	54	46.6	70.2	93.6
	48	52.5	79.0	105.3
	42	60.0	90.3	120.0
	36	70.0	105.3	120.0
	30	84.0	120.0	120.0
	24	104.9	120.0	120.0
	18	120.0	120.0	120.0
96	60	56.3	90.0	120.0
	54	62.5	100.0	120.0
	48	70.3	112.5	120.0
	42	80.4	120.0	120.0
	36	93.8	120.0	120.0
	30	112.5	120.0	120.0
	24	120.0	120.0	120.0
84	60	64.3	120.0	120.0
	54	71.4	120.0	120.0
	48	80.4	120.0	120.0
	42	91.8	120.0	120.0
	36	107.1	120.0	120.0
	30	120.0	120.0	120.0
72	60	75.0	120.0	120.0
	54	83.3	120.0	120.0
	48	93.8	120.0	120.0
	42	107.1	120.0	120.0
	36	120.0	120.0	120.0
60	60	90.0	120.0	120.0
	54	100.0	120.0	120.0
	48	112.5	120.0	120.0
	42	120.0	120.0	120.0
48	60	112.5	120.0	120.0
	54	120.0	120.0	120.0
42	60	120.0	120.0	120.0

NOTES:
1. SEE ELEVATION FOR DIMENSIONING OF LOAD WIDTH.
2. ALLOWABLE UNIT PRESSURE SHALL BE THE LESSER OF THE PRESSURE SHOWN IN THIS TABLE & THAT SPECIFIED FOR THE INDIVIDUAL LOUVER PANEL.

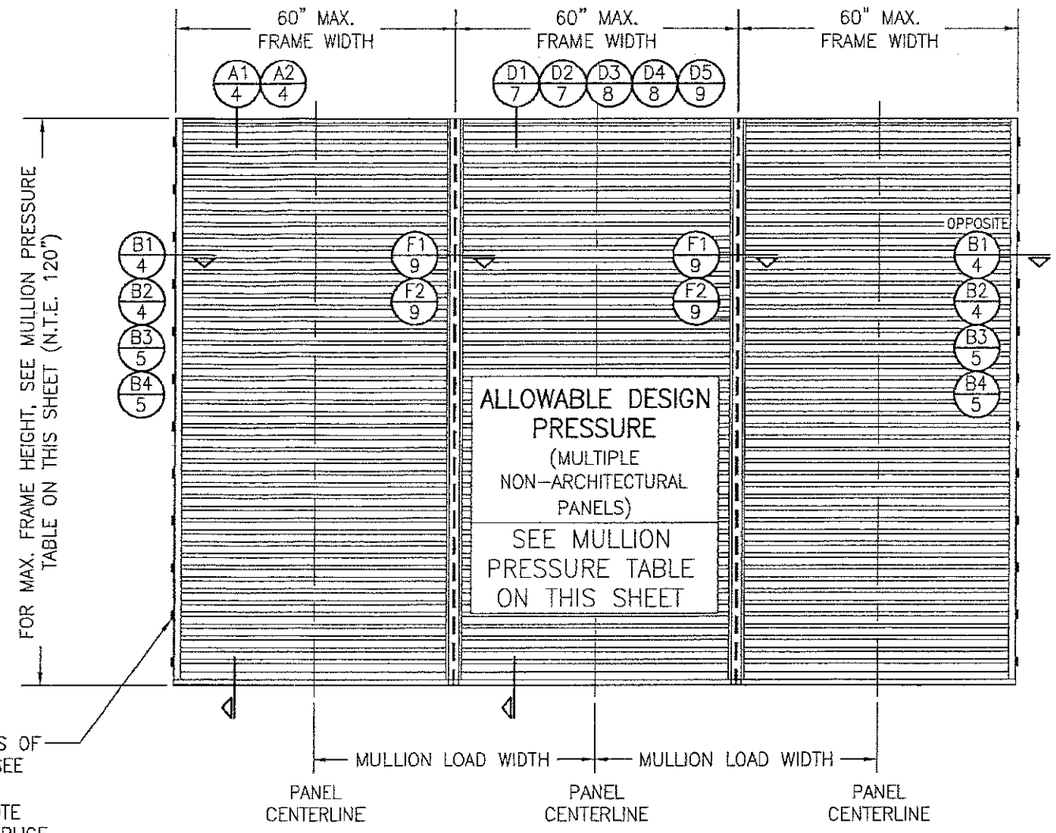

EXTERIOR ELEVATION;
MULITPLIE LOUVER PANELS
(NON–ARCHITECTURAL)

SCALE: 1/2" = 1'–0"

(3 PANEL UNIT SHOWN; MORE THAN 3 PANELS MAY BE MULLED/STACKED HORIZONTALLY)

PRODUCT REVISED
as complying with the Florida Building Code
NOA–No. 17-0713.05
Expiration Date 01/06/2020
By
Miami–Dade Product Control

WARREN W. SCHAEFER P.E. LICENSE NO. 44135 STATE OF FLORIDA REGISTERED PROFESSIONAL ENGINEER

DRAWN BY: W.R.M.	CHECKED BY: W.W.S.
PLOT: 1=24	DATE: 07/23/08

NO.	REVISION DESCRIPTION	BY	DATE

DRAWING TITLE
EA–52 IMPACT LOUVER SYSTEM

MANUFACTURER
ARROW UNITED INDUSTRIES;
A DIVISION OF MESTEK, INC.
450 RIVERSIDE DRIVE
WYALUSING, PA 18853
570–746–1888

CONSULTANTS
W. W. SCHAEFER ENGINEERING & CONSULTING, P.A. (CA 6809)
7480 150TH COURT NORTH
PALM BEACH GARDENS, FL 33418
PHONE: 561–744–3424

CERTIFICATION
JUL 05 2017
WARREN W. SCHAEFER, P.E.
P.E. NO. 44135

DRAWING NO. 1685
REV. B
SHEET NO. 2 OF 10

MULLION ALLOWABLE DESIGN PRESSURE (ARCHITECTURAL LOUVERS)

MAXIMUM MULLION SPAN (IN.)	MAXIMUM LOAD WIDTH (IN.)	ALLOWABLE PRESSURE (+/− PSF)
120	60	61.4
	54	68.3
	48	76.8
	42	87.8
	36	102.4
	30	120.0
108	60	84.3
	54	93.6
	48	105.3
	42	120.0
96	60	120.0

NOTES:
1. SEE ELEVATION FOR DIMENSIONING OF LOAD WIDTH.
2. ALLOWABLE UNIT PRESSURE SHALL BE THE LESSER OF THE PRESSURE SHOWN IN THIS TABLE & THAT SPECIFIED FOR THE INDIVIDUAL LOUVER PANEL.

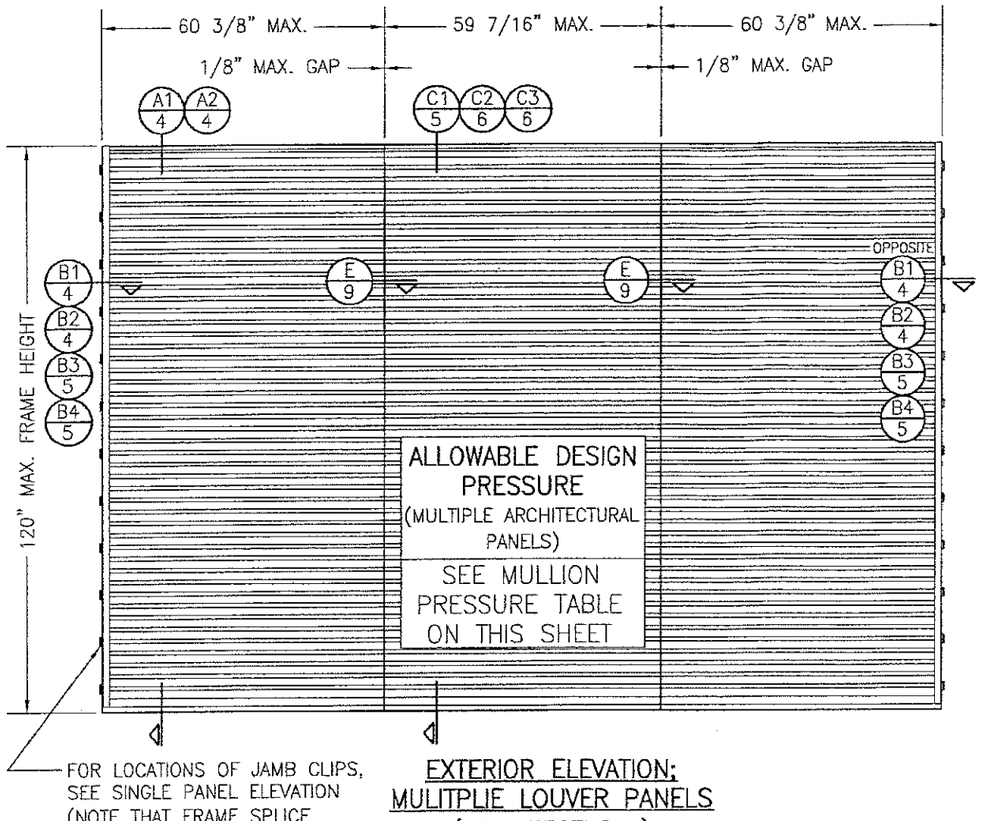

FOR LOCATIONS OF JAMB CLIPS, SEE SINGLE PANEL ELEVATION (NOTE THAT FRAME SPLICE DOES NOT APPLY TO MULLED UNITS)

EXTERIOR ELEVATION;
MULITPLIE LOUVER PANELS
(ARCHITECTURAL)
SCALE: 1/2" = 1'-0"

(3 PANEL UNIT SHOWN; MORE THAN 3 PANELS MAY BE MULLED/STACKED HORIZONTALLY)

PRODUCT REVISED
as complying with the Florida Building Code
NOA-No. 17-0713.05
Expiration Date 01/06/2020
By
Miami-Dade Product Control

WARREN W. SCHAEFER P.E. LICENSE NO. 44135 STATE OF FLORIDA PROFESSIONAL ENGINEER

DRAWN BY: W.R.M. | CHECKED BY: W.W.S.
PLOT: 1=24 | DATE: 07/23/09

NO.	REVISION DESCRIPTION	BY	DATE

DRAWING TITLE
EA-52 IMPACT LOUVER SYSTEM

MANUFACTURER
ARROW UNITED INDUSTRIES;
A DIVISION OF MESTEK, INC.
450 RIVERSIDE DRIVE,
WYALUSING, PA 18853
570-746-1888

CONSULTANTS
W. W. SCHAEFER ENGINEERING & CONSULTING, P.A. (CA 6809)
7480 150TH COURT NORTH
PALM BEACH GARDENS, FL 33418
PHONE: 561-744-3424

CERTIFICATION
JUL 05 2017
WARREN W. SCHAEFER P.E. P.E. NO. 44135

DRAWING NO. 1685 | REV. B
SHEET NO. 3 OF 10

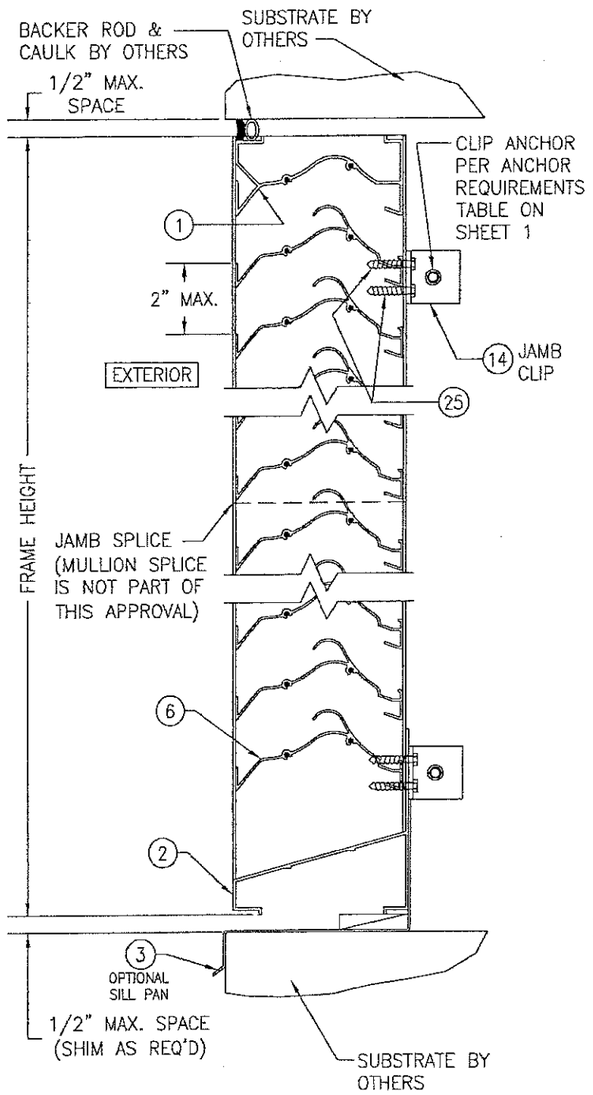

SECTION A1/4
SCALE: 1/2 FULL

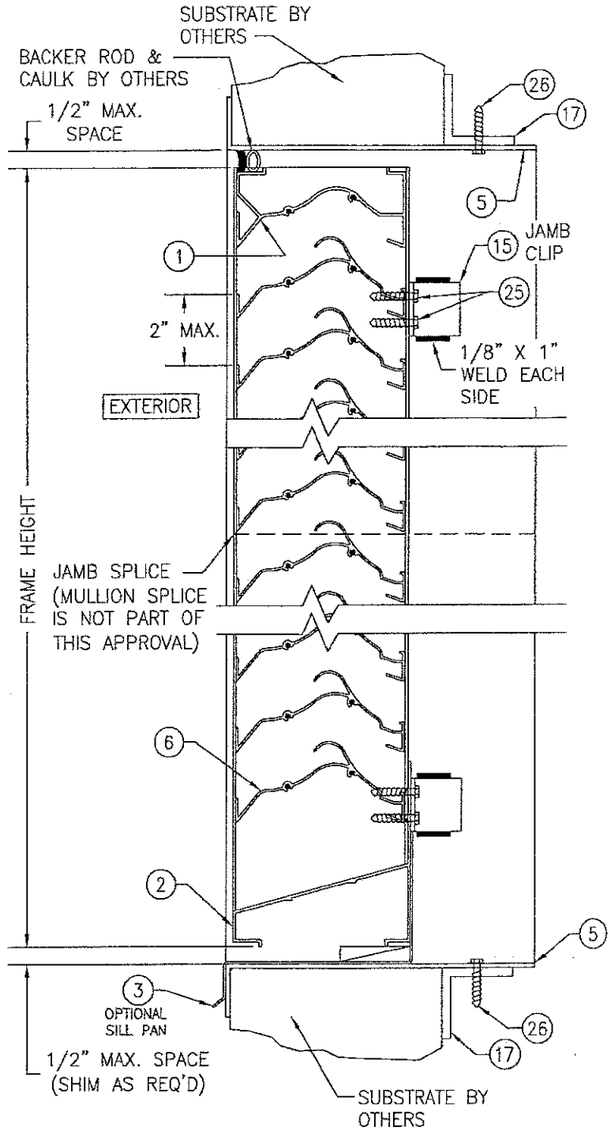

SECTION A2/4
SCALE: 1/2 FULL

(SLEEVE MOUNT)

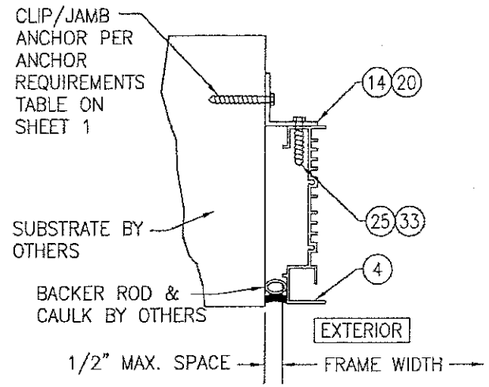

SECTION B1/4
SCALE: 1/2 FULL

(NO SLEEVE & CLIPS TURNED OUT)

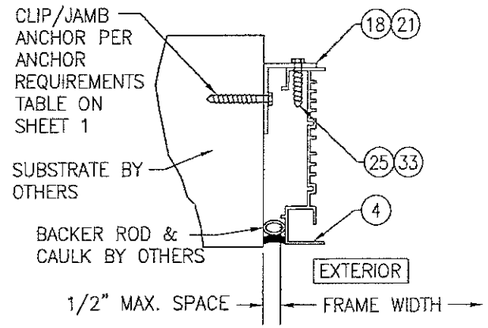

SECTION B2/4
SCALE: 1/2 FULL

(NO SLEEVE & CLIPS TURNED IN)

PRODUCT REVISED
as complying with the Florida Building Code
NOA-No. 17-0713.05
Expiration Date 01/06/2020
By
Miami-Dade Product Control

DRAWN BY: W.R.M.	CHECKED BY: W.W.S.
PLOT: 1=4	DATE: 07/23/09

NO.	REVISION DESCRIPTION	BY	DATE

MANUFACTURER
ARROW UNITED INDUSTRIES;
A DIVISION OF MESTEK, INC.
450 RIVERSIDE DRIVE
WYALUSING, PA 18853
570-746-1888

CONSULTANTS
W. W. SCHAEFER ENGINEERING & CONSULTING, P.A. (CA 6809)
7480 150TH COURT NORTH
PALM BEACH GARDENS, FL 33418
PHONE: 561-744-3424

DRAWING TITLE
EA-52 IMPACT LOUVER SYSTEM

CERTIFICATION
JUL 05 2017
WARREN W. SCHAEFER, P.E.
P.E. NO. 44135

DRAWING NO. 1685
REV. B
SHEET NO. 4 OF 10

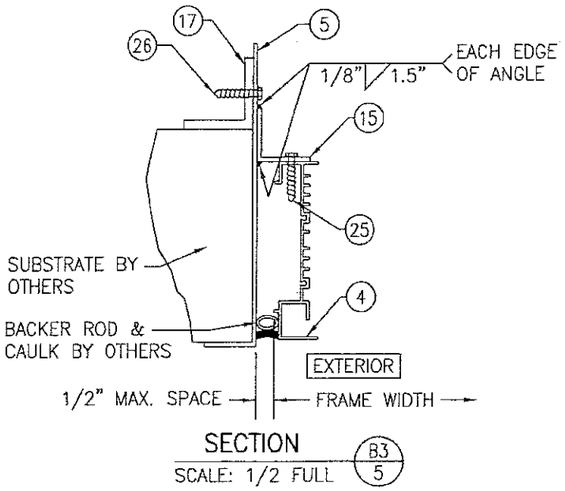

SECTION B3 / 5
SCALE: 1/2 FULL

(WITH SLEEVE & CLIPS TURNED OUT)

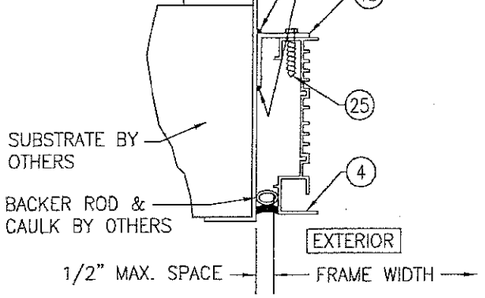

SECTION B4 / 5
SCALE: 1/2 FULL

(WITH SLEEVE & CLIPS TURNED IN)

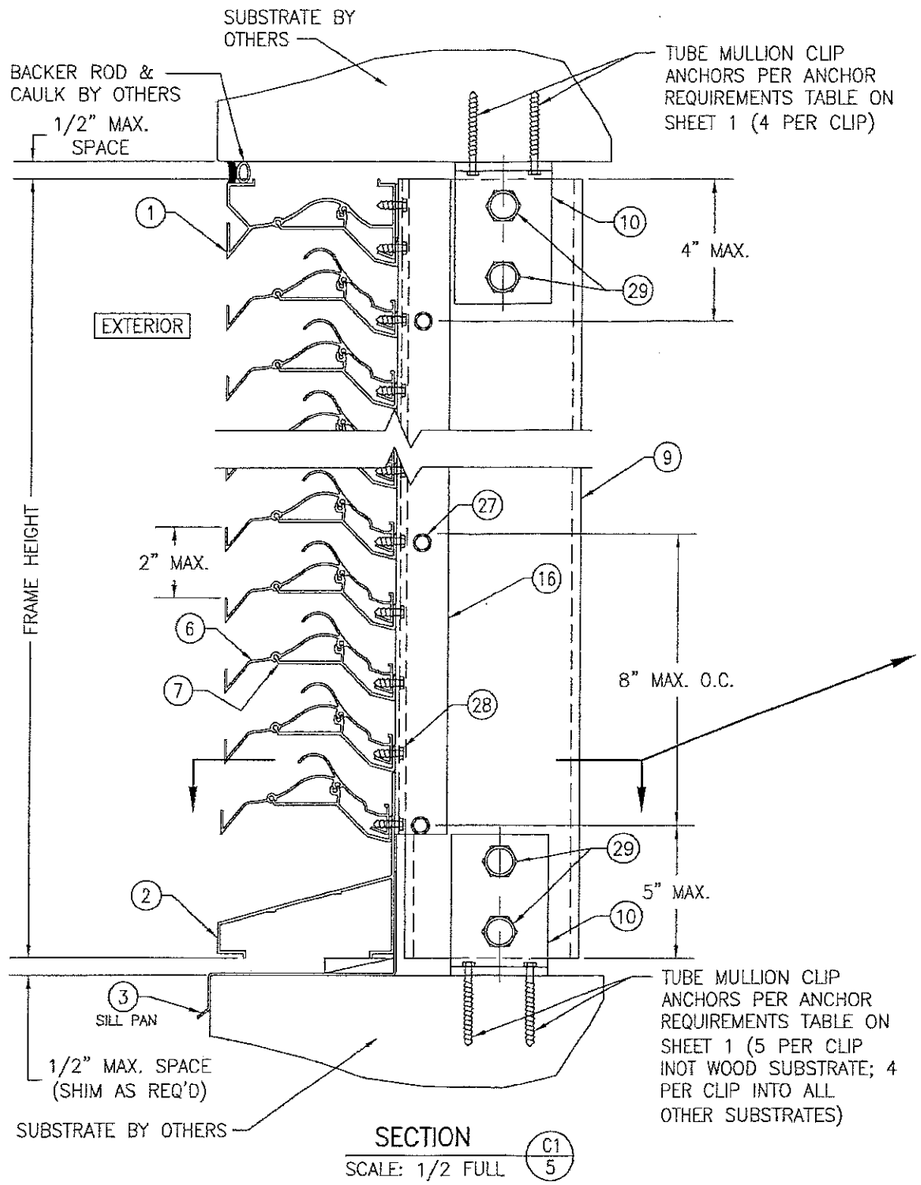

SECTION C1 / 5
SCALE: 1/2 FULL

(ARCHITECTURAL LOUVER WITHOUT PERIMETER SLEEVE; INSTALLED INTO WOOD, STEEL, ALUMINUM, OR METAL STUD SUBSTRATE)

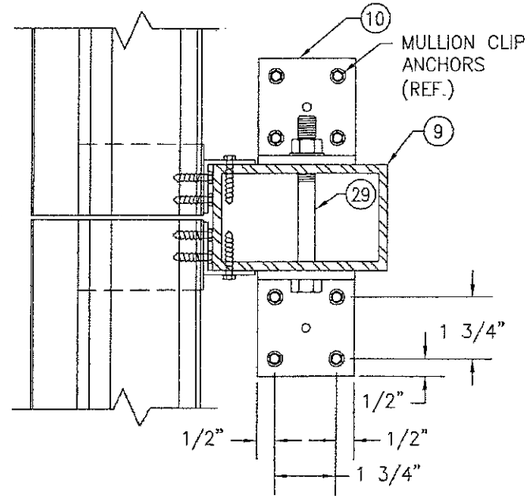

(FOR DETAIL NOT SHOWN, SEE SECTION E/9)

PRODUCT REVISED
as complying with the Florida Building Code
NOA-No. 17-0713.05
Expiration Date 01/06/2020
By
Miami-Dade Product Control

WARREN W. SCHAEFER P.E. LICENSE NO. 44135 STATE OF FLORIDA *PROFESSIONAL ENGINEER*

DRAWN BY: W.R.M.	CHECKED BY: W.W.S.
PLOT: 1=4	DATE: 07/23/09

NO.	REVISION DESCRIPTION	BY	DATE

DRAWING TITLE: EA-52 IMPACT LOUVER SYSTEM

MANUFACTURER
ARROW UNITED INDUSTRIES;
A DIVISION OF MESTEK, INC.
450 RIVERSIDE DRIVE
WYALUSING, PA 18853
570-746-1888

CONSULTANTS
W. W. SCHAEFER ENGINEERING & CONSULTING, P.A. (CA 6809)
7480 150TH COURT NORTH
PALM BEACH GARDENS, FL 33418
PHONE: 561-744-3424

CERTIFICATION
JUL 05 2017
WARREN W. SCHAEFER, P.E.
P.E. NO. 44135

DRAWING NO. 1685 | REV. B
SHEET NO. 5 OF 10

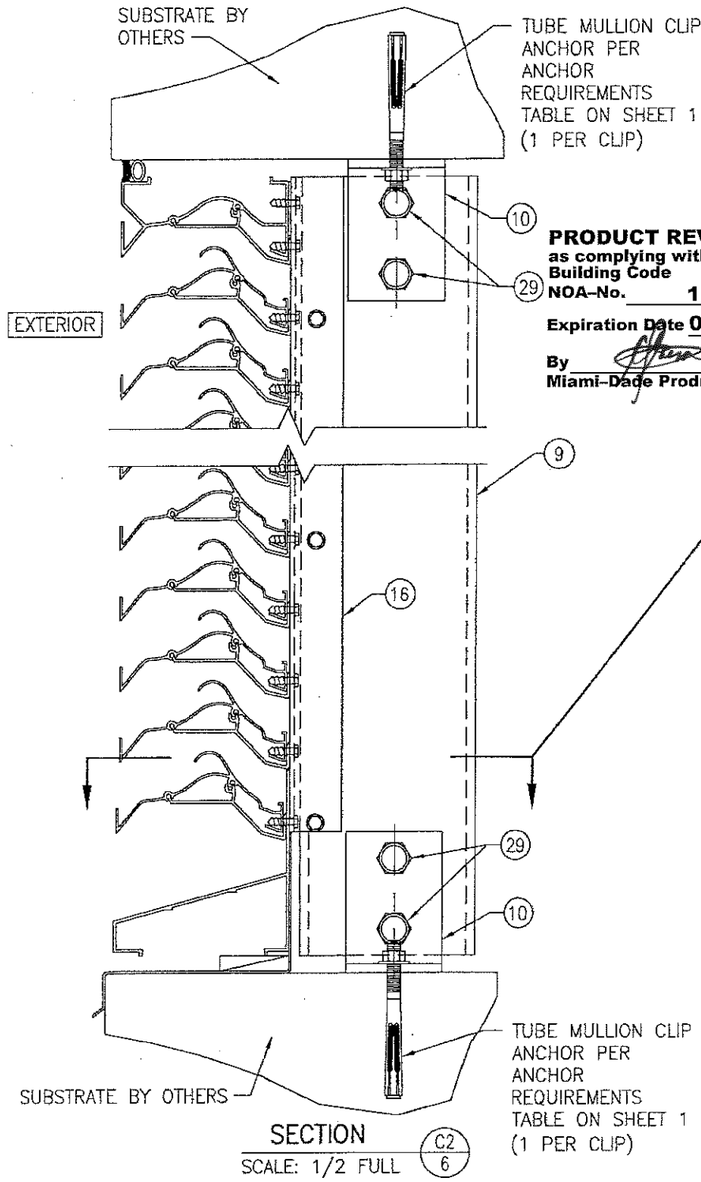

SECTION C2 / 6
SCALE: 1/2 FULL

(ARCHITECTURAL LOUVER WITHOUT PERIMETER SLEEVE; INSTALLED INTO CONCRETE SUBSTRATE)
(FOR DETAIL NOT SHOWN, SEE SECTION C1/5)

PRODUCT REVISED
as complying with the Florida Building Code
NOA-No. 17-0713.05
Expiration Date 01/06/2020
By
Miami-Dade Product Control

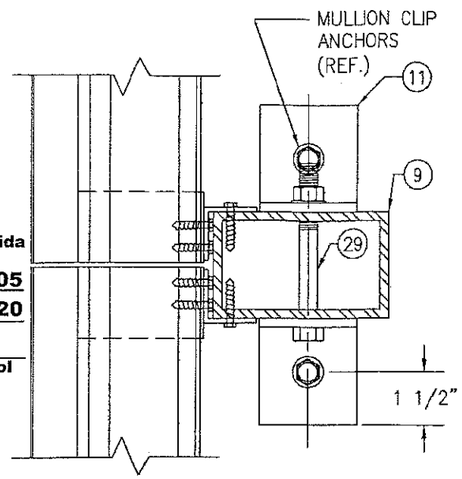

(FOR DETAIL NOT SHOWN, SEE SECTION E/9)

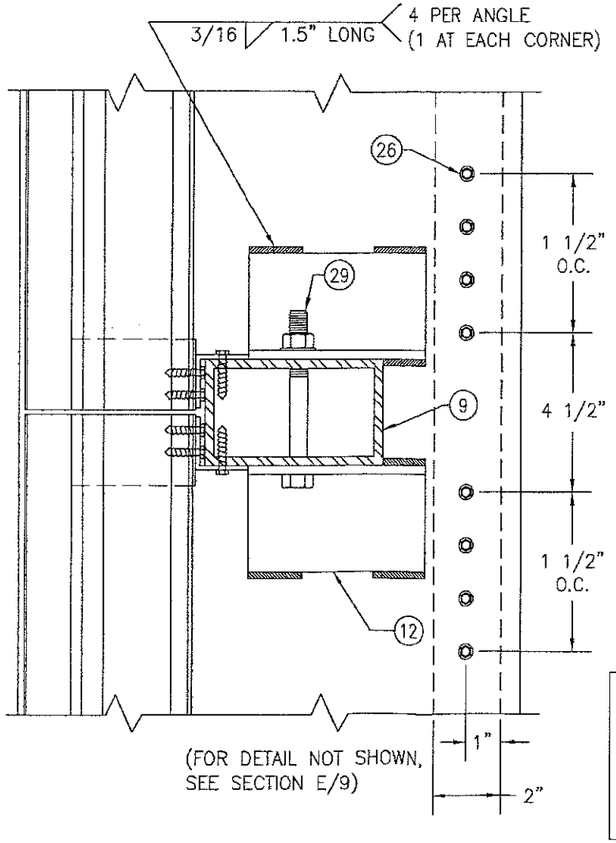

(FOR DETAIL NOT SHOWN, SEE SECTION E/9)

POSITION OF THE SLEEVE PERIMETER SUPPORT ANGLE VARIES WITH SUBSTRATE THICKNESS & MAY BE POSITIONED UNDER THE MULLION END SUPPORT ANGLE. WHEN THIS OCCURS, THE SLEEVE ANGLE ATTACHMNENT SCREWS SHALL MOVE WITH THE ANGLE & MAY BE POSITIONED TO RUN THROUGH THE MULLION END ANGLE AND SLEEVE.

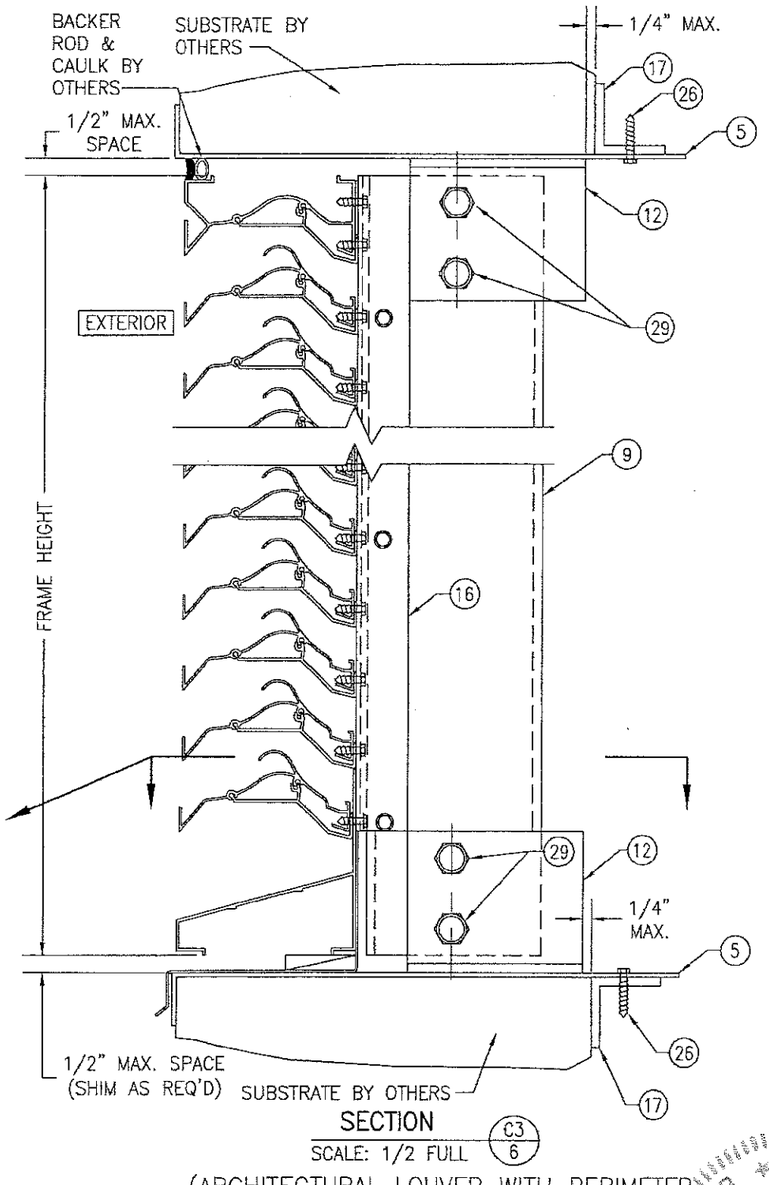

SECTION C3 / 6
SCALE: 1/2 FULL

(ARCHITECTURAL LOUVER WITH PERIMETER SLEEVE; INSTALLED INTO ALL SUBSTRATES)
(FOR DETAIL NOT SHOWN, SEE SECTION C1/5)

NO.	REVISION DESCRIPTION	BY	DATE

DRAWN BY: W.R.M. | CHECKED BY: W.W.S.
PLOT: 1=4 | DATE: 07/23/09

DRAWING TITLE: EA-52 IMPACT LOUVER SYSTEM

MANUFACTURER
ARROW UNITED INDUSTRIES;
A DIVISION OF MESTEK, INC.
450 RIVERSIDE DRIVE
WYALUSING, PA 18853
570-746-1888

CONSULTANTS
W. W. SCHAEFER ENGINEERING & CONSULTING, P.A. (CA 6809)
7480 150TH COURT NORTH
PALM BEACH GARDENS, FL 33418
PHONE: 561-744-3424

CERTIFICATION
WARREN W. SCHAEFER P.E.
P.E. NO. 44135
JUL 05 2017

DRAWING NO. 1685 | REV. B
SHEET NO. 6 OF 10

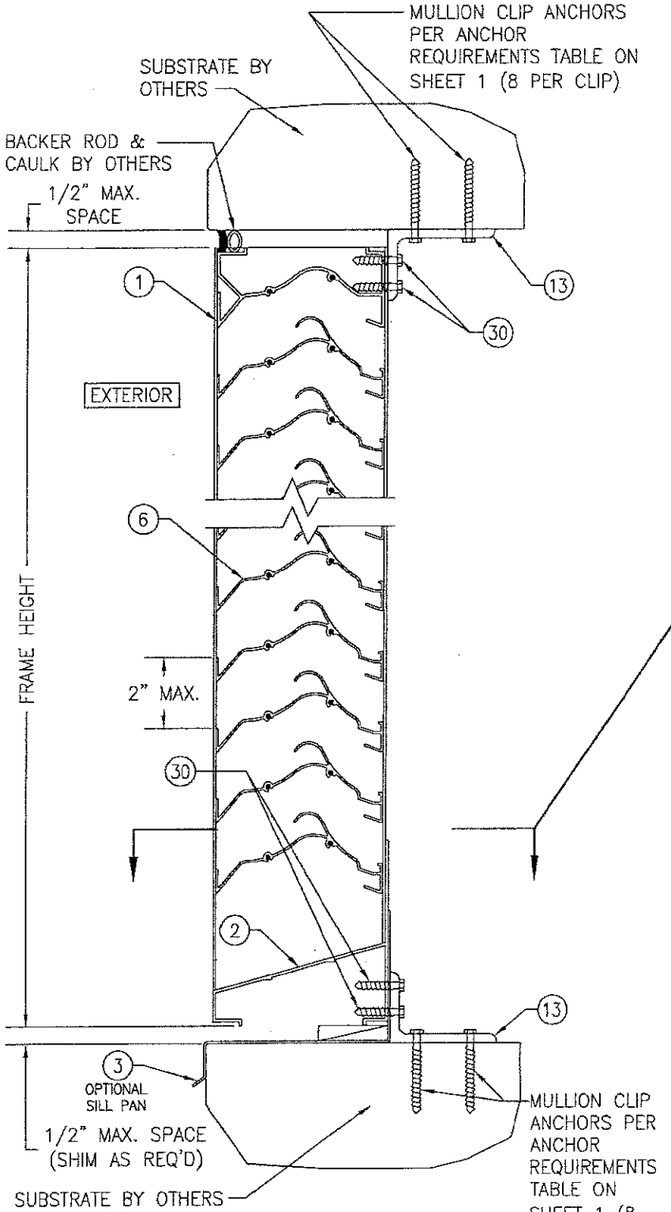

SECTION D1/7
SCALE: 1/2 FULL

(NON-ARCHITECTURAL LOUVER WITHOUT PERIMETER SLEEVE & WITHOUT TUBE MULLION; INSTALLED INTO ALL SUBSTRATES)

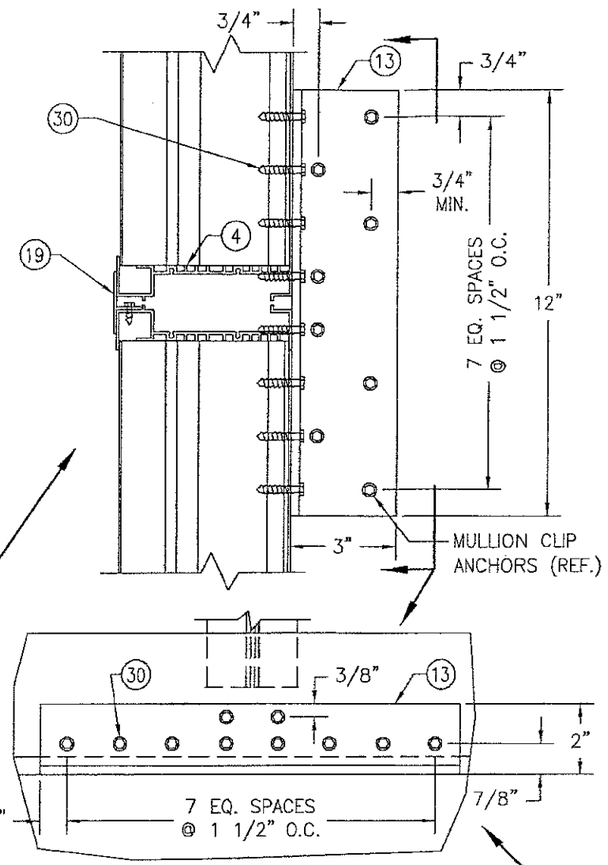

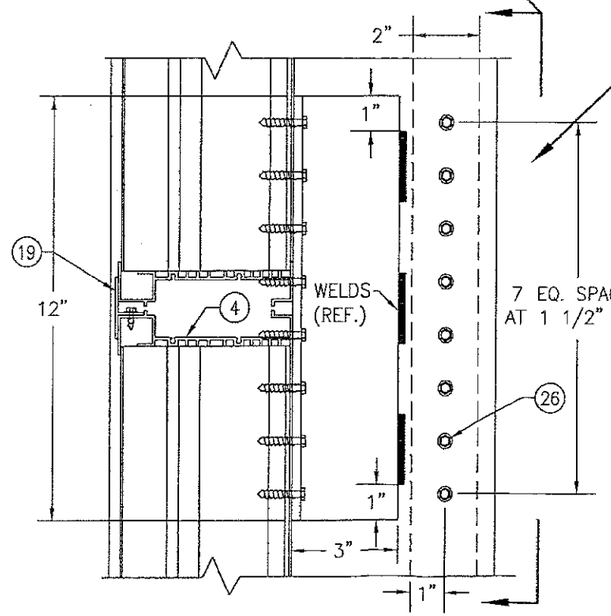

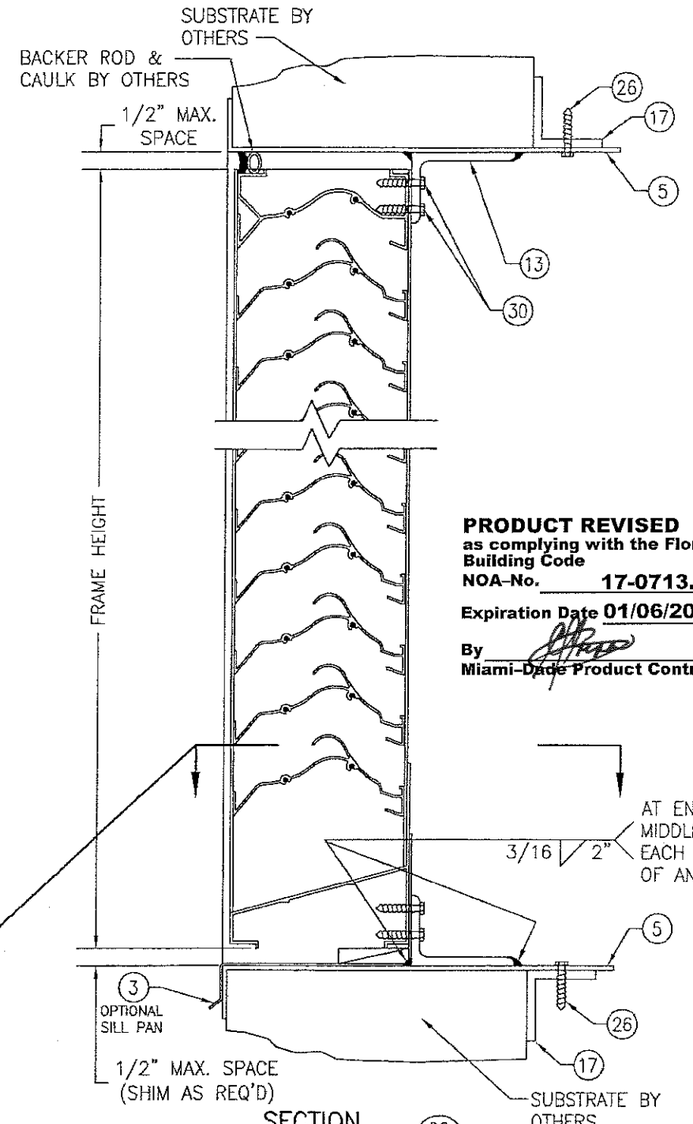

SECTION D2/7
SCALE: 1/2 FULL

(NON-ARCHITECTURAL LOUVER WITH PERIMETER SLEEVE & WITHOUT TUBE MULLION; INSTALLED INTO ALL SUBSTRATES)
(FOR DETAIL NOT SHOWN, SEE SECTION D1/7)

POSITION OF THE SLEEVE PERIMETER SUPPORT ANGLE VARIES WITH SUBSTRATE THICKNESS & MAY BE POSITIONED UNDER THE MULLION END SUPPORT ANGLE. WHEN THIS OCCURS, THE SLEEVE ANGLE ATTACHMNENT SCREWS SHALL MOVE WITH THE ANGLE & MAY BE POSITIONED TO RUN THROUGH THE MULLION END ANGLE AND SLEEVE.

PRODUCT REVISED
as complying with the Florida Building Code
NOA-No. 17-0713.05
Expiration Date 01/06/2020
By
Miami-Dade Product Control

DRAWN BY: W.R.M. | CHECKED BY: W.W.S.
PLOT: 1=4 | DATE: 07/23/09

NO.	REVISION DESCRIPTION	BY	DATE

MANUFACTURER
ARROW UNITED INDUSTRIES;
A DIVISION OF MESTEK, INC.
450 RIVERSIDE DRIVE
WYALUSING, PA 18853
570-746-1888

CONSULTANTS
W. W. SCHAEFER ENGINEERING & CONSULTING, P.A. (CA 6809)
7480 150TH COURT NORTH
PALM BEACH GARDENS, FL 33418
PHONE: 561-744-3424

DRAWING TITLE
EA-52 IMPACT LOUVER SYSTEM

CERTIFICATION
WARREN W. SCHAEFER, P.E.
P.E. NO. 44135
JUL 05 2017

DRAWING NO. 1685 | REV. B
SHEET NO. 7 OF 10

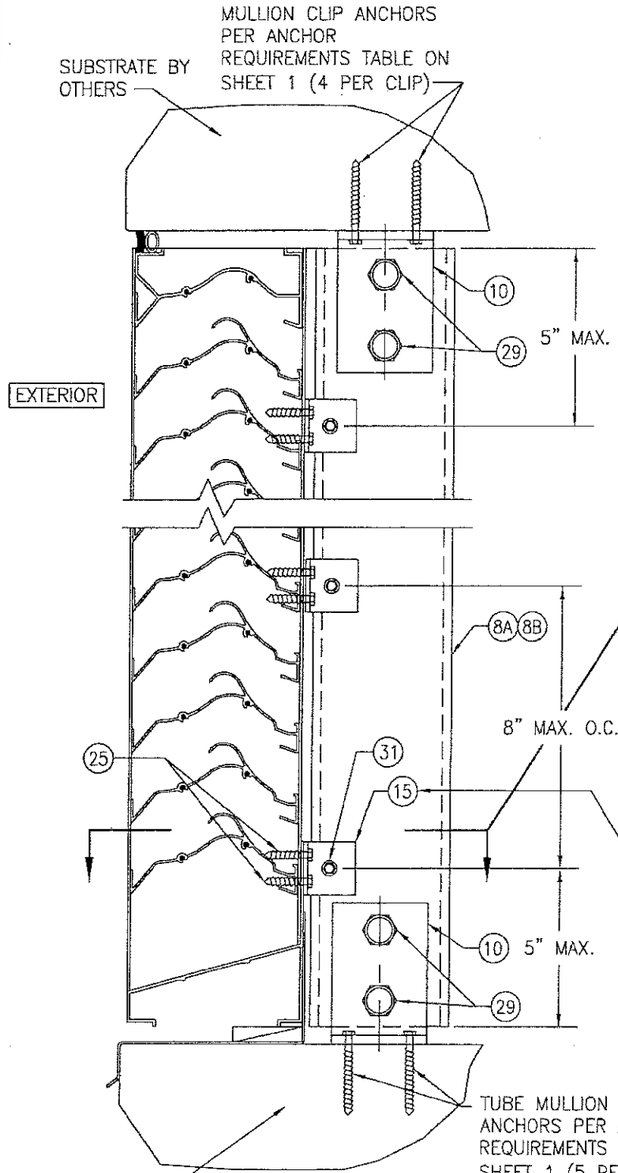

SECTION D3/8
SCALE: 1/2 FULL

(NON-ARCHITECTURAL LOUVER WITHOUT PERIMETER SLEEVE & WITH TUBE MULLION; INSTALLED INTO WOOD, STEEL, ALUMINUM & METAL STUD SUBSTRATES)

(FOR DETAIL NOT SHOWN, SEE SECTION D1/7)

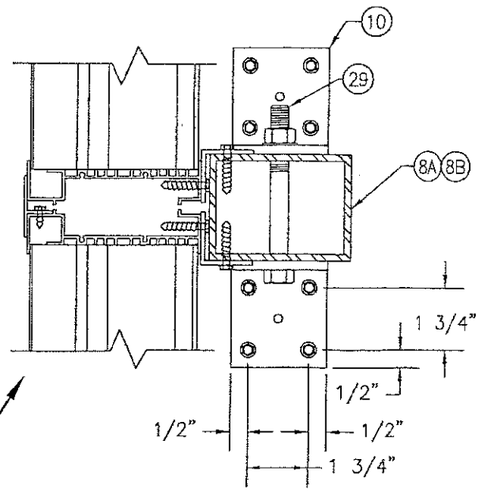

(FOR DETAIL NOT SHOWN, SEE SECTION F1/9)

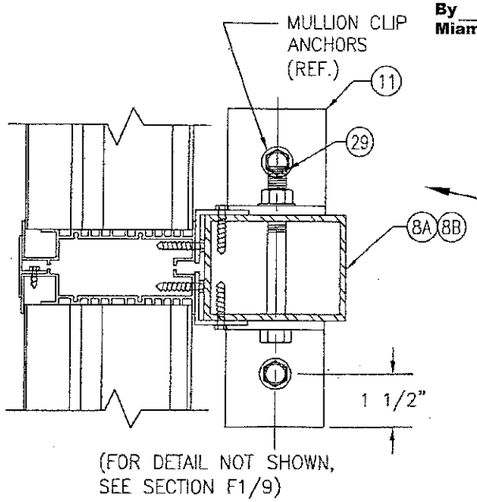

(FOR DETAIL NOT SHOWN, SEE SECTION F1/9)

OPTION: USE A CONTINUOUS 1 1/2" X 1 1/2" X 1/8" 6063-T5 ALUMINUM ANGLE IN LIEU OF INDIVIDUAL ANGLES PART #15. ATTACH CONTINUOUS ANGLE TO TUBE MULLION WITH 1/4-14 X 3/4" SELFTAP/DRILL SCREW WITHIN 5" OF TUBE ENDS & 8" MAX. O.C. ATTACH CONTINUOUS ANGLE TO LOUVER FRAME WITH 1/4-14 X 3/4" SELF TAP/DRILL SCREWS WITHIN 5" OF FRAME ENDS & 4" O.C.

PRODUCT REVISED
as complying with the Florida Building Code
NOA-No. 17-0713.05
Expiration Date 01/06/2020
By
Miami-Dade Product Control

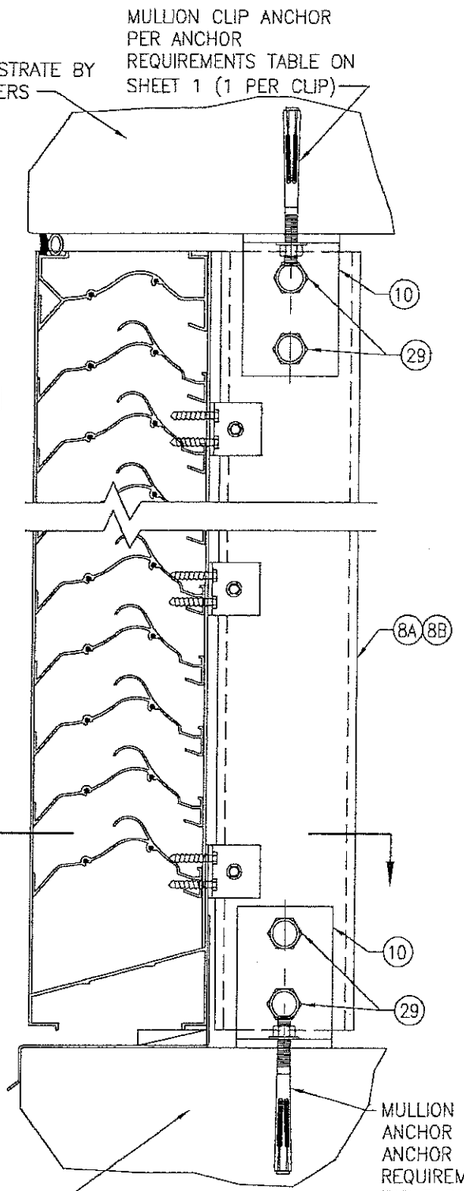

SECTION D4/8
SCALE: 1/2 FULL

(NON-ARCHITECTURAL LOUVER WITHOUT PERIMETER SLEEVE & WITH TUBE MULLION; INSTALLED INTO CONCRETE SUBSTRATE)

(FOR DETAIL NOT SHOWN, SEE SECTION D3/8)

DRAWN BY: W.R.M.	CHECKED BY: W.W.S.
PLOT: 1=4	DATE: 07/23/09

NO.	REVISION DESCRIPTION	BY	DATE

DRAWING TITLE: EA-52 IMPACT LOUVER SYSTEM

MANUFACTURER: ARROW UNITED INDUSTRIES; A DIVISION OF MESTEK, INC.
450 RIVERSIDE DRIVE
WYALUSING, PA 18853
570-746-1888

CONSULTANTS: W. W. SCHAEFER ENGINEERING & CONSULTING, P.A. (CA 6809)
7480 150TH COURT NORTH
PALM BEACH GARDENS, FL 33418
PHONE: 561-744-3424

CERTIFICATION

WARREN W. SCHAEFER, P.E.
P.E. NO. 44135

JUL 05 2017

DRAWING NO. 1685
REV. B
SHEET NO. 8 OF 10

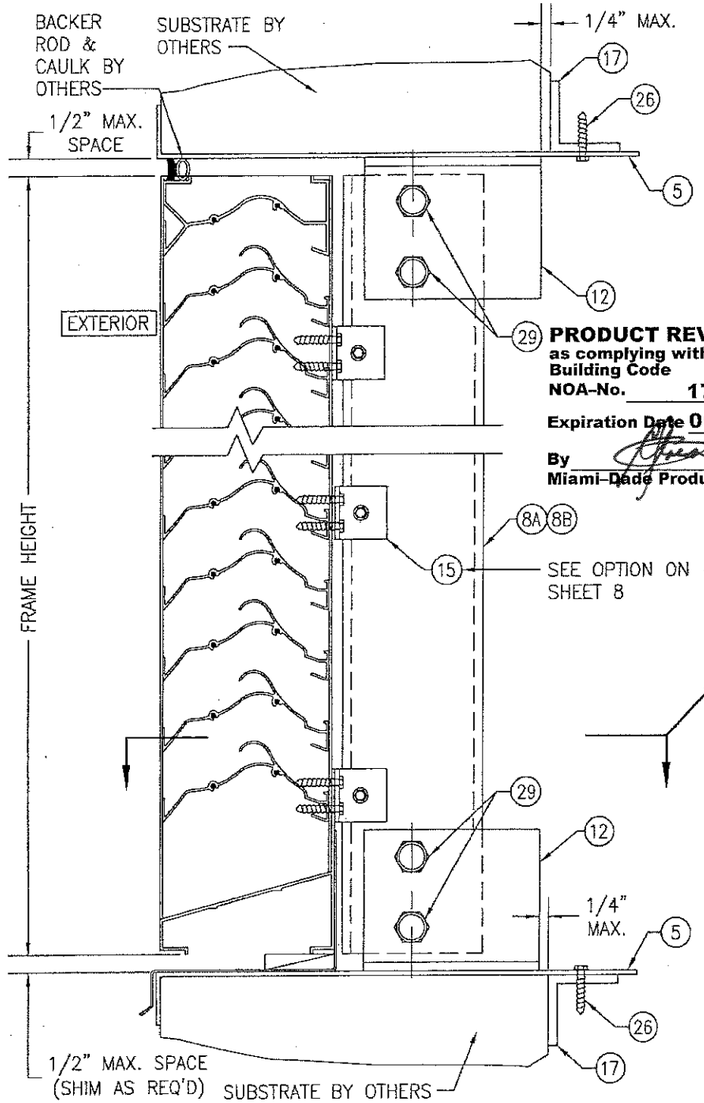

SECTION D5/9
SCALE: 1/2 FULL

(NON-ARCHITECTURAL LOUVER WITH PERIMETER SLEEVE & WITH TUBE MULLION; INSTALLED INTO ALL SUBSTRATES)

(FOR DETAIL NOT SHOWN, SEE SECTION D3/8)

POSITION OF THE SLEEVE PERIMETER SUPPORT ANGLE VARIES WITH SUBSTRATE THICKNESS & MAY BE POSITIONED UNDER THE MULLION END SUPPORT ANGLE. WHEN THIS OCCURS, THE SLEEVE ANGLE ATTACHMNENT SCREWS SHALL MOVE WITH THE ANGLE & MAY BE POSITIONED TO RUN THROUGH THE MULLION END ANGLE AND SLEEVE.

PRODUCT REVISED
as complying with the Florida Building Code
NOA-No. 17-0713.05
Expiration Date 01/06/2020
By
Miami-Dade Product Control

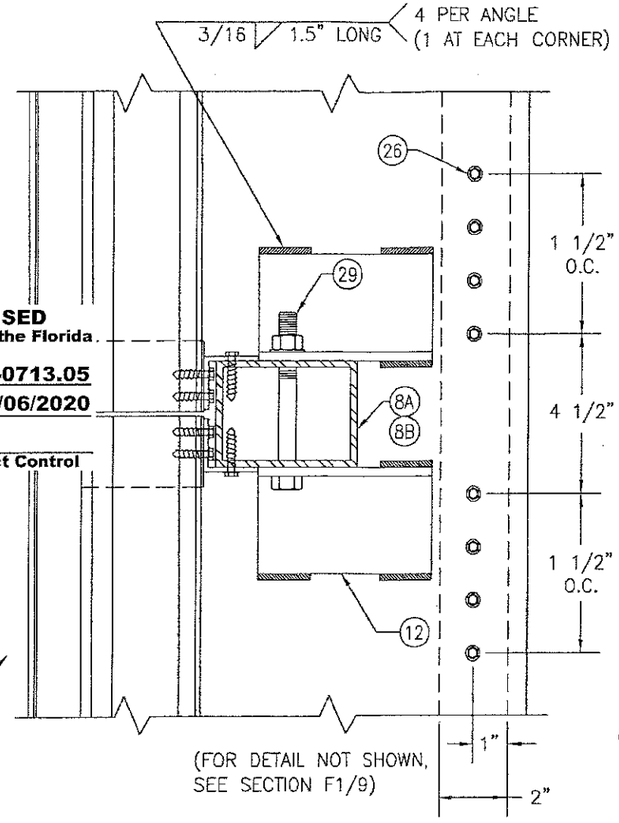

(FOR DETAIL NOT SHOWN, SEE SECTION F1/9)

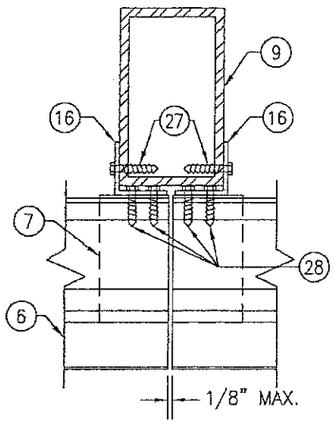

SECTION E/9
SCALE: 1/2 FULL

(ARCHITECTURAL LOUVER MULLION)

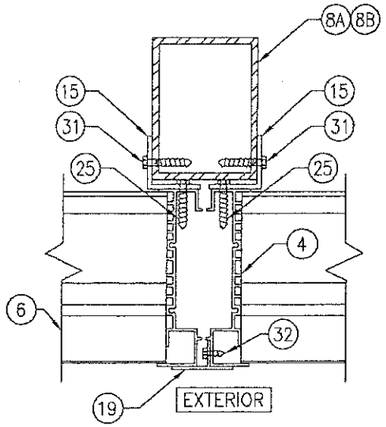

SECTION F1/9
SCALE: 1/2 FULL

(NON-ARCHITECTURAL LOUVER WITH TUBE MULLION)

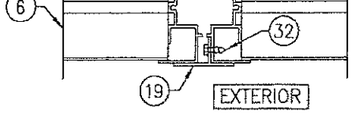

SECTION F2/9
SCALE: 1/2 FULL

(NON-ARCHITECTURAL LOUVER WITH NO TUBE MULLION)

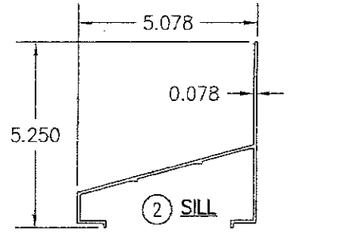

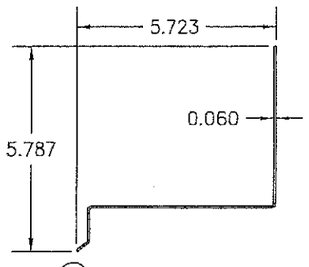

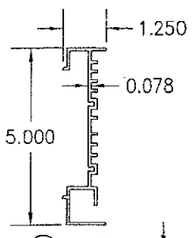

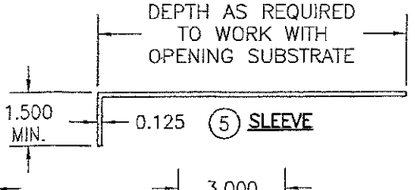

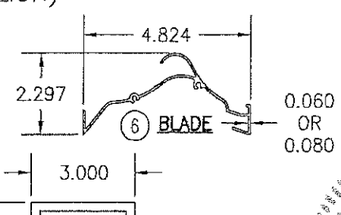

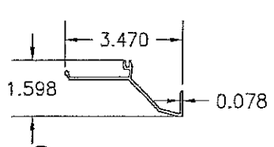

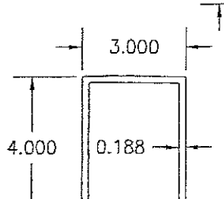

8A TUBE MULLION (USED WITH NON-ARCHITECTURAL LOUVERS)

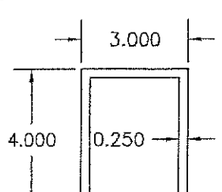

8B TUBE MULLION (USED WITH NON-ARCHITECTURAL LOUVERS)

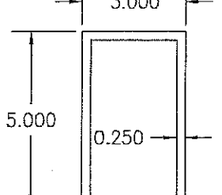

9 TUBE MULLION (USED WITH ARCHITECTURAL LOUVERS)

DRAWN BY: W.R.M.	CHECKED BY: W.W.S.
PLOT: 1=4	DATE: 07/23/09

NO.	REVISION DESCRIPTION	BY	DATE

DRAWING TITLE
EA-52 IMPACT LOUVER SYSTEM

MANUFACTURER
ARROW UNITED INDUSTRIES;
A DIVISION OF MESTEK, INC.
450 RIVERSIDE DRIVE
WYALUSING, PA 18853
570-746-1888

CONSULTANTS
W. W. SCHAEFER ENGINEERING & CONSULTING, P.A. (CA 6809)
7480 156TH COURT NORTH
PALM BEACH GARDENS, FL 33418
PHONE: 561-744-3424

CERTIFICATION
JUL 05 2017
WARREN W. SCHAEFER, P.E. NO. 44135

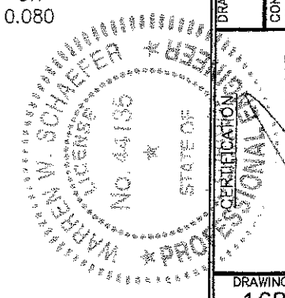

DRAWING NO. 1685
REV. B
SHEET NO. 9 OF 10

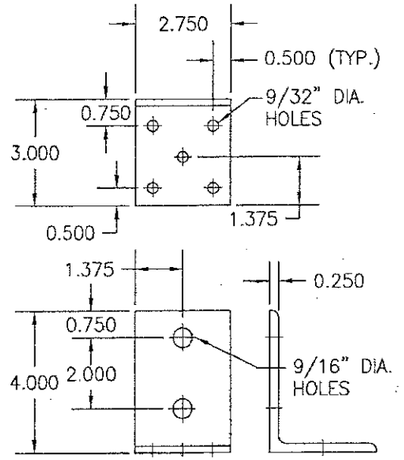

(10) MULLION END INSTALLATION CLIP

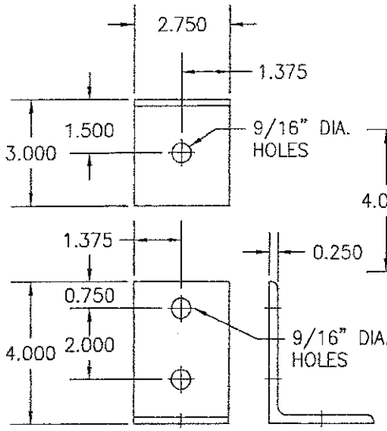

(11) MULLION END INSTALLATION CLIP

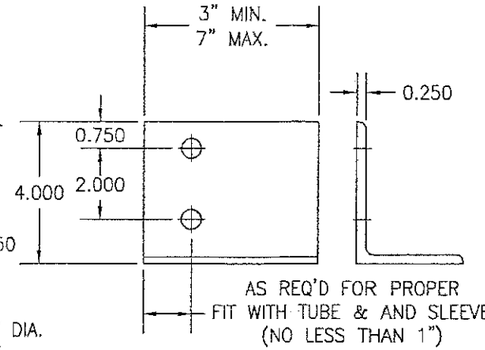

(12) MULLION END CLIP FOR SLEEVE MOUNT LOUVERS

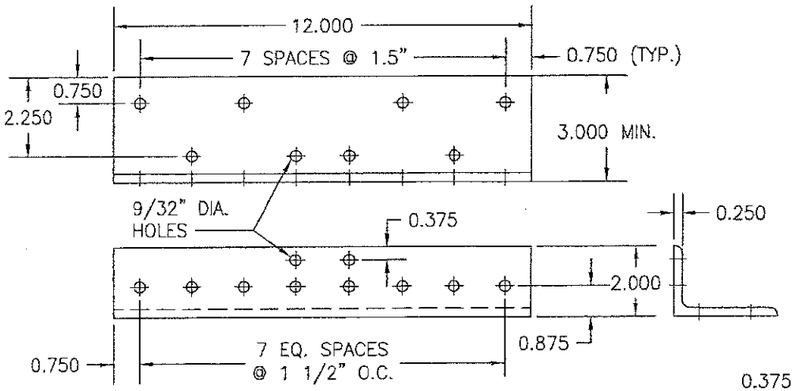

(13) MULLION END INSTALLATION CLIP

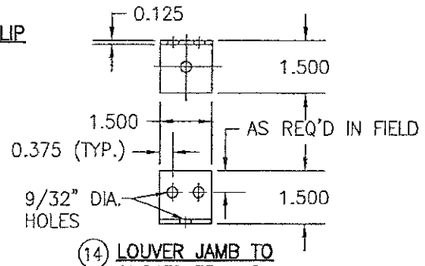

(14) LOUVER JAMB TO SUBSTRATE CLIP

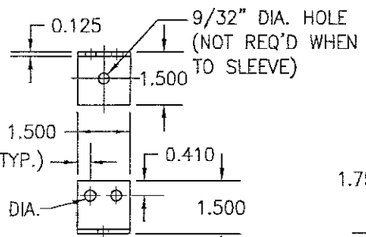

(15) SLEEVE OR TUBE MULLION TO LOUVER JAMB CLIP

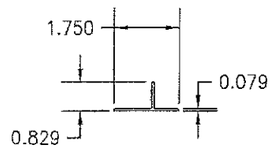

(19) MULLION COVER

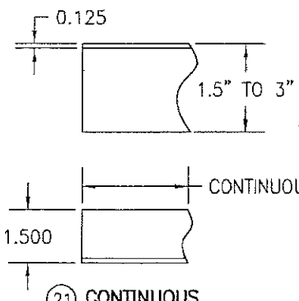

(21) CONTINUOUS SUPPORT ANGLE

1.5" LEG SHALL BE SECURED TO THE LOUVER JAMB

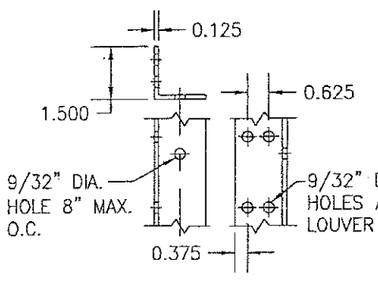

(16) TUBE MULLION TO LOUVER BLADE ANGLE (ARCHITECTURAL LOUVER)

(LENGTH = CONTINUOUS)

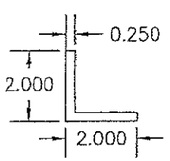

(17) SLEEVE SUPPORT ANGLE

(LENGTH = CONTINUOUS)

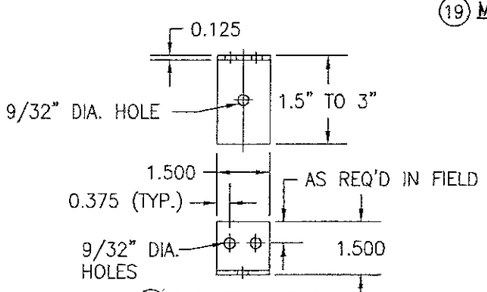

(18) LOUVER JAMB TO SUBSTRATE CLIP

1.5" LEG SHALL BE SECURED TO THE LOUVER JAMB

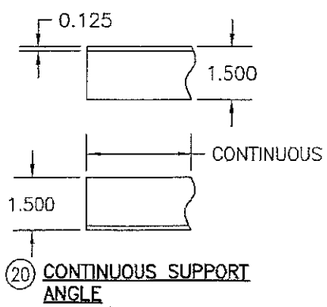

(20) CONTINUOUS SUPPORT ANGLE

ITEM #	ITEM DESCRIPTION	MANUFACTURER/NOTES
	PARTS	
1	HEAD	6063-T6 ALUMINUM
2	SILL	6063-T6 ALUMINUM
3	SILL PAN	6063-T5 ALUMINUM
4	JAMB	6063-T6 ALUMINUM
5	SLEEVE	5052-H32 ALUMINUM
6	BLADE	6063-T6 ALUMINUM
7	BLADE SUPPORT BRACKET	6063-T6 ALUMINUM
8A	TUBE MULLION (USED WITH NON-ARCHITECTURAL LOUVERS)	6063-T6 OR 6061-T6 ALUMINUM
8B	TUBE MULLION (USED WITH NON-ARCHITECTURAL LOUVERS)	6063-T6 OR 6061-T6 ALUMINUM
9	TUBE MULLION (USED WITH ARCHITECTURAL LOUVERS)	6063-T6 OR 6061-T6 ALUMINUM
10	MULLION END INSTALLATION CLIP	6061-T6 ALUMINUM
11	MULLION END INSTALLATION CLIP	6061-T6 ALUMINUM
12	MULLION END CLIP FOR SLEEVE MOUNT LOUVERS	6061-T6 ALUMINUM
13	MULLION END INSTALLATION CLIP	6061-T6 ALUMINUM
14	LOUVER JAMB TO SUBSTRATE CLIP	6063-T5 ALUMINUM
15	SLEEVE OR TUBE MULLION TO LOUVER JAMB CLIP	6063-T5 ALUMINUM (WITHIN 4" OF SLEEVE CORNERS OR TUBE MULLION ENDS AND MAX. 8" O.C.)
16	TUBE MULLION TO LOUVER BLADE ANGLE (ARCHITECTURAL LOUVER)	6063-T5 ALUMINUM
17	SLEEVE SUPPORT ANGLE	6063-T5 ALUMINUM
18	LOUVER JAMB TO SUBSTRATE CLIP	6063-T5 ALUMINUM
19	MULLION COVER	6063-T5 ALUMINUM
20	CONTINUOUS SUPPORT ANGLE	6063-T5 ALUMINUM
21	CONTINUOUS SUPPORT ANGLE	6063-T5 ALUMINUM
	MISC. FASTENERS	
25	1/4-14 X 3/4" SELF TAP/DRILL SCREW	2 PER CLIP
26	1/4-14 X 3/4" SELF TAP/DRILL SCREW	WITHIN 4" OF CORNERS & SLEEVE SPLICES & MAX. 8" O.C. (CLUSTERED AT MULLION ENDS PER DETAILS)
27	1/4-14 X 3/4" SELF TAP/DRILL SCREW	8" O.C. PER SECTIONS
28	1/4-14 X 3/4" SELF TAP/DRILL SCREW	4 AT HEAD & 2 PER BLADE
29	1/2" X 5" A307 HEX HEAD PLATED STEEL OR S/STL NUT & BOLT	2 PER MULLION END
30	1/4-14 X 3/4" SELF TAP/DRILL SCREW	10 PER CLIP
31	1/4-14 X 3/4" SELF TAP/DRILL SCREW	1 PER CLIP
32	NO. 7 X 1/2" SMS SCREW	WITHIN 6" OF CORNERS & 24" MAX. O.C.
33	1/4-14 X 3/4" SELF TAP/DRILL SCREW	SEE ANCHOR SPACING/PRESSURE TABLE TABLE FOR SPACING REQUIREMENTS

PRODUCT REVISED
as complying with the Florida Building Code
NOA-No. 17-0713.05
Expiration Date 01/06/2020
By
Miami-Dade Product Control

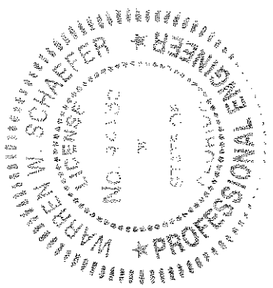

DRAWN BY: W.R.M. | CHECKED BY: W.W.S.
PLOT: 1=4 | DATE: 07/23/09

NO.	REVISION DESCRIPTION	BY	DATE

MANUFACTURER
ARROW UNITED INDUSTRIES;
A DIVISION OF MESTEK, INC.
450 RIVERSIDE DRIVE
WYALUSING, PA 18853
570-746-1888

DRAWING TITLE
EA-52 IMPACT LOUVER SYSTEM

CONSULTANTS
W. W. SCHAEFER ENGINEERING & CONSULTING, P.A. (CA 6809)
7480 150TH COURT NORTH
PALM BEACH GARDENS, FL 33418
PHONE: 561-744-3424

CERTIFICATION
JUL 05 2017
WARREN W. SCHAEFER, P.E.
P.E. NO. 44135

DRAWING NO. 1685 | REV. B
SHEET NO. 10 OF 10