MIAMI-DADE COUNTY
PRODUCT CONTROL SECTION
11805 SW 26 Street, Room 208
Miami, Florida 33175-2474
T (786) 315-2590 F (786) 315-2599
www.miamidade.gov/economy

DEPARTMENT OF REGULATORY AND ECONOMIC RESOURCES (RER)
BOARD AND CODE ADMINISTRATION DIVISION

# NOTICE OF ACCEPTANCE (NOA)

**Miami Rolling Doors, Corp.**
**276 W 24 Street**
**Hialeah, FL 33010**

## SCOPE:

This NOA is being issued under the applicable rules and regulations governing the use of construction materials. The documentation submitted has been reviewed and accepted by Miami-Dade County RER-Product Control Section to be used in Miami Dade County and other areas where allowed by the Authority Having Jurisdiction (AHJ).

This NOA shall not be valid after the expiration date stated below. The Miami-Dade County Product Control Section (In Miami Dade County) and/or the AHJ (in areas other than Miami Dade County) reserve the right to have this product or material tested for quality assurance purposes. If this product or material fails to perform in the accepted manner, the manufacturer will incur the expense of such testing and the AHJ may immediately revoke, modify, or suspend the use of such product or material within their jurisdiction. RER reserves the right to revoke this acceptance, if it is determined by Miami-Dade County Product Control Section that this product or material fails to meet the requirements of the applicable building code.

This product is approved as described herein, and has been designed to comply with the Florida Building Code, including the High Velocity Hurricane Zone.

**DESCRIPTION: Model MRD-65 Steel Rolling Door up to 24'- 6 5/8" Wide**

**APPROVAL DOCUMENT:** Drawing No. **AD10-25**, titled "Model MRD-65 Rolling Door (LMI)", sheets 1 through 4 of 4, dated 09/14/2010, with revision 3 dated 07/20/2017, prepared by MCY Engineering, Inc., signed and sealed by Yiping Wang, P.E., bearing the Miami-Dade County Product Control revision stamp with the Notice of Acceptance number and expiration date by the Miami-Dade County Product Control Section.

**MISSILE IMPACT RATING: Large and Small Missile Impact Resistant**

**LABELING:** A permanent label with the manufacturer's name or logo, manufacturing address, model/series number, the positive and negative design pressure rating, indicate impact rated if applicable, installation instruction drawing reference number, approval number (NOA), the applicable test standards, and the statement reading 'Miami-Dade County Product Control Approved' is to be located on the door's side track, bottom angle, or inner surface of a panel.

**RENEWAL** of this NOA shall be considered after a renewal application has been filed and there has been no change in the applicable building code negatively affecting the performance of this product.

**TERMINATION** of this NOA will occur after the expiration date or if there has been a revision or change in the materials, use, and/or manufacture of the product or process. Misuse of this NOA as an endorsement of any product, for sales, advertising or any other purposes shall automatically terminate this NOA. Failure to comply with any section of this NOA shall be cause for termination and removal of NOA.

**ADVERTISEMENT:** The NOA number preceded by the words Miami-Dade County, Florida, and followed by the expiration date may be displayed in advertising literature. If any portion of the NOA is displayed, then it shall be done in its entirety.

**INSPECTION:** A copy of this entire NOA shall be provided to the user by the manufacturer or its distributors and shall be available for inspection at the job site at the request of the Building Official.

This NOA **revises NOA # 15-0731.06** and consists of this page 1 and evidence pages E-1 and E-2, as well as approval document mentioned above.

The submitted documentation was reviewed by **Carlos M. Utrera, P.E.**

MIAMI-DADE COUNTY APPROVED

10/18/2017

## NOTICE OF ACCEPTANCE: EVIDENCE SUBMITTED

### 2. NEW EVIDENCE SUBMITTED

### A. DRAWINGS

1. Drawing No. **AD10-25**, titled "Model MRD-65 Rolling Door (LMI)", sheets 1 through 4 of 4, dated 09/14/2010, with revision 3 dated 07/20/2017, prepared by MCY Engineering, Inc, signed and sealed by Yiping Wang, P.E.

### B. TESTS

1. None.

### C. CALCULATIONS

1. None.

### D. QUALITY ASSURANCE

1. Miami-Dade Department of Regulatory and Economic Resources (RER)

### E. MATERIAL CERTIFICATIONS

1. None.

### F. STATEMENTS

1. Statement letter of code conformance to the 6th Edition (2017) FBC and of no financial interest issued by MCY Engineering, Inc, dated 07/21/2017, signed and sealed by Yiping Wang, P.E.

10/18/2017

**Carlos M. Utrera, P.E.**
**Product Control Examiner**
**NOA No. 17-0725.14**
**Expiration Date: December 30, 2020**
**Approval Date: October 26, 2017**

## NOTICE OF ACCEPTANCE: EVIDENCE SUBMITTED

### 1. EVIDENCE SUBMITTED UNDER PREVIOUS NOAs

**A. DRAWINGS** ***"Submitted under NOA #15-0731.06"***

1. Drawing No. **AD10-25**, titled "Model MRD-65 Rolling Door (LMI)", sheets 1 through 4 of 4, dated 09/14/2010, with revision 2 dated 06/26/2015, prepared by MCY Engineering, Inc, signed and sealed by Yiping Wang, P.E.

**B. TESTS** ***"Submitted under NOA # 10-0928.08"***

1. Test reports on 1) Uniform Static Air Pressure Test, Loading per FBC, TAS 202-94
   2) Large Missile Impact Test per FBC, TAS 201-94
   3) Cyclic Wind Pressure Loading per FBC, TAS 203-94
   4) Forced Entry Test, per FBC 2411 3.2.1, TAS 202-94
   5) Tensile Test per ASTM A370-05,

   along with installation diagram of Series MRD-65 Garage Doors, prepared by Fenestration Testing Laboratory, Inc, Test Report No. **FTL-6223**, dated 08/31/2010, signed and sealed by Jorge A. Causo, P.E.

**C. CALCULATIONS** ***"Submitted under NOA #15-0731.06"***

1. Anchor verification calculations and structural analysis prepared by MCY Engineering, Inc, dated 07/15/2015, signed and sealed by Yiping Wang, P.E.

***"Submitted under NOA # 10-0928.08"***

2. Anchor verification calculations and structural analysis, complying with FBC-2007, prepared by MCY Engineering, Inc, dated 09/23/2010, signed and sealed by Yiping Wang, P.E.

**D. QUALITY ASSURANCE**

1. Miami-Dade Department of Regulatory and Economic Resources (RER)

**E. MATERIAL CERTIFICATIONS**

1. None.

**F. STATEMENTS** ***"Submitted under NOA #15-0731.06"***

1. Statement letter of code conformance to the 5th edition (2014) FBC issued by MCY Engineering, Inc, dated 07/15/2015, signed and sealed by Yiping Wang, P.E.
2. Statement letter of no financial interest issued by MCY Engineering, Inc, dated 07/15/2015, signed and sealed by Yiping Wang, P.E.

10/18/2017

**Carlos M. Utrera, P.E.**
**Product Control Examiner**
**NOA No. 17-0725.14**
**Expiration Date: December 30, 2020**
**Approval Date: October 26, 2017**

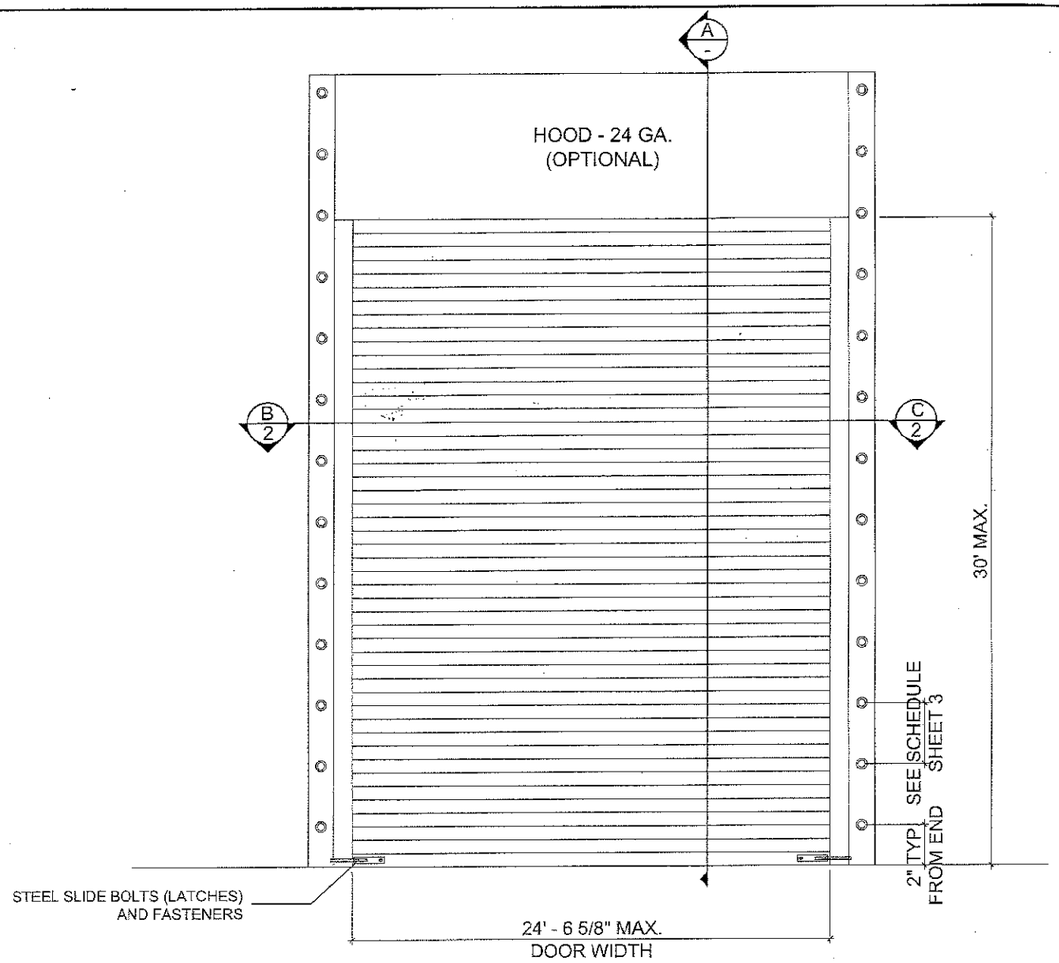


TYPICAL ELEVATION

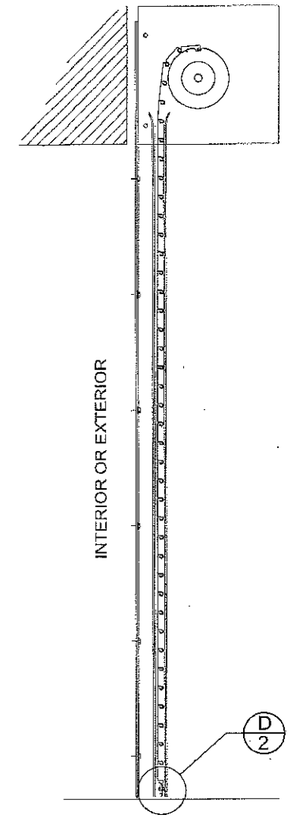


A - SECTION

DESIGN LOADS
+ 65 PSF
- 65 PSF

GENERAL NOTES:

- THIS PRODUCT HAS BEEN DESIGNED AND TESTED TO COMPLY WITH THE REQUIREMENTS OF THE 6TH EDITION FLORIDA BUILDING CODE (2017) INCLUDING HIGH VELOCITY HURRICANE ZONE (HVHZ).

- THE ROLLING UP DOOR HAVE BEEN TESTED AS PER THE 6TH EDITION FLORIDA BUILDING CODE (2017) TAS 201, 202 AND 203 FOR LARGE MISSILE IMPACT. FORCE ENTRY RESISTANCE TEST PER AAMA 1303.5 IN ACCORDANCE WITH CHAPTER 17 OF THE 6TH EDITION FLORIDA BUILDING CODE (2017).

- DOOR IMPACTED ON BOTH SIDES AND MAY BE INSTALLED ON THE INSIDE OR OUTSIDE OF AN EXTERIOR WALL. THE SLATS MAY BE INSTALLED CONCAVE SIDE FACING OUTSIDE OR INSIDE OF BUILDING

- DESIGN LOAD SHALL BE DETERMINED BASED ON BASIC WIND SPEED, BUILDING HEIGHT AND WIND ZONE USING APPLICABLE ASCE 7 STANDARD

- HOOD TO BE 24 GA. ASTM A653 DESIGNATION G - 90 FINISH TYPE COATING.

- ANCHORS SHALL BE AS LISTED, SPACED AS SHOWN ON DETAILS. ANCHORS EMBEDMENT TO BASE MATERIAL SHALL BE BEYOND WALL DRESSING OR STUCCO.

- ANCHORING OR LOADING CONDITIONS NOT SHOWN IN THESE DETAILS ARE NOT PART OF THIS APPROVAL.

- MATERIALS INCLUDING BUT NOT LIMITED TO STEEL/METAL SCREWS THAT COME INTO CONTACT WITH OTHER DISSIMILAR MATERIALS SHALL MEET THE REQUIREMENTS OF THE 6TH EDITION FLORIDA BUILDING CODE (2017) SECTION AS APPLICABLE.

- IT SHALL BE THE RESPONSIBILITY OF THE CONTRACTOR TO VERIFY THAT THE EXISTING STRUCTURE IS DESIGNED TO SUPPORT Vx & Vy FORCES AT BOTH JAMBS.

- ULTIMATE LOAD OBTAINED FROM ASCE 7-10, MULTIPLY BY 0.6 SHALL BE LESS THAN OR EQUAL TO MAX. DESIGN LOAD IN THIS DOCUMENT. THE DESIGN LOADS SHOWN IN THIS DOCUMENT ARE ALLOWABLE DESIGN LOADS.

**PRODUCT REVISED**
**as complying with the Florida Building Code**
**NOA-No. 17-0725.14**
**Expiration Date 12/30/2020**
**By**
**Miami-Dade Product Control**
MIAMI-DADE COUNTY

YIPING WANG, P.E.
FLORIDA REGISTRATION
PE #55983
JUL 21 2017
No 55983
STATE OF FLORIDA
PROFESSIONAL ENGINEER

REVISIONS

| NO | DATE | DESCRIPTION |
|---|---|---|
| 1. | 04/11/12 | UPDATE TO 2010 FBC |
| 2. | 05/28/15 | UPDATE TO 2014 FBC |
| 3. | 07/20/17 | UPDATE TO 2017 FBC |


MCY ENGINEERING, INC.
GLAZING CONSULTANTS
9501 SW 124 AVE STE. 205A P: 305.271.0117
MIAMI, FL 33183 F: 786.573.5063
www.MCYEngineering.com MCY.Engineering@Att.net


MODEL MRD-65 ROLLING DOOR (LMI)


MIAMI ROLLING DOORS, CORP.
268 W 24TH STREET
HIALEAH, FL 33010
P: (305) 463 - 9218 F: (305) 463 - 9207
www.miamirollingdoors.com


| | |
|---|---|
| DATE | 09-14-10 |
| SCALE | AS NOTED |
| DRAWN | S.L. |
| PROJECT | MCY 15-104 |

DRAWING NO.
AD10-25

SHEET 1 of 4

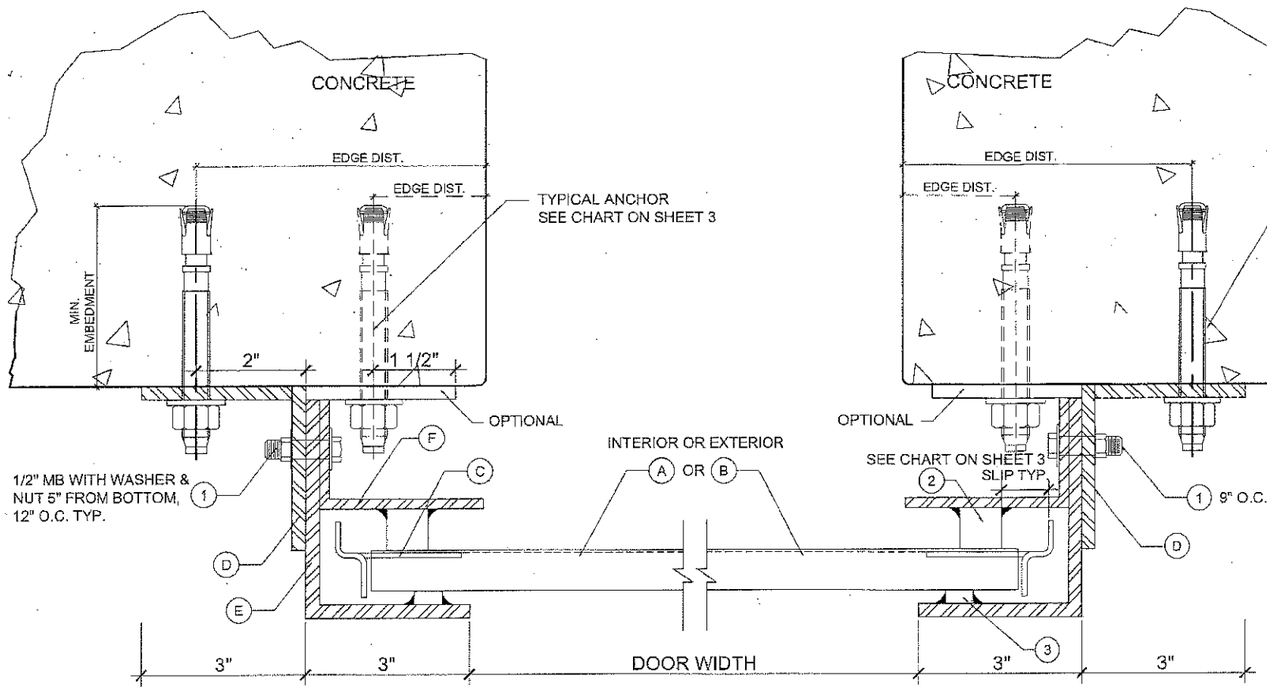


B

C

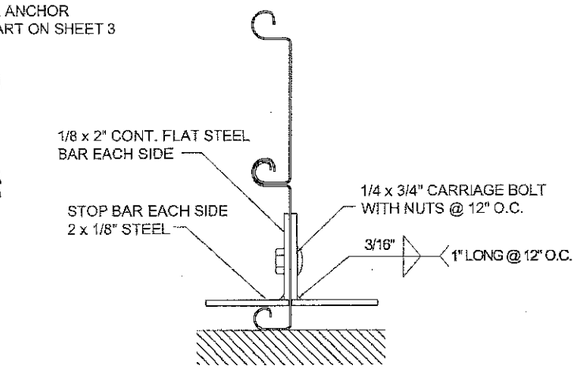


D BOTTOM BAR DETAIL

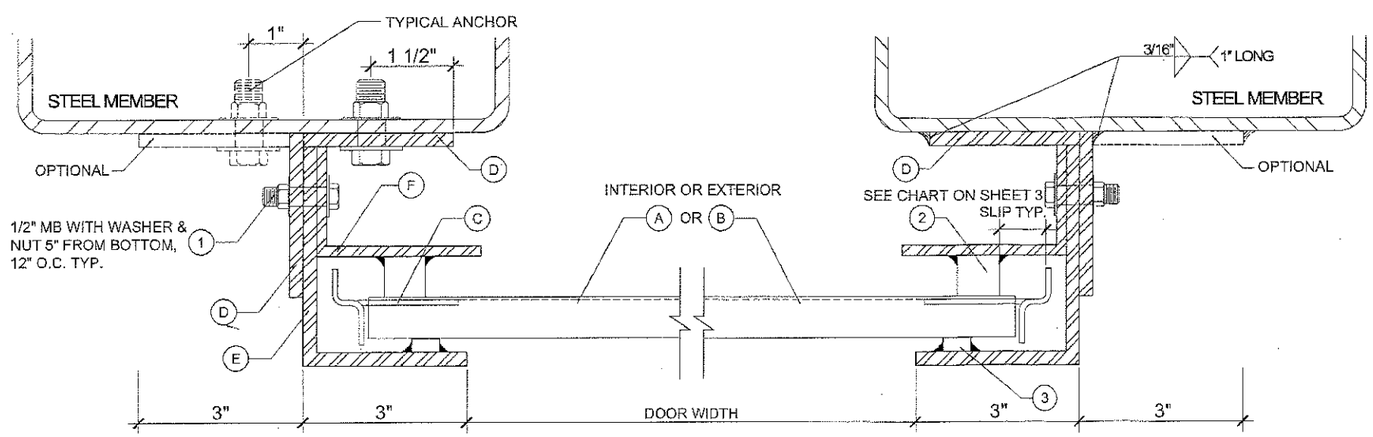


B

C

**PRODUCT REVISED**
**as complying with the Florida Building Code**
**NOA-No. 17-0725.14**
**Expiration Date 12/30/2020**
**By**
**Miami-Dade Product Control**
MIAMI-DADE COUNTY

JUL 21 2017

YIPING WANG, P.E.
FLORIDA REGISTRATION
PE #55983
C.A.N.: 28677
STATE OF FLORIDA
PROFESSIONAL ENGINEER

| REVISIONS | | |
|---|---|---|
| NO | DATE | DESCRIPTION |
| 1. | 04/11/12 | UPDATE TO 2010 FBC |
| 2. | 08/29/15 | UPDATE TO 2014 FBC |
| 3. | 07/20/17 | UPDATE TO 2017 FBC |


MCY ENGINEERING, INC.
GLAZING CONSULTANTS
6501 SW 124 AVE STE. 205A
MIAMI, FL. 33183
P: 305.271.0117
F: 786.573.5063
www.MCYEngineering.com
MCY.Engineering@Att.net


MODEL MRD-65 ROLLING DOOR (LMI)


MIAMI ROLLING DOORS, CORP.
268 W 24TH STREET
HIALEAH, FL 33010
P: (305) 463 - 9216 F: (305) 463 - 9207
www.miamirollingdoors.com


| | |
|---|---|
| DATE | 09-14-10 |
| SCALE | AS NOTED |
| DRAWN | S.L. |
| PROJECT | MCY 15-104 |

DRAWING NO.
AD10-25

SHEET 2 of 4

# ANCHOR SPACING (INCHES)

| MAXIMUM DESIGN LOAD (PSF) | DOOR WIDTH (FT) | DESIGN SLIP (IN) | Vx (LB/FT) | Vy (LB/FT) | MOUNTING 1 | | | | MOUNTING 2 | | | | MOUNTING 3 | | MOUNTING 4 |
|---|---|---|---|---|---|---|---|---|---|---|---|---|---|---|---|
| | | | | | 1/2" Ø KWIK BOLT | | 5/8" Ø KWIK BOLT | | 1/2" Ø KWIK BOLT | | 5/8" Ø KWIK BOLT | | 1/2" MACHINE BOLT GRADE 2 | 5/8" MACHINE BOLT GRADE 2 | 3/16 X 1" WELD |
| | | | | | fc' = 6000 PSI | fc' = 4000 PSI | fc' = 6000 PSI | fc' = 4000 PSI | fc' = 6000 PSI | fc' = 4000 PSI | fc' = 6000 PSI | fc' = 4000 PSI | | | |
| ± 55 | 9' | 0.1 | 1118 | 261 | 8.000 | 8.000 | 8.000 | 8.000 | 8.000 | 6.500 | 8.000 | 8.000 | 8.000 | 8.000 | 12.000 |
| | 13' | 1/4 | 1668 | 371 | 8.000 | 8.000 | 8.000 | 8.000 | 5.750 | 4.500 | 8.000 | 6.375 | 7.500 | 8.000 | 12.000 |
| | 17' | 1/2 | 1960 | 481 | 8.000 | 7.250 | 8.000 | 8.000 | 4.875 | - | 7.000 | 5.375 | 6.750 | 7.750 | 10.250 |
| | 21' | 3/4 | 2293 | 591 | 8.000 | 6.250 | 8.000 | 8.000 | 4.000 | - | 6.000 | 4.500 | 5.750 | 6.500 | 8.250 |
| | 24' - 6 5/8" | 1 | 2559 | 689 | 7.500 | 5.500 | 8.000 | 8.000 | - | - | 5.375 | 4.000 | 5.000 | 5.875 | 7.625 |
| ± 65 | 9' | 0.1 | 1427 | 309 | 8.000 | 8.000 | 8.000 | 8.000 | 6.500 | 5.250 | 8.000 | 7.500 | 8.000 | 8.000 | 12.000 |
| | 13' | 1/4 | 2007 | 439 | 8.000 | 6.750 | 8.000 | 8.000 | 4.500 | - | 6.500 | 5.375 | 6.500 | 8.000 | 10.000 |
| | 17' | 1/2 | 2325 | 569 | 7.500 | 5.750 | 8.000 | 7.250 | 4.000 | - | 5.500 | 4.500 | 5.500 | 8.000 | 8.500 |
| | 21' | 3/4 | 2702 | 699 | 6.500 | 4.875 | 8.000 | 6.250 | - | - | 4.750 | 4.000 | 4.750 | 7.500 | 7.250 |
| | 24' - 6 5/8" | 1 | 3005 | 814 | 5.750 | 4.375 | 7.000 | 5.500 | - | - | 4.250 | - | 4.375 | 6.250 | 6.500 |

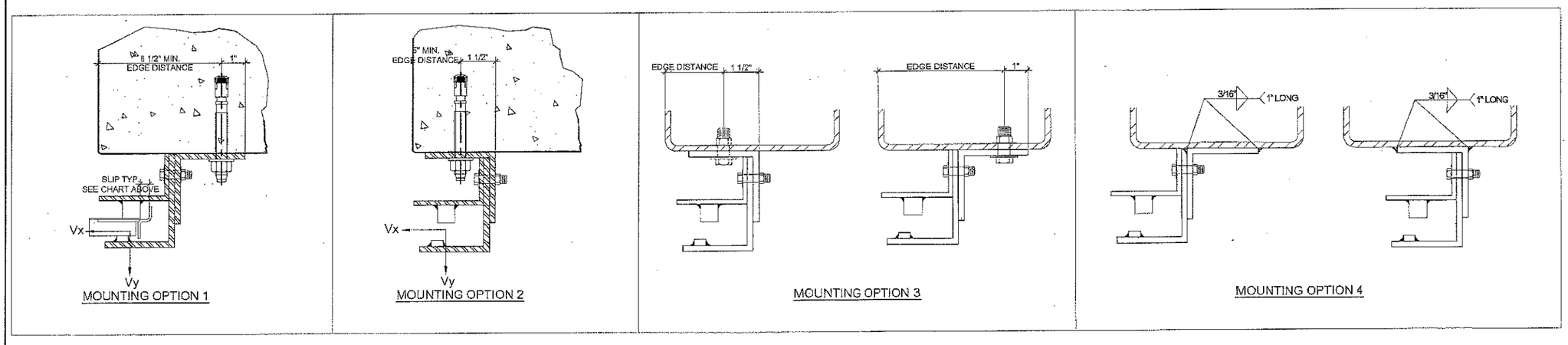


## TYPICAL ANCHORS @ JAMB:

(SEE CHART FOR SPACING)

TYPE A. 1/2" DIA. KWIK BOLT 3 ANCHOR BY 'HILTI'
DIRECTLY INTO fc'=6000 PSI OR fc'=4000 PSI CONCRETE,
4" MIN EMBED,
MIN EDGE 6.5" @ MOUNTING 1
MIN EDGE 5" @ MOUNTING 2

TYPE B 5/8" DIA. KWIK BOLTS BY 'HILTI'
DIRECTLY INTO fc'=6000 PSI OR fc'=4000 PSI CONCRETE
5 1/2" MIN. EMBED
MIN EDGE 6.5" @ MOUNTING 1
MIN EDGE 5" @ MOUNTING 2

TYPE C. 1/2 DIA. MACHINE BOLTS (MIN. GRADE 2 CRS) W/ WASHER & NUTS
INTO STEEL 1/4" MIN. THICK STEEL : Fy = 36 KSI MIN.

TYPE D. 5/8" DIA. MACHINE BOLTS (MIN. GRADE 2 CRS) W/ WASHER & NUTS
INTO STEEL 1/4" MIN. THICK STEEL : Fy = 36 KSI MIN.

TYPE E. 3/16" WELDS ELECTRODE E70
3/16" x 1" WELD AT EACH SIDE OF STEEL ANGLE

JUL 21 2017

**PRODUCT REVISED**
**as complying with the Florida Building Code**
**NOA-No. 17-0725.14**
**Expiration Date 12/30/2020**
**By**
**Miami-Dade Product Control**
MIAMI-DADE COUNTY

YIPING WANG, P.E.
FLORIDA REGISTRATION
PE #55983
C.A.#: 28677
STATE OF FLORIDA
PROFESSIONAL ENGINEER

| REVISIONS | | | |
|---|---|---|---|
| NO. | DATE | DESCRIPTION | |
| 1. | 04/11/12 | UPDATE TO 2010 FBC | |
| 2. | 06/25/16 | UPDATE TO 2014 FBC | |
| 3. | 07/25/17 | UPDATE TO 2017 FBC | |


MCY ENGINEERING, INC.
GLAZING CONSULTANTS
8501 SW 124 AVE STE. 205A
MIAMI, FL 33183
P: 305.271.0117
F: 786.573.5063
www.MCYEngineering.com
MCY.Engineering@Att.net


MODEL MRD-65 ROLLING DOOR (LMI)

MIAMI ROLLING DOORS, CORP.
266 W 24TH STREET
HIALEAH, FL 33010
P: (305) 463 - 9218 F: (305) 463 - 9207
www.miamirollingdoors.com

| | |
|---|---|
| DATE | 09-14-10 |
| SCALE | AS NOTED |
| DRAWN | S.L. |
| PROJECT | MCY 15-104 |

DRAWING NO.
AD10-25

SHEET 3 of 4

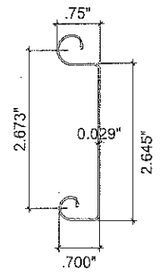


(A) FLAT SLATE PROFILE
22 GA

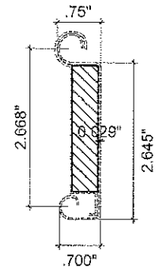


(B) INSULATED FLAT SLAT PROFILE
22 GA

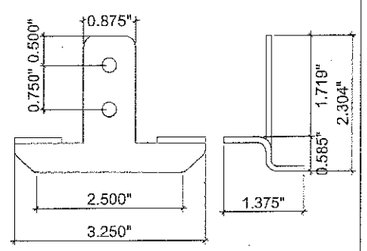


(C) WINDLOCKS
11 GA

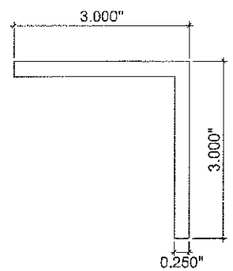


(D) 3 x 3 x 1/4" STEEL ANGLE

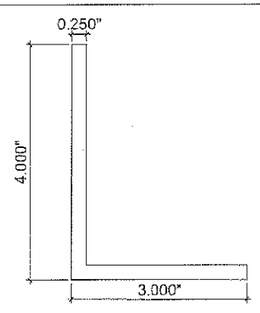


(E) 3 x 4 x 1/4" STEEL ANGLE

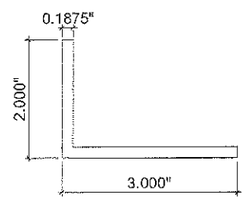


(F) 2 x 3 x 3/16" STEEL ANGLE

## BILL OF MATERIALS

| ITEM # | QTY. | DESCRIPTION | MATERIAL | MANUFACTURER/REMARKS |
|---|---|---|---|---|
| A | AS REQD | 22GA (0.029") FLAT SLAT | GALVANIZED STEEL OR STAINLESS STEEL | ASTM A653 Fy = 50 KSI OR STAINLESS STEEL AISI 304 Fy = 50KSI . MIAMI ROLLING DOORS, CORP |
| B | AS REQD | INSULATED FLAT SLAT | EXPANDED POLYSTYRENE | OPTIONAL NOA 11-0926.07 IF NEEDED FOR INSULATION OR FIRE PROTECTION PURPOSES |
| C | EVERY OTHER SLAT | 11 GA WINDLOCKS | PLATED STEEL | ASTM A36 MIN. MIAMI ROLLING DOORS, CORP. |
| D | 2 PER FRAME | 3 x 3 x 1/4" STEEL ANGLE | STEEL | ASTM A36 MIN. |
| E | 2 PER FRAME | 3 x 4 x 1/4" STEEL ANGLE | STEEL | ASTM A36 MIN. |
| F | 2 PER FRAME | 2 x 3 x 3/16" STEEL ANGLE | STEEL | ASTM A36 MIN. |
| 1 | AS REQD. | 1/2" x 1 1/2" ASSEMBLY BOLT | STEEL SAE GRADE 2 MIN. | 5" FROM BOTTOM AND 12" O.C. |
| 2 | AS REQD. | 3/4" x 3/4" CONTINUOUS SOLID STEEL WINDBAR | STEEL ASTM A36 MIN. | 3/16" x 1" WELDED TO TRACK EACH SIDE @ 12 O.C. |
| 3 | AS REQD. | 1/2" x 1/4" CONTINUOUS SOLID STEEL WINDBAR | STEEL ASTM A36 MIN. | 3/16" x 1" WELDED TO TRACK EACH SIDE @ 12 O.C. |

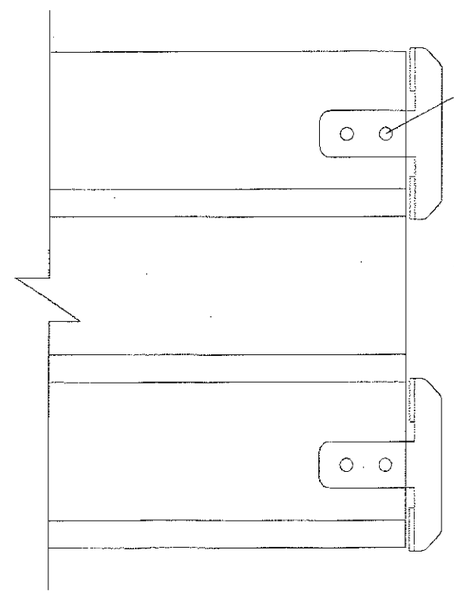


## INTERLOCKING SLATS W/ WINDLOCKS
@ EVERY OTHER SLAT

**PRODUCT REVISED**
**as complying with the Florida Building Code**
**NOA-No.** 17-0725.14
**Expiration Date** 12/30/2020
**By**
**Miami-Dade Product Control**
MIAMI-DADE COUNTY

JUL 21 2017

YIRONG WANG, P.E.
FLORIDA REGISTRATION
PE # 55983
C.A.N. 28677
No 55983
STATE OF FLORIDA
PROFESSIONAL ENGINEER

REVISIONS

| NO | DATE | DESCRIPTION |
|---|---|---|
| 1. | 04/11/12 | UPDATE TO 2010 FBC |
| 2. | 08/29/16 | UPDATE TO 2014 FBC |
| 3. | 07/20/17 | UPDATE TO 2017 FBC |


MCY ENGINEERING, INC.
GLAZING CONSULTANTS
8501 SW 124 AVE STE. 205A
MIAMI, FL 33183
P: 305.271.0117
F: 786.573.5063
www.MCYEngineering.com
MCY.Engineering@Att.net


MODEL MRD-65 ROLLING DOOR (LMI)


MIAMI ROLLING DOORS, CORP.
266 W 24TH STREET
HIALEAH, FL 33010
P: (305) 463 - 9218 F: (305) 463 - 9207
www.miamirollingdoors.com


| | |
|---|---|
| DATE | 09-14-10 |
| SCALE | AS NOTED |
| DRAWN | S.L. |
| PROJECT | MCY 18-104 |

DRAWING NO.
AD10-25

SHEET 4 of 4