MIAMI-DADE COUNTY
DEPARTMENT OF REGULATORY AND ECONOMIC RESOURCES (RER)
BOARD AND CODE ADMINISTRATION DIVISION

MIAMI-DADE COUNTY
PRODUCT CONTROL SECTION
11805 SW 26 Street, Room 208
T (786) 315-2590 F (786) 315-2599
www.miamidade.gov/economy

NOTICE OF ACCEPTANCE (NOA)

Weather Shield Manufacturing, Inc.
One Weather Shield Plaza (P.O. Box 309)
Medford, WI 54451–0309

SCOPE:

This NOA is being issued under the applicable rules and regulations governing the use of construction materials. The documentation submitted has been reviewed and accepted by Miami-Dade County RER - Product Control Section to be used in Miami Dade County and other areas where allowed by the Authority Having Jurisdiction (AHJ).

This NOA shall not be valid after the expiration date stated below. The Miami-Dade County Product Control Section (In Miami Dade County) and/or the AHJ (in areas other than Miami Dade County) reserve the right to have this product or material tested for quality assurance purposes. If this product or material fails to perform in the accepted manner, the manufacturer will incur the expense of such testing and the AHJ may immediately revoke, modify, or suspend the use of such product or material within their jurisdiction. RER reserves the right to revoke this acceptance, if it is determined by Miami-Dade County Product Control Section that this product or material fails to meet the requirements of the applicable building code.

This product is approved as described herein, and has been designed to comply with the Florida Building Code, including the High Velocity Hurricane Zone.

DESCRIPTION: Series "1604 Transom" Aluminum Clad Wood Fixed Window – L.M.I.

APPROVAL DOCUMENT: Drawing No. **1651**, titled "1604 Aluminum Clad Transom Window", sheets 1 thru 3 of 3, dated 05/11/09, with revision B1 dated 04/16/14, prepared by W.W. Schaefer Engineering & Consulting, P.A., signed and sealed by Warren W. Schaefer, P.E., bearing the Miami-Dade County Product Control Revision stamp with the Notice of Acceptance number and expiration date by the Miami–Dade County Product Control Section.

MISSILE IMPACT RATING: Large and Small Missile Impact Resistant.

LABELING: Each unit shall bear a permanent label with the manufacturer's name or logo, city, state, model/series, and following statement: "Miami-Dade County Product Control Approved", unless otherwise noted herein.

RENEWAL of this NOA shall be considered after a renewal application has been filed and there has been no change in the applicable building code negatively affecting the performance of this product.

TERMINATION of this NOA will occur after the expiration date or if there has been a revision or change in the materials, use, and/or manufacture of the product or process. Misuse of this NOA as an endorsement of any product, for sales, advertising or any other purposes shall automatically terminate this NOA. Failure to comply with any section of this NOA shall be cause for termination and removal of NOA.

ADVERTISEMENT: The NOA number preceded by the words Miami-Dade County, Florida, and followed by the expiration date may be displayed in advertising literature. If any portion of the NOA is displayed, then it shall be done in its entirety.

INSPECTION: A copy of this entire NOA shall be provided to the user by the manufacturer or its distributors and shall be available for inspection at the job site at the request of the Building Official.

This NOA **revises NOA# 14-0513.06** and consists of this page 1 and evidence pages E-1, E-2 and E-3, as well as approval document mentioned above.

The submitted documentation was reviewed by **Manuel Perez, P.E.**

MIAMI-DADE COUNTY APPROVED

10/31/17

NOA No. 17-0803.38
Expiration Date: March 10, 2020
Approval Date: November 09, 2017

Weather Shield Manufacturing, Inc.

NOTICE OF ACCEPTANCE: EVIDENCE SUBMITTED

1. EVIDENCE SUBMITTED UNDER PREVIOUS NOA's

A. DRAWINGS

1. Manufacturer's die drawings and sections.
   (Submitted under NOA No. 09-0901.10)
2. Drawing No. **1651**, titled "1604 Aluminum Clad Transom Window", sheets 1 thru 3 of 3, dated 05/11/09, with revision B1 dated 04/16/14, prepared by W. W. Schaefer Engineering & Consulting, P.A., signed and sealed by Warren W. Schaefer, P.E.

B. TESTS

1. Test reports on: 1) Air Infiltration Test, per FBC, TAS 202-94
   2) Uniform Static Air Pressure Test, Loading per FBC, TAS 202-94
   3) Cyclic Wind Pressure Loading per FBC, TAS 203-94
   4) Large Missile Impact Test per FBC, TAS 201-94
   5) Cyclic Wind Pressure Loading per FBC, TAS 203-94

   along with marked-up drawings and installation diagram of a wood sidelite/transom window, prepared by Stork Twin City Testing Corporation, Test Report No. **STCTC-180-7762.1, .2, .3, .4 & .5**, dated 06/10/09, and addendum letter dated 01/19/10, all signed and sealed by Thomas A. Kolden, P.E.
   (Submitted under NOA No. 09-0901.10)

C. CALCULATIONS

1. Anchor verification calculations and structural analysis, complying with **FBC-2014**, dated 04/16/14, prepared by W. W. Schaefer Engineering & Consulting, P.A., signed and sealed by Warren W. Schaefer, P.E.
2. Glazing complies with **ASTM E1300-04**

D. QUALITY ASSURANCE

1. Miami-Dade Department of Regulatory and Economic Resources (RER)

E. MATERIAL CERTIFICATIONS

1. Notice of Acceptance No. **12-1231.10** issued to **Eastman Chemical Company (MA)** for their "**Saflex Clear and Color Glass Interlayers**" dated 03/28/13, expiring on 05/21/16.

Manuel Perez

Manuel Perez, P.E.
Product Control Examiner
NOA No. 17-0803.38
Expiration Date: March 10, 2020
Approval Date: November 09, 2017

NOTICE OF ACCEPTANCE: EVIDENCE SUBMITTED

F. STATEMENTS

1. Statement letter of conformance, complying with **FBC 5th Edition (2014)**, dated April 16, 2014, prepared by W. W. Schaefer Engineering & Consulting, P.A., signed and sealed by Warren W. Schaefer, P.E.
2. Statement letter of conformance, complying with **FBC-2010**, and of no financial interest, dated November 02, 2011, prepared by W. W. Schaefer Engineering & Consulting, P.A., signed and sealed by Warren W. Schaefer, P.E.
   (Submitted under NOA #11-1108.10)
3. Statement letter of conformance, complying with **FBC-2010**, and of no financial interest, dated August 25, 2009, prepared by W. W. Schaefer Engineering & Consulting, P.A., signed and sealed by Warren W. Schaefer, P.E.
   (Submitted under NOA #09-0901.10)
4. Laboratory compliance letter for Test Report No. **STCTC-180-7762.1, .2, .3, .4 & .5**, issued by Stork Twin City Testing Corporation, dated 01/19/10, signed and sealed by Tom Kolden, P.E.
   (Submitted under NOA No. 09-0901.10)

G. OTHERS

1. Notice of Acceptance No. **11-1108.10**, issued to Weather Shield Manufacturing, Inc. for their Series "1604" Alum Clad Wood Transom Windows – L.M.I., approved on 01/26/12 and expiring on 03/10/15.

2. NEW EVIDENCE SUBMITTED

A. DRAWINGS

1. None.

B. TESTS

1. None

C. CALCULATIONS

1. None

D. QUALITY ASSURANCE

1. Miami-Dade Department of Regulatory and Economic Resources (RER)

Manuel Perez

Manuel Perez, P.E.
Product Control Examiner
NOA No. 17-0803.38
Expiration Date: March 10, 2020
Approval Date: November 09, 2017

NOTICE OF ACCEPTANCE: EVIDENCE SUBMITTED

E. MATERIAL CERTIFICATIONS

1. Notice of Acceptance No. **17-0712.05** issued to **Eastman Chemical Company (MA)** for their "**Saflex Clear and Color Glass Interlayers**" dated 09/07/17, expiring on 05/21/21.

F. STATEMENTS

1. Statement letter of conformance, complying with **FBC 5th Edition (2014)**, and with **FBC 6th Edition (2017)**, dated July 21, 2017, issued by W. W. Schaefer Engineering & Consulting, P.A., signed and sealed by Warren W. Schaefer, P.E.

G. OTHERS

1. Notice of Acceptance No. **14-0513.06**, issued to Weather Shield Manufacturing, Inc. for their Series "1604" Alum Clad Wood Transom Windows – L.M.I., approved on 09/13/14 and expiring on 03/10/20.

Manuel Perez

Manuel Perez, P.E.
Product Control Examiner
NOA No. 17-0803.38
Expiration Date: March 10, 2020
Approval Date: November 09, 2017

GENERAL NOTES:

1. THESE WINDOW SYSTEMS HAVE BEEN TESTED, ANALYZED & APPROVED FOR DESIGN PRESSURES NOT TO EXCEED THOSE SHOWN IN THE "ALLOWABLE DESIGN PRESSURE TABLE(S).
2. OPENINGS, BUCKING & BUCKING FASTENERS MUST BE PROPERLY DESIGNED & INSTALLED TO TRANSFER WIND LOADS TO THE STRUCTURE.
3. ALL HARDWARE & FASTENERS SHALL BE IN ACCORDANCE WITH THESE DRAWINGS & SHALL NOT VARY UNLESS SPECIFICALLY MENTIONED ON THE DRAWINGS. SPECIFIED ANCHOR EMBED TO BASE MATERIAL SHALL BE BEYOND WALL FINISH OR STUCCO.
4. THE DETAILS & SPECIFICATIONS SHOWN HEREIN REPRESENT THE PRODUCTS TESTED & PROPOSED FOR WATER, AIR, IMPACT, CYCLIC & UNIFORM STATIC AIR PRESSURE TESTING IN CONFORMANCE WITH THE FLORIDA BUILDING CODE PROTOCALS TAS-201, 202 & 203 FOR LARGE MISSILE IMPACT WINDOWS.
5. THESE WINDOW SYSTEMS HAVE BEEN DESIGNED IN ACCORDANCE WITH AND MEET THE REQUIREMENTS OF THE FLORIDA BUILDING CODE (FBC) INCLUDING HIGH VELOCITY HURRICANE ZONES (HVHZ).
6. IMPACT SHUTTERS ARE NOT REQUIRED WITH THESE WINDOWS.
7. ALL ANCHORS SECURING WINDOW FRAME TO PRESSURE TREATED BUCKS OR WOOD FRAMING SHALL BE CAPABLE OF RESISTING CORROSION CAUSED BY THE PRESSURE TREATING CHEMICALS IN THE WOOD.
8. DETERMINE THE POSITIVE & NEGATIVE DESIGN LOADS TO USE WHEN REFERENCING THESE DOCUMENTS IN ACCORDANCE WITH THE GOVERNING CODE AND GOVERNING WIND VELOCITY. FOR WIND LOAD CALCULATIONS IN ACCORDANCE WITH THE FLORIDA BUILDING CODE, A DIRECTIONALITY FACTOR OF Kd = 0.85 MAY BE APPLIED PER THE ASCE-7 STANDARD.
9. NO INCREASE IN ALLOWABLE STRESS HAS BEEN USED IN THE CERTIFICATION OF THIS PRODUCT. WIND LOAD DURATION FACTOR Cd = 1.6 WAS USED FOR WOOD SCREW ANALYSIS ONLY.
10. MATERIALS, INCLUDING BUT NOT LIMITED TO STEEL SCREWS, THAT COME INTO CONTACT WITH OTHER DISSIMILAR MATERIALS SHALL MEET THE REQUIREMENTS OF FLORIDA BUILDING CODE CHAPTER 20.
11. All WOOD MEMBERS OF WINDOWS THAT MAY POSSIBLY COME INTO CONTACT WITH MASONRY OR CONCRETE SUBSTRATES, ARE SUBJECT TO MOISTURE &/OR ARE SUBJECT TO THE OUTSIDE ENVIRONMENT SHALL BE OF AN APPROVED DURABLE SPECIES OR BE TREATED IN AN APPROVED METHOD WITH AN APPROVED PRESERVATIVE PER FBC SECTION 2326.

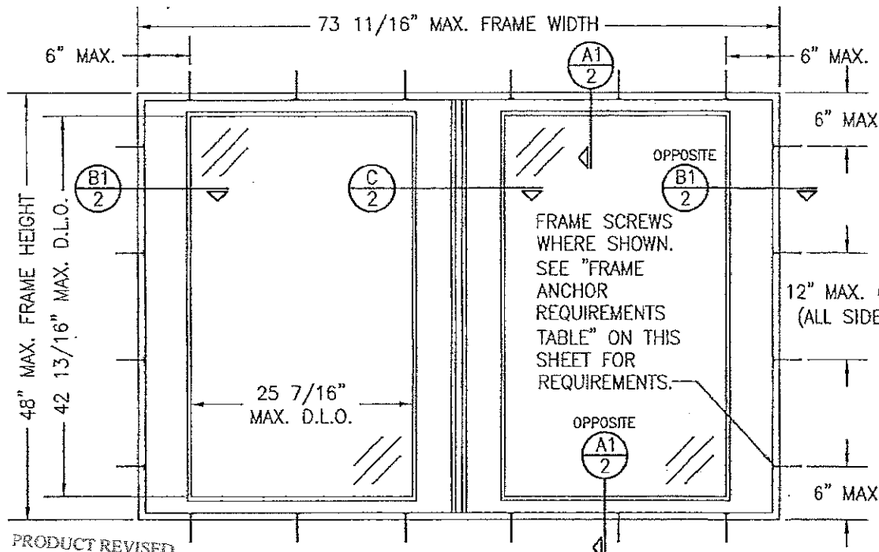

PRODUCT REVISED as complying with the Florida Building Code Acceptance No 17-0803.38 Expiration Date March 10, 2020 By Manuel Perez Miami-Dade Product Control

EXTERIOR ELEVATION:
DOUBLE SASH WINDOW
SCALE: 3/4" = 1'-0"
(FRAME SCREW MOUNT CONDITION)

ALLOWABLE DESIGN PRESSURE
+65/-85 PSF

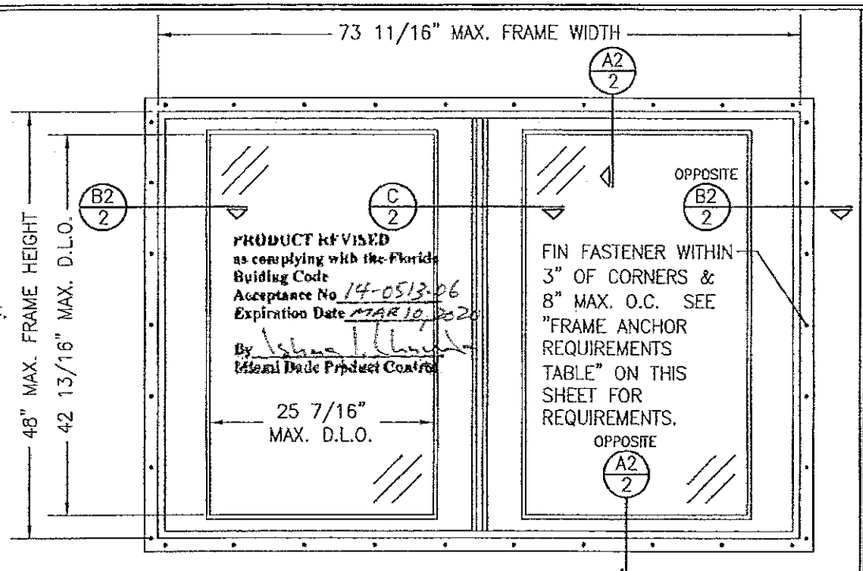

EXTERIOR ELEVATION:
DOUBLE SASH WINDOW
SCALE: 3/4" = 1'-0"
(NAIL FIN MOUNT CONDITION)

CORNER CONSTRUCTION:

FRAME CORNERS: MEMBERS ARE RABBETED, BUTTED & SECURED WITH (3)THREE NO. 6 X 2" WOOD SCREWS THROUGH THE VERTICAL MEMBER INTO THE HORIZONTAL MEMBER. CORNERS ARE SEALED WITH SILICONE SEALANT.
SASH CORNERS: MEMBERS ARE BUTTED TOGETHER, JOINED WITH (1)ONE 3/4"ø X 3" WOOD DOWEL PER CORNER. CORNERS ARE SEALED WITH WOOD GLUE THAT SECURES THE DOWEL.
FRAME CLADDING CORNERS: CLADDING IS MITERED TOGETHER & JOINED WITH (1)ONE NO. 6 X 1 1/8" PFH SS SCREW PER CORNER. CORNERS ARE SEALED WITH SILICONE SEALANT.
SASH CLADDING: CLADDING IS SQUARE CUT & SECURED TO THE SASH. CORNERS ARE SEALED WITH SILICONE SEALANT.

FRAME ANCHOR REQUIREMENTS TABLE

OPENING TYPE (SUBSTRATE)	FRAME & NAIL FIN TO OPENING FASTENER TYPE	MINIMUM EMBED	MINIMUM EDGE DIST.
FRAME SCREWS			
(2) MIN. 2X6 WOOD FRAME OR BUCK (MIN. GR. 3 & G=0.55)	NO. 10 SMS OR WOOD SCREW	1 1/4"	3/4"
MIN. 18 GA. 33 KSI METAL STUD	NO. 10 GR. 5 SELF TAP/DRILL SCREW	FULL	1/2"
MIN. 1/8" THK A36 STEEL	NO. 10 GR. 5 SELF TAP/DRILL SCREW	FULL	1/2"
MIN. 1/8" THK 6063-T5 ALUM.	NO. 10 GR. 5 SELF TAP/DRILL SCREW	FULL	1/2"
C-90 CMU/2500 PSI CONCRETE	(1) 1/4" CONCRETE SCREW	1 1/4"	2"
NAILING FIN FASTENERS			
MIN. 2X4 WOOD FRAME OR BUCK (MIN. GR. 3 & G=0.55)	NO. 8 SMS SCREW	1 3/8"	1/2"
MIN. 1/8" THK A36 STEEL	NO. 8 GR. 5 SELF TAP/DRILL SCREW	FULL	1/2"
MIN. 1/8" THK 6063-T5 ALUM.	NO. 8 GR. 5 SELF TAP/DRILL SCREW	FULL	1/2"

(1) CONCRETE SCREWS SHALL BE ELCO ULTRACONS (C.S.), ELCO CRETE-FLEX (S.S.), ITW RAMSET/RED HEAD TAPCONS (C.S. OR S.S.) OR HILTI KWIK-CON II (C.S OR S.S.).
(2) WOOD BUCKS MAY BE RIPPED DOWN TO 4 1/2" TO MEET JAMB DEPTH

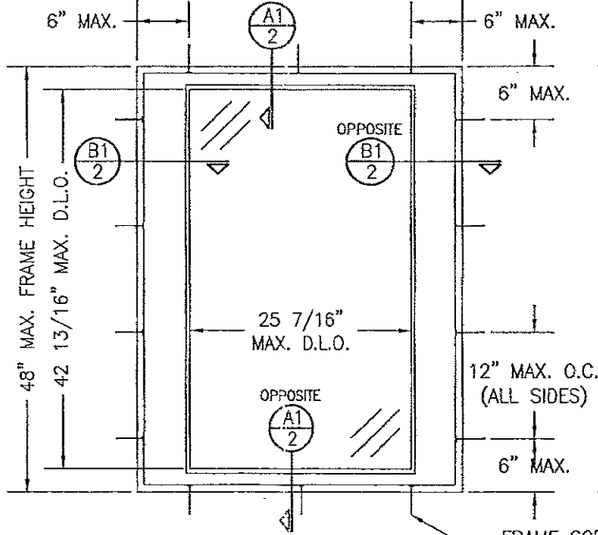

EXTERIOR ELEVATION:
SINGLE SASH WINDOW
SCALE: 3/4" = 1'-0"
(FRAME SCREW MOUNT CONDITION)

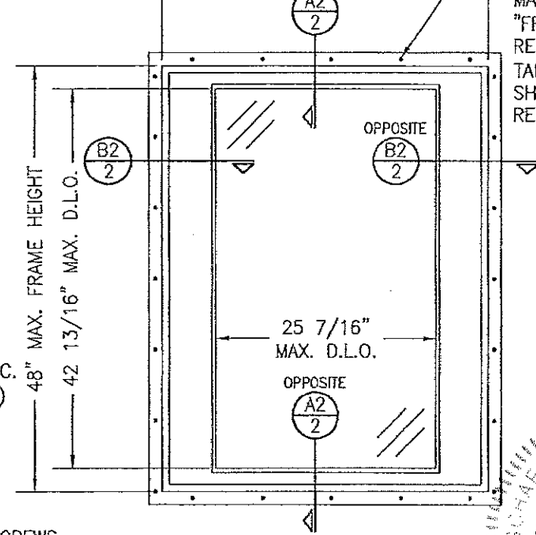

EXTERIOR ELEVATION:
SINGLE SASH WINDOW
SCALE: 3/4" = 1'-0"
(NAIL FIN MOUNT CONDITION)

THESE DRAWINGS ARE APPLICABLE ONLY TO THE PRODUCT SPECIFIED. THEY MAY NOT BE USED FOR THE ASSEMBLY AND/OR INSTALLATION OF ANY OTHER PRODUCT NOR MAY THEY BE USED FOR RATIONAL AND/OR LOCAL APPROVAL OF ANY PRODUCT NOT PRODUCED BY THE MANUFACTURER STATED ON THESE DRAWINGS.

DRAWN BY: W.R.M. | CHECKED BY: W.W.S.
PLOT: 1=16 | DATE: 05/11/09

NO.	REVISION DESCRIPTION	BY	DATE
A1	UPDATE CONSULTANTS ADDRESS	W.R.M.	11/02/11
B1	UPDATE TO CURRENT CODE	W.W.S.	04/16/14

MANUFACTURER
WEATHER SHIELD WINDOWS & DOORS
ONE WEATHER SHIELD PLAZA
MEDFORD, WI 54451
715-748-6555

DRAWING TITLE
1604 ALUMINUM CLAD TRANSOM WINDOW

CONSULTANTS
W. W. SCHAEFER ENGINEERING & CONSULTING, P.A. (CA 6809)
7480 150TH COURT NORTH
PALM BEACH GARDENS, FL 33418
PHONE: 561-744-3424

CERTIFICATION
APR 16 2014
WARREN W. SCHAEFER P.E.
P.E. NO. 44135
STATE OF FLORIDA

DRAWING NO. 1651 | REV. A
SHEET NO. 1 OF 3

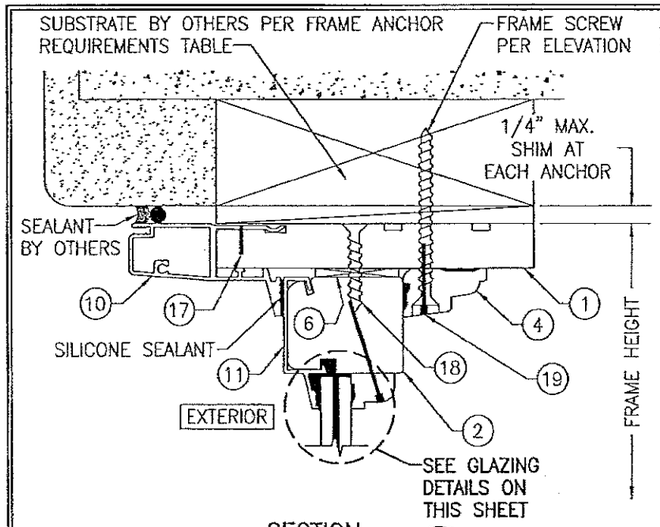

SECTION A1/2
SCALE: 1/2 FULL
(FRAME SCREW MOUNT)

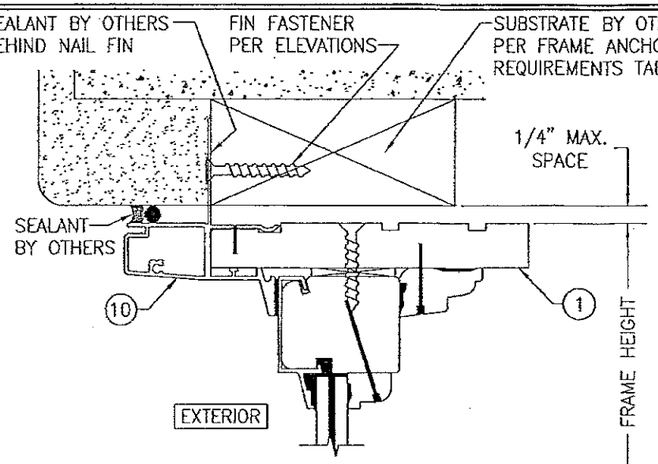

SECTION A2/2
SCALE: 1/2 FULL
(NAIL FIN MOUNT)
(FOR DETAILS NOT SHOWN SEE SECTION A1/2)

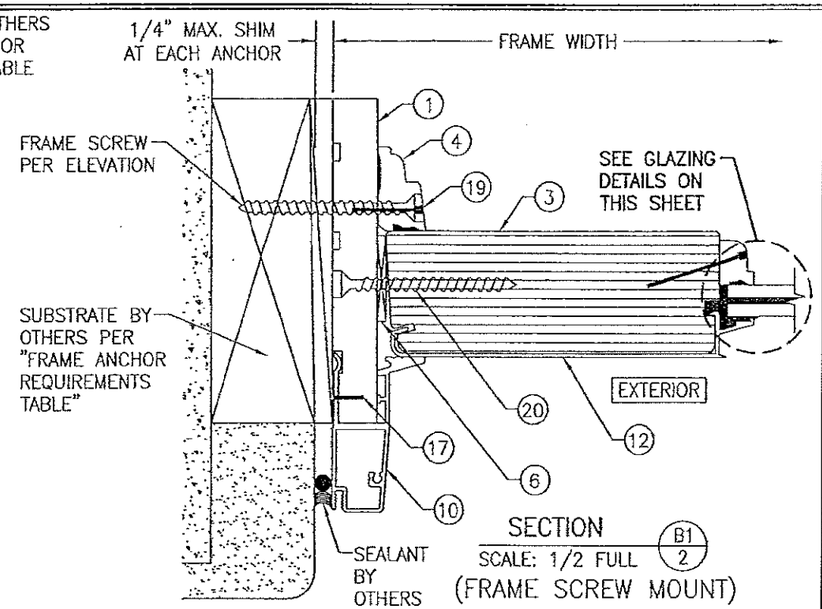

SECTION B1/2
SCALE: 1/2 FULL
(FRAME SCREW MOUNT)

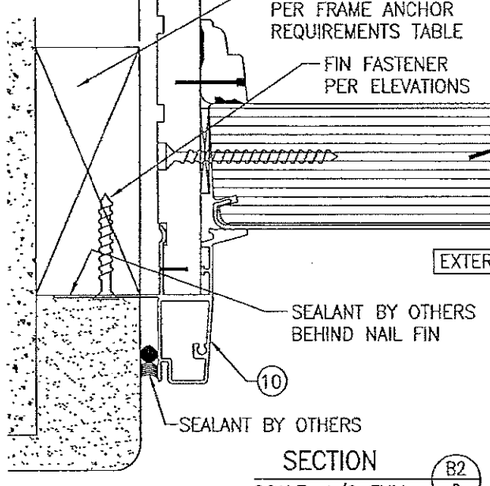

SECTION B2/2
SCALE: 1/2 FULL
(NAIL FIN MOUNT)
(FOR DETAILS NOT SHOWN SEE SECTION B1/2)

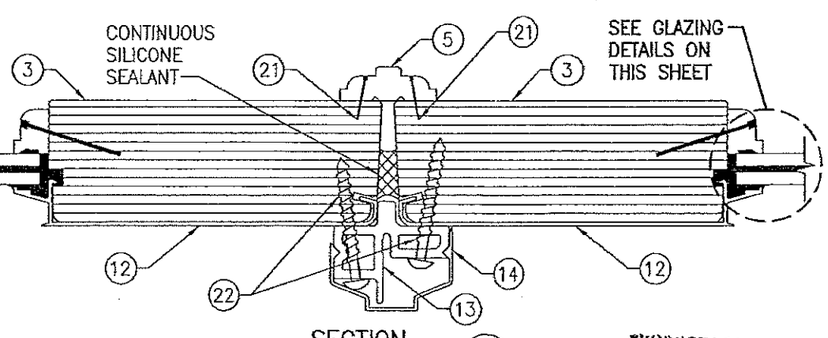

SECTION C/2
SCALE: 1/2 FULL

PRODUCT REVISED
as complying with the Florida Building Code
Acceptance No 14-0513.06
Expiration Date 3/10/20
By Ishaq I. Chanda
Miami-Dade Product Control

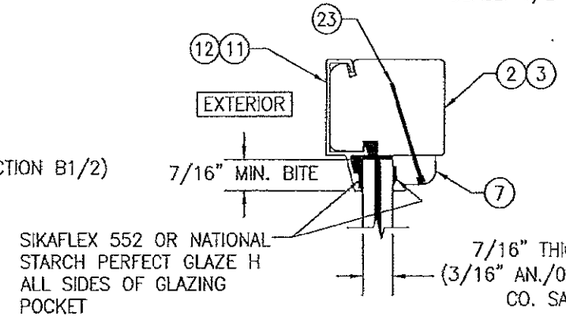

TYPICAL GLAZING DETAIL

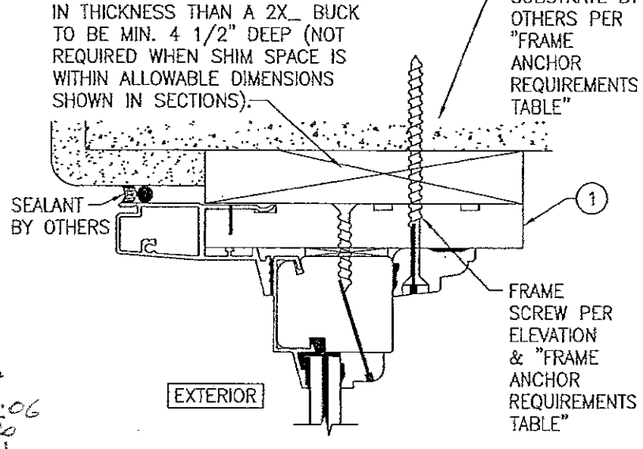

OPTIONAL DIRECT MOUNT DETAIL TO SUBSTRATE WITH SPACER
(HEAD SECTION SHOWN, SILL & SIDES ARE INSTALLED THE SAME)
(FOR DETAIL NOT SHOWN, SEE OTHER SECTIONS)

PRODUCT REVISED
as complying with the Florida Building Code
Acceptance No 17-0803.38
Expiration Date March 10, 2020
By Manuel Perez
Miami-Dade Product Control

WARREN W. SCHAEFER LICENSE NO. 44135 STATE OF FLORIDA PROFESSIONAL ENGINEER

DRAWN BY: W.R.M.	CHECKED BY: W.W.S.
PLOT: 1=2	DATE: 05/11/09

NO.	REVISION DESCRIPTION	BY	DATE

DRAWING TITLE
1604 ALUMINUM CLAD TRANSOM WINDOW

MANUFACTURER
WEATHER SHIELD WINDOWS & DOORS
ONE WEATHER SHIELD PLAZA
MEDFORD, WI 54451
715-748-6555

CONSULTANTS
W. W. SCHAEFER ENGINEERING & CONSULTING, P.A. (CA 6809)
7480 150TH COURT NORTH
PALM BEACH GARDENS, FL 33418
PHONE: 561-744-3424

CERTIFICATION
APR 16 2014
WARREN W. SCHAEFER, P.E.
P.E. NO. 44135

DRAWING NO. 1651 REV. B
SHEET NO. 2 OF 3

ITEM #	ITEM DESCRIPTION	MANUFACTURER/NOTES
	PARTS	
1	FRAME (TRANSOM WINDOW)	WOOD (FINGER JOINTED)
2	HEAD & SILL RAIL	WOOD
3	STILE	MICROLLAM LVL BY WEYERHAEUSER (PER CURRENT N.O.A.) (E MIN.=1,900,000 PSI; Fb MIN.=2,600 PSI)
4	SASH STOP	WOOD (FINGER JOINTED)
5	INTERIOR MEETING STILE COVER	WOOD
6	SHIM BLOCK	WOOD
7	GLAZING BEAD	WOOD
10	FRAME CLADDING	6063-T5 ALUMINUM
11	TOP & BOTTOM RAIL CLADDING	6063-T5 ALUMINUM
12	STILE CLADDING	6063-T5 ALUMINUM
13	EXTERIOR ASTRAGAL	6063-T5 ALUMINUM
14	EXTERIOR ASTRAGAL COVER	6063-T5 ALUMINUM
	FASTENERS	
17	18 GA. X 1/2" X 1/2" STAPLE	WITHIN 2" FROM ENDS & 7-9" O.C.
18	NO. 8 X 1 1/4" WOOD SCREW	WITHIN 6" FROM ENDS & 10" O.C.
19	F16 X 1" BRAD NAIL	WITHIN 2" FROM ENDS & 9" O.C.
20	NO. 8 X 2 1/2" WOOD SCREW	WITHIN 6" FROM ENDS & 10" O.C.
21	18 GA. X 1/2" X 1" STAPLE (2 ROWS)	WITHIN 2" FROM ENDS & 8" O.C.
22	NO. 8 X 1 3/4" P.H. WOOD SCREW (2 ROWS)	WITHIN 2" FROM ENDS & 8" O.C.
23	F16 X 1 1/2" BRAD NAIL	WITHIN 2" FROM CORNERS & 12" O.C.

NOTE: WOOD USED IN TESTING WAS PONDEROSA PINE WITH A SPECIFIC GRAVITY OF G = 0.43 AND A MODULUS OF ELASTICITY OF E = 1,200,000 PSI. OTHER WOOD SPECIES APPLICABLE FOR USE WITH THIS PRODUCT ARE THOSE WITH A SPECIFIC GRAVITY OF 0.43 AND MODULUS OF ELASTICITY OF 1,200,000 PSI OR GREATER. ALL WOOD IS MINIMUM GRADE 2 MILLED WEATHER SHIELD TO SELECT.

PRODUCT REVISED
as complying with the Florida
Building Code
Acceptance No 14-0513-06
Expiration Date March 10, 2020
By
Miami Dade Product Control

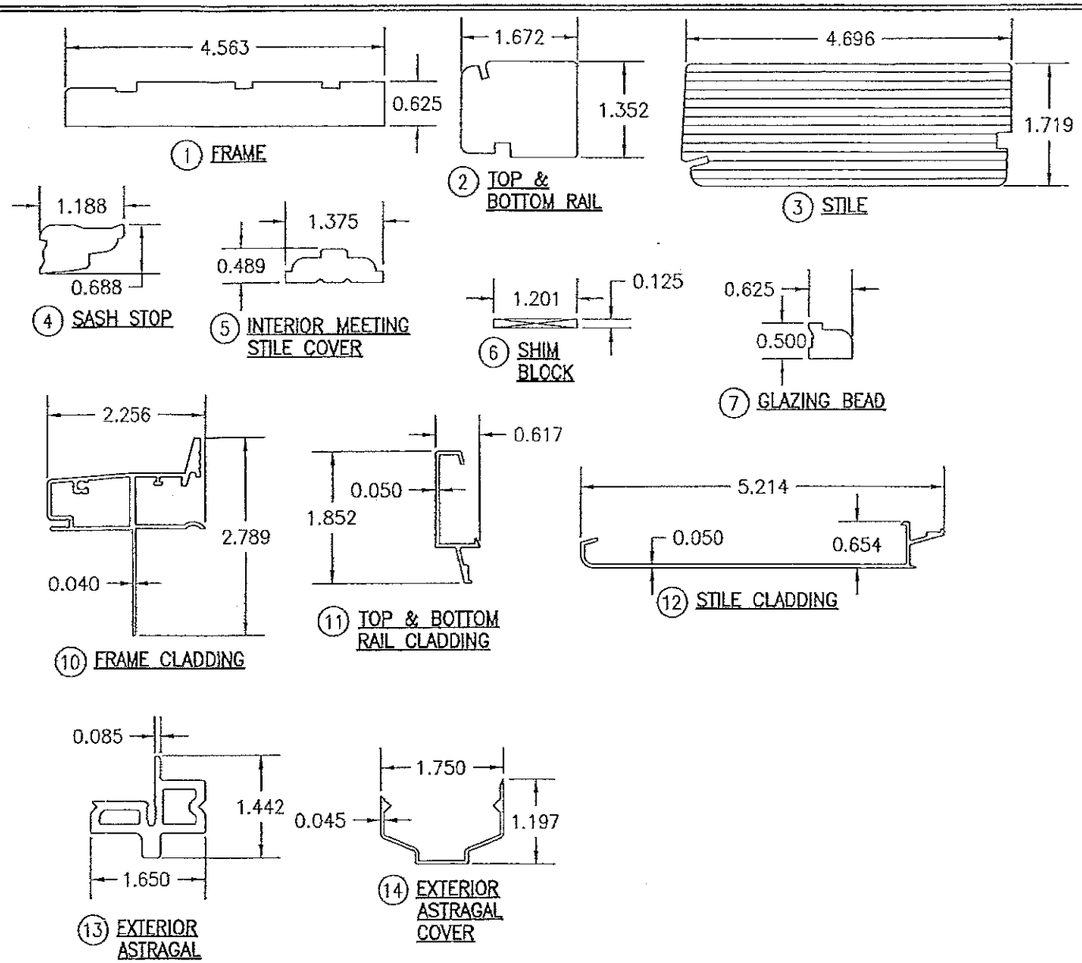

PRODUCT REVISED
as complying with the Florida
Building Code
Acceptance No 17-0803.38
Expiration Date March 10, 2020
By
Miami Dade Product Control

WARREN W. SCHAEFER LICENSE NO. 44135 STATE OF FLORIDA PROFESSIONAL ENGINEER

DRAWN BY: W.R.W.	CHECKED BY: W.W.S.
PLOT: 1=2	DATE: 05/11/09

NO.	REVISION DESCRIPTION	BY	DATE

DRAWING TITLE
1604 ALUMINUM CLAD TRANSOM WINDOW

MANUFACTURER
WEATHER SHIELD WINDOWS & DOORS
ONE WEATHER SHIELD PLAZA
MEDFORD, WI 54451
715-748-6555

CONSULTANTS
W. W. SCHAEFER ENGINEERING & CONSULTING, P.A. (CA 6809)
7480 150TH COURT NORTH
PALM BEACH GARDENS, FL 33418
PHONE: 561-744-3424

CERTIFICATION
APR 16 2014
WARREN W. SCHAEFER, P.E.
P.E. NO. 44135

DRAWING NO. 1651 | REV. B
SHEET NO. 3 OF 3