MIAMI-DADE COUNTY
PRODUCT CONTROL SECTION
11805 SW 26 Street, Room 208
Miami, Florida 33175-2474
T (786) 315-2590 F (786) 315-2599
www.miamidade.gov/economy

DEPARTMENT OF REGULATORY AND ECONOMIC RESOURCES (RER)
BOARD AND CODE ADMINISTRATION DIVISION

NOTICE OF ACCEPTANCE (NOA)

Clopay Building Products Company
8585 Duke Boulevard
Mason, OH 45040

SCOPE:

This NOA is being issued under the applicable rules and regulations governing the use of construction materials. The documentation submitted has been reviewed and accepted by Miami-Dade County RER-Product Control Section to be used in Miami Dade County and other areas where allowed by the Authority Having Jurisdiction (AHJ).

This NOA shall not be valid after the expiration date stated below. The Miami-Dade County Product Control Section (In Miami Dade County) and/or the AHJ (in areas other than Miami Dade County) reserve the right to have this product or material tested for quality assurance purposes. If this product or material fails to perform in the accepted manner, the manufacturer will incur the expense of such testing and the AHJ may immediately revoke, modify, or suspend the use of such product or material within their jurisdiction. RER reserves the right to revoke this acceptance, if it is determined by Miami-Dade County Product Control Section that this product or material fails to meet the requirements of the applicable building code.

This product is approved as described herein, and has been designed to comply with the Florida Building Code, including the High Velocity Hurricane Zone.

DESCRIPTION: Modern 2" Intellicore W8 DP46T Steel Sectional Garage Door up to 16'-2" Wide w/ Optional Impact Resistant Lites

APPROVAL DOCUMENT: Drawing No. **105002**, titled "Modern Steel 2" Intellicore +46/-52 psf to 16' Wide", sheets 1 through 4 of 4, dated 05/25/2016, with revision 1 dated 07/18/2017, prepared by Clopay Building Products Company, signed and sealed by Mark Westerfield, P.E., bearing the Miami-Dade County Product Control revision stamp with the Notice of Acceptance number and expiration date by the Miami-Dade County Product Control Section.

MISSILE IMPACT RATING: Large and Small Missile Impact Resistant

LABELING: A permanent label with the manufacturer's name or logo, manufacturing address, model number, the positive and negative design pressure rating, indicate impact rated if applicable, installation instruction drawing reference number, approval number (NOA), the applicable test standards, and the statement reading 'Miami-Dade County Product Control Approved' is to be located on the door's side track, bottom angle, or inner surface of a panel.

RENEWAL of this NOA shall be considered after a renewal application has been filed and there has been no change in the applicable building code negatively affecting the performance of this product.

TERMINATION of this NOA will occur after the expiration date or if there has been a revision or change in the materials, use, and/or manufacture of the product or process. Misuse of this NOA as an endorsement of any product, for sales, advertising or any other purposes shall automatically terminate this NOA. Failure to comply with any section of this NOA shall be cause for termination and removal of NOA.

LIMITATION: This approval requires the manufacturer to do testing of all coils used to fabricate door panels. A minimum of 2 specimens shall be cut from each coil and tensile tested according to ASTM E-8 by a Miami-Dade County approved laboratory. Every 3 months, the manufacturer shall mail to this office a copy of the tested reports. Only coils with average yield strength of 30,000 psi or more shall be used to make door panels for Miami-Dade County under this Notice of Acceptance.

ADVERTISEMENT: The NOA number preceded by the words Miami-Dade County, Florida, and followed by the expiration date may be displayed in advertising literature. If any portion of the NOA is displayed, then it shall be done in its entirety.

INSPECTION: A copy of this entire NOA shall be provided to the user by the manufacturer or its distributors and shall be available for inspection at the job site at the request of the Building Official.

This NOA **revises NOA #16-0607.10** and consists of this page 1 and evidence pages E-1 and E-2, as well as approval document mentioned above.

The submitted documentation was reviewed by **Carlos M. Utrera, P.E.**

MIAMI-DADE COUNTY APPROVED

11/17/2017

NOA No 17-0809.30
Expiration Date: July 21, 2021
Approval Date: November 30, 2017

NOTICE OF ACCEPTANCE: EVIDENCE SUBMITTED

1. EVIDENCE SUBMITTED UNDER NOA #16-0607.10

A. DRAWINGS

1. Drawing No. **105002**, titled "Modern Steel 2" Intellicore +46/-52 psf to 16' Wide", sheets 1 through 4 of 4, dated 05/25/2016, prepared by Clopay Building Products Company, signed and sealed by Mark Westerfield, P.E.

B. TESTS

1. Test reports on 1) Uniform Static Air Pressure Test, Loading per FBC TAS 202-94
   2) Large Missile Impact Test per FBC, TAS 201-94
   3) Cyclic Wind Pressure Loading per FBC, TAS 203-94
   4) Forced Entry Test, per FBC, TAS 202-94
   5) Tensile Test per ASTM E8

   along with marked-up drawings and installation diagram of 16'2"x 8', 27ga (0.016") steel garage doors Model 9202W8 with Lexan polycarbonate windows, prepared by American Test Lab, Inc., Test Report No. **ATLNC 0330.01-15**, dated 04/16/2015, signed and sealed by David W. Johnson, P.E.
2. Test reports on 1) Uniform Static Air Pressure Test, Loading per FBC TAS 202-94
   2) Large Missile Impact Test per FBC, TAS 201-94
   3) Cyclic Wind Pressure Loading per FBC, TAS 203-94
   4) Forced Entry Test, per FBC, TAS 202-94
   5) Tensile Test per ASTM E8

   along with marked-up drawings and installation diagram of 16'2"x 8', 27ga steel garage door Model GD2LPW8 with MAK SL and/or MAK 15 windows, prepared by American Test Lab, Inc., Test Report No. **ATLNC 1105-01-13**, dated 01/14/2014, signed and sealed by David W. Johnson, P.E.
3. Test report on Salt Spray per ASTM B117 of painted G40 galvanized painted and G90 panels, prepared by Fenestration Testing Laboratory, Inc., Test Report No.**7890**, dated 10/01/2014, signed by Idalmis Ortega, P.E.

C. CALCULATIONS

1. Jamb anchor calculations prepared by Clopay Building Products Company, dated 06/01/2016, signed and sealed by Mark Westerfield, P.E.

D. QUALITY ASSURANCE

1. Miami-Dade Department of Regulatory and Economic Resources (RER)

11/17/2017

Carlos M. Utrera, P.E.
Product Control Examiner
NOA No 17-0809.30
Expiration Date: July 21, 2021
Approval Date: November 30, 2017

NOTICE OF ACCEPTANCE: EVIDENCE SUBMITTED

E. MATERIAL CERTIFICATIONS

1. Notice of Acceptance No. **15-0915.08** issued to SABIC Innovative Plastics, US LLC for their Lexan Polycarbonate Sheet Products, approved on 12/10/2015, expiring on 07/17/2018.
2. Notice of Acceptance No. **17-0410.01** issued to Covestro LLC for their Makrolon Polycarbonate Sheets, approved on 06/08/2017, expiring on 08/27/2022.
3. Test report on Surface Burning Characteristics, per ASTM E84 of the polyurethane foam insulation, prepared by QAI Laboratories, Test Report No. **RJ2814-3**, dated 10/14/2013, signed by Greg Banasky.
4. Test report on Ignition Temperature of Plastics of the polyurethane foam insulation per ASTM D1929, prepared by UL LLC, Test Report No. **4786399941/ R5692**, dated 05/20/2014, signed by James Smith.

F. STATEMENTS

1. Statement letter of code conformance to 5th edition (2014) FBC issued by Clopay Building Products Company, dated 06/01/2016, signed and sealed by Mark Westerfield, P.E.
2. Statement letter of no financial interest issued by Clopay Building Products Company, dated 06/01/2016, signed and sealed by Mark Westerfield, P.E.

2. NEW EVIDENCE SUBMITTED

A. DRAWINGS

1. Drawing No. **105002**, titled "Modern Steel 2" Intellicore +46/-52 psf to 16' Wide", sheets 1 through 4 of 4, dated 05/25/2016, with revision 1 dated 07/18/2017, prepared by Clopay Building Products Company, signed and sealed by Mark Westerfield, P.E.

B. TESTS

1. None.

C. CALCULATIONS

1. None.

D. QUALITY ASSURANCE

1. Miami-Dade Department of Regulatory and Economic Resources (RER)

E. MATERIAL CERTIFICATIONS

1. None.

F. STATEMENTS

1. Statement letter of code conformance to 2010, 5th Edition (2014) and 6th Edition (2017) FBC issued by Clopay Building Products Company, dated 08/02/2017, signed and sealed by Mark Westerfield, P.E.

11/17/2017

Carlos M. Utrera, P.E.
Product Control Examiner
NOA No 17-0809.30
Expiration Date: July 21, 2021
Approval Date: November 30, 2017

BRAND	MODERN STEEL		COMMERCIAL DOORS	
	FLUSH	GROOVED	FLUSH	GROOVED
CLOPAY	9208, HDPCC2	9209, HDPCR2	3728	3729
HOLMES	7208	7209	--	C7R20

SHEET: 1 OF 4

REVISIONS					
REV. NO.	ZONE:	DATE:	ECN NO.	APPVD:	DESCRIPTION
00	–	5/2016	–	MWW	REVISED FOR RELEASE.
01	–	7/18/17	–	SH	UPDATED CODE COMPLIANCE STATEMENT TO ADD 6TH EDITION FBC.

MIXED GLAZING SHOWN.

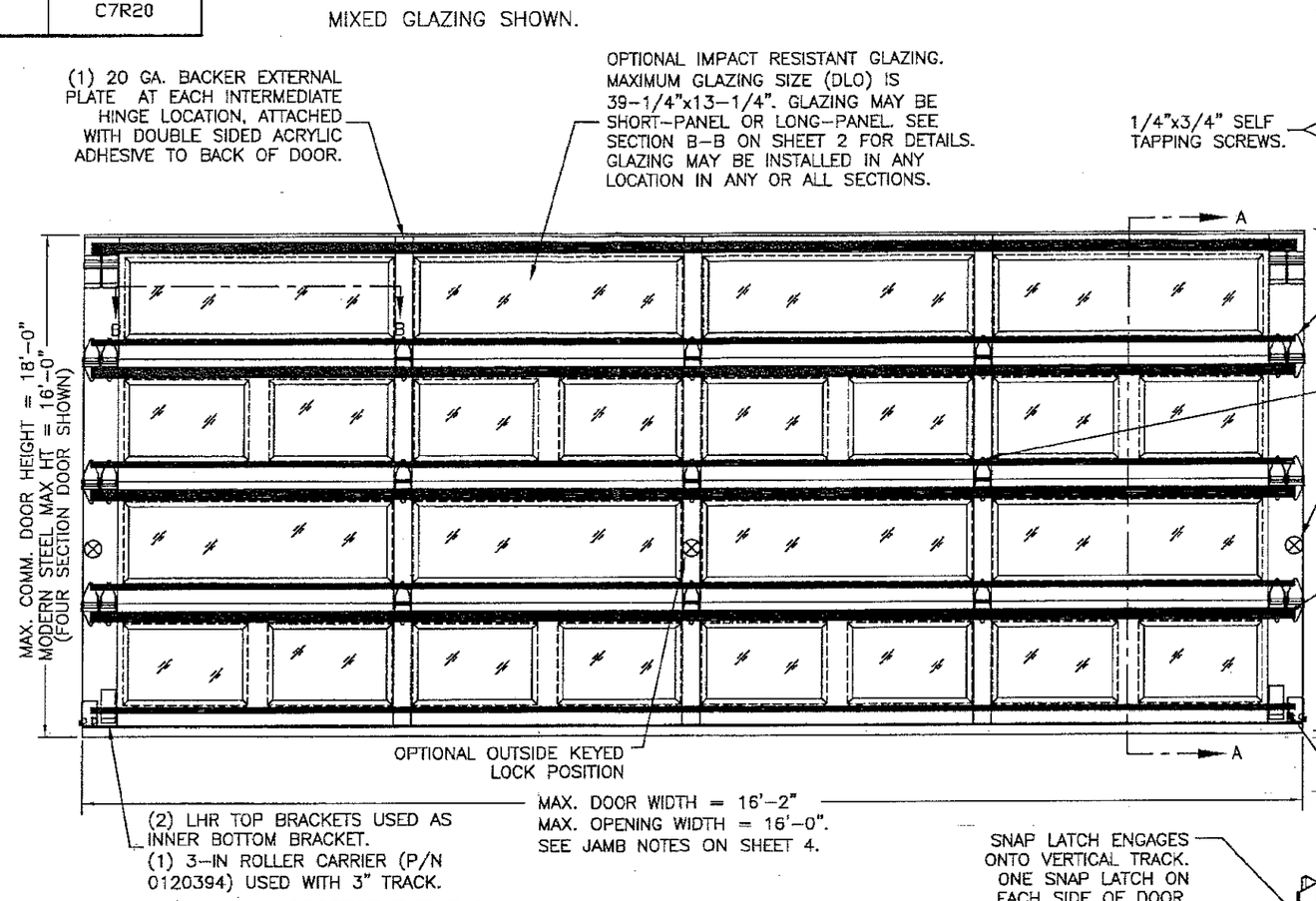

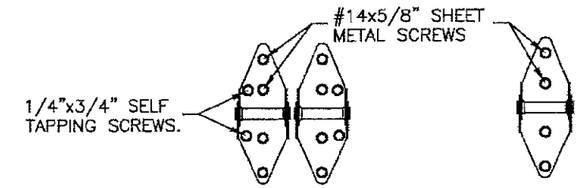

14 GA. END HINGES VIEW "B"

14 GA. INTERMEDIATE HINGE VIEW "C"

DOOR HEIGHT	# OF SECTIONS	# OF U-BARS	# OF T-STRUTS
6'3" TO 8'0"	4	4	4
8'3" TO 10'0"	5	5	5
10'3" TO 12'0"	6	6	6
12'3" TO 14'0"	7	7	7
14'3" TO 16'0"	8	8	8
16'3" TO 18'0"	9	9	9
MAX SECTION HEIGHT: 24"			

THIS PRODUCT CONFORMS TO THE REQUIREMENTS OF THE 2010 FBC, THE FIFTH EDITION FBC, AND THE SIXTH EDITION FBC.

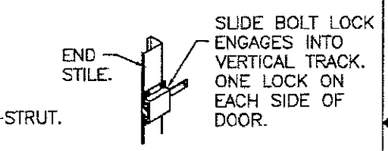

INSIDE SLIDE BOLT LOCK OPTION.

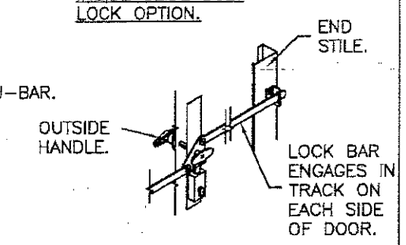

OUTSIDE KEYED LOCK WITH LOCK BAR LOCKING.

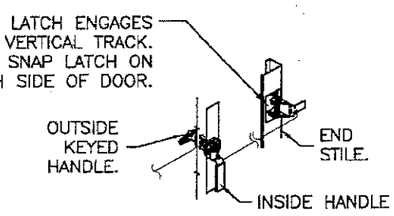

OUTSIDE KEYED LOCK WITH SNAP LATCH LOCK OPTION.

REPRESENTATIVE GLAZING PATTERNS.

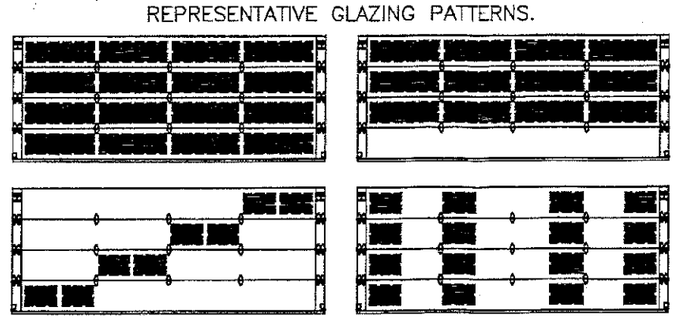

GLAZING MAY BE IN ANY LOCATION IN ANY OR ALL SECTIONS. THESE PATTERNS ARE REPRESENTATIVE OF THE APPROVED CONFIGURATIONS. NOT ALL CONFIGURATIONS ARE AVAILABLE AS STANDARD PRODUCT. CONSULT FACTORY FOR DETAILS.

DESIGN LOADS: +46.0 PSF & -52.0 PSF

PRODUCT REVISED
as complying with the Florida Building Code
NOA-No. 17-0809.30
Expiration Date 07/21/2021
By
Miami-Dade Product Control

DESIGN ENGINEER:
MARK WESTERFIELD, P.E.
FLORIDA LICENSE No. 48495

Unless Stated Otherwise TOLERANCES are
.0 = ±.031
.00 = ±.015
.000 = ±.005
.0000 = ±.001
Degrees = ±1/2°
Unless Stated Otherwise DIMENSIONS ARE IN INCHES.

Clopay Building Products Company
8585 Duke Boulevard
Mason, OH 45040 USA
Tel. No. 513-770-4800
Fax No. 513-770-4853

MANUFACTURING PRODUCT CODE DSIU-1F477			
PART NO.: N/A			
WINDLOAD RATING W8 DP46T			
DESCRIPTION: MODERN STEEL 2" INTELLICORE +46/-52 PSF TO 16' W			
DRAWN BY: SH	DATE: 12/2015	SCALE: NTS	DWG. SIZE B
CHECKED BY: MWW	DATE: 5/25/16	SHEET 1 OF 4	
DWG. NO.: 105002		VER: M-D	

BRAND	MODERN STEEL		COMMERCIAL DOORS	
	FLUSH	GROOVED	FLUSH	GROOVED
CLOPAY	9208, HDPCC2	9209, HDPCR2	3728	3729
HOLMES	7208	7209	--	C7R20

SHEET: 2 OF 4

REVISIONS					
REV. NO.	ZONE:	DATE:	ECN NO.	APPVD:	DESCRIPTION
01	–	–	–	–	SEE REVISION HISTORY ON SHEET ONE.

IMPACT–RESISTANT CONSTRUCTION:

SOLID DOORS (NO GLAZING) OR DOORS WITH OPTIONAL IMPACT–RESISTANT GLAZING ARE IMPACT–RESISTANT. OPTIONAL IMPACT RESISTANT ASSEMBLY CONSISTS OF ALUMINUM FRONT FRAME AND SABIC IP LEXAN 9034 (VERSIONS ALSO APPROVED: MR10, 9030, 90318, 90316, 90317, 90311, 90314, 90355) OR BAYER MAKROLON GP (VERSIONS ALSO APPROVED: SL, AR, 15), APPROVED CC1 PLASTICS IN ACCORDANCE WITH IBC/FBC 2606 AND APPROVED C1 PLASTICS IN ACCORDANCE WITH FBC 2612.
THE ENTIRE DOOR ASSEMBLY INSTALLED IN COMPLIANCE WITH THIS SECTION MEETS THE WIND LOAD REQUIREMENTS OF THE FLORIDA BUILDING CODE AND INTERNATIONAL BUILDING CODE AND IS LARGE– AND SMALL–MISSILE IMPACT RESISTANT.

SECTION B–B (IMPACT–RESISTANT GLAZING OPTION)

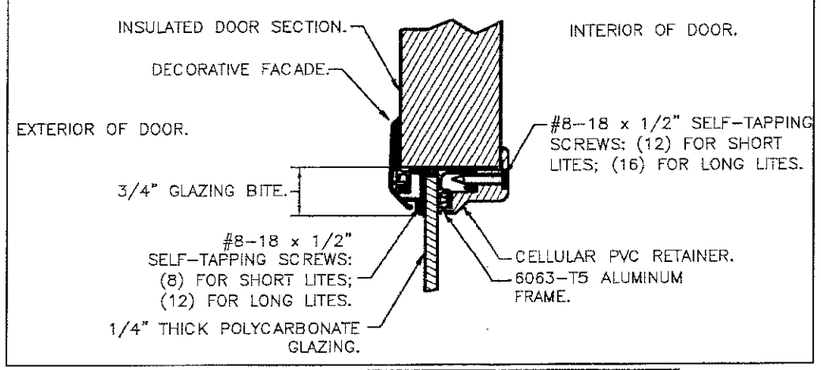

IMPACT–RESISTANT GLAZING DETAILS

MARK WESTERFIELD LICENSE No. 48495 STATE OF TEXAS PROFESSIONAL ENGINEER

PRODUCT REVISED
as complying with the Florida Building Code
NOA-No. 17-0809.30
Expiration Date 07/21/2021
By
Miami-Dade Product Control

DESIGN ENGINEER:
MARK WESTERFIELD, P.E.
FLORIDA LICENSE No. 48495

DESIGN LOADS: +46.0 PSF & –52.0 PSF

Unless Stated Otherwise TOLERANCES are
.0 = ±.031
.00 = ±.015
.000 = ±.005
.0000 = ±.001
Degrees = ±1/2°
Unless Stated Otherwise DIMENSIONS ARE IN INCHES.

Clopay Building Products Company
8585 Duke Boulevard
Mason, OH 45040 USA
Tel. No. 513–770–4800
Fax No. 513–770–4853

MANUFACTURING PRODUCT CODE DSIU-1F477			
PART NO.: N/A			
WINDLOAD RATING W8 DP46T			
DESCRIPTION: MODERN STEEL 2" INTELLICORE +46/–52 PSF TO 16' W			
DRAWN BY: SH	DATE: 12/2015	SCALE: NTS	DWG. SIZE B
CHECKED BY: MWW	DATE: 5/25/2016	SHEET 2 OF 4	
DWG. NO.: 105002		VER: M–D	

BRAND	MODERN STEEL		COMMERCIAL DOORS	
	FLUSH	GROOVED	FLUSH	GROOVED
CLOPAY	9208, HDPCC2	9209, HDPCR2	3728	3729
HOLMES	7208	7209	--	C7R20

SHEET: 3 OF 4

REVISIONS					
REV. NO.	ZONE:	DATE:	ECN NO.	APPVD:	DESCRIPTION
01	–	–	–	–	SEE REVISION HISTORY ON SHEET ONE.

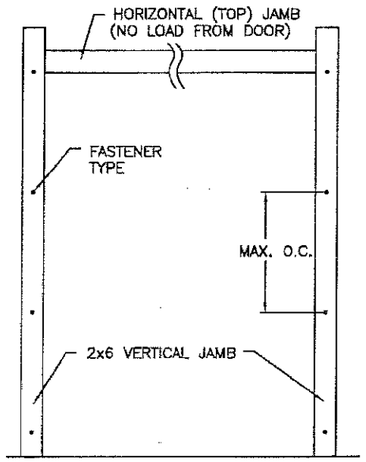

JAMB TO SUPPORTING STRUCTURE ATTACHMENT

NOTES:
1. ALL THE LOAD FROM THE DOOR IS TRANSFERRED TO THE TRACK AND THEN FROM THE TRACK TO THE 2x6 VERTICAL SYP (GRADE #2 OR BETTER) JAMBS. NO LOAD FROM THE DOOR IS TRANSFERRED TO THE HORIZONTAL (TOP) JAMB.
2. EACH VERTICAL JAMB SEES A MAXIMUM DESIGN LOAD OF +368 LB & −416 LB. PER LINEAR FOOT OF JAMB.
3. ALL JAMB FASTENERS MAY BE (BUT ARE NOT REQUIRED TO BE) COUNTERSUNK TO PROVIDE A FLUSH MOUNTING SURFACE.
4. A 1/3 STRESS INCREASE FOR WIND LOAD WAS NOT USED IN THE CALCULATION OF ALLOWABLE LOADS FOR ANCHORS AND FASTENERS FOR STEEL, CONCRETE AND MASONRY.

NOTE: 2x6 WOOD JAMBS ARE NOT REQUIRED WITH CONTINUOUS ANGLE MOUNT TRACK. HOWEVER, IF DESIRED ON STEEL JAMBS OR CONCRETE OR BLOCK WALLS, APPROVED FASTENERS AS DETAILED BELOW SHOULD BE INCREASED IN LENGTH BY 1-1/2" AND INSTALLED DIRECTLY THROUGH THE ANGLE AND 2x6 WOOD JAMBS INTO THE STEEL JAMBS OR CONCRETE OR BLOCK WALLS. ANCHORS CAN BE (BUT ARE NOT REQUIRED TO BE) COUNTERSUNK TO PROVIDE A FLUSH MOUNTING SURFACE. CONTINUOUS ANGLE TRACK CAN BE ANCHORED DIRECTLY TO GROUT REINFORCED BLOCK WALL OR 3,000 PSI MIN. CONCRETE COLUMN OR STEEL JAMBS.

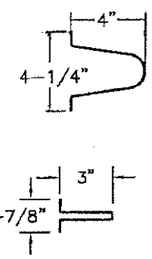

VIEW "D"
4" TALL TAPER STRUT.
0.062" MIN. GALV. STEEL,
80 KSI MIN.

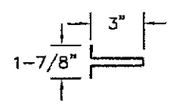

VIEW "E"
3" TALL U-BAR.
20 GA. MIN. GALV. STEEL,
80 KSI MIN.

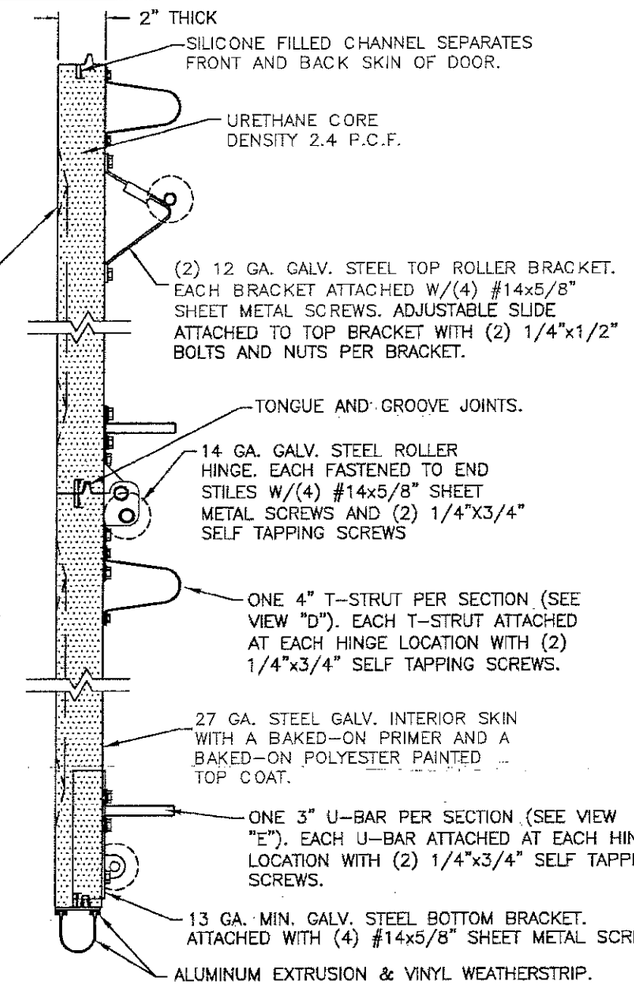

SECTION A-A (SIDE VIEW)

2x6 JAMB TO SUPPORTING STRUCTURE ATTACHMENT

(NOT TO BE USED FOR ATTACHMENT OF TRACK ANGLE TO 2x6 VERTICAL JAMBS)

BUILDING TYPE	FASTENER TYPE	MAXIMUM ON-CENTER DISTANCE BETWEEN FASTENERS*	STEEL WASHERS REQUIRED
HOLLOW CMU BLOCK WALL	1/4" x 1-1/4" MIN. EMBED ULTRACON CONCRETE ANCHOR	4 1/2"	1" O.D.
GROUT-FILLED CMU BLOCK	1/4" x 1-1/4" MIN. EMBED ULTRACON CONCRETE ANCHOR	7 1/2"	1" O.D.
2000 PSI MIN. CONCRETE	1/4" x 1-3/4" MIN. EMBED ULTRACON CONCRETE ANCHOR	15 1/4"	1" O.D.
2000 PSI MIN. CONCRETE	1/4" x 1-3/4" MIN. EMBED TAPCON CONCRETE ANCHOR	14 1/4"	1" O.D.
2000 PSI MIN. CONCRETE	3/8" X 1-3/4" MIN. EMBED WEJ-IT ANKR TITE SLEEVE ANCHOR	13 1/2"	INCLUDED
4000 PSI MIN. CONCRETE	3/8" X 1-3/4" MIN. EMBED WEJ-IT ANKR TITE SLEEVE ANCHOR	24"	INCLUDED
WOOD FRAME (SYP 0.55 SG)	1/2" x 3" LAG SCREW (ASTM A307, GRADE A) 1-5/8" EMBED INTO STRUCTURE	14 3/4"	1" O.D.
14GA STEEL (0.060" MIN.)	1/4"-14 x 1" ITW BUILDEX TEKS SELF-DRILLING FASTENER	6"	1" O.D.
12GA STEEL (0.105" MIN.)	1/4"-14 x 1" ITW BUILDEX TEKS SELF-DRILLING FASTENER	10 3/4"	1" O.D.
1/8" STEEL	1/4"-14 x 1" ITW BUILDEX TEKS SELF-DRILLING FASTENER	12 3/4"	1" O.D.

* FIRST (BOTTOM) ANCHOR STARTING AT NO MORE THAN HALF OF THE MAXIMUM ON-CENTER DISTANCE. HIGHEST ANCHOR INSTALLED AT LEAST AS HIGH AS THE DOOR OPENING.
CLOPAY DOES NOT SUPPLY JAMB ATTACHMENT FASTENERS.
MINIMUM DISTANCE BETWEEN CENTER OF ANCHOR AND EDGE OF CONCRETE: 2-1/2", EXCLUDING STUCCO THICKNESS. EXCEPTION FOR TAPCON -- MINIMUM EDGE DISTANCE FOR TAPCON FASTENER IS 1-1/4", EXCLUDING STUCCO THICKNESS.

PRODUCT REVISED
as complying with the Florida Building Code
NOA-No. 17-0809.30
Expiration Date 07/21/2021
By
Miami-Dade Product Control

MARK WESTERFIELD LICENSE NO. 48495 STATE OF FLORIDA PROFESSIONAL ENGINEER

DESIGN ENGINEER:
MARK WESTERFIELD, P.E.
FLORIDA LICENSE No. 48495

DESIGN LOADS: +46.0 PSF & −52.0 PSF

MANUFACTURING PRODUCT CODE: DSIU-1F477
PART NO.: N/A
WINDLOAD RATING: W8 DP46T

Unless Stated Otherwise TOLERANCES are
.0 = ±.031
.00 = ±.015
.000 = ±.005
.0000 = ±.001
Degrees = ±1/2°
Unless Stated Otherwise DIMENSIONS ARE IN INCHES.

Clopay Building Products Company
8585 Duke Boulevard
Mason, OH 45040 USA
Tel. No. 513-770-4800
Fax No. 513-770-4853

DESCRIPTION: MODERN STEEL 2" INTELLICORE +46/−52 PSF TO 16' W

DRAWN BY: SH	DATE: 12/2015	SCALE: NTS	DWG. SIZE B
CHECKED BY: MWW	DATE: 5/25/2016	SHEET 3 OF 4	
DWG. NO.: 105002		VER: M-D	

BRAND	MODERN STEEL		COMMERCIAL DOORS	
	FLUSH	GROOVED	FLUSH	GROOVED
CLOPAY	9208, HDPCC2	9209, HDPCR2	3728	3729
HOLMES	7208	7209	--	C7R20

SHEET: 4 OF 4

REVISIONS					
REV. NO.	ZONE:	DATE:	ECN NO.	APPVD:	DESCRIPTION
01	–	–	–	–	SEE REVISION HISTORY ON SHEET ONE.

2" TRACK CONFIGURATION.

NOTE DOUBLE TRACK HEADROOM, HI-LIFT TRACK, FOLLOW-THE- ROOF TRACK, AND VERTICAL LIFT TRACK ARE AVAILABLE OPTIONS.
TRACK CONFIGURATION ABOVE THE DOOR OPENING DOES NOT AFFECT THE WIND LOAD RATING.

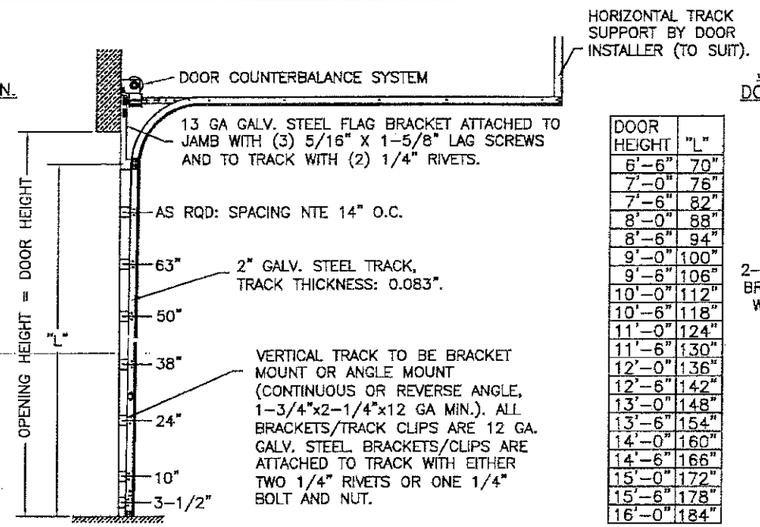

DOOR HEIGHT	"L"
6'-6"	70"
7'-0"	76"
7'-6"	82"
8'-0"	88"
8'-6"	94"
9'-0"	100"
9'-6"	106"
10'-0"	112"
10'-6"	118"
11'-0"	124"
11'-6"	130"
12'-0"	136"
12'-6"	142"
13'-0"	148"
13'-6"	154"
14'-0"	160"
14'-6"	166"
15'-0"	172"
15'-6"	178"
16'-0"	184"

JAMB CONFIGURATION DOORS UP TO 800 LBS.

BRACKET MOUNT JAMB CONFIGURATION

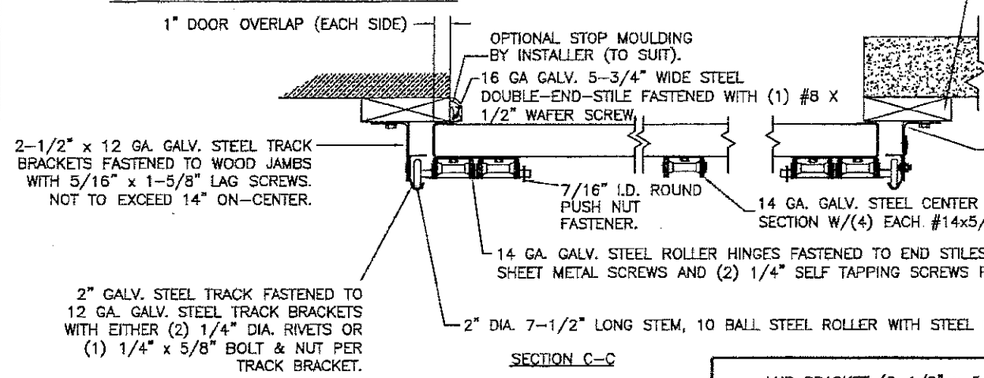

SECTION C-C

PREPARATION OF JAMBS BY OTHERS.

ANGLE MOUNT JAMB CONFIGURATION

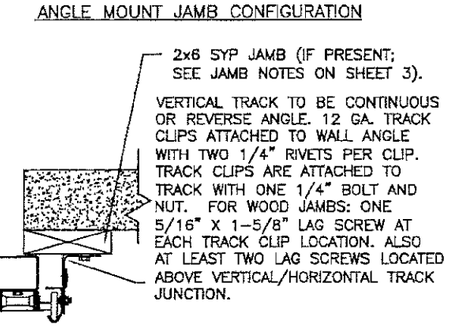

LHR BRACKET (2-1/2" x 5-3/4" x 12GA) ATTACHED WITH (2) 1/4" x 3/4" SELF TAPPING SCREWS. NOTE THAT LHR BRACKETS ARE ALSO USED WITH "DOUBLE END STILE" AS SHOWN IN ZONE B-3 SHEET 1.

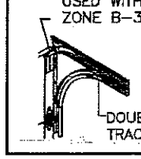

DOUBLE TRACK LOW HEADROOM OPTION (AVAIL. FOR BOTH 2" AND 3" TRACK)

3" TRACK CONFIGURATION.

NOTE DOUBLE TRACK HEADROOM, HI-LIFT TRACK, FOLLOW-THE- ROOF TRACK, AND VERTICAL LIFT TRACK ARE AVAILABLE OPTIONS.
TRACK CONFIGURATION ABOVE THE DOOR OPENING DOES NOT AFFECT THE WIND LOAD RATING.

PRODUCT REVISED
as complying with the Florida Building Code
NOA-No. 17-0809.30
Expiration Date 07/21/2021
By
Miami-Dade Product Control

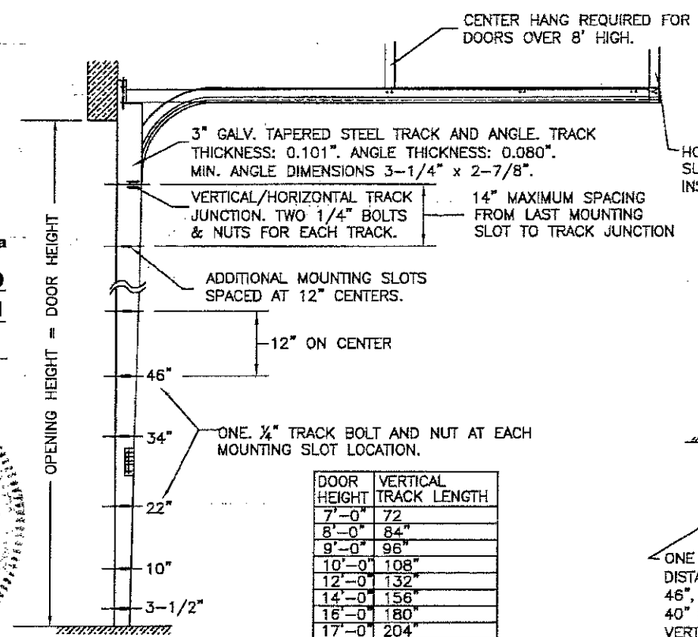

DOOR HEIGHT	VERTICAL TRACK LENGTH
7'-0"	72
8'-0"	84"
9'-0"	96"
10'-0"	108"
12'-0"	132"
14'-0"	156"
16'-0"	180"
17'-0"	204"
18'-0"	228"

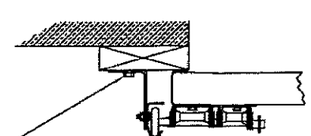

ONE 5/16" x 1-5/8" LAG SCREW SPACED AT THE SAME DISTANCES AS THE TRACK BOLTS (I.E. 3-1/2", 10", 22", 34", 46", ETC.). ADDITIONAL LAG SCREWS LOCATED AT 16", 28", & 40" FROM BOTTOM. TWO LAG SCREWS ALSO LOCATED ABOVE VERTICAL/HORIZONTAL TRACK JUNCTION.

JAMB CONFIGURATION FOR 3" TRACK.

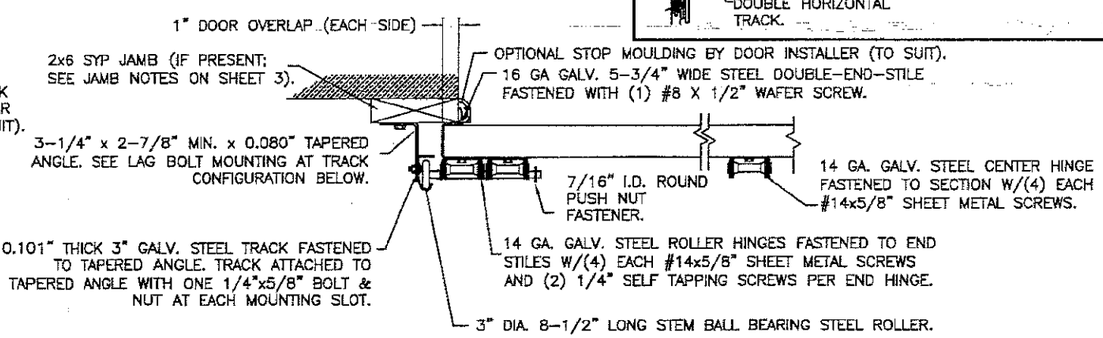

SECTION C-C

PREPARATION OF JAMBS BY OTHERS.

DESIGN LOADS: +46.0 PSF & -52.0 PSF

DESIGN ENGINEER
MARK WESTERFIELD, P.E.
FLORIDA LICENSE No. 48495

Unless Stated Otherwise TOLERANCES are .0 = ±.031, .00 = ±.015, .000 = ±.005, .0000 = ±.001, Degrees = ±1/2° Unless Stated Otherwise DIMENSIONS ARE IN INCHES.	Clopay Building Products Company — 8585 Duke Boulevard, Mason, OH 45040 USA, Tel. No. 513-770-4800, Fax No. 513-770-4853		MANUFACTURING PRODUCT CODE DSIU-1F477
			PART NO.: N/A
			WINDLOAD RATING W8 DP46T
	DESCRIPTION: MODERN STEEL 2" INTELLICORE +46/-52 PSF TO 16' W		
	DRAWN BY: SH	DATE: 12/2015	SCALE: NTS / DWG. SIZE B
	CHECKED BY: MWW	DATE: 5/25/2016	SHEET 4 OF 4
	DWG. NO.: 105002		VER: M-D