MIAMI-DADE COUNTY
PRODUCT CONTROL SECTION
11805 SW 26 Street, Room 208
Miami, Florida 33175-2474
T (786) 315-2590 F (786) 315-2599
www.miamidade.gov/economy

DEPARTMENT OF REGULATORY AND ECONOMIC RESOURCES (RER)
BOARD AND CODE ADMINISTRATION DIVISION

NOTICE OF ACCEPTANCE (NOA)

LIF Industries, Inc.
5 Harbor Park Drive,
Port Washington, NY 11050

SCOPE:

This NOA is being issued under the applicable rules and regulations governing the use of construction materials. The documentation submitted has been reviewed and accepted by Miami-Dade County RER -Product Control Section to be used in Miami Dade County and other areas where allowed by the Authority Having Jurisdiction (AHJ).

This NOA shall not be valid after the expiration date stated below. The Miami-Dade County Product Control Section (In Miami Dade County) and/or the AHJ (in areas other than Miami Dade County) reserve the right to have this product or material tested for quality assurance purposes. If this product or material fails to perform in the accepted manner, the manufacturer will incur the expense of such testing and the AHJ may immediately revoke, modify, or suspend the use of such product or material within their jurisdiction. RER reserves the right to revoke this acceptance, if it is determined by Miami-Dade County Product Control Section that this product or material fails to meet the requirements of the applicable building code.

This product is approved as described herein, and has been designed to comply with the Florida Building Code, including the High Velocity Hurricane Zone.

DESCRIPTION: Series "Models WS" Single Outswing Steel Doors -LMI

APPROVAL DOCUMENT: Drawing No.**17-218** (former **16-064**), titled "WS-CO2, WS-CO1 & WS-MO1" Outswing Commercial Steel Doors, sheets 1 through 9 of 9, dated 08/11/17, prepared by Tilteco Inc., signed and sealed by Walter A. Tillit Jr., P.E., bearing the Miami-Dade County Product Control Revision stamp with the Notice of Acceptance number and expiration date by the Miami-Dade County Product Control Section.

MISSILE IMPACT RATING: Large Missile Impact Resistant

Limitation:

1. See Design Pressure in sheet **1**. These Single doors are **not** rated for water infiltration requirements, unless protected by overhang/canopy complying w/ FBC requirements.

LABELING: Each unit shall bear a permanent label with the manufacturer's name or logo, city, state and series and following statement: "Miami-Dade County Product Control Approved", unless otherwise noted herein.

RENEWAL of this NOA shall be considered after a renewal application has been filed and there has been no change in the applicable building code negatively affecting the performance of this product.

TERMINATION of this NOA will occur after the expiration date or if there has been a revision or change in the materials, use, and/or manufacture of the product or process. Misuse of this NOA as an endorsement of any product, for sales, advertising or any other purposes shall automatically terminate this NOA. Failure to comply with any section of this NOA shall be cause for termination and removal of NOA.

ADVERTISEMENT: The NOA number preceded by the words Miami-Dade County, Florida, and followed by the expiration date may be displayed in advertising literature. If any portion of the NOA is displayed, then it shall be done in its entirety.

INSPECTION: A copy of this entire NOA shall be provided to the user by the manufacturer or its distributors and shall be available for inspection at the job site at the request of the Building Official.

This NOA **revises # 16-1018.08** consists of this page 1 and evidence pages E-1 & E-2, as well as approval document mentioned above.

The submitted documentation was reviewed by **Ishaq I. Chanda, P.E.**

MIAMI-DADE COUNTY APPROVED

11/20/17

LIF Industries, Inc.

NOTICE OF ACCEPTANCE: EVIDENCE SUBMITTED

1. Evidence submitted under previous approvals

A. DRAWINGS

1. Manufacturer's die drawings and sections (submitted under file below)
2. Drawing No. **"16-064,** titled "WS-CO2, WS-CO1 & WS-MO1" Outswing Commercial Steel Doors, sheets 1 through 9 of 9, dated 02/10/17, prepared by Tilteco Inc., signed and sealed by Walter A. Tillit Jr., P.E.

B. TESTS (submitted under file # **16-1018.08**)

1. Test reports on: 1) Air Infiltration Test, per FBC, TAS 202-94
   2) Uniform Static Air Pressure Test, Loading per FBC TAS 202-94
   3) Water Resistance Test, per FBC, TAS 202-94 (see door approval)
   4) Large Missile Impact Test per FBC, TAS 201-94
   5) Cyclic Wind Pressure Loading per FBC, TAS 203-94
   6) Forced Entry Test, per FBC 2411 3.2.1, TAS 202-94

Along with marked-up drawings and installation diagram of Single steel doors w/ cylindrical and Mortise locking hardware, prepared by National Certified Testing lab, Inc., Test Report No. **NCTL-110-19221-1**, dated 07/07/16, signed and sealed by Harold E. Rupp, P. E.
(Note: This test report has been revised by addendum letters dated 01/13/17, issued by National Certified Testing lab, signed and sealed by Harold E. Rupp, P.E.)

C. CALCULATIONS

1. Anchor Verification Calculations, complying w/ FBC-2014, dated 06-14-16, prepared by Tilteco, Inc., signed and sealed by Walter A. Tillit Jr., P. E.

D. QUALITY ASSURANCE

1. Miami Dade Department of Regulatory and Economic Resources (RER).

E. MATERIAL CERTIFICATIONS

1. Tensile Test per ASTME08-15A, test report No. **F832.01-106-18**, dated 05/31/16, issued by Intertek/Architectural Testing Laboratory, signed and sealed by Joseph A. Reed, P.E.

F. STATEMENTS

1. Statement letter of conformance to FBC 2014(5th Edition) and letter of no financial interest, dated 06/28/2016, signed and sealed by Walter A. Tillit Jr., P.E.
2. Statement letter dated DEC 01, 2016, issued by Mark, USA to authorize LIF Industry Inc., the joint test report#NCTL-110-19130-1 (LIF door system/Mark USA locks) to obtain dor system NOA approval, signed by George Marks, president.
3. Lab compliance letter, part of the test report.

G. OTHER

1. Test proposal # **15-1231R**, dated 09/18/15 approved by RER.
2. Technical Boucher of Mark USA/Alarm lock System.

Ishaq I. Chanda

Ishaq I. Chanda, P.E.
Product Control Examiner
NOA No. 17-0830.12
Expiration Date: February 23, 2022
Approval Date: November 30, 2017

LIF Industries, Inc.

NOTICE OF ACCEPTANCE: EVIDENCE SUBMITTED

2. New Evidence submitted

A. DRAWINGS

1. Manufacturer's die drawings and sections
2. Drawing No.**17-218** (former **16-064**), titled "WS-CO2, WS-CO1 & WS-MO1" Outswing Commercial Steel Doors, sheets 1 through 9 of 9, dated 08/11/17, prepared by Tilteco Inc., signed and sealed by Walter A. Tillit Jr., P.E.

Note: This revision consist of only changes to general notes#1, 4, 5, 10 and 13, in compliance of FBC 2017 edition.

A. TESTS

1. None

C. CALCULATIONS

1. None

D. QUALITY ASSURANCE

1. Miami Dade Department of Regulatory and Economic Resources (RER).

E. MATERIAL CERTIFICATIONS

1. None.

F. STATEMENTS

1. Statement letters of conformance to FBC 2017(**6th** Edition), prepared by Tilteco Inc., dated 08/11/17, signed & sealed by Walter A. Tillit Jr., P. E.
2. Statement letter of general notes revision only, in compliance with FBC 2017 edition, prepared by Tilteco Inc., dated 08/11/17, signed & sealed by Walter A. Tillit Jr., P. E.

G. OTHER

1. This NOA **revises NOA # 16-1018.08**, expiring 02/23/2022

Ishaq I. Chanda

Ishaq I. Chanda, P.E.
Product Control Examiner
NOA No. 17-0830.12
Expiration Date: February 23, 2022
Approval Date: November 30, 2017

GENERAL NOTES AND SPECIFICATIONS:

1. MODELS WS–CO2, WS–CO1 & WS–MO1 OUTSWING COMMERCIAL STEEL DOOR SHOWN ON THIS PRODUCT APPROVAL DOCUMENT (P.A.D.) HAS BEEN VERIFIED FOR CODE COMPLIANCE IN ACCORDANCE WITH THE 2017 (6th EDITION) OF THE FLORIDA BUILDING CODE. DOOR MAY BE INSTALLED AT HIGH VELOCITY HURRICANE ZONES.

DESIGN WIND LOADS SHALL BE DETERMINED AS PER SECTION 1620 OF THE ABOVE MENTIONED CODE, USING ASCE 7–10 AND SHALL NOT EXCEED THE MAXIMUM (A.S.D.) DESIGN PRESSURE RATINGS INDICATED BELOW.

IN ORDER TO VERIFY THE ABOVE CONDITION, ULTIMATE DESIGN WIND LOADS DETERMINED PER ASCE 7–10 SHALL BE FIRST REDUCED TO A.S.D. DESIGN WIND LOADS BY MULTIPLYING THEM BY 0.6 IN ORDER TO COMPARE THESE W/ MAX. (A.S.D.) DESIGN PRESSURE RATINGS SHALL BE AS INDICATED BELOW.

THIS DOOR'S ADEQUACY FOR WIND AND IMPACT LOAD HAS BEEN VERIFIED IN ACCORDANCE WITH SECTION 1626 OF THE ABOVE MENTIONED CODE AS PER PROTOCOLS TAS–201, TAS–202, TAS–203 AS PER NATIONAL CERTIFIED TESTING LAB. & AS PER INTERTEK LAB. REPORTS #NCTL–110–19221–1 & F8382.01–106–18 RESPECTIVELY, AND AS PER SUBMITTED STRUCTURAL CALCULATIONS, PERFORMED AS PER SECTION 1616 OF THE FLORIDA BUILDING CODE.

DESIGN PRESSURE RATING: +90.0, –90.0 psf. (SEE GENERAL NOTES 7 & 8)

2. ALL COMPONENTS SHALL BE AS SPECIFIED ON APPLICABLE DETAIL SHEETS AND AT BILL OF MATERIALS (SHEET 4) OF THIS DRAWING.

3. COMPLIANCE OF EGRESS / ESCAPE REQUIREMENTS OF THESE DOORS PER FLORIDA BUILDING CODE TO BE DETERMINED BY BUILDING OFFICIALS ON A CASE–BY–CASE BASIS.

4. ALL SCREWS USED FOR ASSEMBLY CONNECTIONS (METAL TO METAL) TO BE STAINLESS STEEL 304 OR 316 AISI SERIES OR CORROSION RESISTANT COATED CARBON STEEL AS PER DIN 50018 WITH 50 ksi YIELD POINT AND 90 ksi TENSILE STRENGTH & SHALL COMPLY W/ FLORIDA BUILDING CODE SECTION 2411.3.3.4.

5. ALL WELDING TO CONFORM W/AMERICAN WELDING SOCIETY A.W.S. D.1.3 AND D–19.0 REGULATIONS WITH E60XX ELECTRODES, FOR GALVANNEAL MATERIAL.

6. ALL ANCHORS FOR DOOR FRAME CONNECTIONS TO EXISTING STRUCTURE SHALL BE AS SPECIFIED ON SHEET 7 OF THIS DRAWING.
MAXIMUM ANCHORS SPACING SHALL BE AS PER ELEVATIONS ON SHEET 2 OF THIS DRAWING.

7. THESE DOORS WILL NOT REQUIRE A HURRICANE PROTECTION DEVICE.

8. THESE DOORS WAS TESTED FOR AIR INFILTRATION, BUT NOT FOR WATER INFILTRATION, THEREFORE DESIGN PRESSURE RATING INDICATED ON GENERAL NOTE 1 IS APPROVED FOR WHERE WATER INFILTRATION REQUIREMENT IS NO NEEDED. WHERE WATER INFILTRATION IS NEEDED, DESIGN PRESSURE RATING INDICATED ON GENERAL NOTE 1 IS APPROVED ONLY WHEN CANOPY IS PROVIDED IMMEDIATELY ABOVE THE DOOR LOCATION COVERING THE ENTIRE WIDTH OF DOOR AND PROJECTING OUT A DISTANCE EQUAL OR LARGER THAN THE DOORS HEIGHT. NOT APPROVED IF THE ABOVE CONDITION IS NOT COMPLIED WITH.

9. PROVIDE SPECIFIED SEALANT AT ALL DOOR FRAME & THRESHOLD COMPONENTS INDICATED ON THIS DRAWING.

10. WOOD BUCKS BY OTHERS, MUST BE ANCHORED PROPERTY TO TRANSFER LOADS TO THE BUILDING STRUCTURE AND, MUST BE SOUTHERN PINE W/ G=0.55, AND SHALL COMPLY W/ SECTIONS 2411.3.3.3; 2326 OF THE FLORIDA BUILDING CODE.

11. PERMIT HOLDER SHALL VERIFY THE ADEQUACY OF THE EXISTING STRUCTURE TO SUSTAIN THE SUPERIMPOSED LOADS TRANSFERRED BY THESE DOORS.

12. (a) THIS PRODUCT APPROVAL DOCUMENT (P.A.D.) PREPARED BY THIS ENGINEER IS GENERIC AND DOES NOT PROVIDE INFORMATION FOR A SITE SPECIFIC PROJECT; i.e. WHERE THE SITE CONDITIONS DEVIATE FROM THE P.A.D.

(b) CONTRACTOR TO BE RESPONSIBLE FOR THE SELECTION, PURCHASE AND INSTALLATION INCLUDING LIFE SAFETY OF THIS PRODUCT, BASED ON THIS P.A.D., PROVIDED HE/SHE DOES NOT DEVIATE FROM THE CONDITIONS DETAILED ON THIS DOCUMENT. CONSTRUCTION SAFETY AT SITE IS THE CONTRACTOR'S RESPONSIBILITY.

(c) THIS PRODUCT APPROVAL DOCUMENT (P.A.D.) WILL BE CONSIDERED INVALID IF ALTERED BY ANY MEANS.

(d) ORIGINAL P.A.D SHALL BEAR THE DATE, SEAL AND SIGNATURE OF THE PROFESSIONAL ENGINEER OF RECORD THAT PREPARED IT.

13. PRODUCT MANUFACTURER'S LABEL SHALL BE LOCATED ON A READILY VISIBLE LOCATION AT PRODUCT IN ACCORDANCE WITH SECTION 1709.5 OF THE FLORIDA BUILDING CODE.
ONE LABEL SHALL BE PLACED FOR EVERY OPENING.

THIS DRAWING SHALL ONLY BE USED TO OBTAIN PERMITS IN THE STATE OF FLORIDA

PRODUCT REVISED
as complying with the Florida
Building Code
Acceptance No 17-0830.12
Expiration Date Feb 23, 2022
By [illegible]
Miami-Dade Product Control

WALTER A. TILLIT JR.
LICENSE
No. 44167
STATE OF FLORIDA
PROFESSIONAL ENGINEER

P.E. SEAL/SIGNATURE/DATE

FLORIDA BUILDING CODE (HIGH VELOCITY HURRICANE ZONE)

TILTECO INC.
TILLIT TESTING & ENGINEERING COMPANY
6355 N.W. 36th. St., Ste. 305, VIRGINIA GARDENS, Fl. 33166
Phone : (305)871–1530 . Fax : (305)871–1531
EB–0006719
WALTER A. TILLIT Jr. P.E.
FLORIDA Lic. # 44167

MODELS WS–CO2, WS–CO1 & WS–MO1
OUTSWING COMMERCIAL STEEL DOORS

L.I.F. INDUSTRIES, INC.
5 HARBOR PARK DRIVE
PORT WASHINGTON, NY 11050

REV. NO	DESCRIPTION	DATE	REV. No	DESCRIPTION	DATE
1	OLD 16–084	08/11/17	3		
2			4		

L.C.
DRAWN BY:

08/11/17
DATE:

17–218
DRAWING No.

SHEET 1 OF 9

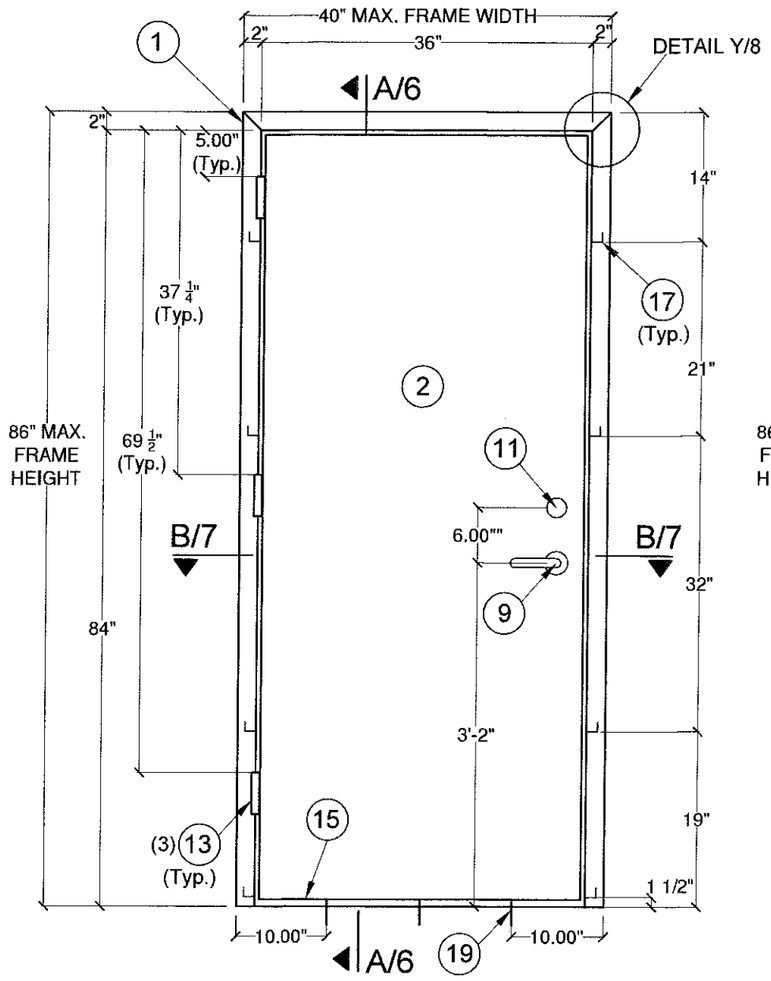

Model WS-C02:

(9) Lock -MARKS-USA175 Series Cylindrical Lock with (11) 130 Series Deadbolt

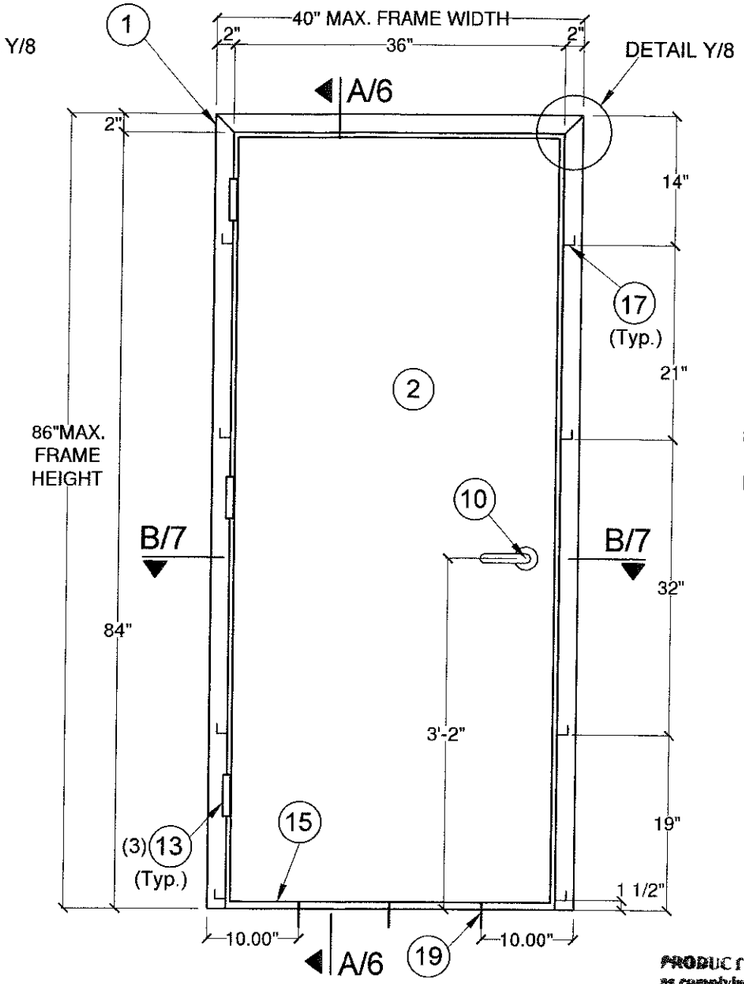

Model Set WS-C01:

(10) Lock - MARKS USA 195 Series Cylindrical Lockset

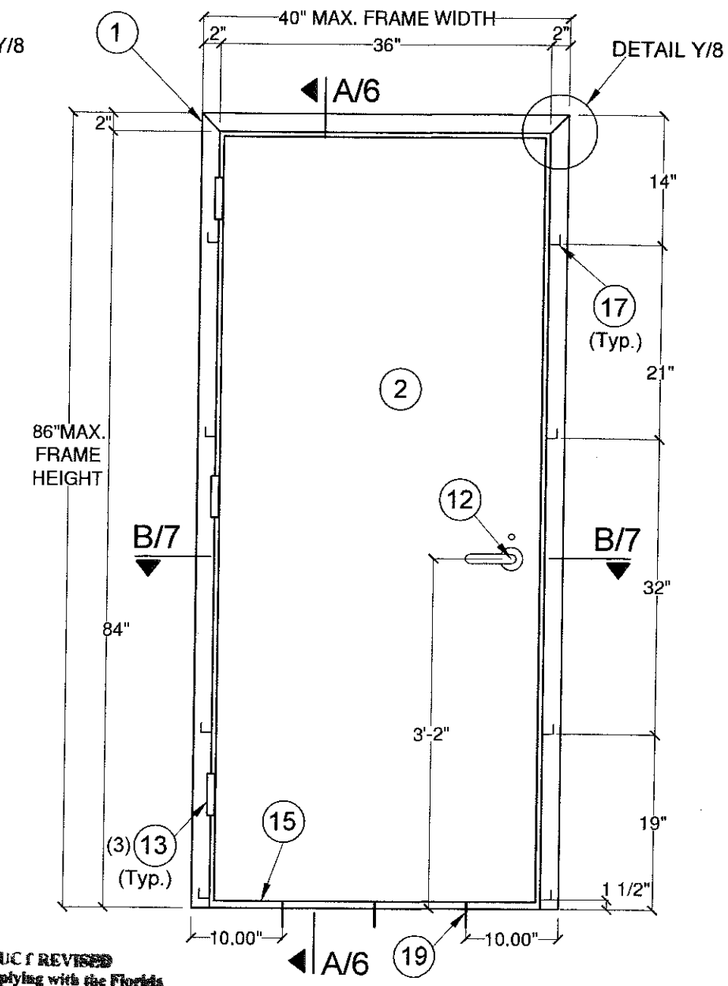

Model WS-M01:

(12) Lock - MARKS USA 5 Series Mortise Lockset with Deadbolt

PRODUCT REVISED
as complying with the Florida
Building Code
Acceptance No 17-0830.12
Expiration Date 2/23/22
By Sherry L. Chandler
Miami-Dade Product Control

A.S.D. DESIGN LOAD +90.0, -90.0 psf

TYPICAL EXTERIOR ELEVATIONS

Scale: 1/4" = 1'-0"

WALTER A. TILLIT JR.
LICENSE
No. 44167
STATE OF FLORIDA
PROFESSIONAL ENGINEER

P.E. SEAL/SIGNATURE/DATE

FLORIDA BUILDING CODE (HIGH VELOCITY HURRICANE ZONE)

TILTECO INC.
TILLIT TESTING & ENGINEERING COMPANY
6355 N.W. 36th. St., Ste. 305, VIRGINIA GARDENS, FL 33166
Phone : (305)871-1530 . Fax : (305)871-1531
EB-0006719
WALTER A. TILLIT Jr. P.E.
FLORIDA Lic. # 44167

MODELS WS-C02, WS-C01 & WS-M01
OUTSWING COMMERCIAL STEEL DOORS

L.I.F. INDUSTRIES, INC.
5 HARBOR PARK DRIVE
PORT WASHINGTON, NY 11050

REV. NO	DESCRIPTION	DATE	REV. No	DESCRIPTION	DATE
1	OLD 16-084	08/11/17	3		
2			4		

L.C.
DRAWN BY:

08/11/17
DATE:

17-218
DRAWING No.

SHEET 2 OF 9

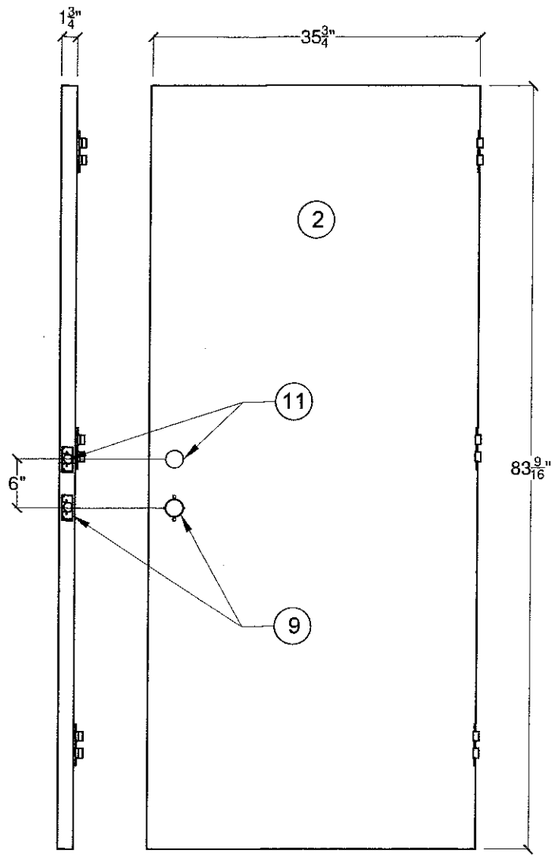

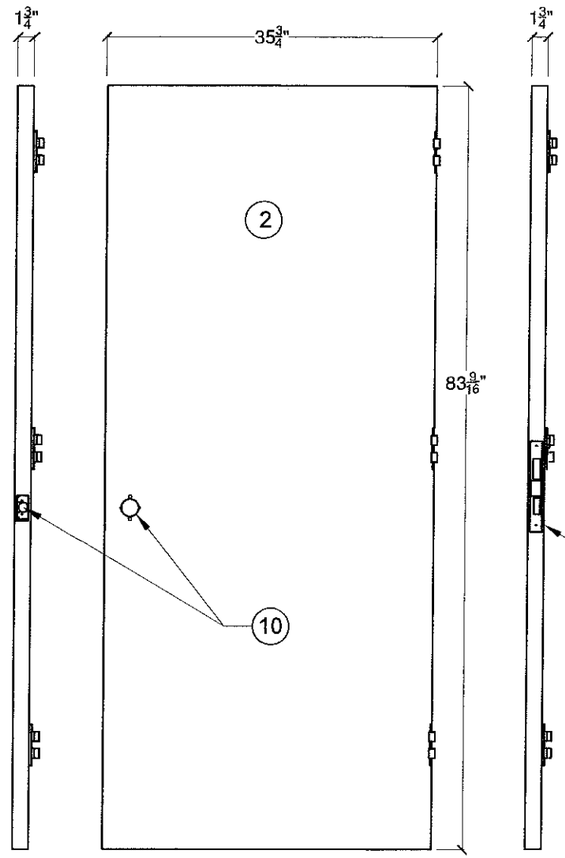

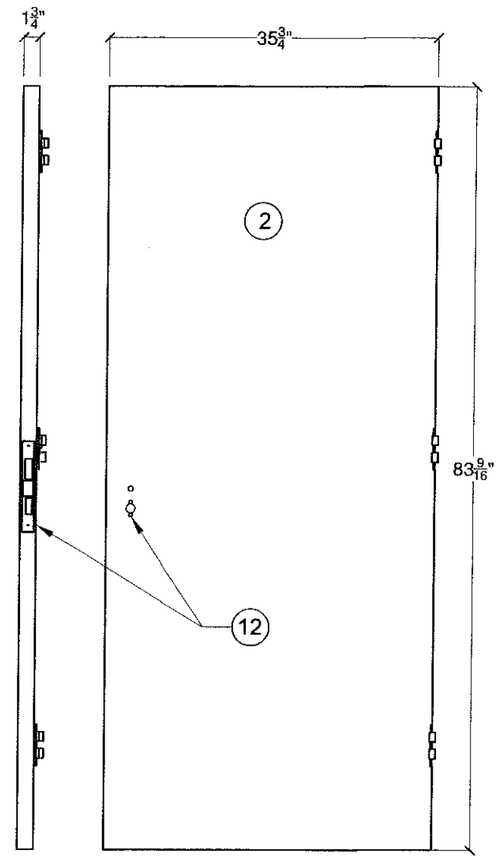

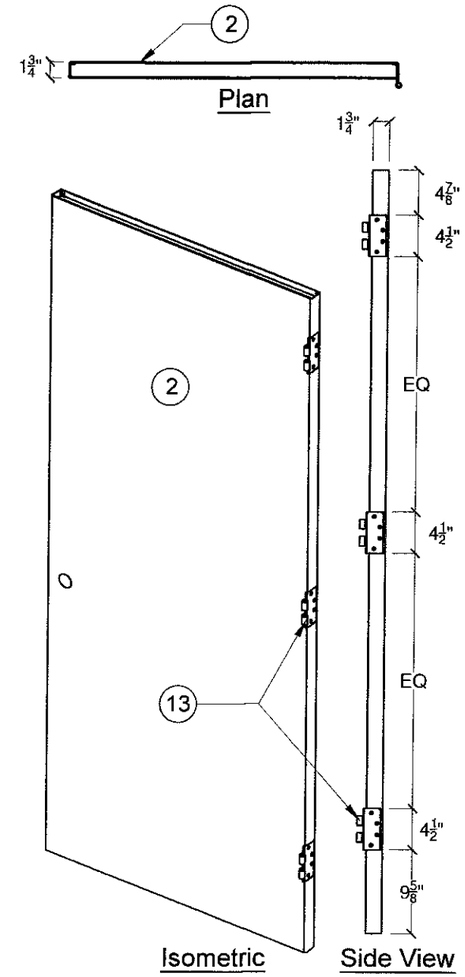

Model WS-C02:

(9) Lock -MARKS-USA175 Series Cylindrical Lock with (11) 130 Series Deadbolt

Model Set WS-C01:

(10) Lock - MARKS USA 195 Series Cylindrical Lockset

Model WS-M01:

(12) Lock - MARKS USA 5 Series Mortise Lockset with Deadbolt

PRODUCT REVISED
as complying with the Florida
Building Code
Acceptance No 17-0830.12
Expiration Date 2/22/22
By Ishaq I. Khan
Miami Dade Product Control

HARDWARE INSTALLATION DETAILS AT DOOR PANEL

WALTER A. TILLIT JR.
LICENSE
No. 44167
STATE OF FLORIDA
PROFESSIONAL ENGINEER

P.E. SEAL/SIGNATURE/DATE

FLORIDA BUILDING CODE (HIGH VELOCITY HURRICANE ZONE)

TILTECO INC.
TILLIT TESTING & ENGINEERING COMPANY
6355 N.W. 36th. St., Ste. 305, VIRGINIA GARDENS, Fl. 33166
Phone : (305)871-1530 . Fax : (305)871-1531
EB-0006719
WALTER A. TILLIT Jr. P.E.
FLORIDA Lic. # 44167

MODELS WS-C02, WS-C01 & WS-M01
OUTSWING COMMERCIAL STEEL DOORS

L.I.F. INDUSTRIES, INC.
5 HARBOR PARK DRIVE
PORT WASHINGTON, NY 11050

REV. NO	DESCRIPTION	DATE	REV. No	DESCRIPTION	DATE
1	OLD 16-064	08/11/17	3		
2			4		

L.C.
DRAWN BY:

08/11/17
DATE:

17-218
DRAWING No.

SHEET 3 OF 9

BILL OF MATERIALS

ITEM	DESCRIPTION	MATERIAL	REMARKS
1	HM Welded Frame	16Ga (0.057") A-40 Steel, Fu= 55.2Ksi, Fy= 49.2Ksi	5 3/4" Minimum Jamb Depth x 2" Face
2	HM Door,Lockseam,Honeycomb,Flush	18Ga (0.048") A-40 Steel @ Skin	1 3/4" Thick. w/ Paper Honeycomb Core
3	Top and Bottom Channel	16Ga (0.057") A-40 Steel	Spot welded to Door skins @ 4" o.c.
4	Strike Box for 4 7/8"Strike (Frame) w/ Lock Face Plate	16Ga (0.057") A-40 Steel	Spot welded to Strike Jamb; & w/ (2) #12-24 MS
5	Tab for Deadlock Strike Reinf. (Frame)	11Ga (0.119") Steel	Zinc plated w/ (4) #8-32 Screws
6	Strike Box for 2 3/4" Strike (Frame) w/ Lock Face Plate	16Ga (0.057") A-40 Steel	Spot welded to Strike Jamb; & w/ (2) #8-32 MS
7	Lock Box for Cyl./DL Reinforcments (Door)	16Ga (0.057") A-40 Steel	Spot welded to Lock edge of Door; & w/ (2) #8-32 MS
8	Lock Box for Mortise Lock (Door)	14Ga (0.075") A-40 Steel	Spot welded to Lock edge of Door; & w/#12-24 MS
9	Marks USA series 175 Cyl.Lockset,Grade 2	N/A	
10	Marks USA series 195 Cyl.Lockset,Grade 1	N/A	
11	Marks USA series 130 Deadbolt,Grade 1	N/A	
12	Marks USA series 5 Mortise Lock w/ Deadbolt,Grade 1	N/A	
13	Hinges 4.5" x 4.5" Std x 1/2"	Steel (0.134")	Finish may vary, w/ (8)#12-24 x 1/2"MS (3 per jamb). See Sht. 9
14	Hinge Reinforcments	7Ga (0.179") Steel	Zinc plated, 3 each per Door and Frame
15	Threshold National Guard Products #950 NA	6063-T6 Aluminum Alloy	0.078" Thk. w/ neoprene bulb
16	Weatherstrip National Guard Products #120 NA	Aluminum / Neoprene	Secured with (2) #6 x 3/4" SMS screws @ 4" o.c.
17	Z-Clip Anchors	16Ga (0.057") A-40 Steel	4 per Jamb
18	Caulking: GE Silicone II	Silicone	Exterior Frame Sealant
19	Threshold Anchor	Case Hardened Steel	1/4"Ø Ultracon by Elco Construction Products , 1 3/4" Min. Emb. & 3" Min. E.D @ f'c=3ksi Concrete Sill

PRODUCT REVISED
as complying with the Florida
Building Code
Acceptance No 17-0830.12
Expiration Date 2/23/22
By Ishwar L. Chand
Miami-Dade Product Control

WALTER A. TILLIT JR.
LICENSE
No. 44167
STATE OF FLORIDA
PROFESSIONAL ENGINEER

P.E. SEAL/SIGNATURE/DATE

FLORIDA BUILDING CODE (HIGH VELOCITY HURRICANE ZONE)

TILTECO INC.
TILLIT TESTING & ENGINEERING COMPANY
6355 N.W. 36th. St, Ste. 305, VIRGINIA GARDENS, FL 33166
Phone : (305)871-1530 . Fax : (305)871-1531
EB-0006719
WALTER A. TILLIT Jr. P.E.
FLORIDA Lic. # 44167

MODELS WS-C02, WS-C01 & WS-M01
OUTSWING COMMERCIAL STEEL DOORS

L.I.F. INDUSTRIES, INC.
5 HARBOR PARK DRIVE
PORT WASHINGTON, NY 11050

REV. NO	DESCRIPTION	DATE	REV. No	DESCRIPTION	DATE
1	OLD 16-084	08/11/17	3		
2			4		

L.C.
DRAWN BY:

08/11/17
DATE:

17-218
DRAWING No.

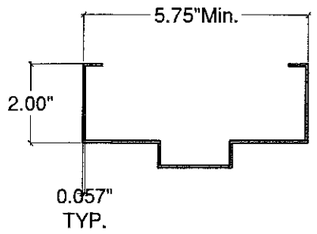

① **HM Frame Welded**
(16 Gage)

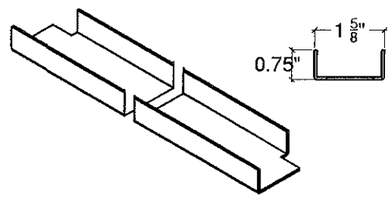

③ **Top and Bottom Channel**
(16 Gage)

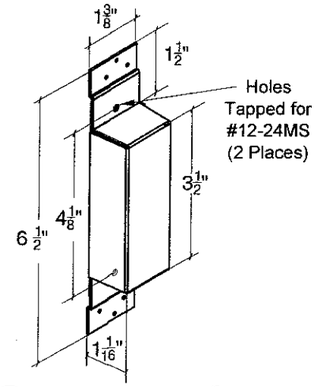

④ **Strike Box for 4 7/8" Strike w/ Lock Face Plate**
(16 Gage)

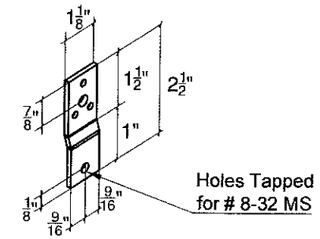

⑤ **Tabs for Deadlock**
(11 Gage)

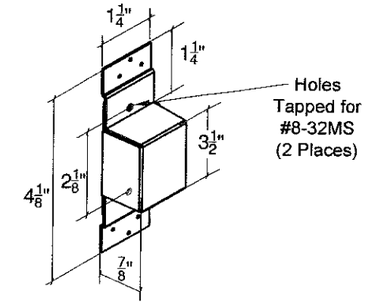

⑥ **Strike Box for 2 3/4" Strike w/ Lock Face Plate**
(16 Gage)

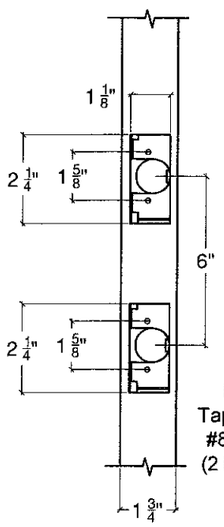

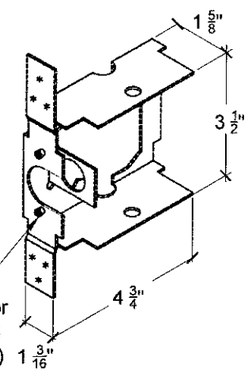

⑦ **Lock Box**
For Cylindrical Lock and Deadlock

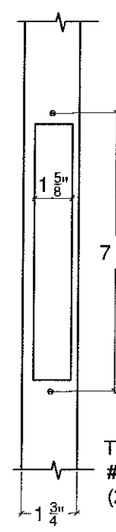

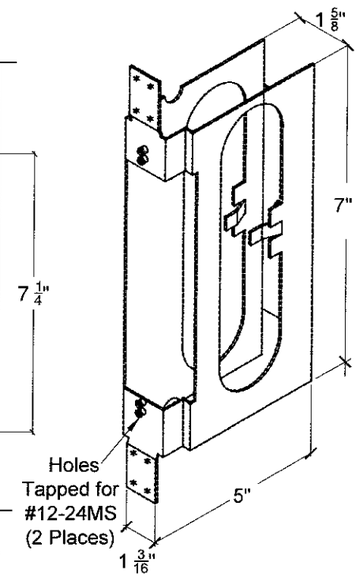

⑧ **Lock Box**
For Mortise Lock

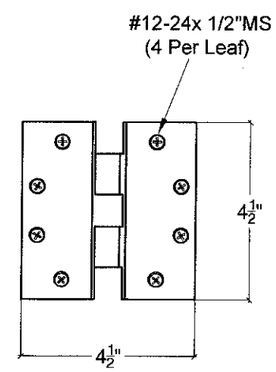

⑬ **Hinge**
0.134" thick

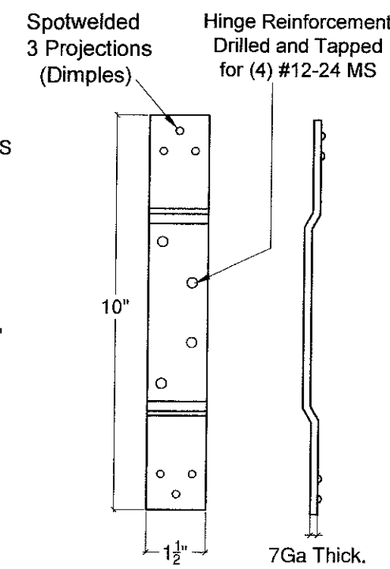

⑭ **Hinge Reinforcement**

PRODUCT REVISED
as complying with the Florida
Building Code
Acceptance No 17-0830.12
Expiration Date 2/23/22
By [signature]
Official State Product Control

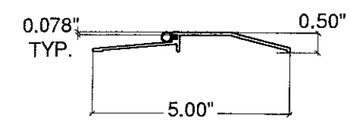

⑮ **Threshold #950 NA w/ Neoprene Bulb**

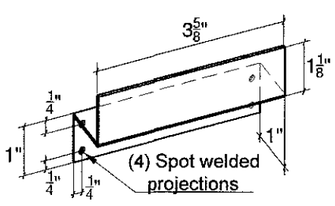

Isometric

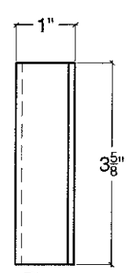

Plan

⑰ **Z-Clip Anchor**
(Min. 16Ga A-40 Steel)

COMPONENTS

WALTER A. TILLIT JR.
LICENSE
No. 44167
STATE OF
FLORIDA
PROFESSIONAL ENGINEER

P.E. SEAL/SIGNATURE/DATE

FLORIDA BUILDING CODE (HIGH VELOCITY HURRICANE ZONE)

TILTECO INC.
TILLIT TESTING & ENGINEERING COMPANY
6355 N.W. 36th. St., Ste. 305, VIRGINIA GARDENS, Fl. 33166
Phone : (305)871-1530 . Fax : (305)871-1531
EB-0006719
WALTER A. TILLIT Jr. P.E.
FLORIDA Lic. # 44167

MODELS WS-C02, WS-C01 & WS-M01
OUTSWING COMMERCIAL STEEL DOORS

L.I.F. INDUSTRIES, INC.
5 HARBOR PARK DRIVE
PORT WASHINGTON, NY 11050

REV. NO	DESCRIPTION	DATE	REV. No	DESCRIPTION	DATE
1	OLD 16-064	08/11/17	3		
2			4		

L.C.
DRAWN BY:

08/11/17
DATE:

17-218
DRAWING No.

SHEET 5 OF 9

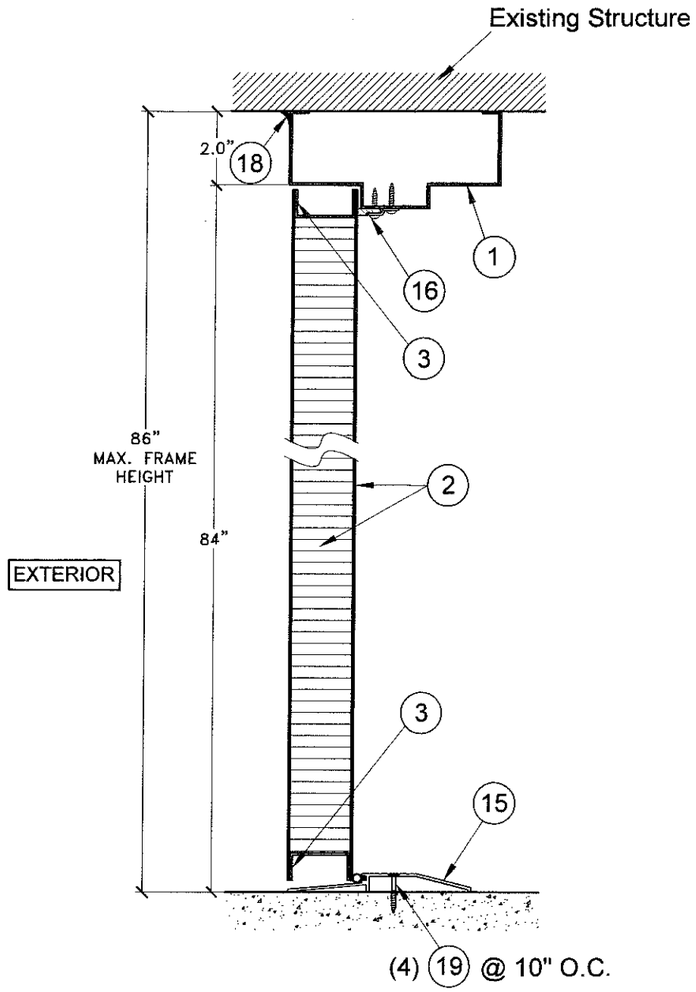

Section A-A

Scale 3/4"= 1'-0"

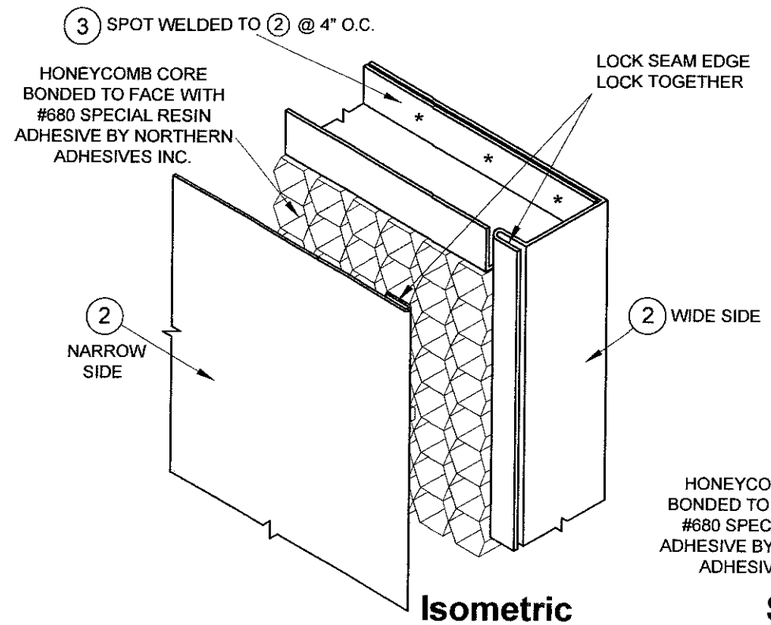

Isometric

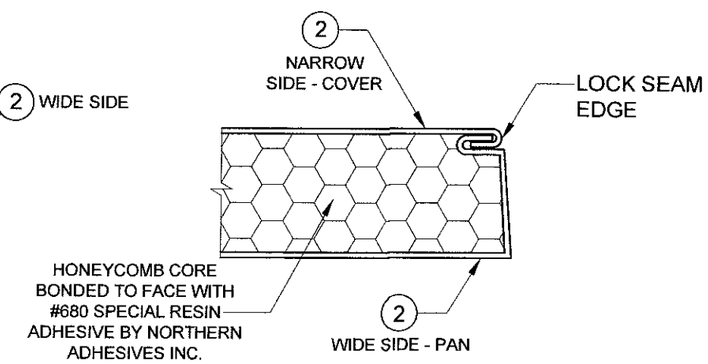

Section through Edge Seam

DOOR PANEL DETAIL

Scale 6"= 1'-0"

PRODUCT REVISED
as complying with the Florida
Building Code
Acceptance No 17-0830.12
Expiration Date 2/23/22
By [signature]
Product Control

WALTER A. TILLIT JR.
LICENSE
No. 44167
STATE OF FLORIDA
PROFESSIONAL ENGINEER

P.E. SEAL/SIGNATURE/DATE

FLORIDA BUILDING CODE (HIGH VELOCITY HURRICANE ZONE)

TILTECO INC.
TILLIT TESTING & ENGINEERING COMPANY
6355 N.W. 36th. St., Ste. 305, VIRGINIA GARDENS, Fl. 33166
Phone : (305)871-1530 . Fax : (305)871-1531
EB-0006719
WALTER A. TILLIT Jr. P.E.
FLORIDA Lic. # 44167

MODELS WS-C02, WS-C01 & WS-M01
OUTSWING COMMERCIAL STEEL DOORS

L.I.F. INDUSTRIES, INC.
5 HARBOR PARK DRIVE
PORT WASHINGTON, NY 11050

REV. NO	DESCRIPTION	DATE	REV. No	DESCRIPTION	DATE
1	OLD 16-064	08/11/17	3		
2			4		

L.C.
DRAWN BY:

08/11/17
DATE:

17-218
DRAWING No.

SHEET 6 OF 9

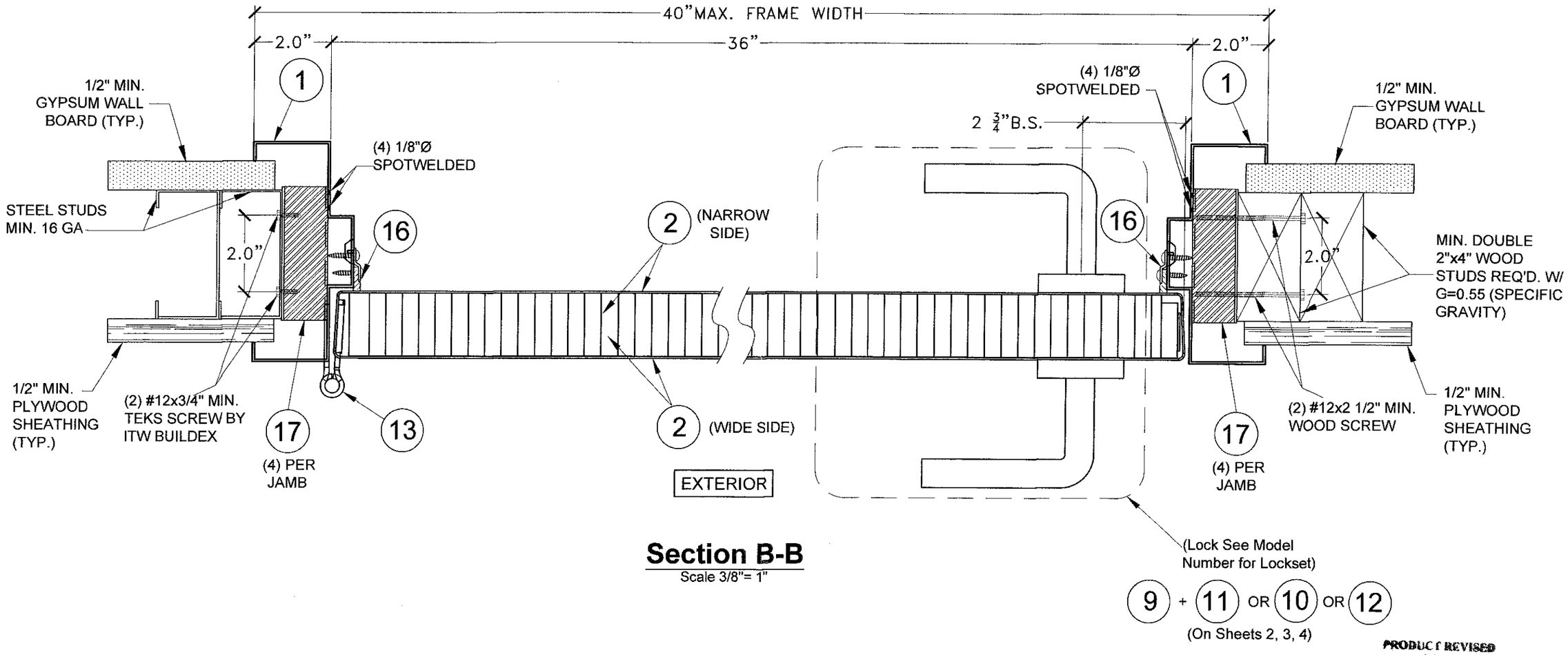

Section B-B

Scale 3/8"= 1"

PRODUCT REVISED
as complying with the Florida Building Code
Acceptance No 17-0830.12
Expiration Date 2/23/22
Product Control

WALTER A. TILLIT JR. LICENSE No. 44167 STATE OF FLORIDA PROFESSIONAL ENGINEER

P.E. SEAL/SIGNATURE/DATE

FLORIDA BUILDING CODE (HIGH VELOCITY HURRICANE ZONE)

TILTECO INC.
TILLIT TESTING & ENGINEERING COMPANY
6355 N.W. 36th. St., Ste. 305, VIRGINIA GARDENS, Fl. 33166
Phone : (305)871-1530 . Fax : (305)871-1531
EB-0006719
WALTER A. TILLIT Jr. P.E.
FLORIDA Lic. # 44167

MODELS WS-C02, WS-C01 & WS-M01
OUTSWING COMMERCIAL STEEL DOORS

L.I.F. INDUSTRIES, INC.
5 HARBOR PARK DRIVE
PORT WASHINGTON, NY 11050

REV. NO	DESCRIPTION	DATE	REV. No	DESCRIPTION	DATE
1	OLD 16-064	08/11/17	3		
2			4		

L.C.
DRAWN BY:
08/11/17
DATE:
17-218
DRAWING No.
SHEET 7 OF 9

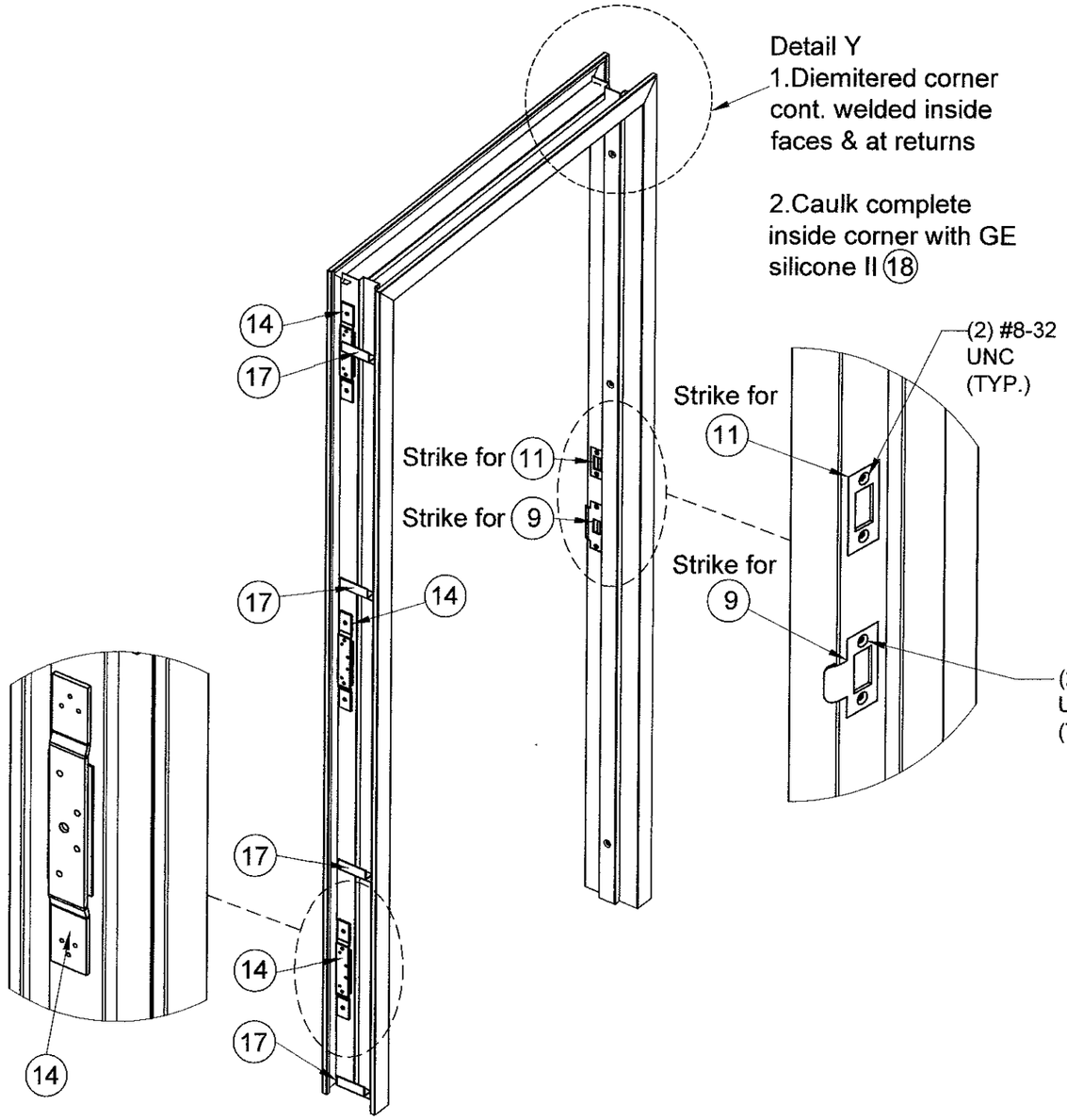

Typical Hinges Reinforcement Detail For Frames "WS-C01","WS-C02","WS-M01" w/ Anchor 17

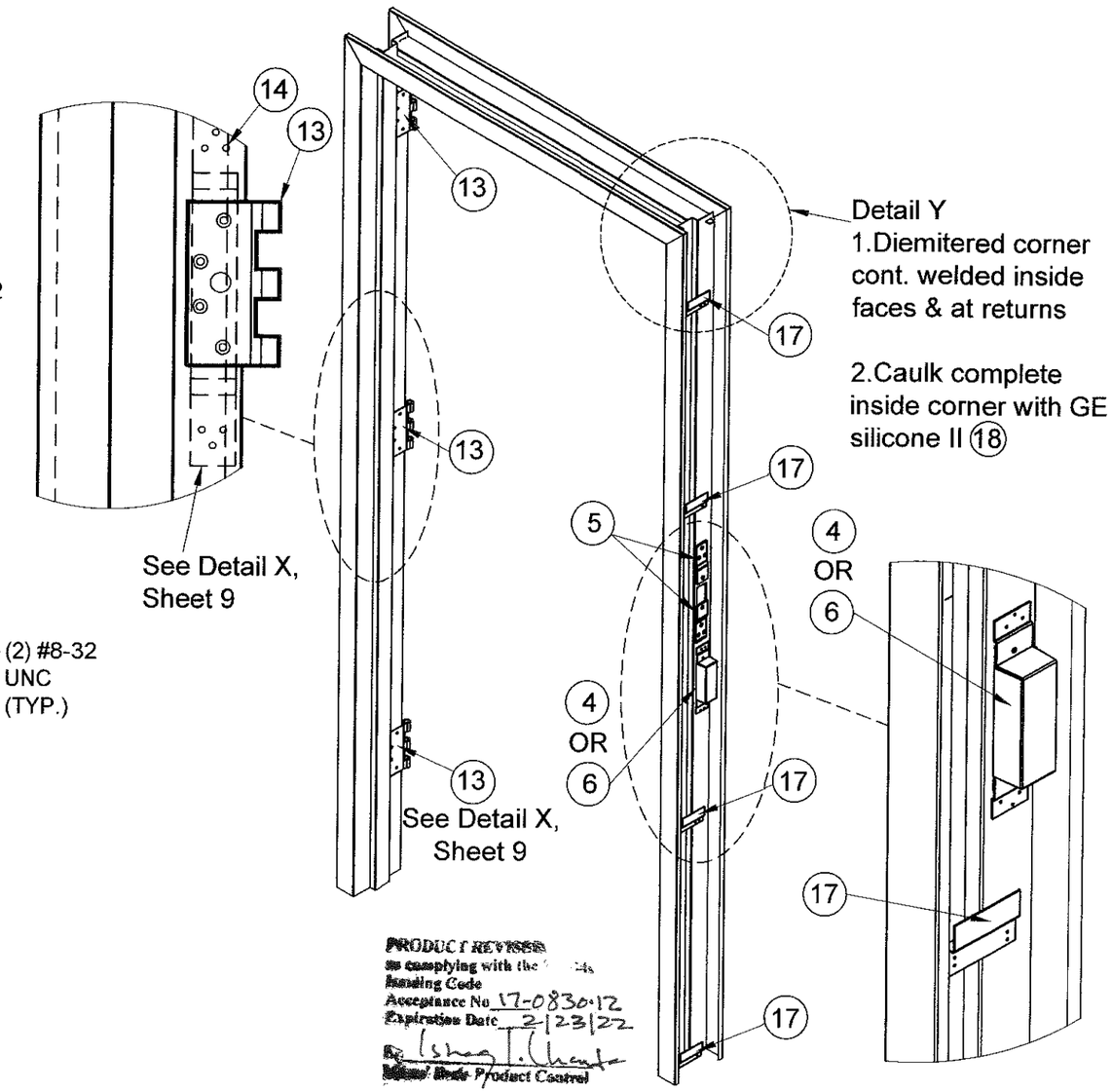

PRODUCT REVISED
as complying with the
Building Code
Acceptance No 17-0830.12
Expiration Date 2/23/22
Product Control

Typical Strike Box Detail For Frames "WS-C01","WS-C02","WS-M01"w/ Anchor 17

WALTER A. TILLIT JR. LICENSE No. 44167 STATE OF FLORIDA PROFESSIONAL ENGINEER

P.E. SEAL/SIGNATURE/DATE

FLORIDA BUILDING CODE (HIGH VELOCITY HURRICANE ZONE)

TILTECO INC.
TILLIT TESTING & ENGINEERING COMPANY
6355 N.W. 36th. St., Ste. 305, VIRGINIA GARDENS, Fl. 33166
Phone : (305)871-1530 . Fax : (305)871-1531
EB-0006719
WALTER A. TILLIT Jr. P.E.
FLORIDA Lic. # 44167

MODELS WS-C02, WS-C01 & WS-M01 OUTSWING COMMERCIAL STEEL DOORS

L.I.F. INDUSTRIES, INC.
5 HARBOR PARK DRIVE
PORT WASHINGTON, NY 11050

REV. NO	DESCRIPTION	DATE	REV. No	DESCRIPTION	DATE
1	OLD 16-064	08/11/17	3		
2			4		

L.C.
DRAWN BY:

08/11/17
DATE:

17-218
DRAWING No.

SHEET 8 OF 9

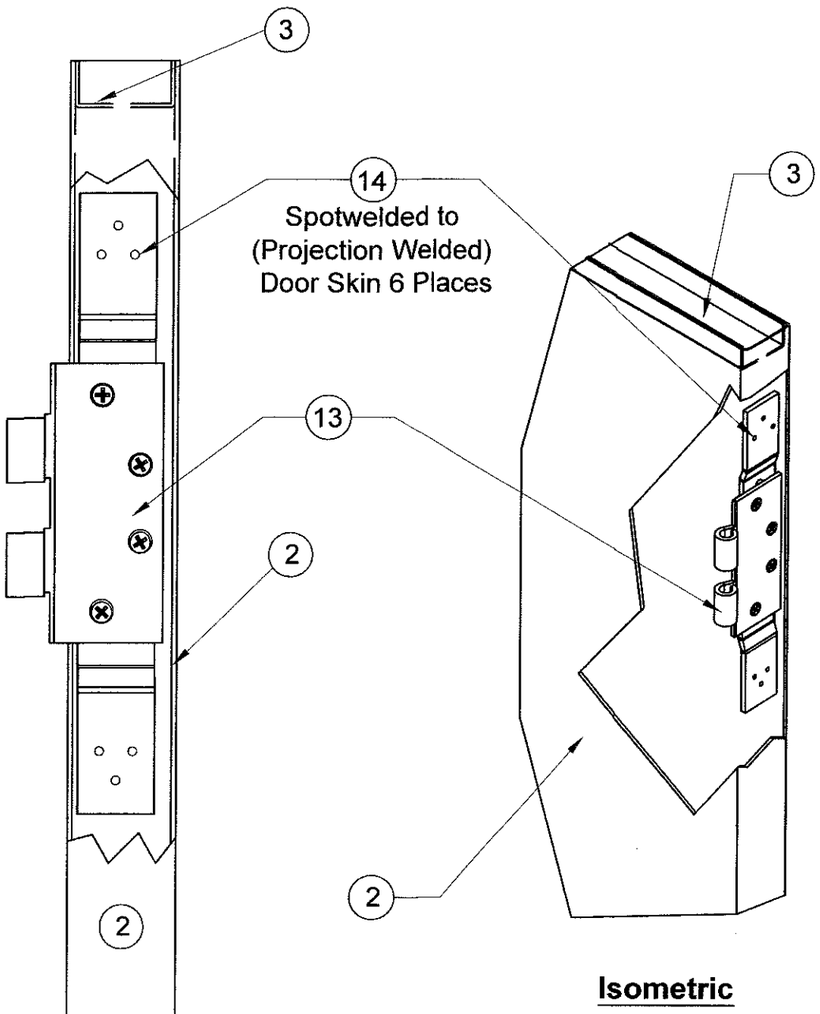

Typical Hinge Reinforcement Detail X For Doors
"WS-C01","WS-C02","WS-M01"

PRODUCT REVISED
as complying with the Florida
Building Code
Acceptance No 17-0830.12
Expiration Date FEB 23, 2022
Ishaq I. Chanda
State Product Control

WALTER A. TILLIT JR.
LICENSE
No. 44167
STATE OF FLORIDA
PROFESSIONAL ENGINEER

P.E. SEAL/SIGNATURE/DATE

FLORIDA BUILDING CODE (HIGH VELOCITY HURRICANE ZONE)

TILTECO INC.
TILLIT TESTING & ENGINEERING COMPANY
6355 N.W. 36th. St., Ste. 305, VIRGINIA GARDENS, Fl. 33166
Phone : (305)871-1530 . Fax : (305)871-1531
EB-0006719
WALTER A. TILLIT Jr. P.E.
FLORIDA Lic. # 44167

MODELS WS-C02, WS-C01 & WS-M01
OUTSWING COMMERCIAL STEEL DOORS

L.I.F. INDUSTRIES, INC.
5 HARBOR PARK DRIVE
PORT WASHINGTON, NY 11050

REV. NO	DESCRIPTION	DATE	REV. No	DESCRIPTION	DATE
1	OLD 16-064	08/11/17	3		
2			4		

L.C.
DRAWN BY:

08/11/17
DATE:

17-218
DRAWING No.

SHEET 9 OF 9