MIAMI-DADE COUNTY
PRODUCT CONTROL SECTION
11805 SW 26 Street, Room 208
Miami, Florida 33175-2474
T (786) 315-2590 F (786) 315-2599
www.miamidade.gov/economy

DEPARTMENT OF REGULATORY AND ECONOMIC RESOURCES (RER)
BOARD AND CODE ADMINISTRATION DIVISION

NOTICE OF ACCEPTANCE (NOA)

JB Garage Door, Inc.
12195 NW 98th Avenue
Hialeah Gardens, FL 33018

SCOPE:

This NOA is being issued under the applicable rules and regulations governing the use of construction materials. The documentation submitted has been reviewed and accepted by Miami-Dade County RER-Product Control Section to be used in Miami Dade County and other areas where allowed by the Authority Having Jurisdiction (AHJ).

This NOA shall not be valid after the expiration date stated below. The Miami-Dade County Product Control Section (In Miami Dade County) and/or the AHJ (in areas other than Miami Dade County) reserve the right to have this product or material tested for quality assurance purposes. If this product or material fails to perform in the accepted manner, the manufacturer will incur the expense of such testing and the AHJ may immediately revoke, modify, or suspend the use of such product or material within their jurisdiction. RER reserves the right to revoke this acceptance, if it is determined by Miami-Dade County Product Control Section that this product or material fails to meet the requirements of the applicable building code.

This product is approved as described herein, and has been designed to comply with the Florida Building Code, including the High Velocity Hurricane Zone.

DESCRIPTION: Models 724/720 Steel Sectional Garage Door up to 18'-2" Wide x 22' High

APPROVAL DOCUMENT: Drawing No. **99-03 Rev H**, titled "Steel Overhead Garage Door", sheets 1 through 5 of 5, dated 02/01/1999 and last revised on OCT 09, 2017, prepared by Al-Farooq Corporation, signed and sealed by Javad Ahmad, P.E., bearing the Miami-Dade County Product Control Revision stamp with the Notice of Acceptance number and expiration date by the Miami-Dade County Product Control Section.

MISSILE IMPACT RATING: Large and Small Missile Impact Resistant

LABELING: A permanent label with the manufacturer's name or logo, manufacturing address, model number, the positive and negative design pressure rating, indicate impact rated if applicable, installation instruction drawing reference number, approval number (NOA), the applicable test standards, and the statement reading 'Miami-Dade County Product Control Approved' is to be located on the door's side track, bottom angle, or inner surface of a panel.

LIMITATION: This door has not been tested for air infiltration.

RENEWAL of this NOA shall be considered after a renewal application has been filed and there has been no change in the applicable building code negatively affecting the performance of this product.

TERMINATION of this NOA will occur after the expiration date or if there has been a revision or change in the materials, use, and/or manufacture of the product or process. Misuse of this NOA as an endorsement of any product, for sales, advertising or any other purposes shall automatically terminate this NOA. Failure to comply with any section of this NOA shall be cause for termination and removal of NOA.

ADVERTISEMENT: The NOA number preceded by the words Miami-Dade County, Florida, and followed by the expiration date may be displayed in advertising literature. If any portion of the NOA is displayed, then it shall be done in its entirety.

INSPECTION: A copy of this entire NOA shall be provided to the user by the manufacturer or its distributors and shall be available for inspection at the job site at the request of the Building Official.

This NOA **revises NOA # 17-0125.01** and consists of this page 1 and evidence pages E-1 and E-2, as well as approval document mentioned above.

The submitted documentation was reviewed by **Ishaq I. Chanda, P.E.**

MIAMI-DADE COUNTY APPROVED

12/7/17

NOTICE OF ACCEPTANCE: EVIDENCE SUBMITTED

1. Evidence submitted in previous files

A. DRAWINGS

1. Drawing No. **99-03**, titled "Steel Overhead Garage Door", sheets 1 through 5 of 5, dated 02/01/1999, with revision G dated 01/06/2017, prepared by Al-Farooq Corporation, signed and sealed by Javad Ahmad, P.E.

B. TESTS ***"Submitted under NOA # 13-0212.04"***

1. Test report on Large Missile Impact Test per FBC, TAS 201-94 and Cyclic Wind Pressure Loading Test per FBC, TAS 203-94 of a Model 724 24 ga Sectional Garage Door, prepared by Hurricane Engineering & Testing, Inc., Test Report No. **HETI-13-4077**, dated 07/16/2013, signed and sealed by Rafael E. Droz-Seda, P.E.
2. Test report of Uniform Static Air Pressure Test, Loading and Forced Entry Resistance Test per FBC, TAS 202-94 of a Model 724 24 ga Sectional Garage Door, prepared by Hurricane Engineering & Testing, Inc., Test Report No. **HETI-13-4076**, dated 07/16/2013, signed and sealed by Rafael E. Droz-Seda, P.E.
3. Test report of Tensile Test per ASTM E8 of a Sectional Garage Door Skin, prepared by Hurricane Engineering & Testing, Inc., Test Report No. **HETI-13-T394**, dated 09/04/2013, signed and sealed by Rafael E. Droz-Seda, P.E.

"Submitted under NOA # 99-0402.02"

4. Test report of Large Missile Impact Test per FBC, TAS 201-94 and Cyclic Wind Pressure Test per FBC, TAS 203 on Sectional Commercial Door, prepared by Hurricane Engineering & Testing, Inc., Report No. **HETI 98-770**, dated 12/10/1998, signed and sealed by H. M. Medina, P.E.
5. Test report of Uniform Static Air Pressure Test and Forced Entry Resistance Test per FBC, TAS 202-94 on Sectional Commercial Door, prepared by Hurricane Engineering & Testing, Inc., Report No. **HETI 98-763**, dated 11/19/1998, signed and sealed by H. M. Medina, P.E.

C. CALCULATIONS ***"Submitted under NOA # 14-1014.09"***

1. Anchoring verification calculations prepared by Al-Farooq Corporation, dated 09/23/2014, signed and sealed by Javad Ahmad, P.E.

"Submitted under NOA # 09-0218.11"

2. Anchoring verification calculations prepared by Al-Farooq Corporation, complying with F.B.C 2007, dated 01/21/2009, signed and sealed by Humayoun Farooq, P.E.

D. QUALITY ASSURANCE

1. Miami-Dade Department of Regulatory and Economic Resources (RER.

Ishaq I. Chanda

Ishaq I. Chanda, P.E.
Product Control Examiner
NOA No. 17-1018.16
Expiration Date: July 22, 2022
Approval Date: December 14, 2017

NOTICE OF ACCEPTANCE: EVIDENCE SUBMITTED

E. MATERIAL CERTIFICATIONS

1. Notice of Acceptance No. **14-0311.08**, issued to Insulfoam, LLC, for their Insulfoam Expanded Polystyrene Insulation, approved on 08/14/2014 and expiring on 11/29/2017.
2. Notice of Acceptance No. **15-1203.04**, issued to Cellofoam North America Inc, for their Expanded Polystyrene Block Insulation, approved on 03/17/2016 and expiring on 02/24/2021.

F. STATEMENTS

1. Statement letter of code conformance to 5th edition (2014) FBC and of no financial interest issued by Al-Farooq Corporation, dated 01/10/2017, signed and sealed by Javad Ahmad, P.E.

   "Submitted under NOA # 13-0212.04"
2. Statement letter of code conformance to 2010 FBC issued by Al-Farooq Corporation, dated 02/07/2013, signed and sealed by Javad Ahmad, P.E.

2. New Evidence submitted.

A. DRAWINGS

1. Drawing No. **99-03 Rev H**, titled "Steel Overhead Garage Door", sheets 1 through 5 of 5, dated 02/01/1999 and last revised on OCT 09, 2017, sheets 1 through 5 of 5, prepared by Al-Farooq Corporation, signed and sealed by Javad Ahmad, P.E.

Note: This revision consist of editorial changes to comply with FBC 2017.

B. CALCULATIONS

1. None

C. QUALITY ASSURANCE

1. Miami Dade Department of Regulatory and Economic Resources (RER).

D. MATERIAL CERTIFICATIONS

1. Notice of Acceptance No. **17-0221.06**, issued to Insulfoam, LLC, for their Insulfoam Expanded Polystyrene Insulation, expiring on 11/29/2022.
2. Notice of Acceptance No. **16-1108.04**, issued to Dyplast Products, LLC, for their Dyplast ISO-C1 Polyisocyanurate Insulation, expiring on 01/11/2022.
3. Notice of Acceptance No. **15-1203.04**, issued to Cellofoam North America Inc, for their Expanded Polystyrene Block Insulation, expiring on 02/24/2021.

E. STATEMENTS

1. Statement letter of conformance to FBC 2014 (**5th** Edition) and FBC 2017 (**6th** Edition), prepared by Al Farooq Corporation, dated 10/09/17, signed and sealed by Javad Ahmad, P.E.

F. OTHER

1. This NOA **revises NOA # 17-0125.01**, expiring 07/22/22.

Ishaq I. Chanda

Ishaq I. Chanda, P.E.
Product Control Examiner
NOA No. 17-1018.16
Expiration Date: July 22, 2022
Approval Date: December 14, 2017

DOOR WIDTH	NO. OF STILES
12'-3" TO 16'-11"	(4) CENTER STILES
17'-0" TO 18'-2"	(5) CENTER STILES

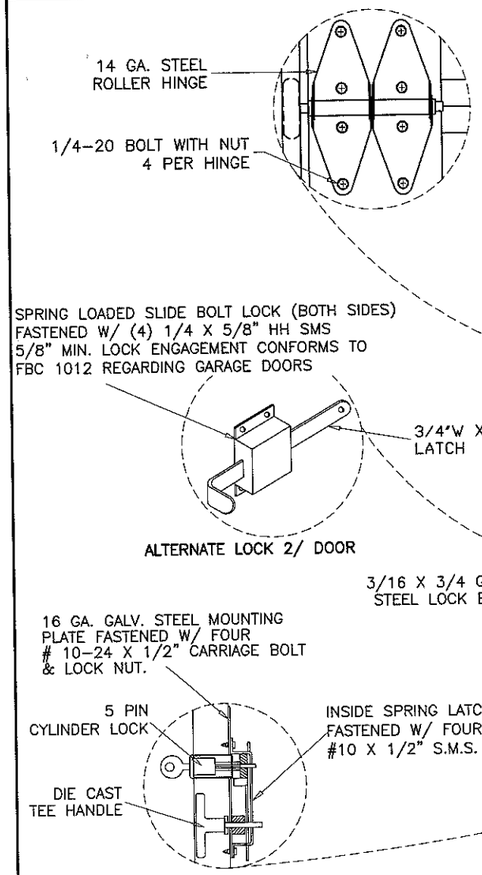

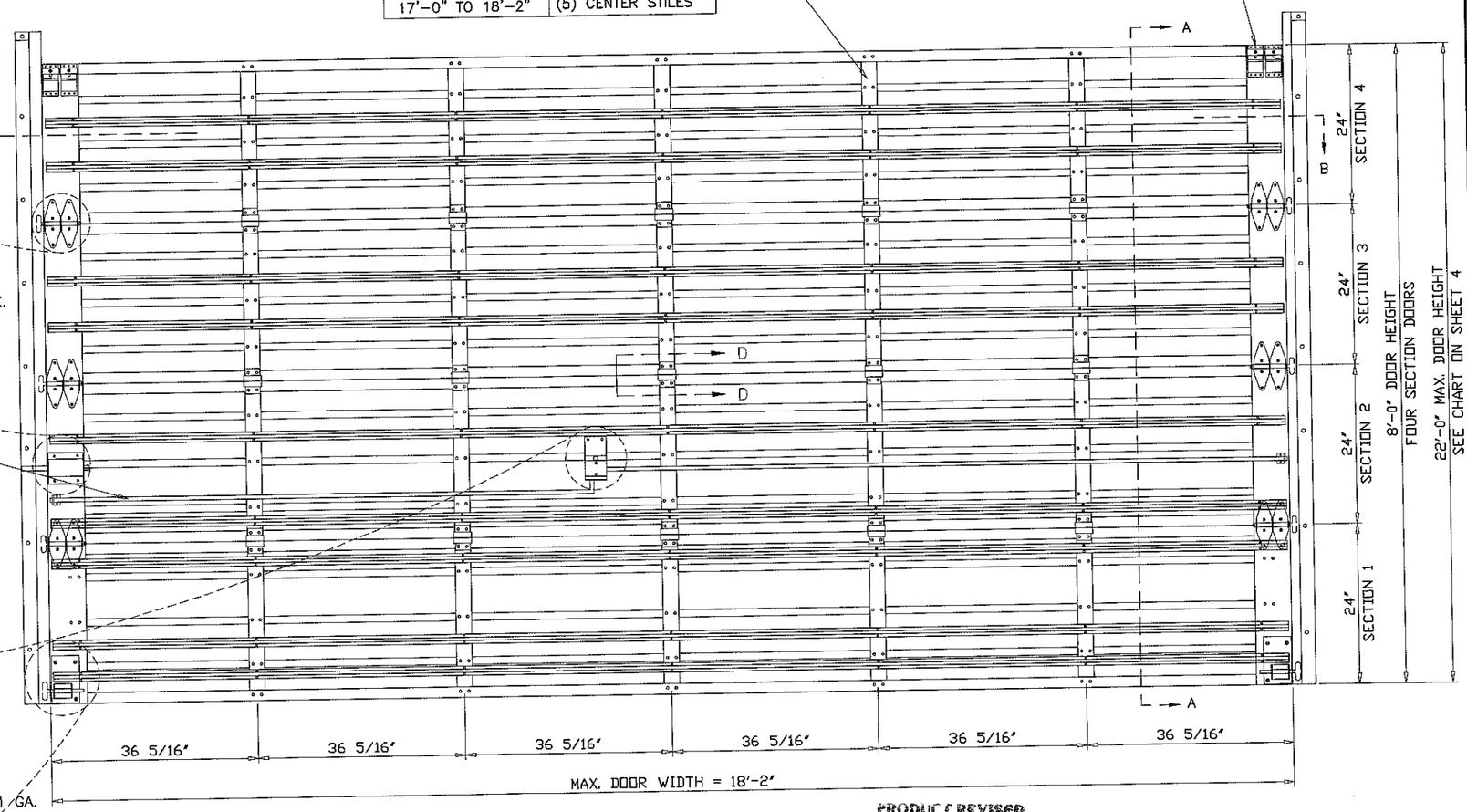

INSIDE ELEVATION

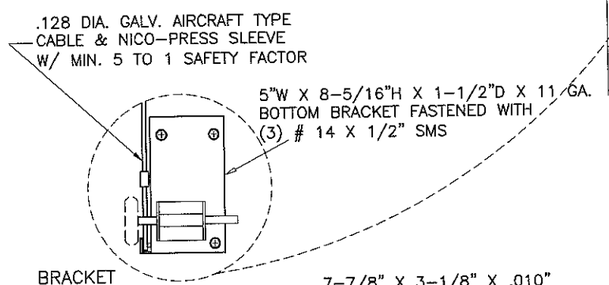

BRACKET STD. LIFT DOOR

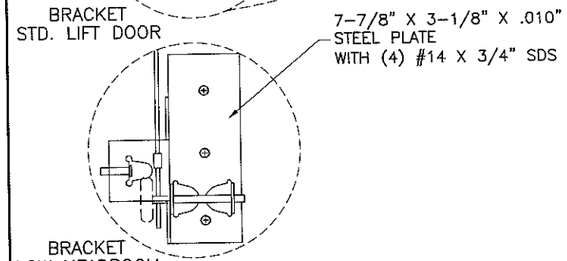

BRACKET LOW HEADROOM DOOR OPTION

THIS PRODUCT IS RATED FOR LARGE MISSILE IMPACT

PRODUCT REVISED as complying with the Florida Building Code
Acceptance No 17-1018-16
Expiration Date July 22, 2022
By [illegible]
Miami-Dade Product Control

J.B. DOOR MODELS: 18'-2"W X 22'H MAX	
MODEL	DESCRIPTION
724	24 GA. ROLL FORMED STEEL DOOR
720	20 GA. ROLL FORMED STEEL DOOR

NOTE: MODEL 724 TESTED.

MAXIMUM DESIGN LOAD RATING = + 50.0 PSF
(FOR SIZES SHOWN OR SMALLER) − 60.0 PSF

GENERAL NOTES

1. THIS PRODUCT HAS BEEN DESIGNED AND TESTED TO COMPLY WITH THE REQUIREMENTS OF THE 2014 (5TH EDITION)/2017 (6TH EDITION) FLORIDA BUILDING CODE INCLUDING HIGH VELOCITY HURRICANE ZONE (HVHZ).
2. ANCHORS SHALL BE CORROSION RESISTANT, SPACED AS SHOWN ON DETAILS AND INSTALLED PER MANUF'S INSTRUCTIONS. SPECIFIED EMBEDMENT TO BASE MATERIAL SHALL BE BEYOND WALL DRESSING OR STUCCO.
3. A LOAD DURATION INCREASE IS USED IN DESIGN OF ANCHORS INTO WOOD ONLY.
4. MATERIALS INCLUDING BUT NOT LIMITED TO STEEL/METAL SCREWS, THAT COME INTO CONTACT WITH OTHER DISSIMILAR MATERIALS SHALL MEET THE REQUIREMENTS OF THE 2014/2017 FLORIDA BLDG. CODE & ADOPTED STANDARDS.
5. THIS PRODUCT APPROVAL IS GENERIC AND DOES NOT PROVIDE INFORMATION FOR A SITE SPECIFIC PROJECT, i.e. LIFE SAFETY OF THIS PRODUCT, ADEQUACY OF STRUCTURE RECEIVING THIS PRODUCT AND SEALING AROUND OPENING FOR WATER INFILTRATION RESISTANCE ETC. CONDITIONS NOT SHOWN IN THIS DRAWING ARE TO BE ANALYZED SEPARATELY, AND TO BE REVIEWED BY BUILDING OFFICIAL.
6. MANUFACTURER'S LABEL SHALL BE LOCATED ON A READILY VISIBLE LOCATION IN ACCORDANCE WITH SECTION 1709.9.3 OF FLORIDA BUILDING CODE. LABELING TO COMPLY WITH SECTION 1709.9.2.

JAVAD AHMAD LICENSE No. 70592 STATE OF FLORIDA PROFESSIONAL ENGINEER

AL-FAROOQ CORPORATION
ENGINEERS & PRODUCT DEVELOPMENT
9360 SUNSET DRIVE, SUITE 220
MIAMI, FLORIDA 33173
(C.A.N. 3538)
TEL. (305) 264-8100 FAX. (305) 262-6978

GARAGE\99-03JB

STEEL OVERHEAD GARAGE DOOR

J.B. Garage Doors Inc.
12195 N.W. 98th Ave.
Hialeah Gardens, Fl. 33018
Tel: (305) 822-7870 Fax: (305) 362-9272

revisions:			
no	date	by	description
E	9.13.13		NO CHANGE THIS SHEET
F	07.21.14		UPDATED TO 2014 FBC
G	01.06.17		EDITORIAL CHANGES
H	08.01.17		UPDATED TO 2017 FBC

date: 02-01-99
scale: NONE
dr. by: TARIQ
chk. by:

drawing no. 99-03

sheet 1 of 5

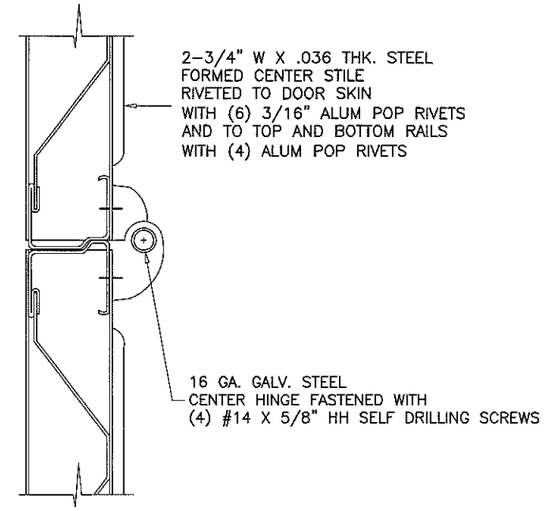

SECTION D-D

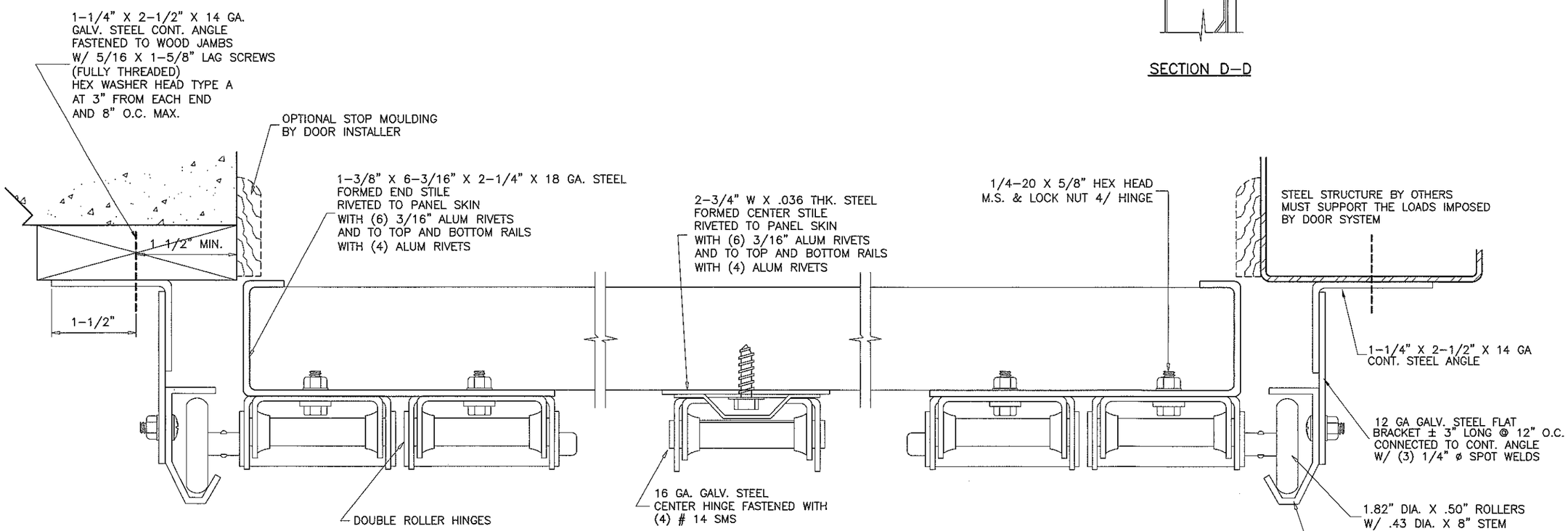

INTERIOR SIDE

SECTION B-B

FOR CONNECTION OF WOOD BUCK
TO MASONRY SEE NOTE ON SHEET 5
FOR CONNECTION DIRECTLY TO CONCRETE
SEE ALTERNATE DETAIL SHEET 5
CONNECTION TO METAL BUILDING TO BE
ENGINEERED ON JOB TO JOB BASIS.

PRODUCT REVISED
as complying with the Florida
Building Code
Acceptance No 17-1018.16
Expiration Date 7/22/22
By [signature]
Miami-Dade Product Control

JAVAD AHMAD
LICENSE
No. 70592
STATE OF FLORIDA
PROFESSIONAL ENGINEER

AL-FAROOQ CORPORATION
ENGINEERS & PRODUCT DEVELOPMENT
9360 SUNSET DRIVE, SUITE 220
MIAMI, FLORIDA 33173 (C.A.N. 3538)
TEL. (305) 264-8100 FAX. (305) 262-6978

GARAGE\99-03JB

STEEL OVERHEAD GARAGE DOOR

J.B. Garage Doors Inc.
12195 N.W. 98th Ave.
Hialeah Gardens, Fl. 33018
Tel: (305) 822-7870 Fax: (305) 362-9272

revisions:

no	date	by	description
E	9.13.13		NO CHANGE THIS SHEET
F	07.21.14		NO CHANGE THIS SHEET
G	01.06.17		EDITORIAL CHANGES
H	08.01.17		NO CHANGE THIS SHEET

date: 02-01-99
scale: NONE
dr. by: TARIQ
chk. by:

drawing no.
99-03

sheet 2 of 5

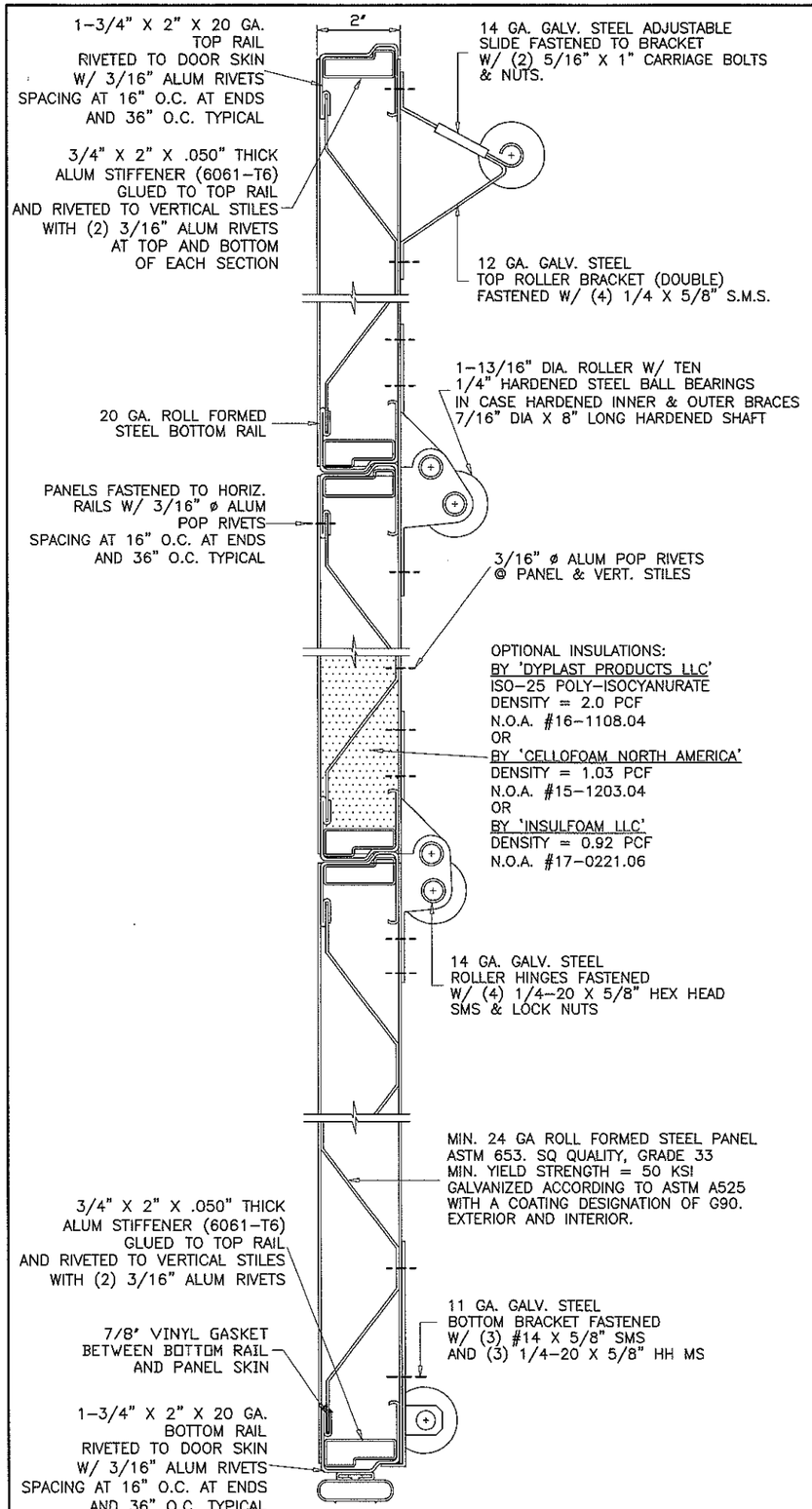

SECTION A-A

SEE SECTIONS AT RIGHT FOR LOCATION OF REINFORCING TRUSSES

TWO (2) REINFORCING TRUSSES PER SECTION
EXCEPT
THREE (3) ON THE BOTTOM SECTION

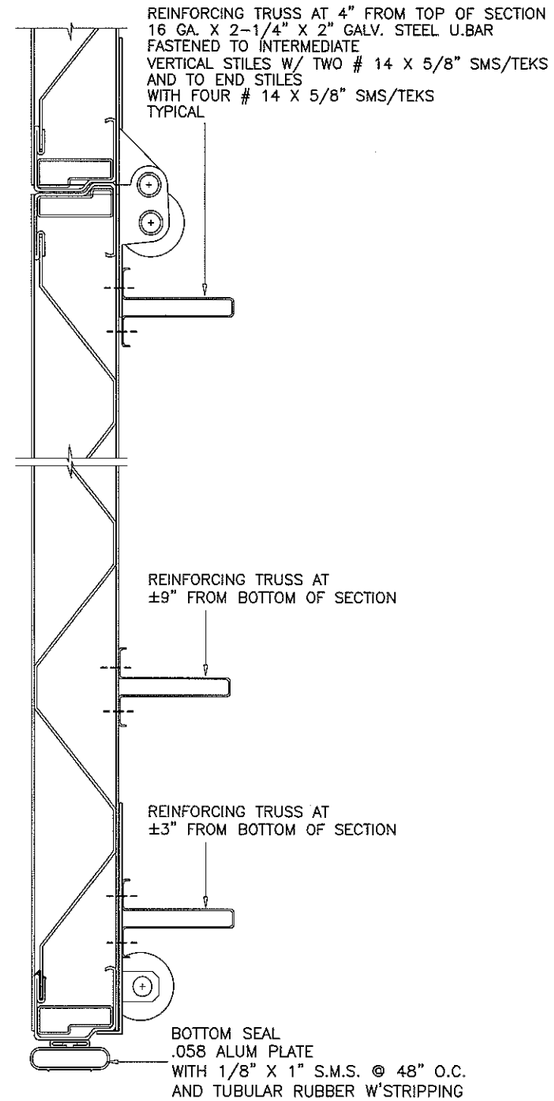

1ST SECTION (BOTTOM)

REINFORCING

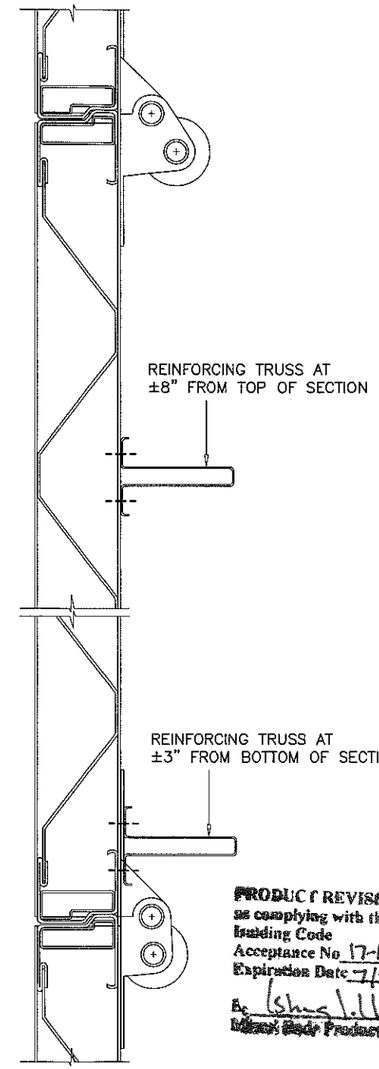

2ND SECTION (BOTTOM)

REINFORCING

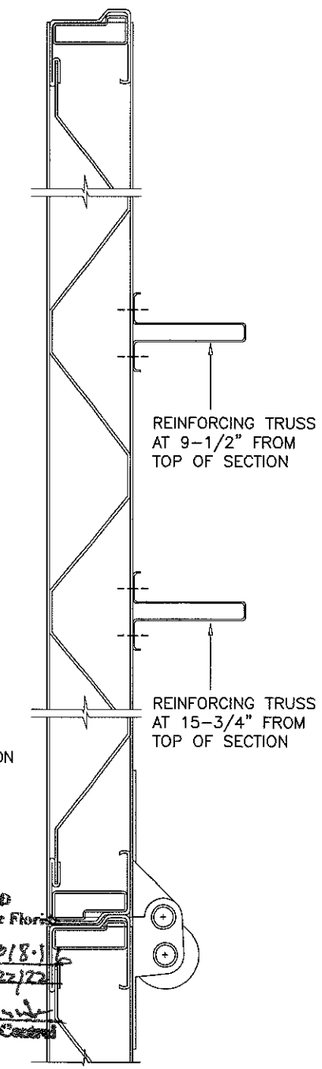

ALL TOP SECTIONS

REINFORCING

PRODUCT REVISED
as complying with the Florida Building Code
Acceptance No. 17-1018.1
Expiration Date 7/22/22
By [signature]
Miami-Dade Product Control

JAVAD AHMAD
LICENSE
No. 70592
STATE OF FLORIDA
PROFESSIONAL ENGINEER

AL-FAROOQ CORPORATION
ENGINEERS & PRODUCT DEVELOPMENT
9360 SUNSET DRIVE, SUITE 220
MIAMI, FLORIDA 33173 (C.A.N. 3538)
TEL. (305) 264-8100 FAX. (305) 262-6978

GARAGE\99-03JB

STEEL OVERHEAD GARAGE DOOR

J.B. Garage Doors Inc.
12195 N.W. 98th Ave.
Hialeah Gardens, Fl. 33018
Tel: (305) 822-7870 Fax: (305) 362-9272

revisions:

no	date	by	description
E	9.13.13		REV. PER RER COMMENTS
F	07.21.14		UPDATED TO 2014 FBC
G	01.06.17		EDITORIAL CHANGES
H	08.01.17		UPDATED TO 2017 FBC

date: 02-01-99
scale: NONE
dr. by: TARIQ
chk. by:

drawing no. 99-03

sheet 3 of 5

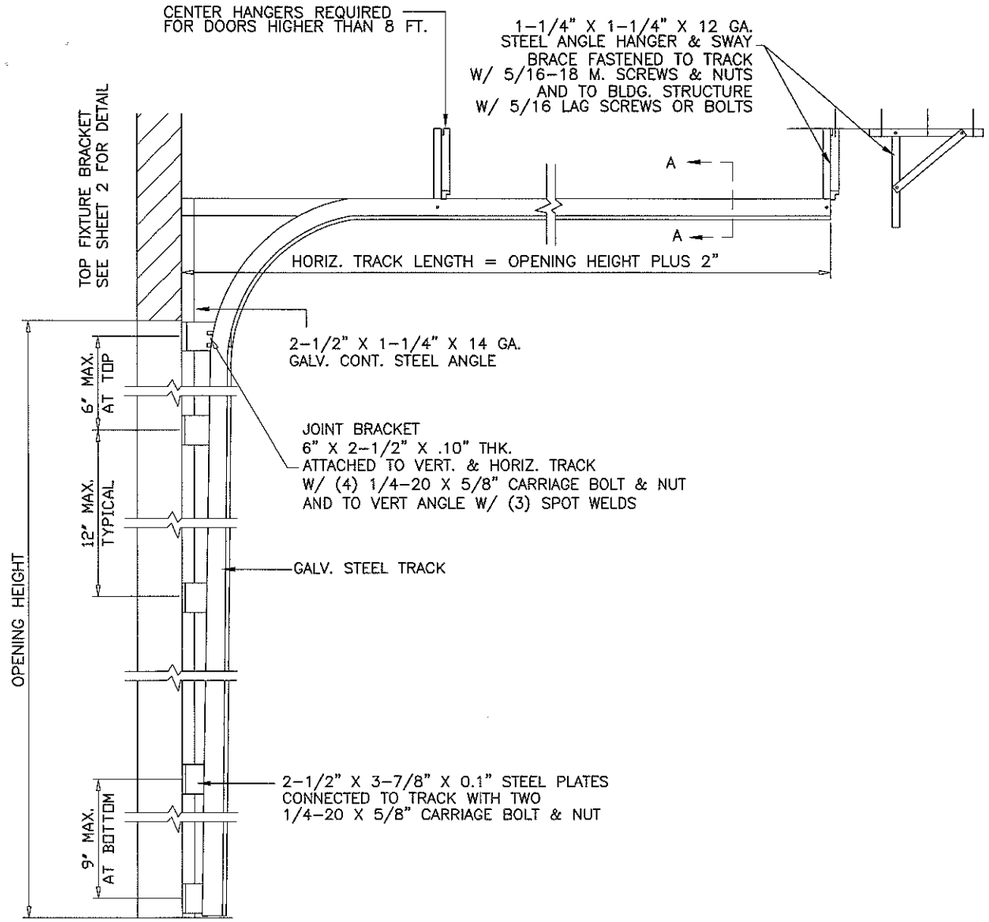

DOOR TRACK AS VIEWED FROM CENTER OF OPENING

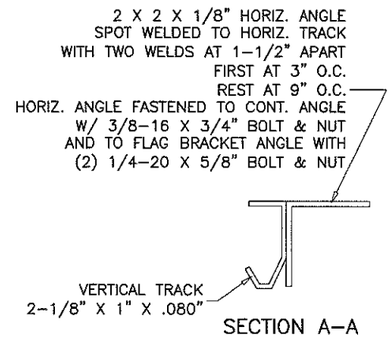

SECTION A-A

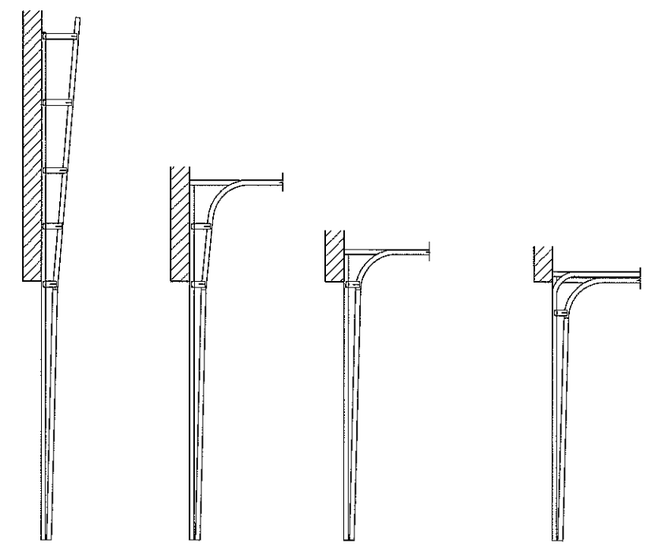

VERTICAL LIFT | HIGH LIFT | STANDARD LIFT | LOW HEADROOM

AVAILABLE TRACK OPTIONS

DOOR HEIGHT	NO. OF TRUSSES	SECTION HEIGHTS *										
		1ST	2ND	3RD	4TH	5TH	6TH	7TH	8TH	9TH	10TH	11TH
7'-0"	9	21"	21"	21"	21"	N/A	N/A	N/A	N/A	N/A	N/A	N/A
8'-0"	9	24"	24"	24"	24"	N/A	N/A	N/A	N/A	N/A	N/A	N/A
9'-0"	11	24"	21"	21"	21"	21"	N/A	N/A	N/A	N/A	N/A	N/A
10'-0"	11	24"	24"	24"	24"	24"	N/A	N/A	N/A	N/A	N/A	N/A
11'-0"	13	24"	24"	21"	21"	21"	21"	N/A	N/A	N/A	N/A	N/A
12'-0"	13	24"	24"	24"	24"	24"	24"	N/A	N/A	N/A	N/A	N/A
13'-0"	15	24"	24"	24"	21"	21"	21"	21"	N/A	N/A	N/A	N/A
14'-0"	15	24"	24"	24"	24"	24"	24"	24"	N/A	N/A	N/A	N/A
15'-0"	17	24"	24"	24"	24"	21"	21"	21"	21"	N/A	N/A	N/A
16'-0"	17	24"	24"	24"	24"	24"	24"	24"	24"	N/A	N/A	N/A
17'-0"	19	24"	24"	24"	24"	24"	21"	21"	21"	21"	N/A	N/A
18'-0"	19	24"	24"	24"	24"	24"	24"	24"	24"	24"	N/A	N/A
19'-0"	21	24"	24"	24"	24"	24"	24"	21"	21"	21"	21"	N/A
20'-0"	21	24"	24"	24"	24"	24"	24"	24"	24"	24"	24"	N/A
21'-0"	23	24"	24"	24"	24"	24"	24"	24"	21"	21"	21"	21"
22'-0"	23	24"	24"	24"	24"	24"	24"	24"	24"	24"	24"	24"

*-SECTIONS ARE NUMBERED STARTING AT THE BOTTOM

PRODUCT REVISED
as complying with the Florida
Building Code
Acceptance No 17-1018.16
Expiration Date 7/22/22
By Ishay I. Chaudhuri
Miami-Dade Product Control

JAVAD AHMAD
LICENSE
No. 70592
STATE OF FLORIDA
PROFESSIONAL ENGINEER

AL-FAROOQ CORPORATION
ENGINEERS & PRODUCT DEVELOPMENT
9360 SUNSET DRIVE, SUITE 220
MIAMI, FLORIDA 33173 (C.A.N. 9638)
TEL. (305) 264-8100 FAX. (305) 262-6978

GARAGE\99-03JB

STEEL OVERHEAD GARAGE DOOR

J.B. Garage Doors Inc.
12195 N.W. 98th Ave.
Hialeah Gardens, Fl. 33018
Tel: (305) 822-7870 Fax: (305) 362-9272

revisions:

no	date	by	description
E	9.13.13		NO CHANGE THIS SHEET
F	07.21.14		NO CHANGE THIS SHEET
G	01.06.17		EDITORIAL CHANGES
H	08.01.17		NO CHANGE THIS SHEET

date: 02-01-99
scale: NONE
dr. by: TARIQ
chk. by:

drawing no.
99-03

sheet 4 of 5

ANCHOR SPACING				
ANCHORS	STRUCTURE	EMBED	SPACING	EDGE DIST.
3/8" HLC SLEEVE BY 'HILTI'	CONC.	1-1/4"	8"	3"
3/8" CONFLEX BY 'ELCO'	FILLED BLOCK	2"	8"	3-3/4"
3/8" DYNABOLT BY 'ITW'	CONC.	1-1/2"	8"	3-1/2"
3/8" POWER-BOLT BY 'POWERS'	CONC.	2"	8"	1-7/8"
3/8" SLEEVE-ALL BY 'SIMPSONS'	CONC.	1-1/2"	8"	3-1/2"

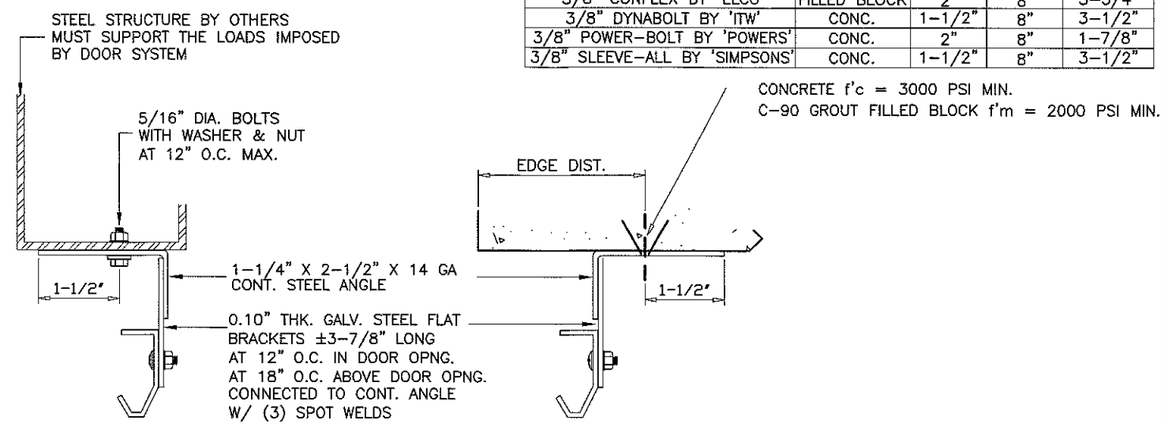

TRACK INSTALLATION

WOOD FRAME BUILDINGS

STUD WALLS OR DOOR OPENING (NOT BY J.B. DOORS) SHALL BE FRAMED SOLID BY NOT LESS THAN (3) 2X6 PRESSURE TREATED GRADE 2 SYP OR BETTER WOOD STUDS.
STUD WALLS TO BE CONT. FROM FOOTING TO TIE BEAM.
ENGINEER OF RECORD TO VERIFY ADEQUACY OF THE SUPPORTING STRUCTURE.

WOOD BUCK CONNECTION TO MASONRY

TRACK SHALL BE SECURED WITH CONT. STEEL ANGLE TO PRESSURE TREATED 2X6 SYP WOOD JAMBS WHICH SHALL BE ANCHORED TO GROUTED REINFORCED MASONRY BLOCK WALL OR CONC. COLUMN WITH

1/4" ULTRACON BY 'ELCO' WITH SPACING OF
6" O.C. INTO GROUT FILLED BLOCK WALL, WITH 2-1/4" MIN. EMBED
7" O.C. INTO 3000 PSI CONCRETE, WITH 1-3/4" MIN. EMBED
2-1/2" MIN. EDGE DISTANCE

1/4" TAPPER BY 'POWERS' WITH SPACING OF
5" O.C. INTO GROUT FILLED BLOCK WALL, WITH 1-1/2" MIN. EMBED
5" O.C. INTO 3000 PSI CONCRETE, WITH 1-3/4" MIN. EMBED
3" MIN. EDGE DISTANCE

3/8" CONFLEX BY 'ELCO' OR
3/8" LDT BY 'ITW' WITH SPACING OF
12" O.C. INTO 3000 PSI CONCRETE, WITH 2-1/2" MIN. EMBED
3" MIN. EDGE DISTANCE

3/8" HLC SLEEVE BY 'HILTI' WITH SPACING OF
7" O.C. INTO 3000 PSI CONCRETE, WITH 1-1/4" MIN. EMBED AND
2-1/2" MIN. EDGE DISTANCE

THE BLOCK WALL CELLS SHALL BE GROUT FILLED AND REINFORCED WITH FOUR # 5 BARS EXTENDING INTO FOOTING AND INTO TIE BEAMS ALL BARS SHALL BE CONTINUOUS FROM TIE BEAMS TO FOOTING.

PREPARATION OF JAMBS BY OTHERS

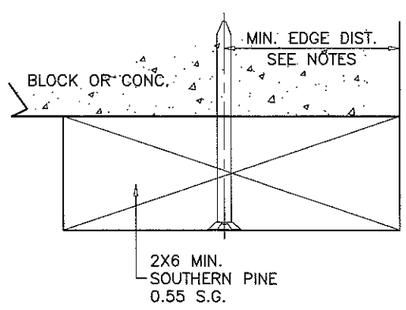

PRODUCT REVISED
as complying with the Florida
Building Code
Acceptance No 17-1018.16
Expiration Date July 22, 2022
By [signature]
Manager, Product Control

JAVAD AHMAD
LICENSE
No. 70592
STATE OF FLORIDA
PROFESSIONAL ENGINEER

AL-FAROOQ CORPORATION
ENGINEERS & PRODUCT DEVELOPMENT
9360 SUNSET DRIVE, SUITE 220
MIAMI, FLORIDA 33173 (C.A.N. 3538)
TEL. (305) 264-8100 FAX. (305) 262-6978

GARAGE\99-03JB

STEEL OVERHEAD GARAGE DOOR

J.B. Garage Doors Inc.
12195 N.W. 98th Ave.
Hialeah Gardens, Fl. 33018
Tel: (305) 822-7870 Fax: (305) 362-9272

revisions:

no	date	by	description
E	9.13.13		NO CHANGE THIS SHEET
F	07.21.14		UPDATED TO 2014 FBC
G	01.06.17		EDITORIAL CHANGES
H	08.01.17		NO CHANGE THIS SHEET

date: 02-01-99
scale: NONE
dr. by: TARIQ
chk. by:

drawing no.
99-03

sheet 5 of 5