MIAMI-DADE COUNTY
PRODUCT CONTROL SECTION
11805 SW 26 Street, Room 208
Miami, Florida 33175-2474
T (786) 315-2590 F (786) 315-2599
www.miamidade.gov/economy

DEPARTMENT OF REGULATORY AND ECONOMIC RESOURCES (RER)
BOARD AND CODE ADMINISTRATION DIVISION

NOTICE OF ACCEPTANCE (NOA)

Sunshine Windows Manufacturing, Inc.
1745 W. 33rd Place
Hialeah, FL 33012

SCOPE:

This NOA is being issued under the applicable rules and regulations governing the use of construction materials. The documentation submitted has been reviewed and accepted by Miami-Dade County RER -Product Control Section to be used in Miami Dade County and other areas where allowed by the Authority Having Jurisdiction (AHJ).

This NOA shall not be valid after the expiration date stated below. The Miami-Dade County Product Control Section (In Miami Dade County) and/or the AHJ (in areas other than Miami Dade County) reserve the right to have this product or material tested for quality assurance purposes. If this product or material fails to perform in the accepted manner, the manufacturer will incur the expense of such testing and the AHJ may immediately revoke, modify, or suspend the use of such product or material within their jurisdiction. RER reserves the right to revoke this acceptance, if it is determined by Miami-Dade County Product Control Section that this product or material fails to meet the requirements of the applicable building code.

This product is approved as described herein, and has been designed to comply with the Florida Building Code, including the High Velocity Hurricane Zone.

DESCRIPTION: Series "2009-9H" Aluminum Sliding Glass Door w/ Reinforcements-L.M.I.

APPROVAL DOCUMENT: Drawing No: **SGD 14 Rev 1**, titled "Series 2009-9H Aluminum Sliding Glass Door (L.M.I.)", sheets 1 through 11 of 11, prepared by manufacturer, dated 09/05/14 and last revised on 10-11-17, signed and sealed by Francisco Hernandez, P.E., bearing the Miami-Dade County Product Control Revision stamp with the Notice of Acceptance number and approval date by the Miami-Dade County Product Control Section.

MISSILE IMPACT RATING: Large and Small Missile Impact Resistant

Limitations:

1. See Sheet **1** for Design Pressures and **Pairs** anchors requirements at frame jambs, intermediate anchors at head and sill (excluding cluster) and applicable to all sizes. See **Pairs** interlock/astragal clusters (Tot **8**-anchors) detail Head or sill in Conc. / Metal or Wood substrates in sheet **1,** applicable to all configurations in sheet **2.**
2. See sheets 3, 4 and 5 for full length steel reinforcement requirements at interlocks/astragal. Fix panel jamb full length clip item #11 to be secured with (2) item #29 from 4" corner and 14" OC.
3. Head and sill installation is limited into concrete and jambs may be into concrete or grouted masonry blocks.

LABELING: Each unit shall bear a permanent label with the manufacturer's name or logo, city, state and series and following statement: "Miami-Dade County Product Control Approved", noted herein.

RENEWAL of this NOA shall be considered after a renewal application has been filed and there has been no change in the applicable building code negatively affecting the performance of this product.

TERMINATION of this NOA will occur after the expiration date or if there has been a revision or change in the materials, use, and/or manufacture of the product or process. Misuse of this NOA as an endorsement of any product, for sales, advertising or any other purposes shall automatically terminate this NOA. Failure to comply with any section of this NOA shall be cause for termination and removal of NOA.

ADVERTISEMENT: The NOA number preceded by the words Miami-Dade County, Florida, and followed by the expiration date may be displayed in advertising literature. If any portion of the NOA is displayed, then it shall be done in its entirety.

INSPECTION: A copy of this entire NOA shall be provided to the user by the manufacturer or its distributors and shall be available for inspection at the job site at the request of the Building Official.

This NOA **revises NOA # 14-0926.17** and consists of this page 1 and evidence pages E-1and E-2, as well as approval document mentioned above.

The submitted documentation was reviewed by **Ishaq I. Chanda, P.E.**

MIAMI-DADE COUNTY APPROVED

12/18/17

NOTICE OF ACCEPTANCE: EVIDENCE SUBMITTED

1. Evidence submitted in previous files

A. DRAWINGS

1. Manufacturer's die drawings and sections
2. Drawing No: **SGD 14**, titled "Series 2009-9H Aluminum Sliding Glass Door (L.M.I.)", sheets 1 through 11 of 11, prepared by manufacturer, dated 09/05/14 and last revised on 07-22-15, signed and sealed by Francisco Hernandez, P.E.

B. TESTS

1. Test reports on: 1) Air Infiltration Test, per FBC, TAS 202-94
   2) Uniform Static Air Pressure Test, Loading per FBC TAS 202-94
   3) Water Resistance Test, per FBC, TAS 202-94
   4) Large Missile Impact Test per FBC, TAS 201-94
   5) Cyclic Wind Pressure Loading per FBC, TAS 203-94
   6) Forced Entry Test, per FBC 2411 3.2.1, TAS 202-94

   along with marked-up drawings and installation diagrams of OXXO & XOOO Alum sliding Glass doors, prepared by Fenestration Testing Lab, Inc., Test Report No. **FTL-7663** dated 07/10/14, signed and sealed by Idalmis Ortega, P. E.
   Note: This test report has an addendum letter dated July 21, 2015, issued by Fenestration Testing lab.

C. CALCULATIONS

1. Anchor verification calculations and structural analysis, complying with FBC 2014, dated 09/05/14 and last revised on 07/22/15, prepared, signed and sealed by Francisco Hernandez, P.E.
2. Glazing complies w/ ASTME-1300-02 & -04.

D. QUALITY ASSURANCE

1. Miami Dade Department of Regulatory and Economic Resources (RER).

E. MATERIAL CERTIFICATIONS

1. Notice of Acceptance No. **14-0916.11** issued to **Kuraray America, Inc.** (Former E.I. DuPont DeNemours & Co.) for the **"SentryGlas® (Clear and White) Glass Interlayers"**, expiring on 07/04/18.

F. STATEMENTS

1. Statement letter of conformance to FBC 2014(**5th Edition**) and letter of no financial interest, dated SEP 05, 2014, prepared, signed and sealed by Francisco Hernandez, P.E.
2. Lab compliance as part of the above referenced test report.
3. E-mail RER verification test agreement by Sunshine Windows, dated Sep 11, 2015, signed by Noel Martinez, Assistant Manager.

G. OTHER

1. Test proposal dated 03/06/14, approved by Jaime D. Gascon, P.E.

Ishaq I. Chanda

Ishaq I. Chanda, P.E.
Product Control Examiner
NOA No. 17-1025.05
Expiration Date: September 24, 2020
Approval Date: December 28, 2017

NOTICE OF ACCEPTANCE: EVIDENCE SUBMITTED

1. New Evidence submitted.

A. DRAWINGS

1. Drawing No: **SGD 14 Rev 1**, titled "Series 2009-9H Aluminum Sliding Glass Door (L.M.I.)", sheets 1 through 11 of 11, prepared by manufacturer, dated 09/05/14 and last revised on 10-11-17, signed and sealed by Francisco Hernandez, P.E.

Note: This revision consists of editorial FBC 2017 code related notes in sheet 1.

B. CALCULATIONS

1. None

C. QUALITY ASSURANCE

1. Miami Dade Department of Regulatory and Economic Resources (RER).

D. MATERIAL CERTIFICATIONS

1. None

E. STATEMENTS

1. Statement letter of conformance to FBC 2017 (**6th** Edition) dated 10/23/17, prepared, signed and sealed by Francisco Hernandez, P.E.

F. OTHER

1. This NOA **revises NOA # 14-0926.17**, expiring 09/24/20.

Ishaq I. Chanda

Ishaq I. Chanda, P.E.
Product Control Examiner
NOA No. 17-1025.05
Expiration Date: September 24, 2020
Approval Date: December 28, 2017

GENERAL NOTES:

1.- THIS PRODUCT MEETS THE REQUIREMENTS OF FBC 5TH EDITION (2014) AND FBC 6TH EDITION (2017)

2.- SHUTTERS ARE NOT REQUIRED.

3.- REFERENCE TEST REPORT FTL-7663 DATED ON 7/10/2014.

4.- FOR ANCHOR TYPE AND SPACING REFER TO TYPICAL ELEVATIONS AND SECTIONS ON SHEET 2 THRU 9

5.- 1X OR 2X WOOD BUCKS NOT INCLUDED IN THE SCOPE OF THIS PRODUCT APPROVAL SHALL BE PROPERLY ATTACHED TO SUSTAIN AND TRANSFER THE LOADS IMPOSED BY THE GLAZING SYSTEM TO THE STRUCTURE AND SHALL BE APPROVED BY THE BUILDING OFFICIAL PRIOR TO DOOR INSTALLATION.

6.- WOOD HOST STRUCTURE SHALL BE SOUTHERN YELLOW PINE G = 0.55 OF GREATER DENSITY.

7.- CONCRETE / MASONRY STRUCTURE FOR UNIT ATTACHMENT SHALL COMPLY WITH THE FOLLOWING REQUIREMENTS:

- CONCRETE STRENGTH Fc'28 = 3000 PSI MIN.
- CMU AS PER ASTM C90. CMU MUST BE 8-INCH THICK, NORMAL WEIGHT BLOCKS WITH A MINIMUM COMPRESSIVE STRENGTH OF 1.9 KSI.
- FILLED CMU Fm' = 2000 PSI MIN.

8.- THE THICKNESS OF THE ALUMINUM HOST STRUCTURE SHALL NOT BE LESS THAN 1/8". ALUMINUM SHALL BE 6063-T6.

9.- ALUMINUM IN CONTACT WITH DISSIMILAR MATERIALS SHALL BE PROTECTED (BY OTHERS) AS SPECIFIED IN FBC 6TH EDITION (2017).

10.- STEEL HOST STRUCTURE SHALL NOT BE LESS THAN 1/8" THICK. STEEL SHALL BE Fy = 36 KSI MIN.

11.- FALSE COLONIAL MUNTINS CAN BE SURFACE APPLIED.

12.- USE NON-SHRINK, NON-METALLIC HYDRAULIC CEMENT GROUT PER ASTM C1107/C1107M STANDARD SPECIFICATION FOR PACKAGED DRY.

13.- GLASS: 7/16" NOMINAL LAMINATED GLASS COMPOSED OF (2) 3/16" HEAT STRENGTHENED GLASS WITH 0.09" DUPONT SENTRYGLAS INTERLAYING FILM.

14.- GLASS SHALL PENETRATE 0.904" INTO THE ALUMINUM FRAME POCKET AND WILL BE SECURED WITH DOW 899 SILICONE SEALANT ON THE INTERIOR AND VINYL BULB 3025 ON THE EXTERIOR.

15.- DOORS SHALL COMPLY WITH EGRESS REQUIREMENTS OF FBC 6TH EDITION (2017) AS APPLICABLE.

INDEX OF DRAWINGS:

DESIGN PRESSURES AND ANCHOR DISTRIBUTION CHART

NOMINAL PANEL WIDTH IN INCHES	FRAME HEIGHT IN INCHES	NUMBER OF PAIRS OF ANCHORS					DESIGN PRESSURE (PSF)	
		JAMB	CLUSTER AT EACH INTERLOCK AND/OR ASTRAGAL	INTERMEDIATE AT HEAD AND AT SILL (EXCLUDES ANCHORS AT CLUSTERS)				
				OX OR XX (1 CLUSTER)	XOO OR OXO (2 CLUSTERS)	OXXO OR XOOO (3 CLUSTERS)	EXT. (+)	INT. (-)
24	81 1/2"	7	4	4	5	6	80.0	90.0
30			4	4	5	6		
36			4	6	8	10		
48			4	6	9	12		
24	96	8	4	4	5	6		
30			4	4	5	6		
36			4	6	8	10		
48			4	6	9	12		
24	109	9	4	4	5	6		
30			4	4	5	6		
36			4	6	8	10		
48			4	6	9	12		

IMPORTANT NOTES:

THE DESIGN PRESSURES SHOWN ON THIS CHART ARE FOR ALLOWABLE STRESS DESIGN. WIND LOADS CALCULATED BASED UPON "ULTIMATE WIND SPEED" AS DETERMINED FROM ASCE 7-10 OR IBC 2012 ARE PERMITTED TO BE MULTIPLIED BY 0.6 FOR COMPARISON BETWEEN THE ACTING WIND LOADS AND THE DESIGN PRESSURE OF THE UNITS.

PANEL HEIGHT = FRAME HEIGHT - 1 1/2".

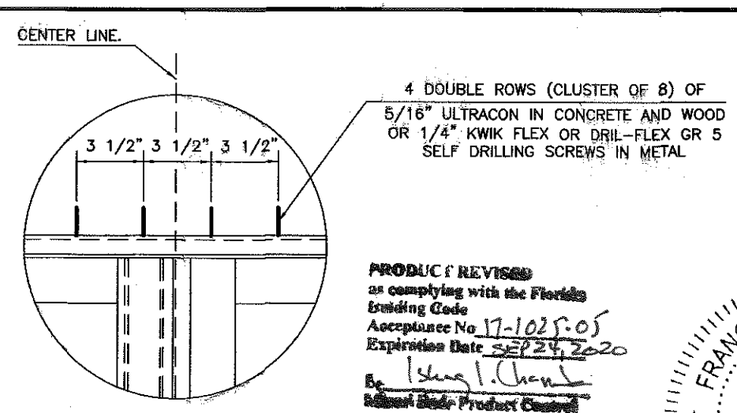

(8 ANCHORS)

USE FOR HEAD AND SILL AT ASTRAGAL AND / OR INTERLOCK.

CLUSTER DETAIL

PRODUCT REVISED as complying with the Florida Building Code
Acceptance No. 17-1025.05
Expiration Date SEP 29, 2020
By Isaac I. Chang
Building Code Product Control

FRANCISCO HERNANDEZ LICENSE No. 51393 STATE OF FLORIDA PROFESSIONAL ENGINEER

10-11-17

FRANCISCO HERNANDEZ
FLORIDA PE # 51393

GENERAL NOTES, INDEX OF DRAWINGS, DESIGN PRESSURES CHART, AND INTERLOCK ANCHOR CLUSTER DETAIL

Sunshine Windows Manufacturing, Inc.
1745 W. 33rd Place
Hialeah, Florida 33012
Ph: (305)364-9952
Fax:(305)828-5118

SERIES 2009-9H
ALUMINUM SLIDING GLASS DOOR
LARGE MISSILE IMPACT RESISTANT

No	DATE	REVISION
1	10-11-17	REVISION IN COMPLIANCE WITH FBC 6TH EDITION (2017)

DRAWING No. SGD14

DATE: 09/05/14

SCALE: 6"=1'-0"

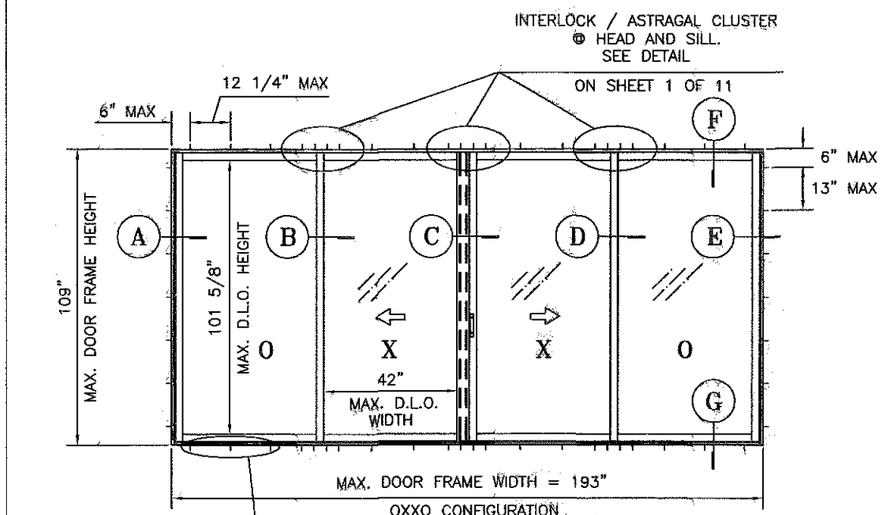

OXXO CONFIGURATION
(4 PANELS – 2 TRACKS)

INTERMEDIATE ANCHOR PAIRS @ HEAD AND SILL

USE CHART ON SHEET 1 OF 11 TO FIGURE TOTAL NUMBER OF ANCHOR PER CONFIGURATION

D.L.O. FORMULA FOR OXXO
D.L.O. HEIGHT = FRAME HEIGHT" – 7.375"
D.L.O. WIDTH = (FRAME WIDTH" – 25")/4

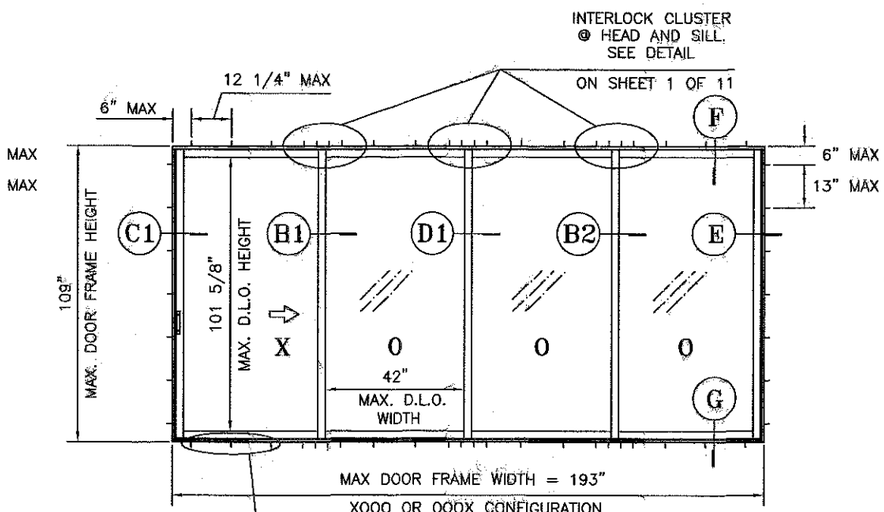

XOOO OR OOOX CONFIGURATION
(4 PANELS – 2 TRACKS, REVERSIBLE)

INTERMEDIATE ANCHOR PAIRS @ HEAD AND SILL

USE CHART ON SHEET 1 OF 11 TO FIGURE TOTAL NUMBER OF ANCHOR PER CONFIGURATION

D.L.O. FORMULA FOR XOOO / OOOX
D.L.O. HEIGHT = FRAME HEIGHT" – 7.375"
D.L.O. WIDTH = (FRAME WIDTH" – 22")/4

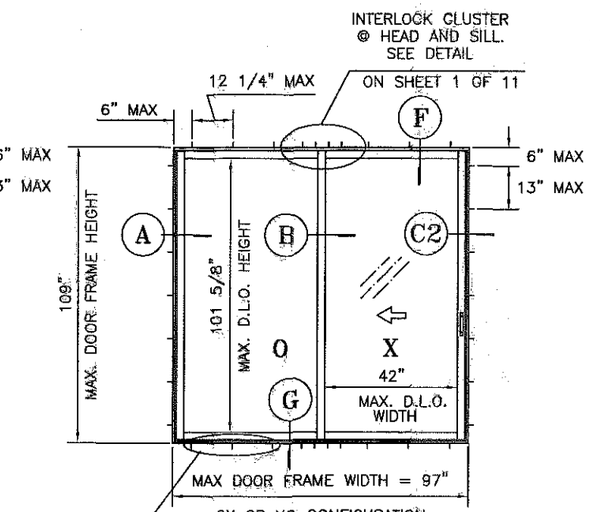

OX OR XO CONFIGURATION
(2 PANELS – 2 TRACKS, REVERSIBLE)

INTERMEDIATE ANCHOR PAIRS @ HEAD AND SILL

USE CHART ON SHEET 1 OF 11 TO FIGURE TOTAL NUMBER OF ANCHOR PER CONFIGURATION

D.L.O. FORMULA FOR OX / XO
D.L.O. HEIGHT = FRAME HEIGHT" – 7.375"
D.L.O. WIDTH = (FRAME WIDTH" – 13")/2

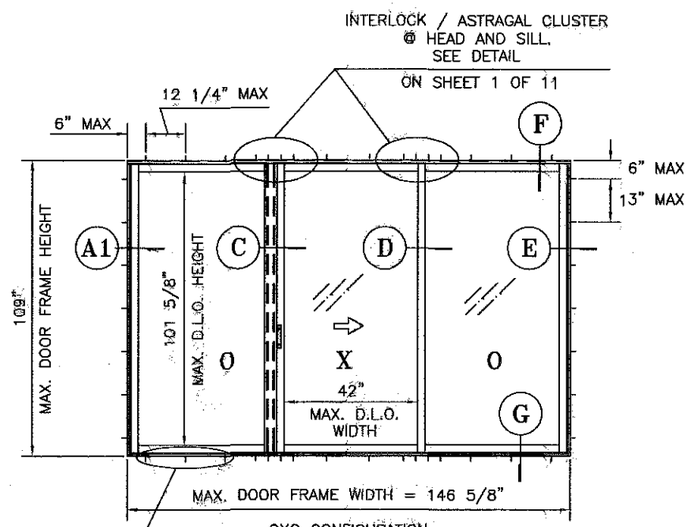

OXO CONFIGURATION
(3 PANELS – 2 TRACKS)

INTERMEDIATE ANCHOR PAIRS @ HEAD AND SILL

USE CHART ON SHEET 1 OF 11 TO FIGURE TOTAL NUMBER OF ANCHOR PER CONFIGURATION

D.L.O. FORMULA FOR OXO
D.L.O. HEIGHT = FRAME HEIGHT" – 7.375"
D.L.O. WIDTH = (FRAME WIDTH" – 20.625")/3

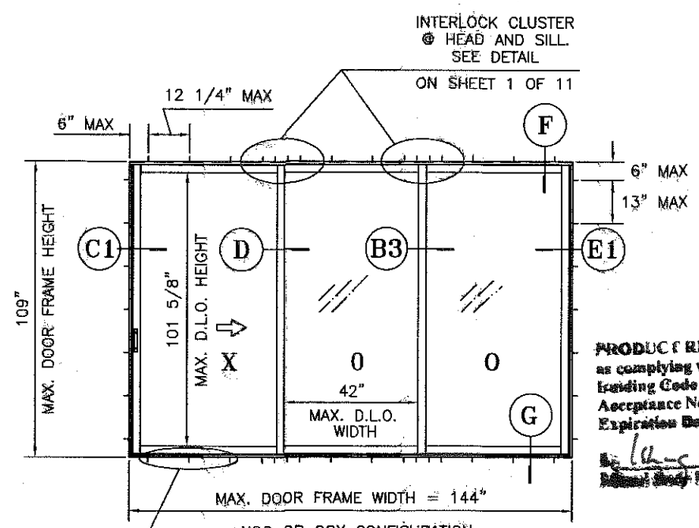

XOO OR OOX CONFIGURATION
(3 PANELS – 2 TRACKS, REVERSIBLE)

INTERMEDIATE ANCHOR PAIRS @ HEAD AND SILL

USE CHART ON SHEET 1 OF 11 TO FIGURE TOTAL NUMBER OF ANCHOR PER CONFIGURATION

D.L.O. FORMULA FOR XOO
D.L.O. HEIGHT = FRAME HEIGHT" – 7.375"
D.L.O. WIDTH = (FRAME WIDTH" – 17.75")/3

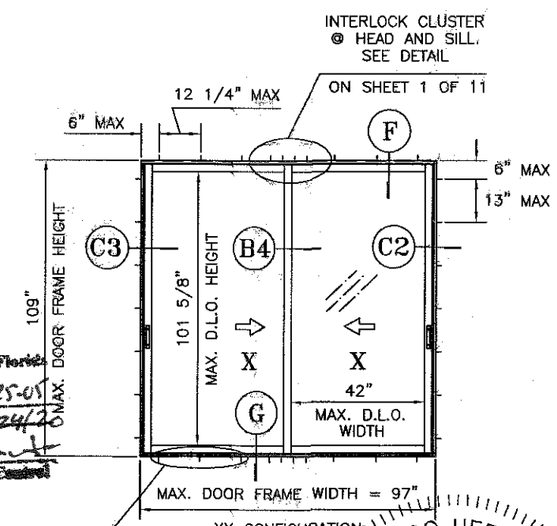

XX CONFIGURATION
(2 PANELS – 2 TRACKS)

INTERMEDIATE ANCHOR PAIRS @ HEAD AND SILL

USE CHART ON SHEET 1 OF 11 TO FIGURE TOTAL NUMBER OF ANCHOR PER CONFIGURATION

D.L.O. FORMULA FOR XX
D.L.O. HEIGHT = FRAME HEIGHT" – 7.375"
D.L.O. WIDTH = (FRAME WIDTH" – 13")/2

PRODUCT REVISED
as complying with the Florida Building Code
Acceptance No. 17-1025-01
Expiration Date 9/24/20
By
Product Control

NOTE: ANCHORS SHOWN ON ELEVATIONS ARE IN PAIRS.

ELEVATIONS OF APPROVED CONFIGURATIONS

FRANCISCO HERNANDEZ LICENSE No 51393 STATE OF FLORIDA PROFESSIONAL ENGINEER

10-11-17

FRANCISCO HERNANDEZ
FLORIDA PE # 51393

Sunshine Windows Manufacturing, Inc.
1745 W. 33rd Place
Hialeah, Florida 33012
Ph: (305)364-9952
Fax:(305)828-5118

SERIES 2009-9H
ALUMINUM SLIDING GLASS DOOR
LARGE MISSILE IMPACT RESISTANT

No	DATE	REVISION
1	10-11-17	REVISION IN COMPLIANCE WITH FBC 6TH EDITION (2017)

DRAWING No. SGD14

DATE: 09/05/14

SCALE: N.T.S.

REINFORCEMENT NOTE:
#31 – REINFORCEMENT AT THE CENTER OF THE ASTRAGAL FOR DOORS SMALLER THAN 96".
#32 – REINFORCEMENT AT THE LEFT OR RIGHT SIDE OF THE ASTRAGAL FOR DOORS EQUAL OR HIGHER THAN 96".
#33 – REINFORCEMENT AT THE INTERIOR PANELS FOR DOORS SMALLER THAN 96".
#34 – REINFORCEMENT AT THE EXTERIOR PANELS FOR DOORS EQUAL OR HIGHER THAN 96".

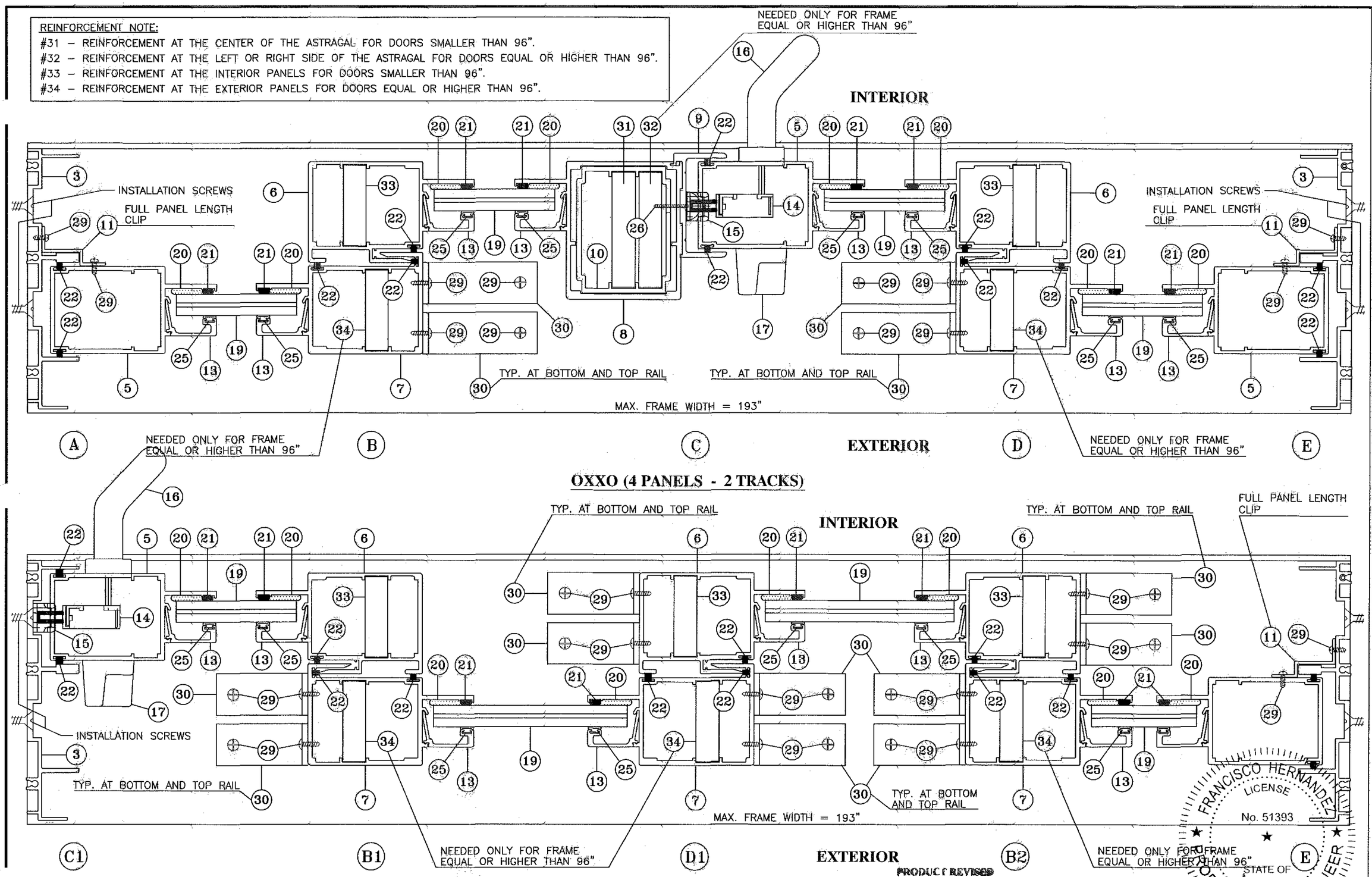

FOR INSTALLATION DETAILS SEE SHEETS 7 THRU 9

HORIZONTAL SECTIONS

PRODUCT REVISED
as complying with the Florida
Building Code
Acceptance No. 17-1025.05
Expiration Date 9/24/20
By [signature]
Miami-Dade Product Control

FRANCISCO HERNANDEZ
LICENSE
No. 51393
STATE OF FLORIDA
PROFESSIONAL ENGINEER
10-11-17
FRANCISCO HERNANDEZ
FLORIDA PE # 51393

Sunshine Windows Manufacturing, Inc.
1745 W. 33rd Place
Hialeah, Florida 33012
Ph: (305)364-9952
Fax:(305)828-5118

SERIES 2009-9H
ALUMINUM SLIDING GLASS DOOR
LARGE MISSILE IMPACT RESISTANT

No	DATE	REVISION
1	10-11-17	REVISION IN COMPLIANCE WITH FBC 6TH EDITION (2017)

DRAWING No. SGD14
DATE: 09/05/14
SCALE: 6"=1'-0"

REINFORCEMENT NOTE:
#31 – REINFORCEMENT AT THE CENTER OF THE ASTRAGAL FOR DOORS SMALLER THAN 96".
#32 – REINFORCEMENT AT THE LEFT OR RIGHT SIDE OF THE ASTRAGAL FOR DOORS EQUAL OR HIGHER THAN 96".
#33 – REINFORCEMENT AT THE INTERIOR PANELS FOR DOORS SMALLER THAN 96".
#34 – REINFORCEMENT AT THE EXTERIOR PANELS FOR DOORS EQUAL OR HIGHER THAN 96".

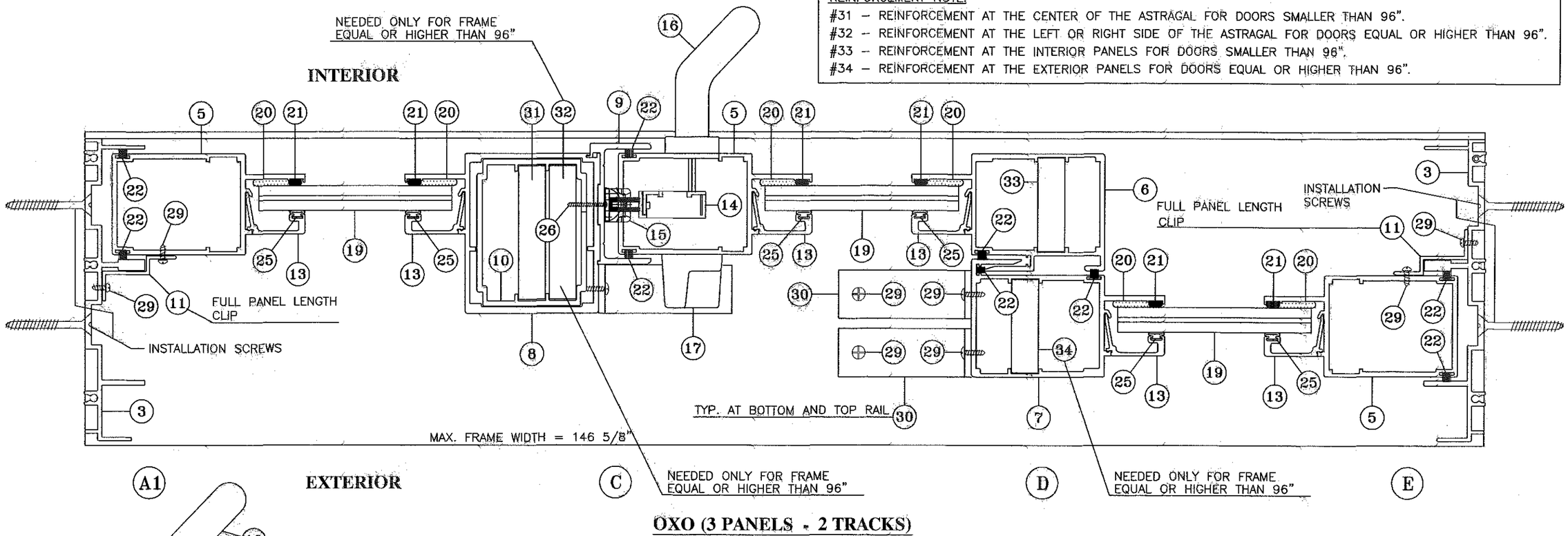

OXO (3 PANELS - 2 TRACKS)

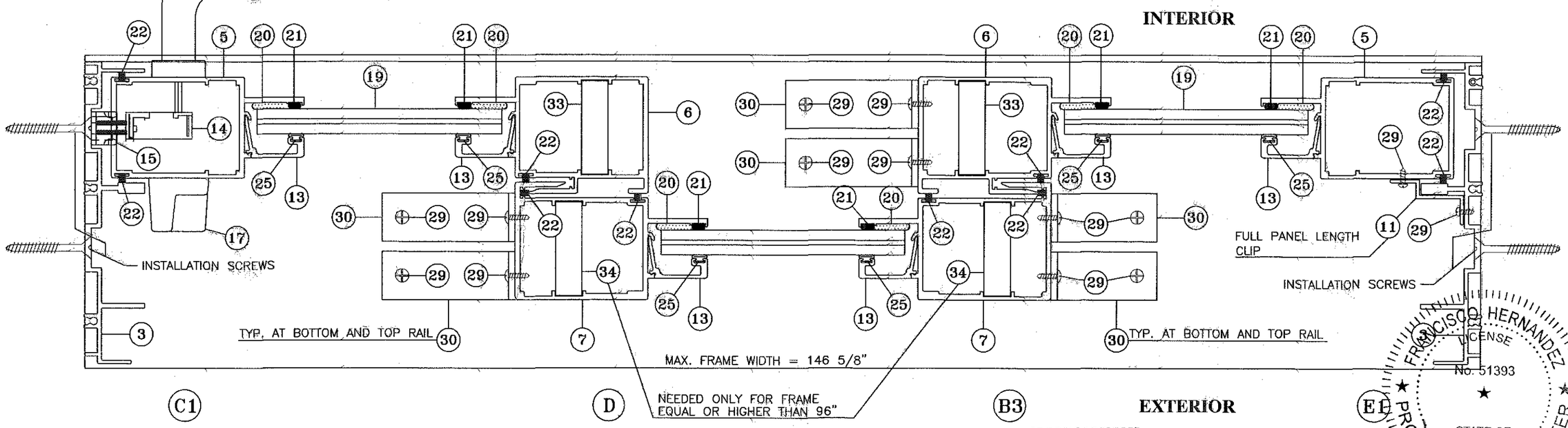

XOO OR OOX (3 PANELS - 2 TRACKS)

FOR INSTALLATION DETAILS SEE SHEETS 7 THRU 9

HORIZONTAL SECTIONS

PRODUCT REVISED
as complying with the Florida
Building Code
Acceptance No 17-1025.05
Expiration Date 9/24/20
By Product Control

FRANCISCO HERNANDEZ
LICENSE
No. 51393
STATE OF FLORIDA
PROFESSIONAL ENGINEER
10-11-17
FRANCISCO HERNANDEZ
FLORIDA PE # 51393

Sunshine Windows Manufacturing, Inc.
1745 W. 33rd Place
Hialeah, Florida 33012
Ph: (305)364-9952
Fax:(305)828-5118

SERIES 2009-9H
ALUMINUM SLIDING GLASS DOOR
LARGE MISSILE IMPACT RESISTANT

No	DATE	REVISION
1	10-11-17	REVISION IN COMPLIANCE WITH FBC 6TH EDITION (2017)

DRAWING No. SGD14
DATE: 09/05/14
SCALE: 6"=1'-0"

REINFORCEMENT NOTE:
#31 – REINFORCEMENT AT THE CENTER OF THE ASTRAGAL FOR DOORS SMALLER THAN 96".
#32 – REINFORCEMENT AT THE LEFT OR RIGHT SIDE OF THE ASTRAGAL FOR DOORS EQUAL OR HIGHER THAN 96".
#33 – REINFORCEMENT AT THE INTERIOR PANELS FOR DOORS SMALLER THAN 96".
#34 – REINFORCEMENT AT THE EXTERIOR PANELS FOR DOORS EQUAL OR HIGHER THAN 96".

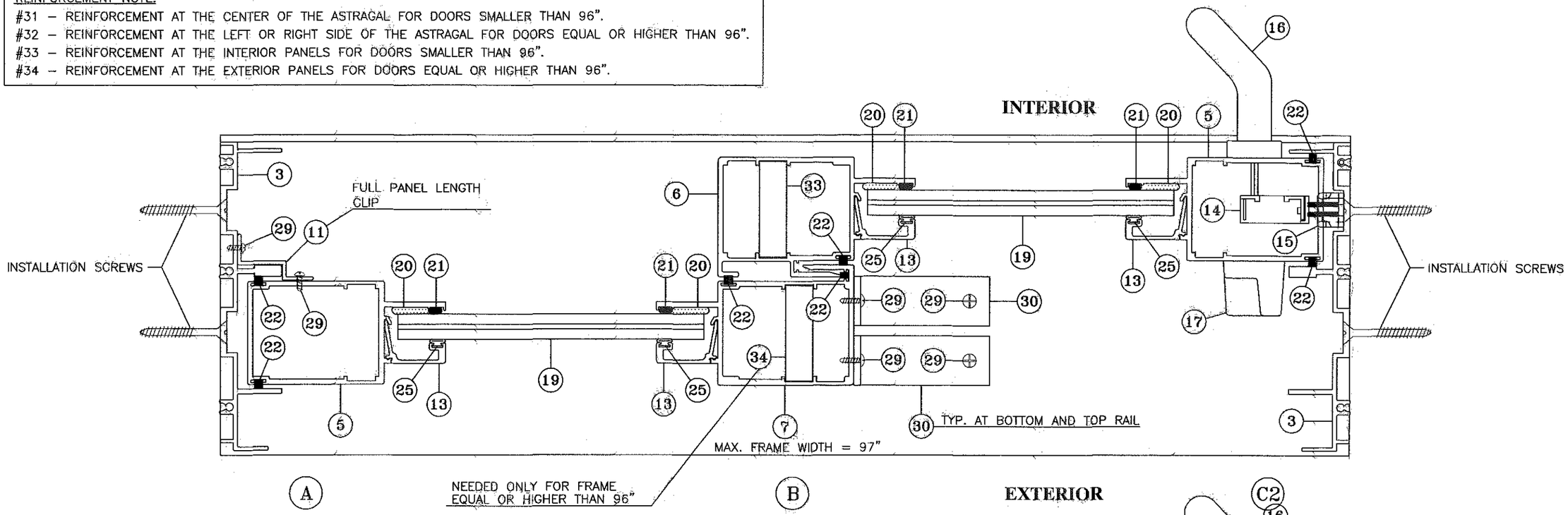

OX OR XO (2 PANELS - 2 TRACKS)

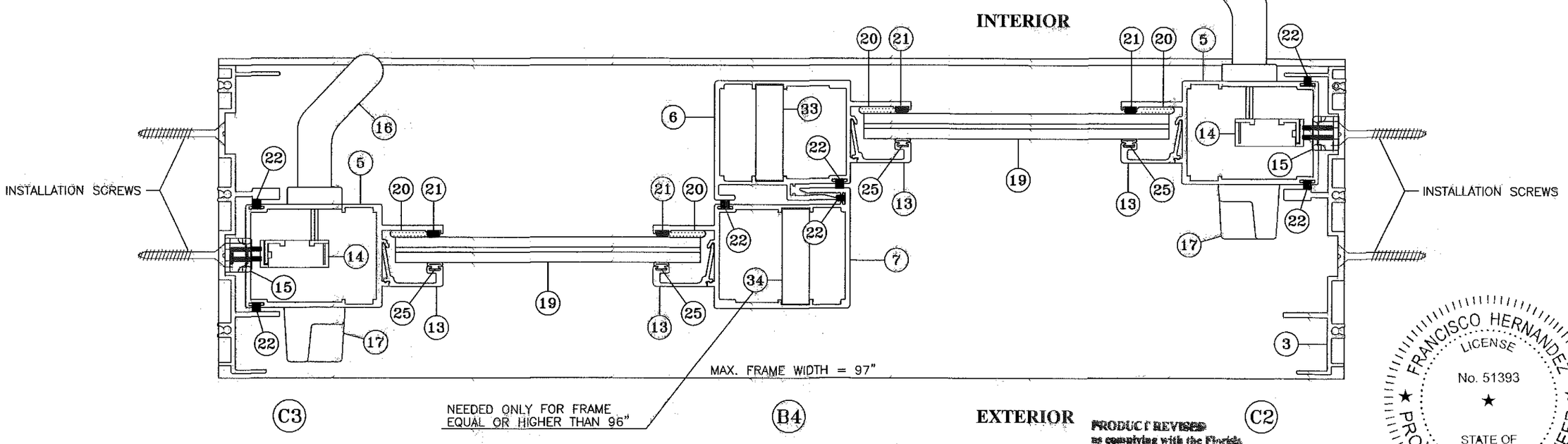

XX (2 PANELS - 2 TRACKS)

FOR INSTALLATION DETAILS SEE SHEETS 7 THRU 9

HORIZONTAL SECTIONS

PRODUCT REVISED
as complying with the Florida Building Code
Acceptance No 17-0525.05
Expiration Date 9/24/20
Building Product Control

FRANCISCO HERNANDEZ
LICENSE
No. 51393
STATE OF FLORIDA
PROFESSIONAL ENGINEER

10-11-17
FRANCISCO HERNANDEZ
FLORIDA PE # 51393

Sunshine Windows Manufacturing, Inc.
1745 W. 33rd Place
Hialeah, Florida 33012
Ph: (305)364-9952
Fax:(305)828-5118

SERIES 2009-9H
ALUMINUM SLIDING GLASS DOOR
LARGE MISSILE IMPACT RESISTANT

No	DATE	REVISION
1	10-11-17	REVISION IN COMPLIANCE WITH FBC 6TH EDITION (2017)

DRAWING No. SGD14
DATE: 09/05/14
SCALE: 6"=1'-0"

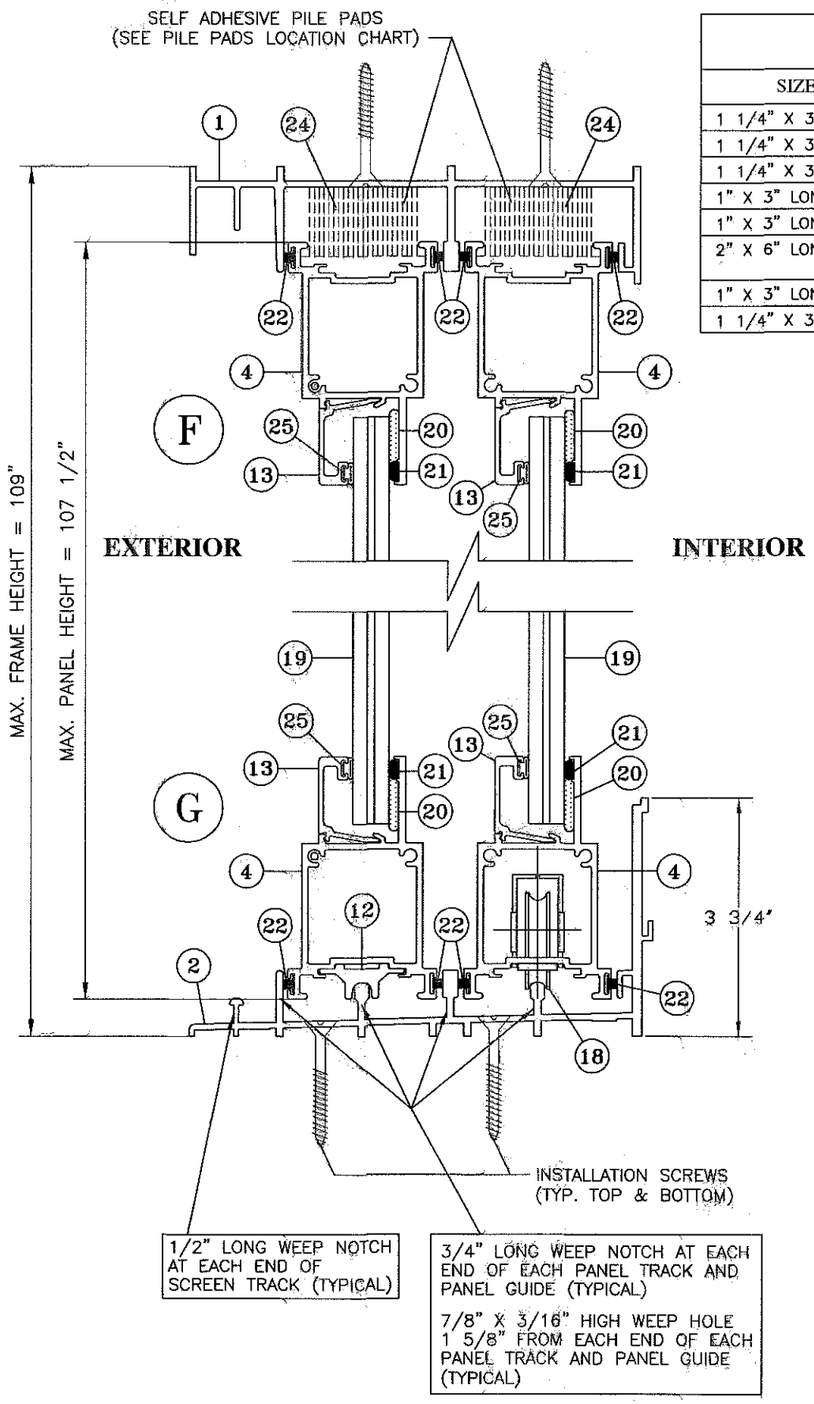

VERTICAL SECTION

FOR INSTALLATION DETAILS SEE SHEETS 7 THRU 9

PILE PADS LOCATION CHART

SIZE	LOCATION
1 1/4" X 3" LONG	EACH END OF MOVING PANELS TOP RAIL
1 1/4" X 3" LONG	RIGHT SIDE OF LEFT FIXED PANELS TOP RAIL
1 1/4" X 3" LONG	LEFT SIDE OF RIGHT FIXED PANELS TOP RAIL
1" X 3" LONG	RIGHT SIDE OF LEFT FIXED PANELS BOTTOM RAIL
1" X 3" LONG	LEFT SIDE OF RIGHT FIXED PANELS BOTTOM RAIL
2" X 6" LONG	FRAME HEAD AND SILL OF MOVING PANEL TRACK AT CENTER OF GLAZING UNIT
1" X 3" LONG	INSIDE THE FEMALE ASTRAGAL STILE CAVITY AT THE TOP
1 1/4" X 3" LONG	INSIDE THE FEMALE ASTRAGAL STILE CAVITY AT THE TOP

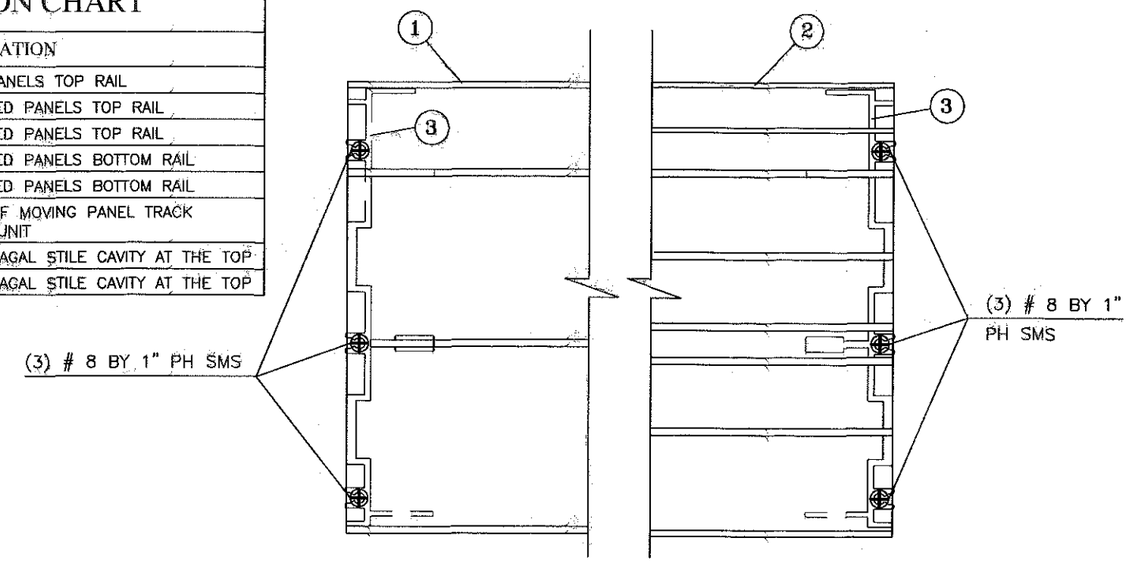

FRAME UPPER CORNER CONSTRUCTION DETAIL

FRAME BOTTOM CORNER CONSTRUCTION DETAIL

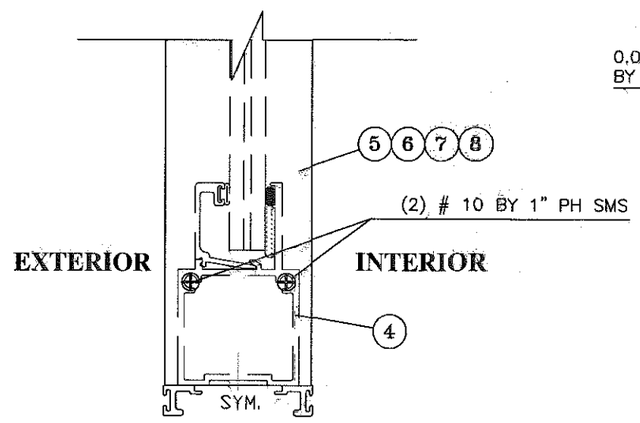

PANEL CORNERS CONSTRUCTION DETAIL

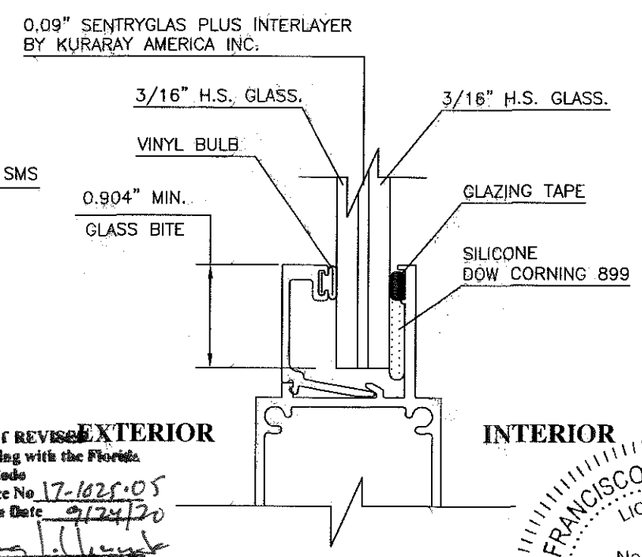

GLAZING DETAIL

PRODUCT REVISED as complying with the Florida Building Code
Acceptance No. 17-1025.05
Expiration Date 9/24/20
By [signature]
Building Code Product Control

GLAZING DETAIL AND FRAME & PANEL CORNER DETAILS

FRANCISCO HERNANDEZ LICENSE No. 51393 STATE OF FLORIDA PROFESSIONAL ENGINEER

10-11-17

FRANCISCO HERNANDEZ
FLORIDA PE # 51393

Sunshine Windows Manufacturing, Inc.
1745 W. 33rd Place
Hialeah, Florida 33012
Ph: (305)364-9952
Fax:(305)828-5118

SERIES 2009-9H
ALUMINUM SLIDING GLASS DOOR
LARGE MISSILE IMPACT RESISTANT

No	DATE	REVISION
1	10-11-17	REVISION IN COMPLIANCE WITH FBC 6TH EDITION (2017)

DRAWING No. SGD14
DATE: 09/05/14
SCALE: 6"=1'-0"

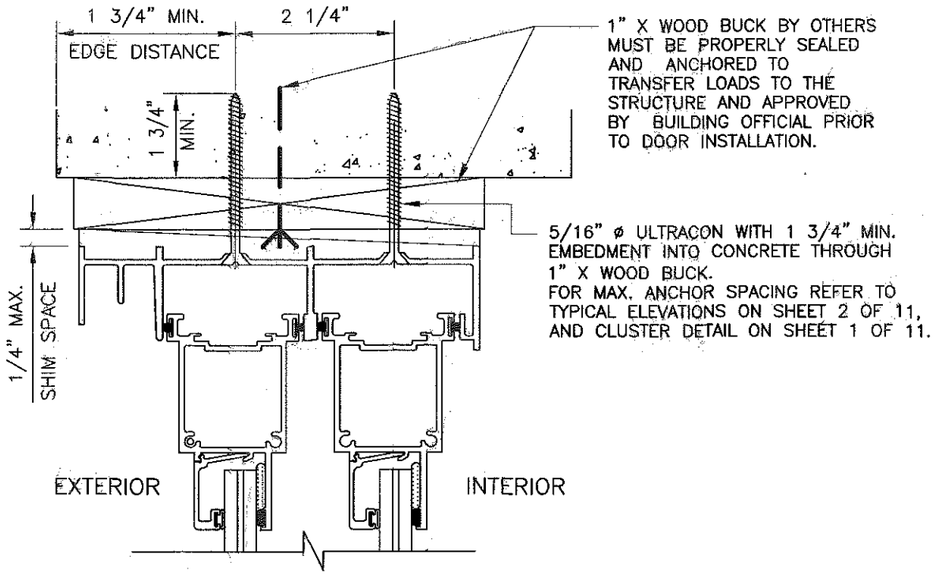

ATTACHMENT TO CONCRETE THROUGH 1" X WOOD BUCK

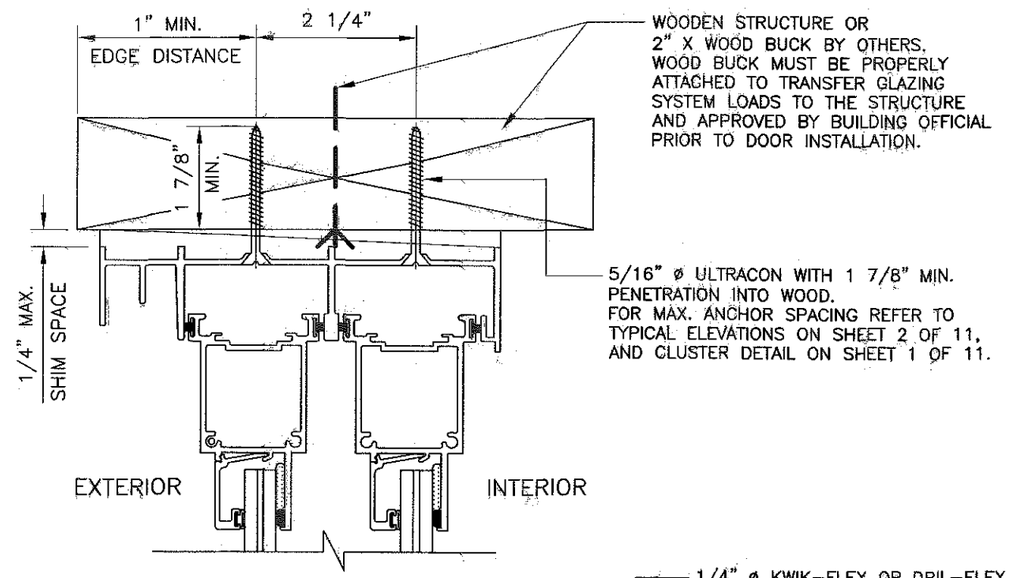

ATTACHMENT TO WOOD

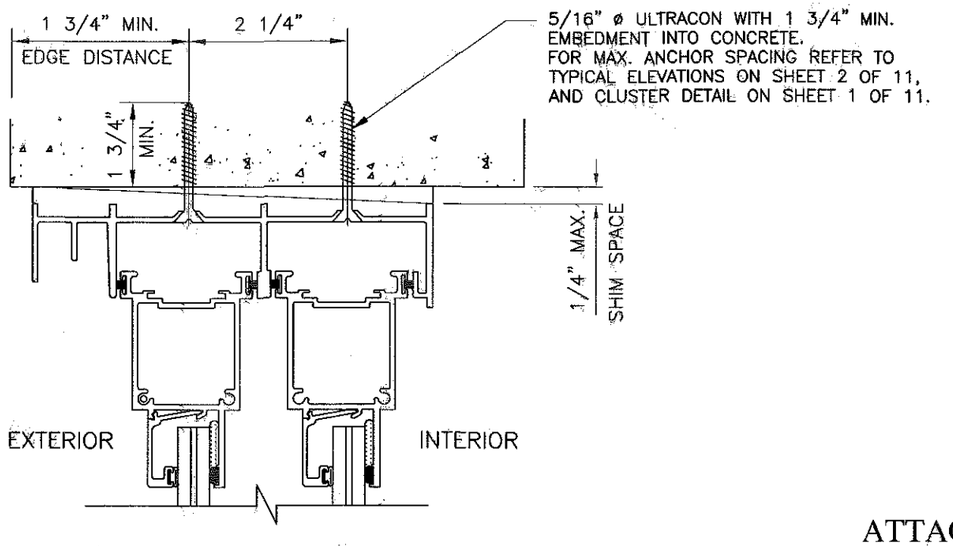

ATTACHMENT TO CONCRETE WITHOUT WOOD BUCKS

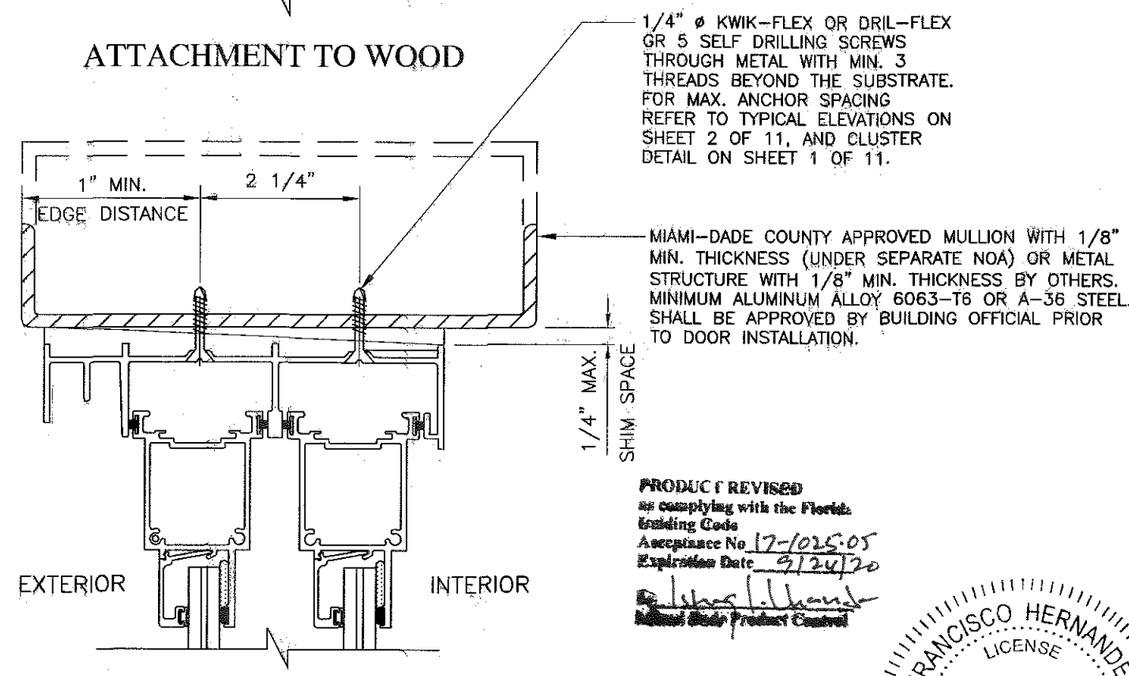

ATTACHMENT TO METAL STRUCTURE / MULLION

PRODUCT REVISED
as complying with the Florida Building Code
Acceptance No. 17-1025.05
Expiration Date 9/24/20
Building Code Product Control

FRANCISCO HERNANDEZ
LICENSE
No. 51393
STATE OF FLORIDA
PROFESSIONAL ENGINEER

10-11-17
FRANCISCO HERNANDEZ
FLORIDA PE # 51393

TYPICAL SECTIONS AT HEAD
ATTACHMENT TO DIFFERENT SUBSTRATES

Sunshine Windows Manufacturing, Inc.
1745 W. 33rd Place
Hialeah, Florida 33012
Ph: (305)364-9952
Fax:(305)828-5118

SERIES 2009-9H
ALUMINUM SLIDING GLASS DOOR
LARGE MISSILE IMPACT RESISTANT

No	DATE	REVISION
1	10-11-17	REVISION IN COMPLIANCE WITH FBC 6TH EDITION (2017)

DRAWING No. SGD14
DATE: 09/05/14
SCALE: 6"=1'-0"

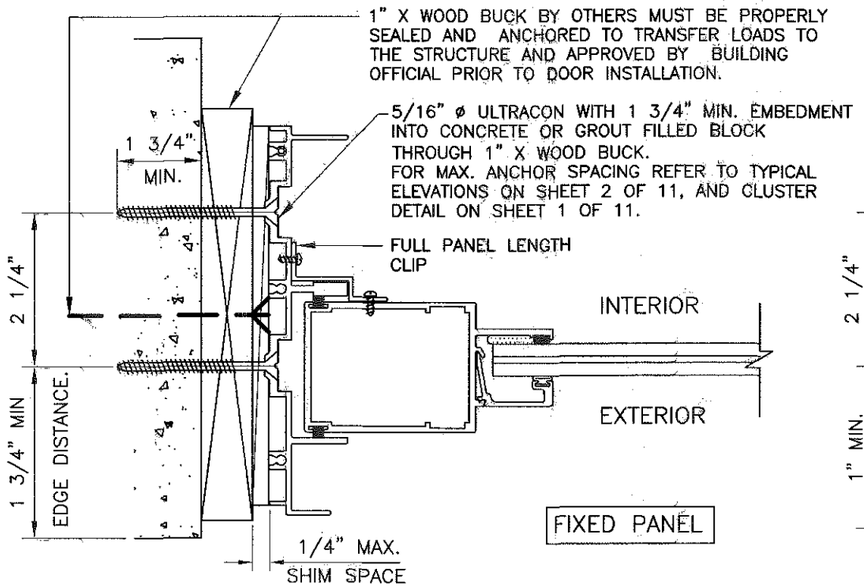

ATTACHMENT TO CONCRETE OR GROUT FILLED BLOCK THROUGH 1 X WOOD BUCK

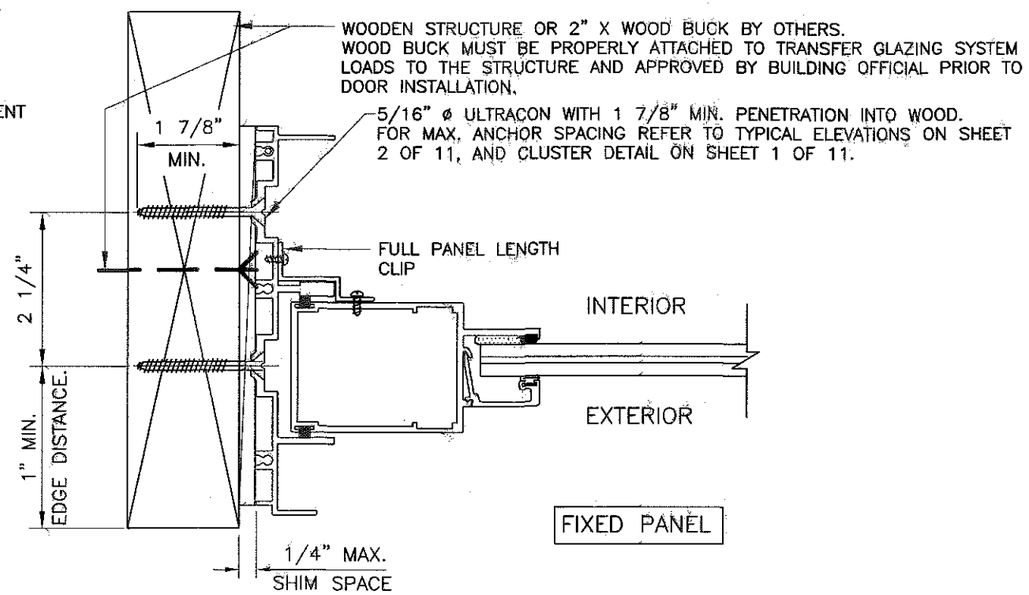

ATTACHMENT TO WOOD

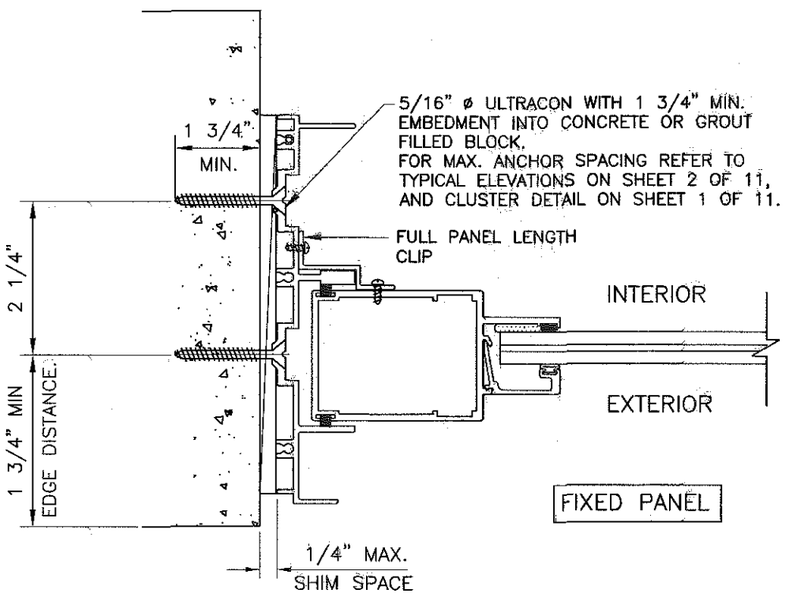

ATTACHMENT TO CONCRETE OR GROUT FILLED BLOCK

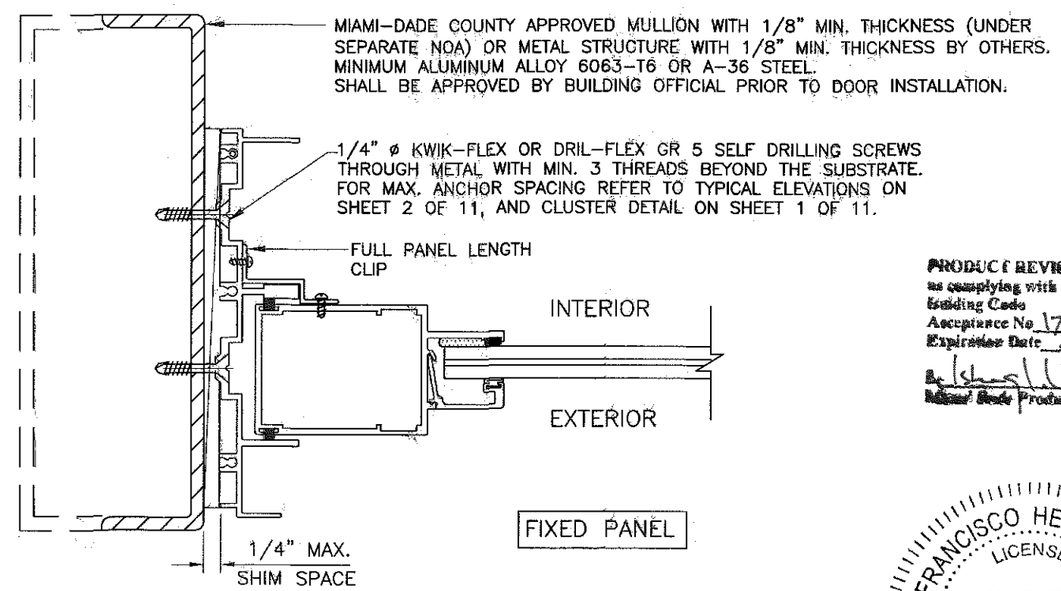

ATTACHMENT TO METAL STRUCTURE

TYPICAL SECTIONS AT JAMBS
ATTACHMENT TO DIFFERENT SUBSTRATES

PRODUCT REVISED
as complying with the Florida
Building Code
Acceptance No. 17-1025.05
Expiration Date 4/24/20
By [signature]
Miami-Dade Product Control

FRANCISCO HERNANDEZ
LICENSE
No. 51393
STATE OF FLORIDA
PROFESSIONAL ENGINEER

10-11-17

FRANCISCO HERNANDEZ
FLORIDA PE # 51393

Sunshine Windows Manufacturing, Inc.
1745 W. 33rd Place
Hialeah, Florida 33012
Ph: (305)364-9952
Fax:(305)828-5118

SERIES 2009-9H
ALUMINUM SLIDING GLASS DOOR
LARGE MISSILE IMPACT RESISTANT

No	DATE	REVISION
1	10-11-17	REVISION IN COMPLIANCE WITH FBC 6TH EDITION (2017)

DRAWING No.
SGD14
DATE: 09/05/14
SCALE: 6"=1'-0"

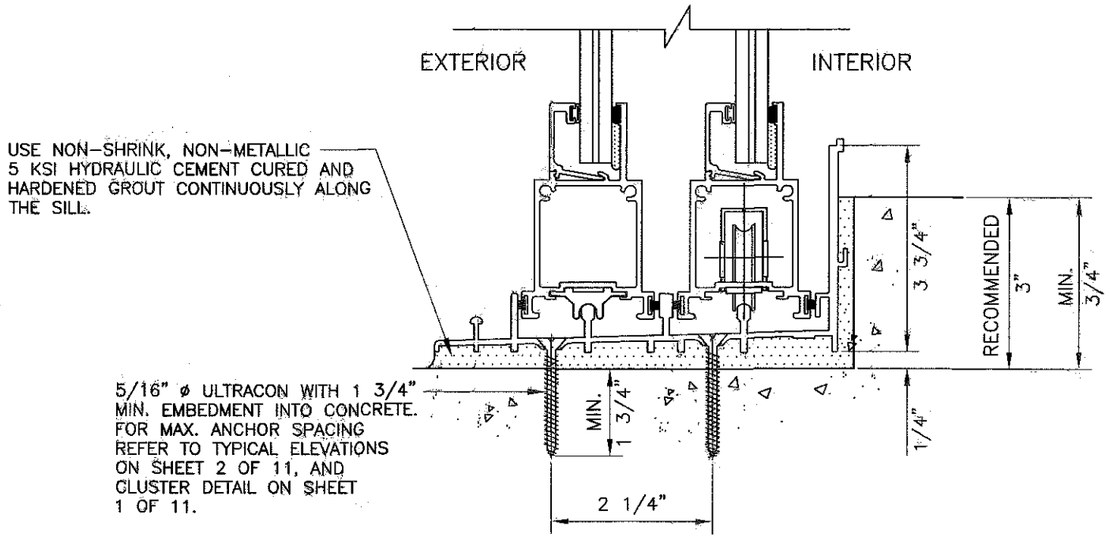

ATTACHMENT TO CONCRETE

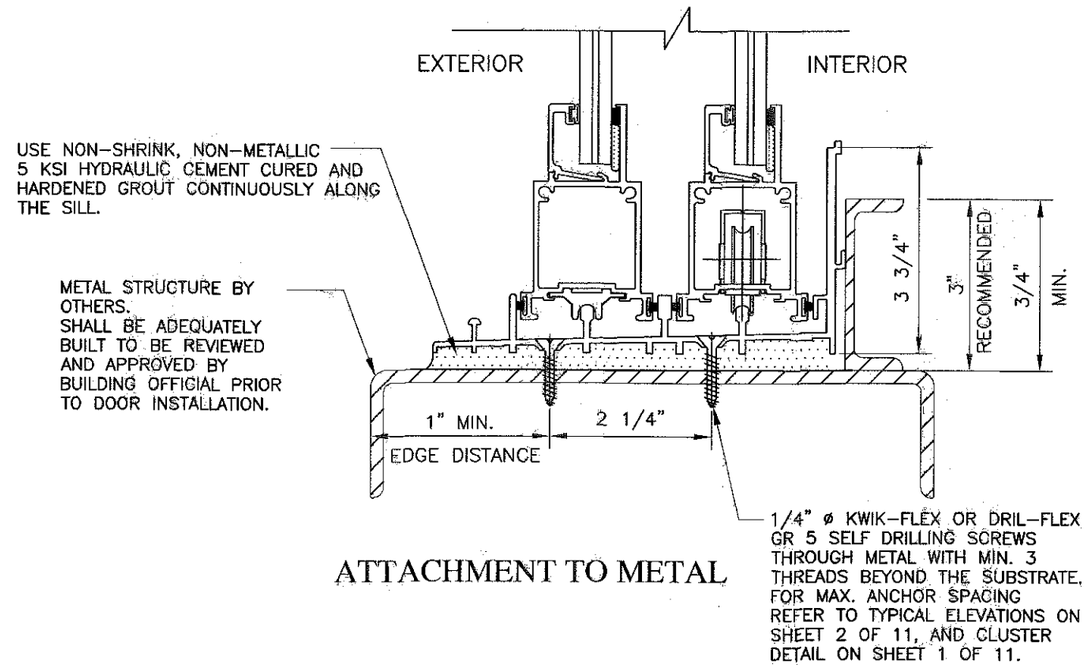

ATTACHMENT TO METAL

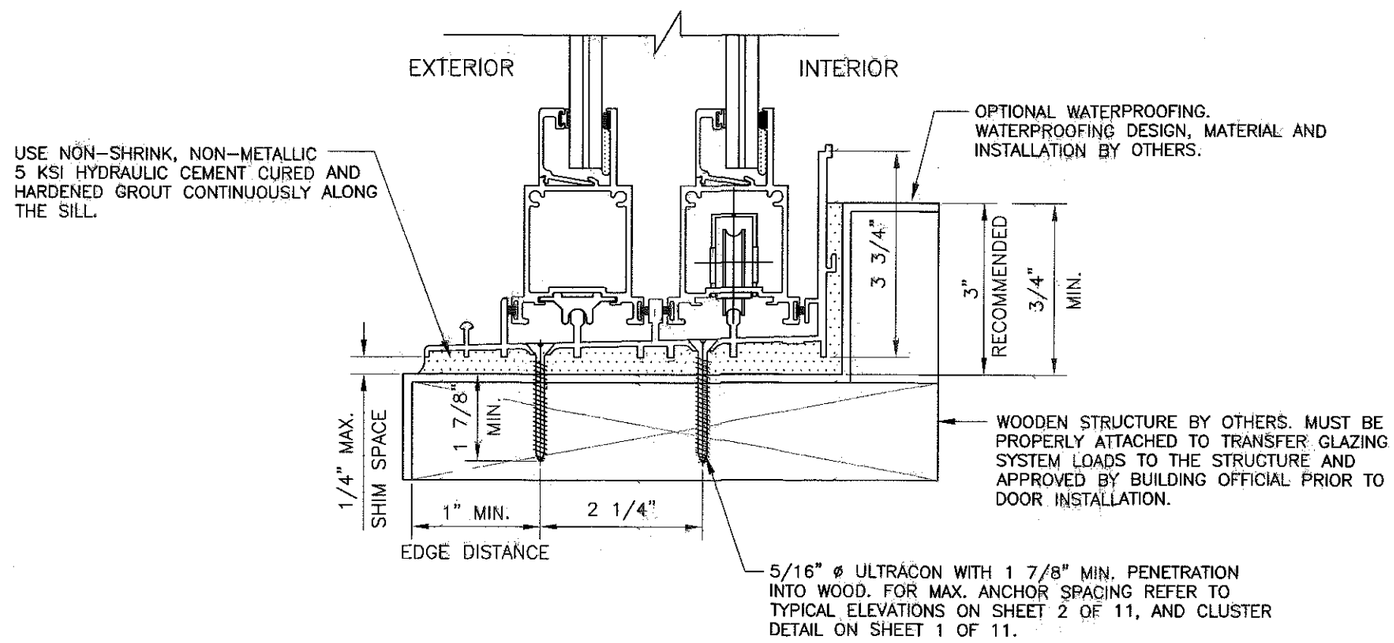

ATTACHMENT TO WOOD

TYPICAL SECTIONS AT SILL
ATTACHMENT TO DIFFERENT SUBSTRATES

PRODUCT REVISED
as complying with the Florida Building Code
Acceptance No. 17-1025.05
Expiration Date 4/24/20
By [signature]
Miami-Dade Product Control

FRANCISCO HERNANDEZ
LICENSE
No. 51393
STATE OF FLORIDA
PROFESSIONAL ENGINEER

10-11-17
FRANCISCO HERNANDEZ
FLORIDA PE # 51393

Sunshine Windows Manufacturing, Inc.
1745 W. 33rd Place
Hialeah, Florida 33012
Ph: (305)364-9952
Fax:(305)828-5118

SERIES 2009-9H
ALUMINUM SLIDING GLASS DOOR
LARGE MISSILE IMPACT RESISTANT

No	DATE	REVISION
1	10-11-17	REVISION IN COMPLIANCE WITH FBC 6TH EDITION (2017)

DRAWING No. SGD14
DATE: 09/05/14
SCALE: 6"=1'-0"

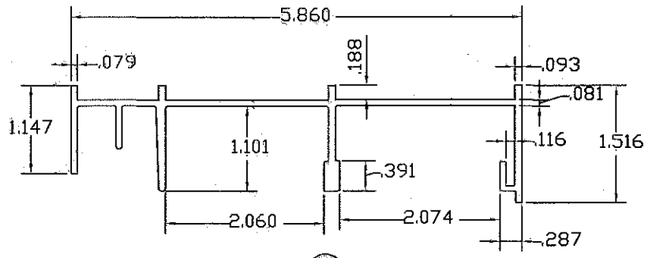

1

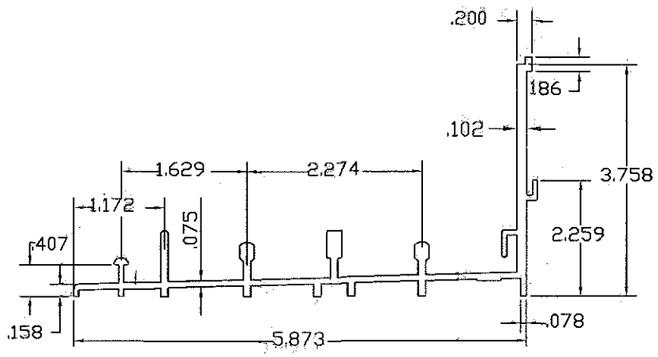

2

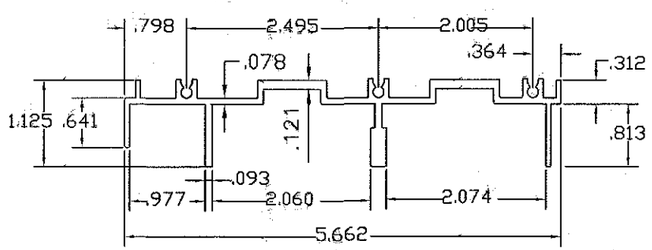

3

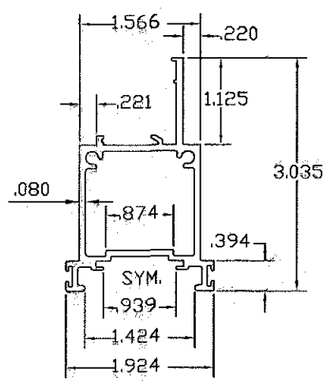

4

BILL OF MATERIALS

ITEM	PART No.	DESCRIPTION	NOTES
1	SSW-001	2 TRACK FRAME HEAD	6063-T6 ALUMINUM
2	SSW-002	2 TRACK FRAME SILL	6063-T6 ALUMINUM
3	SSW-003	2 TRACK FRAME JAMB	6063-T6 ALUMINUM
4	SSW-004	PANEL TOP & BOTTOM RAIL	6005-T6 ALUMINUM
5	SSW-005	PANEL LOCK/FIXED STILE	6005-T6 ALUMINUM
6	SSW-006	INTERLOCK STILE AT INTERIOR TRACK	6005-T6 ALUMINUM
7	SSW-007	INTERLOCK STILE AT EXTERIOR TRACK	6005-T6 ALUMINUM
8	SSW-008	ASTRAGAL STILE	6005-T6 ALUMINUM
9	SSW-009	ASTRAGAL LOCK ADAPTER	6005-T6 ALUMINUM
10	SSW-010	ASTRAGAL INTERNAL REINF. TUBE	6005-T6 ALUMINUM
11	SSW-011	FIXED PANEL JAMB CLIP	6063-T6 ALUMINUM
12	SSW-012	FIXED PANEL BOTTOM RAIL GUIDE	RIGID VINYL
13	SSW-014	GLAZING BEAD - 7/16"	6063-T6 ALUMINUM
14	597 SRS	MORTISE LOCK	AMESBURRY HARDWARE 597 SERIES
15	2315 SRS	MORTISE LOCK KEEPER	AMESBURRY HARDWARE 2315 SERIES
16	APOLLO SRS	LOCK INTERIOR HANDLE / PULL	AMESBURRY HARDWARE APOLLO SERIES
17	2940 SRS	LOCK EXTERIOR HANDLE / PULL	AMESBURRY HARDWARE 2940 SERIES
18	SR-2003	TANDEM ROLLER (S.S.)	DELTA INDUSTRIAL SYSTEMS
19	NOA 11-0624.02	7/16" IMPACT GLASS	3/16" H.S. + 0.09 SGP + 3/16" H.S.
20		SILICONE SEALANT	DOW CORNING 899
21	ZIALOC 750	1/8" X 1/4" DOUBLE SIDED TAPE	PE FOAM GLAZING TAPE
22	W44214NW000	WEATHERSTRIP	0.229 X 0.220 FIN SEAL PILE WITH INTEGRAL FIN
23	NOT USED		
24		INTERLOCK/ASTRAGAL PILE PAD	SELF ADHESIVE PILE PAD
25	FWI3002	VINYL BULB 3025	FPVC
26	1LY73	ASTRAGAL ADAPTER SCREWS	#10 X 1 3/4" P.H. S.M.S.
27	1LY63	FRAME ASSEMBLY SCREWS	#8 X 1" P.H. S.M.S.
28	1LY73	PANEL ASSEMBLY SCREWS	#10 X 1" P.H. S.M.S.
29	1LY69	FIXED PANEL CLIP SCREWS	#10 X 1 3/4" P.H. S.D.S.
30	GAS-33328B	FIXED PANEL ANGLE CLIP	3" X 3" X 1/8" ALUMINUM ANGLE
31		ASTRAGAL REINFORCEMENT BAR	0.453" X 2.487" ALUMINUM BAR
32		ASTRAGAL REINFORCEMENT BAR	0.453" X 2.487" ALUMINUM BAR
33		INTERLOCK REINFORCEMENT BAR	0.453" X 1.719" ALUMINUM BAR
34		INTERLOCK REINFORCEMENT BAR	0.453" X 1.719" ALUMINUM BAR

PRODUCT REVIEWED
as complying with the Florida Building Code
Acceptance No 17-1025.05
Expiration Date 9/24/20
Building Code Product Control

BILL OF MATERIALS AND PARTS DETAILS

FRANCISCO HERNANDEZ
LICENSE
No. 51393
STATE OF FLORIDA
PROFESSIONAL ENGINEER

10-11-17
FRANCISCO HERNANDEZ
FLORIDA PE # 51393

Sunshine Windows Manufacturing, Inc.
1745 W. 33rd Place
Hialeah, Florida 33012
Ph: (305)364-9952
Fax:(305)828-5118

SERIES 2009-9H
ALUMINUM SLIDING GLASS DOOR
LARGE MISSILE IMPACT RESISTANT

No	DATE	REVISION
1	10-11-17	REVISION IN COMPLIANCE WITH FBC 6TH EDITION (2017)

DRAWING No.
SGD14
DATE: 09/05/14
SCALE: 6"=1'-0"

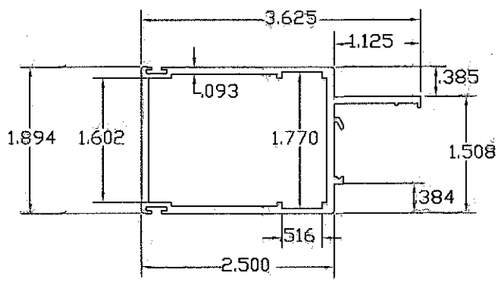

(5)

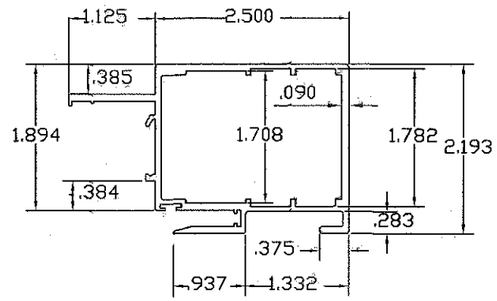

(6)

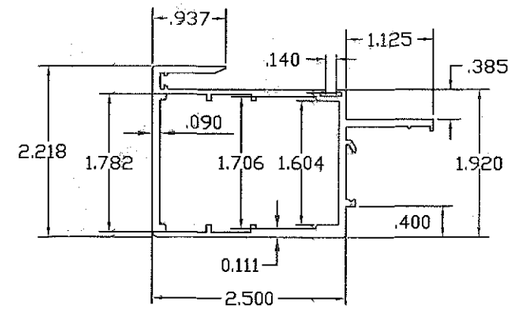

(7)

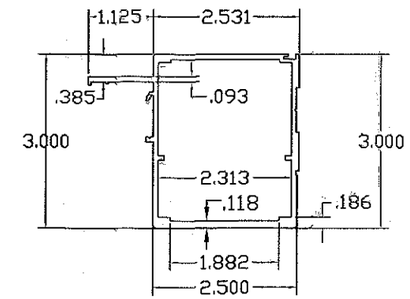

(8)

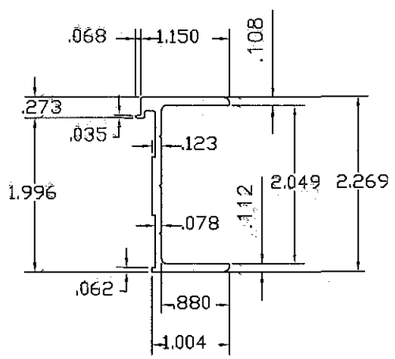

(9)

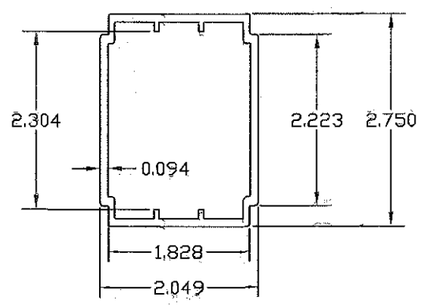

(10)

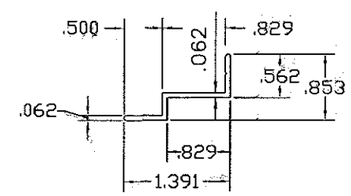

(11)

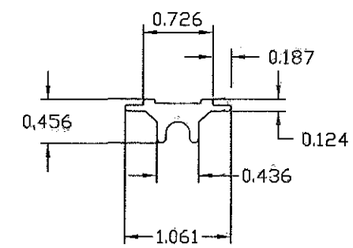

(12)

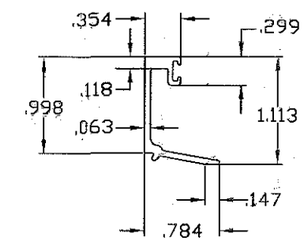

(13)

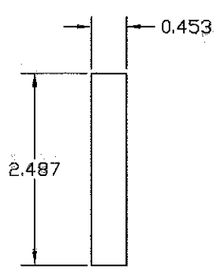

(31)

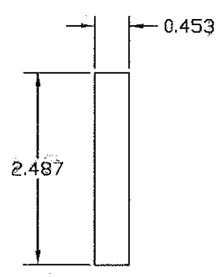

(32)

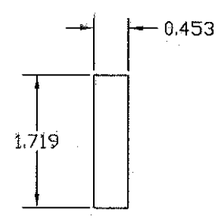

(33)

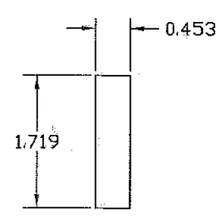

(34)

PARTS DETAILS

PRODUCT REVISED
as complying with the Florida
Building Code
Acceptance No 17-1025.05
Expiration Date SEP 24, 2020
By Ishwar J. Chandra
Miami-Dade Product Control

FRANCISCO HERNANDEZ
LICENSE
No. 51393
STATE OF FLORIDA
PROFESSIONAL ENGINEER

10-11-17
FRANCISCO HERNANDEZ
FLORIDA PE # 51393

Sunshine Windows Manufacturing, Inc.
1745 W. 33rd Place
Hialeah, Florida 33012
Ph: (305)364-9952
Fax:(305)828-5118

SERIES 2009-9H
ALUMINUM SLIDING GLASS DOOR
LARGE MISSILE IMPACT RESISTANT

No	DATE	REVISION
1	10-11-17	REVISION IN COMPLIANCE WITH FBC 6TH EDITION (2017)

DRAWING No. SGD14
DATE: 09/05/14
SCALE: 6"=1'-0"