MIAMI-DADE COUNTY
DEPARTMENT OF REGULATORY AND ECONOMIC RESOURCES (RER)
BOARD AND CODE ADMINISTRATION DIVISION

MIAMI-DADE COUNTY
PRODUCT CONTROL SECTION
11805 SW 26 Street, Room 208
T (786) 315-2590 F (786) 315-2599
www.miamidade.gov/economy

# NOTICE OF ACCEPTANCE (NOA)

**ES Windows, LLC**
**3550 NW 49th Street**
**Miami, FL 33142**

**SCOPE:**

This NOA is being issued under the applicable rules and regulations governing the use of construction materials. The documentation submitted has been reviewed and accepted by Miami-Dade County RER - Product Control Section to be used in Miami Dade County and other areas where allowed by the Authority Having Jurisdiction (AHJ).

This NOA shall not be valid after the expiration date stated below. The Miami-Dade County Product Control Section (In Miami Dade County) and/or the AHJ (in areas other than Miami Dade County) reserve the right to have this product or material tested for quality assurance purposes. If this product or material fails to perform in the accepted manner, the manufacturer will incur the expense of such testing and the AHJ may immediately revoke, modify, or suspend the use of such product or material within their jurisdiction. RER reserves the right to revoke this acceptance, if it is determined by Miami-Dade County Product Control Section that this product or material fails to meet the requirements of the applicable building code.

This product is approved as described herein, and has been designed to comply with the Florida Building Code, including the High Velocity Hurricane Zone.

**DESCRIPTION: Series "EL200" Aluminum Horizontal Rolling Window - L.M.I.**

**APPROVAL DOCUMENT:** Drawing No. **W16-86**, titled "ES-EL200 Horizontal Rolling Alum. Wdw. (L.M.I.)", sheets 1 through 11 of 11, dated 12/19/16, with revision B dated 09/27/17, prepared by Al-Farooq Corporation, signed and sealed by Javad Ahmad, P.E., bearing the Miami-Dade County Product Control Revision stamp with the Notice of Acceptance number and expiration date by the Miami-Dade County Product Control Section.

**MISSILE IMPACT RATING: Large and Small Missile Impact Resistant**

**LABELING:** Each unit shall bear a permanent label with the manufacturer's name or logo, **Baranquilla, Columbia, S.A.**, series, and the following statement: "Miami-Dade County Product Control Approved", unless otherwise noted herein.

**RENEWAL** of this NOA shall be considered after a renewal application has been filed and there has been no change in the applicable building code negatively affecting the performance of this product.

**TERMINATION** of this NOA will occur after the expiration date or if there has been a revision or change in the materials, use, and/or manufacture of the product or process. Misuse of this NOA as an endorsement of any product, for sales, advertising or any other purposes shall automatically terminate this NOA. Failure to comply with any section of this NOA shall be cause for termination and removal of NOA.

**ADVERTISEMENT:** The NOA number preceded by the words Miami-Dade County, Florida, and followed by the expiration date may be displayed in advertising literature. If any portion of the NOA is displayed, then it shall be done in its entirety.

**INSPECTION:** A copy of this entire NOA shall be provided to the user by the manufacturer or its distributors and shall be available for inspection at the job site at the request of the Building Official.

This NOA **revises #16-0617.04** and consists of this page 1 and evidence pages E-1, E-2 and E-3, as well as approval document mentioned above.

The submitted documentation was reviewed by **Jorge M. Plasencia, P.E.**

MIAMI-DADE COUNTY APPROVED

1/04/2018

## NOTICE OF ACCEPTANCE: EVIDENCE SUBMITTED

**1. EVIDENCE SUBMITTED UNDER PREVIOUS APPROVAL # 16-0617.04**

**A. DRAWINGS**

1. Manufacturer's die drawings and sections.
2. Drawing No. **W16-86**, titled "ES-EL200 Horizontal Rolling Window Alum. Wdw. (L.M.I.)", sheets 1 through 11 of 11, dated 12/19/16, with revision A dated 01/11/17, prepared by Al-Farooq Corporation, signed and sealed by Javad Ahmad, P.E.

**B. TESTS**

1. Test reports on: 1) Air Infiltration Test, per FBC, TAS 202-94
   2) Uniform Static Air Pressure Test, Loading per FBC, TAS 202-94
   3) Water Resistance Test, per FBC, TAS 202-94
   4) Forced Entry Test, per FBC, and TAS 202-94
   6) Large Missile Impact Test per FBC, TAS 201-94
   7) Cyclic Wind Pressure Loading per FBC, TAS 203-94

   along with marked-up drawings and installation diagram of an aluminum horizontal sliding window, prepared by Blackwater Testing, Inc., Test Report No. **BT-ESW-16-007**, dated 12/08/16, signed and sealed by Constantin Bortes, P.E.

**C. CALCULATIONS**

1. Anchor verification calculations and structural analysis, complying with **FBC-5th Edition (2014)**, dated 12/08/16, prepared by Al-Farooq Corporation, signed and sealed by Javad Ahmad, P.E.
2. Glazing complies with **ASTM E1300-09.**

**D. QUALITY ASSURANCE**

1. Miami-Dade Department of Regulatory and Economic Resources (RER)

**E. MATERIAL CERTIFICATIONS**

1. Notice of Acceptance No. **14-0916.10** issued to **Kuraray America, Inc.** for their **"Butacite® PVB Glass Interlayer"** dated 04/25/15, expiring on 12/11/16.
2. Notice of Acceptance No. **14-0916.11** issued to **Kuraray America, Inc.** for their "**Sentry Glass® (Clear and White) Glass Interlayer**" dated 06/25/15, expiring on 07/04/18.
3. Notice of Acceptance No. **15-1201.11** issued to **Eastman Chemical Co. (MA)** for their "**Saflex Clear and Color Glass Interlayers**" dated 03/17/16, expiring on 05/21/21.
4. Notice of Acceptance No. **14-0423.15** issued to **Eastman Chemical Co. (MA)** for their "**Saflex CP – Saflex and Saflex HP Composite Glass Interlayers with PET Core**" dated 06/19/14, expiring on 12/11/18.

**Jorge M. Plasencia, P.E.**
**Product Control Unit Supervisor**
**NOA No. 17-1114.06**
**Expiration Date: January 19, 2022**
**Approval Date: January 11, 2018**

## NOTICE OF ACCEPTANCE: EVIDENCE SUBMITTED

**F. STATEMENTS**

1. Statement letter of conformance, complying with **FBC-5th Edition (2014)**, dated 12/08/16, issued by Al-Farooq Corporation, signed and sealed by Javad Ahmad, P.E.
2. Statement letter of no financial interest, dated 12/08/16, issued by Al-Farooq Corporation, signed and sealed by Javad Ahmad, P.E.
3. Addendum letter, issued by Blackwater Testing for test report BT-ESW-16-007 dated 12/15/16.
4. Distributor Agreement, signed by Carlos Garcia and by Evelyn Daes.
5. Laboratory compliance statement for Test Report No. **BT-ESW-16-007**, issued by Blackwater Testing, Inc., dated 12/08/16, signed and sealed by Constantin Bortes, P.E.
6. Proposal No. **16-1228** issued by the Product Control Section, dated 11/16/16, signed by Manuel Perez, P.E.

**2. NEW EVIDENCE SUBMITTED**

**A. DRAWINGS**

1. Drawing No. **W16-86**, titled "ES-EL200 Horizontal Rolling Alum. Wdw. (L.M.I.)", sheets 1 through 11 of 11, dated 12/19/16, with revision B dated 09/27/17, prepared by Al-Farooq Corporation, signed and sealed by Javad Ahmad, P.E.

**B. TESTS**

1. None.

**C. CALCULATIONS**

1. None.

**D. QUALITY ASSURANCE**

1. Miami-Dade Department of Regulatory and Economic Resources (RER)

**E. MATERIAL CERTIFICATIONS**

1. Notice of Acceptance No. **16-1117.01** issued to **Kuraray America, Inc.** for their **"Trosifol® Ultraclear, Clear and Color PVB Glass Interlayers"** dated 01/19/17, expiring on 07/08/19.
2. Notice of Acceptance No. **17-0808.02** issued to **Kuraray America, Inc.** for their "**Sentry Glas® (Clear and White) Glass Interlayer**" dated 12/28/17, expiring on 07/04/23.
3. Notice of Acceptance No. **17-0712.05** issued to **Eastman Chemical Co. (MA)** for their "**Saflex Clear and Color Glass Interlayers**" dated 09/07/17, expiring on 05/21/21.

**Jorge M. Plasencia, P.E.**
**Product Control Unit Supervisor**
**NOA No. 17-1114.06**
**Expiration Date: January 19, 2022**
**Approval Date: January 11, 2018**

## NOTICE OF ACCEPTANCE: EVIDENCE SUBMITTED

**E. MATERIAL CERTIFICATIONS (continued)**

**4.** Notice of Acceptance No. **17-0712.03** issued to **Eastman Chemical Co. (MA)** for their "**Saflex CP – Saflex and Saflex HP Composite Glass Interlayers with PET Core**" dated 09/07/17, expiring on 12/11/18.

**F. STATEMENTS**

**1.** Statement letter of conformance to **FBC-5th Edition (2014)** and **FBC-6th Edition (2017)**, and of no financial interest, dated 09/25/17, issued by Al-Farooq Corporation, signed and sealed by Javad Ahmad, P.E.

**G. OTHER**

**1.** This NOA revises NOA #16-0617.04, expiring on 01/19/22.

**Jorge M. Plasencia, P.E.**
**Product Control Unit Supervisor**
**NOA No. 17-1114.06**
**Expiration Date: January 19, 2022**
**Approval Date: January 11, 2018**

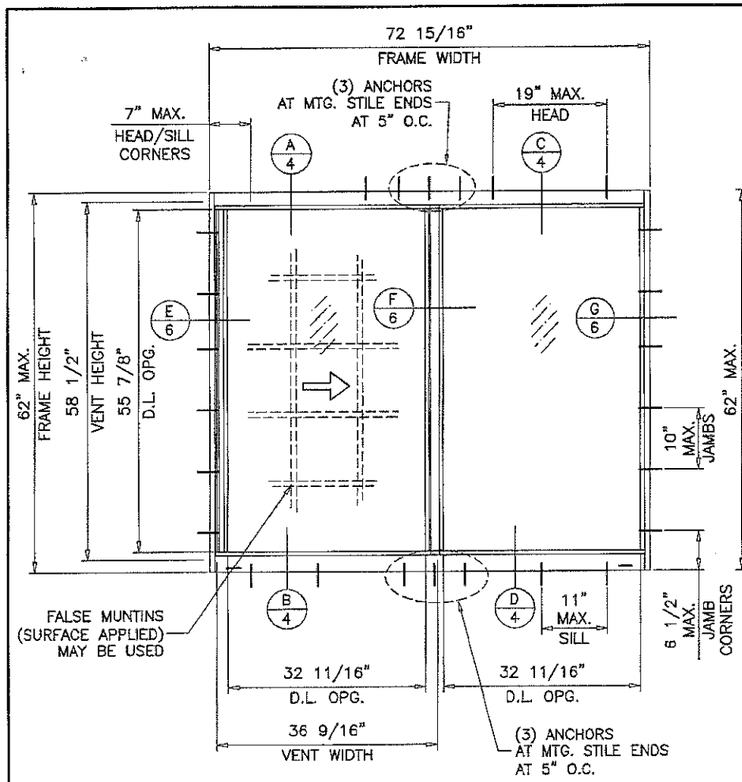


TYPICAL ELEVATION

FLANGE FRAMES

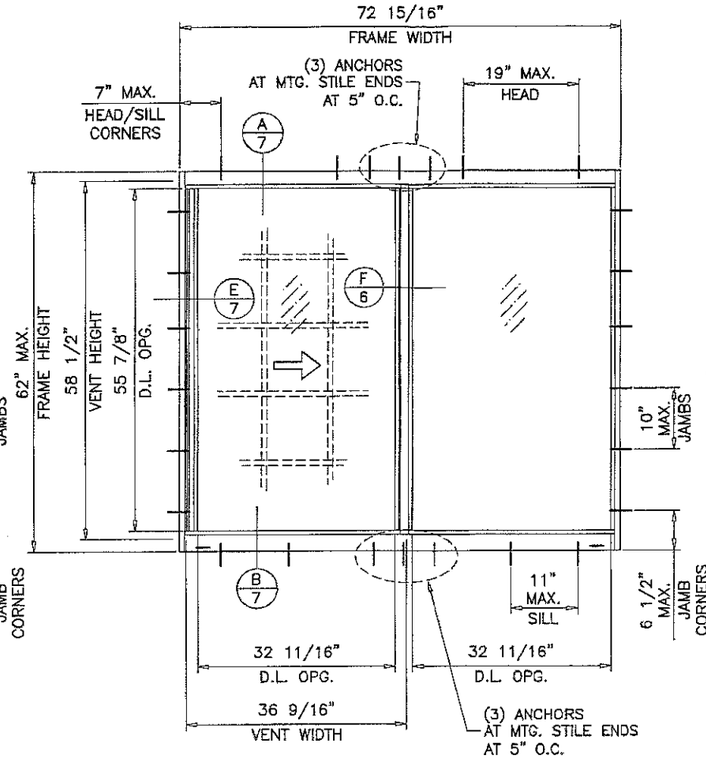


TYPICAL ELEVATION

FLANGE FRAMES WITH FLUSH ADAPTER

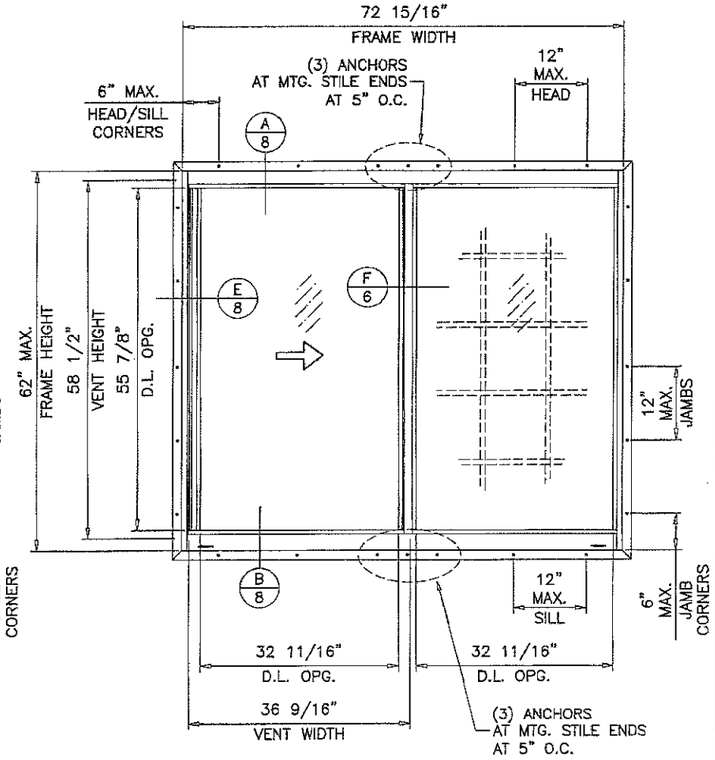


TYPICAL ELEVATION

FLANGE FRAMES WITH FIN ADAPTER

## ES-EL200
## HORIZONTAL ROLLING ALUMINUM WINDOW (L.M.I.)

APPROVAL APPLIES TO SINGLE UNITS OR SIDE BY SIDE COMBINATIONS OF H.R./H.R. OR HORIZONTAL ROLLING WITH OTHER WINDOW TYPES IN MODULES OF TWO OR MORE WINDOWS USING MIAMI-DADE COUNTY APPROVED MULLIONS IN BETWEEN.

LOWER DESIGN PRESSURE FROM WINDOWS OR MULLION NOA WILL APPLY TO ENTIRE SYSTEM.

THIS PRODUCT HAS BEEN DESIGNED AND TESTED TO COMPLY WITH THE REQUIREMENTS OF THE 2014 (5TH EDITION)/2017 (6TH EDITION) FLORIDA BUILDING CODE INCLUDING HIGH VELOCITY HURRICANE ZONE (HVHZ).

1BY OR 2BY WOOD BUCKS & BUCK FASTENERS BY OTHERS, MUST BE DESIGNED AND INSTALLED ADEQUATELY TO TRANSFER APPLIED PRODUCT LOADS TO THE BUILDING STRUCTURE.

ANCHORS SHALL BE CORROSION RESISTANT, SPACED AS SHOWN ON DETAILS AND INSTALLED PER MANUF'S INSTRUCTIONS. SPECIFIED EMBEDMENT TO BASE MATERIAL SHALL BE BEYOND WALL DRESSING OR STUCCO.

A LOAD DURATION INCREASE IS USED IN DESIGN OF ANCHORS INTO WOOD ONLY.

ALL SHIMS TO BE HIGH IMPACT, NON-METALLIC AND NON-COMPRESSIBLE.

MATERIALS INCLUDING BUT NOT LIMITED TO STEEL/METAL SCREWS, THAT COME INTO CONTACT WITH OTHER DISSIMILAR MATERIALS SHALL MEET THE REQUIREMENTS OF THE 2014/2017 FLORIDA BLDG. CODE & ADOPTED STANDARDS.

THIS PRODUCT APPROVAL IS GENERIC AND DOES NOT PROVIDE INFORMATION FOR A SITE SPECIFIC PROJECT, i.e. LIFE SAFETY OF THIS PRODUCT, ADEQUACY OF STRUCTURE RECEIVING THIS PRODUCT AND SEALING AROUND OPENING FOR WATER INFILTRATION RESISTANCE ETC.
CONDITIONS NOT SHOWN IN THIS DRAWING ARE TO BE ANALYZED SEPARATELY, AND TO BE REVIEWED BY BUILDING OFFICIAL.

MAXIMUM DESIGN LOAD RATING = + 65.0 PSF
(FOR SIZES SHOWN ABOVE OR SMALLER) − 65.0 PSF
MTG. STILES WITHOUT REINFORCING

MAXIMUM DESIGN LOAD RATING = + 80.0 PSF
(FOR SIZES SHOWN ABOVE OR SMALLER) − 90.0 PSF
MTG. STILES WITH REINFORCING

OPERATING VENTS CAN BE 1/4 TO 1/3 OF WINDOW WIDTH MAX. D.L. OPG. FOR FIXED LITE NOT TO EXCEED 12.7 SQ. FT.

FOR ALTERNATE SIZE UNITS MAX. FRAME AREA OF WINDOW NOT TO EXCEED TESTED FRAME AREA OF 31.46 SQ. FT.

THESE WINDOWS ARE RATED FOR LARGE & SMALL MISSILE IMPACT. SHUTTERS ARE NOT REQUIRED.

**PRODUCT REVISED**
**as complying with the Florida Building Code**
**NOA-No. 17-1114.06**
**Expiration Date 01/19/2022**
**By**
**Miami-Dade Product Control**

SEP 29 2017

JAVAD AHMAD
LICENSE
No. 70592
STATE OF FLORIDA
PROFESSIONAL ENGINEER


**AL-FAROOQ CORPORATION**
ENGINEERS & PRODUCT DEVELOPMENT
9360 SUNSET DRIVE, SUITE 220
MIAMI, FLORIDA 33173 (C.A.N. 3538)
TEL. (305) 264-8100 FAX. (305) 262-6978


COMP-ANL\W16-86ES

ES-EL200 HORIZONTAL ROLLING ALUM. WDW. (L.M.I.)


E.S. WINDOWS, LLC
3550 N.W. 49 STREET
MIAMI, FL. 33142
TEL. (305) 638-5151 FAX. (305) 638-5158


revisions:

| no | date | by | description |
|---|---|---|---|
| A | 01.11.17 | | NO CHANGE THIS SHEET |
| B | 09.27.17 | | UPDATED TO 2017 FBC |

date: 12-19-16
scale: 1/2"=1'-0"
dr. by: TARIQ
chk. by:

drawing no. W16-86

sheet 1 of 11

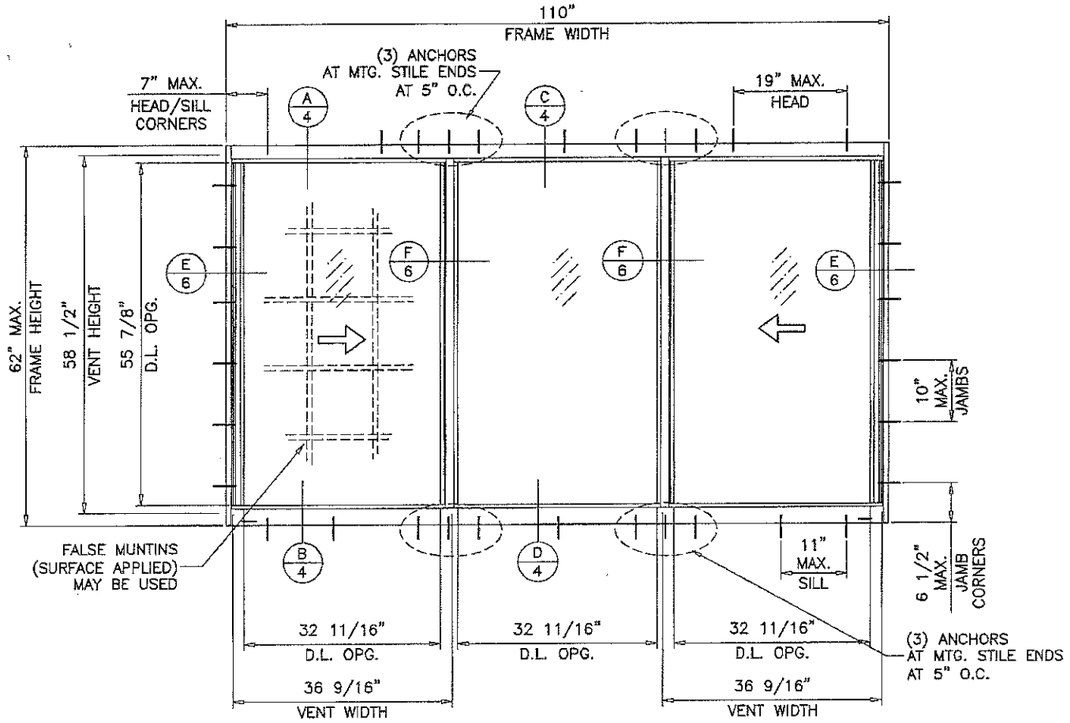


TYPICAL ELEVATION

FLANGE FRAMES

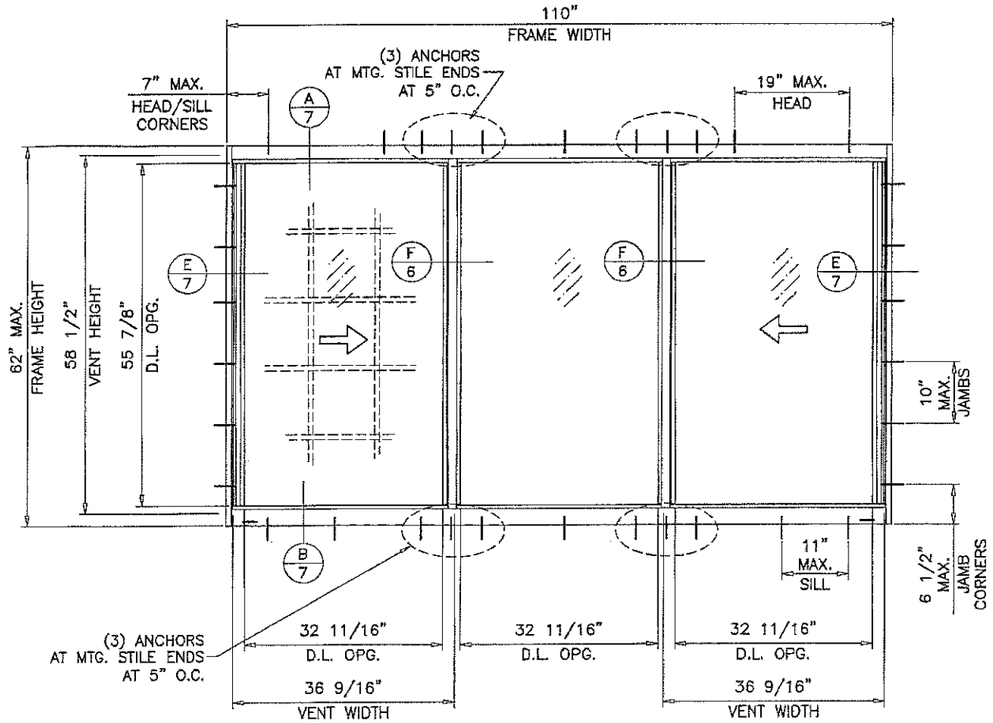


TYPICAL ELEVATION

FLANGE FRAMES WITH FLUSH ADAPTER

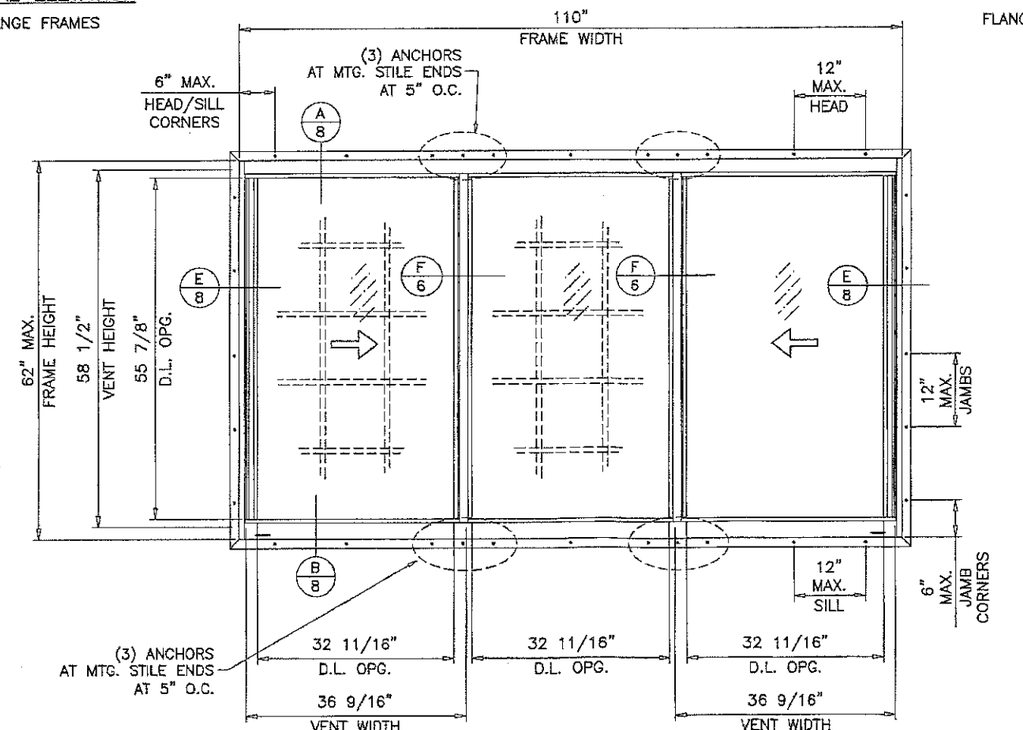


TYPICAL ELEVATION

FLANGE FRAMES WITH FIN ADAPTER

| | |
|---|---|
| MAXIMUM DESIGN LOAD RATING | = + 65.0 PSF |
| (FOR SIZES SHOWN ABOVE OR SMALLER) | − 65.0 PSF |
| MTG. STILES WITHOUT REINFORCING | |

| | |
|---|---|
| MAXIMUM DESIGN LOAD RATING | = + 80.0 PSF |
| (FOR SIZES SHOWN ABOVE OR SMALLER) | − 90.0 PSF |
| MTG. STILES WITH REINFORCING | |

OPERATING VENTS CAN BE 1/4 TO 1/3 OF WINDOW WIDTH
MAX. D.L. OPG. FOR FIXED LITE NOT TO EXCEED 12.7 SQ. FT.

FOR ALTERNATE SIZE UNITS MAX. FRAME AREA OF WINDOW
NOT TO EXCEED TESTED FRAME AREA OF 47.36 SQ. FT.

**PRODUCT REVISED**
**as complying with the Florida Building Code**
**NOA-No. 17-1114.06**
**Expiration Date 01/19/2022**
**By**
**Miami-Dade Product Control**

SEP 29 2017

JAVAD AHMAD
LICENSE
No. 70592
STATE OF FLORIDA
PROFESSIONAL ENGINEER


**AL-FAROOQ CORPORATION**
ENGINEERS & PRODUCT DEVELOPMENT
9360 SUNSET DRIVE, SUITE 220
MIAMI, FLORIDA 33173 (C.A.N. 3538)
TEL. (305) 264-8100 FAX. (305) 262-6978


COMP-ANL\W16-86ES

ES-EL200 HORIZONTAL ROLLING ALUM. WDW. (L.M.I.)

E.S. WINDOWS, LLC
3550 N.W. 49 STREET
MIAMI, FL. 33142
TEL. (305) 638-5151 FAX. (305) 638-5158

revisions:

| no | date | by | description |
|---|---|---|---|
| A | 01.11.17 | | NO CHANGE THIS SHEET |
| B | 09.27.17 | | NO CHANGE THIS SHEET |

date: 12-19-16
scale: 1/2"=1'-0"
dr. by: TARIQ
chk. by:

drawing no.
W16-86

sheet 2 of 11

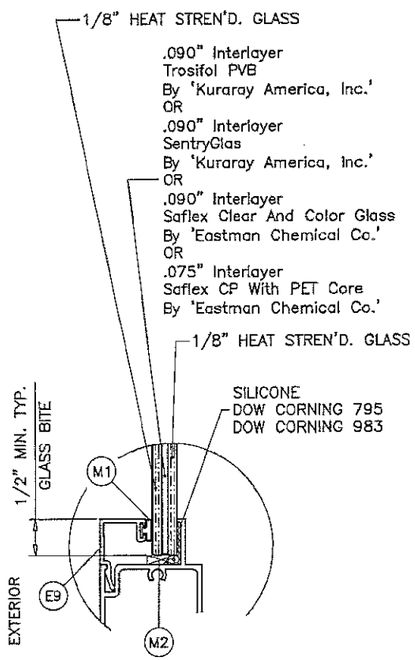


GLASS TYPE '1'
5/16" OVERALL LAM. GLASS

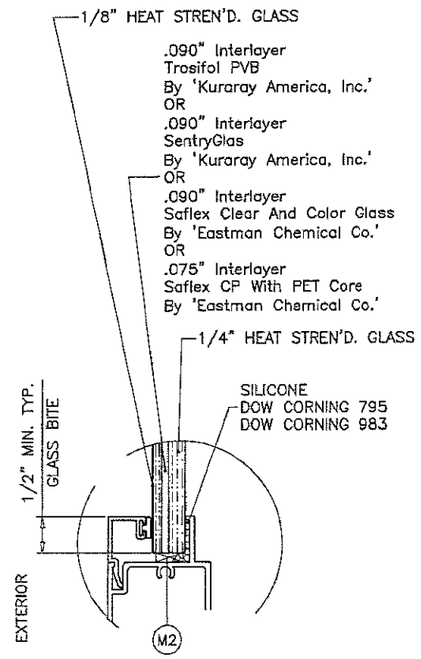


GLASS TYPE '2'
7/16" OVERALL LAM. GLASS

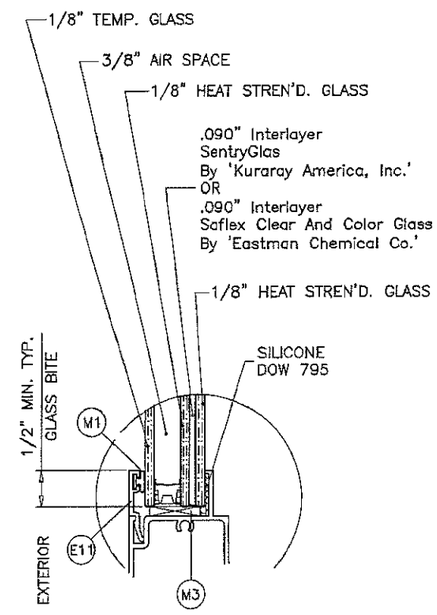


GLASS TYPE '1i'
7/8" OVERALL INSUL. LAM. GLASS

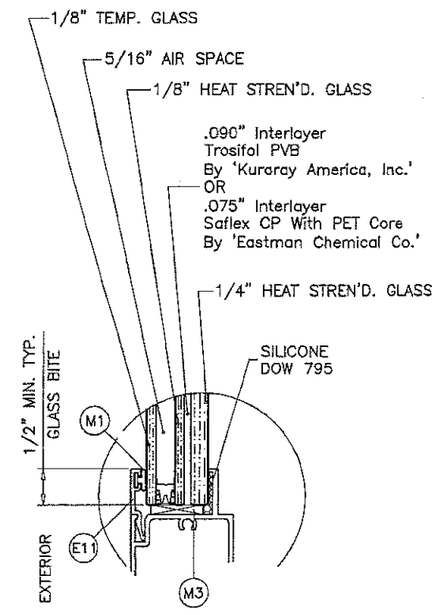


GLASS TYPE '2i'
7/8" OVERALL INSUL. LAM. GLASS

## GLAZING OPTIONS

**PRODUCT REVISED**
**as complying with the Florida Building Code**
**NOA-No. 17-1114.06**
**Expiration Date 01/19/2022**
**By**
**Miami-Dade Product Control**

NOTE:
GLASS CAPACITIES ARE
BASED ON ASTM E1300-09 (3 SEC. GUSTS)
AND FLORIDA BUILDING COMMISSION
DECLARATORY STATEMENT DCA05-DEC-219

5/16" & 3/8" AIR SPACE CONSISTING OF:
SPACER:
'HELIMA' LOW PROFILE ALUMINUM SPACER
BY 'LINGERMANN GMBH'
AROUND THE PERIMETER OF THE GLASS.
PERIMETER SEALANT:
SILICONE
DOW CORNING 791
GE 2000

SEP 29 2017

JAVAD AHMAD
LICENSE
No. 70592
STATE OF FLORIDA
PROFESSIONAL ENGINEER


**AL-FAROOQ CORPORATION**
ENGINEERS & PRODUCT DEVELOPMENT
9360 SUNSET DRIVE, SUITE 220
MIAMI, FLORIDA 33173 (C.A.N. 3638)
TEL. (305) 264-8100 FAX. (305) 262-6978


COMP-ANL\W16-86ES

ES-EL200 HORIZONTAL ROLLING ALUM. WDW. (L.M.I.)

E.S. WINDOWS, LLC
3550 N.W. 49 STREET
MIAMI, FL. 33142
TEL. (305) 638-5151 FAX. (305) 638-5158

revisions:

| no | date | by | description |
|---|---|---|---|
| A | 01.11.17 | | REV. PER RER COMMENTS |
| B | 09.27.17 | | UPDATED TO 2017 FBC |

date: 12-19-16
scale: 1/2" = 1"
dr. by: TARIQ
chk. by:

drawing no.
W16-86

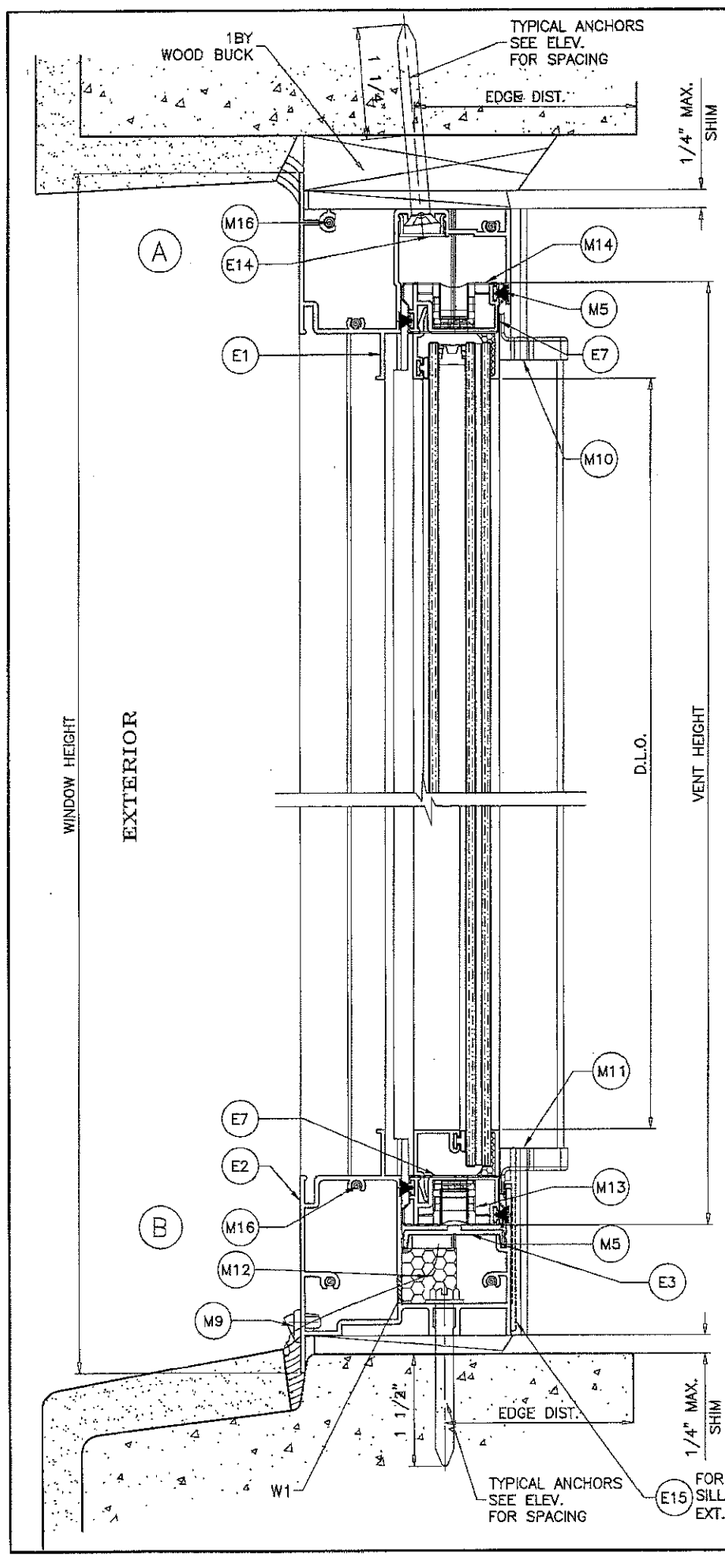


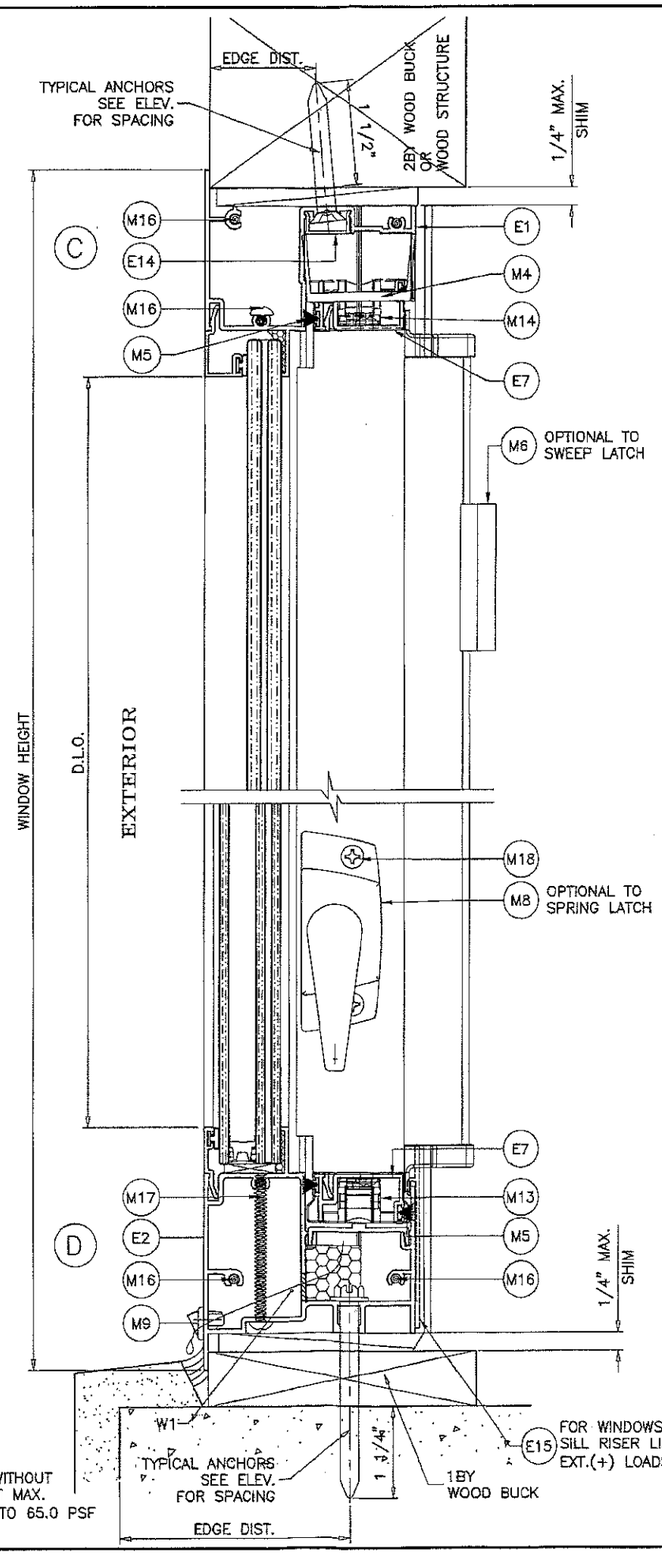


## WEEPHOLES:

W1 = 1-1/2" X 5/16" WEEPHOLES AT 5-1/2" FROM EACH END

**PRODUCT REVISED**
**as complying with the Florida Building Code**
**NOA-No. 17-1114.06**
**Expiration Date 01/19/2022**
**By**
**Miami-Dade Product Control**

JAVAD AHMAD
LICENSE
No. 70592
STATE OF FLORIDA
PROFESSIONAL ENGINEER

SEP 29 2017

**AL-FAROOQ CORPORATION**
ENGINEERS & PRODUCT DEVELOPMENT
9360 SUNSET DRIVE, SUITE 220
MIAMI, FLORIDA 33173 (C.A.N. 3538)
TEL. (305) 264-8100 FAX. (305) 262-6978
COMP-ANL\W16-86ES

ES-EL200 HORIZONTAL ROLLING ALUM. WDW. (L.M.I.)

E.S. WINDOWS, LLC
3550 N.W. 49 STREET
MIAMI, FL. 33142
TEL. (305) 638-5151 FAX. (305) 638-5158

revisions:

| no | date | by | description |
|---|---|---|---|
| A | 01.11.17 | | NO CHANGE THIS SHEET |
| B | 09.27.17 | | NO CHANGE THIS SHEET |

date: 12-19-16
scale: 1/2" = 1"
dr. by: TARIQ
chk. by:

drawing no.
W16-86

sheet 4 of 11

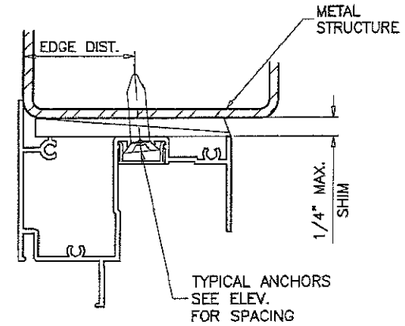


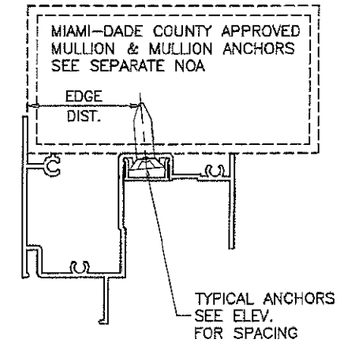


WOOD BUCKS AND METAL STRUCTURE NOT BY E.S. WINDOWS MUST SUSTAIN LOADS IMPOSED BY GLAZING SYSTEM AND TRANSFER THEM TO THE BUILDING STRUCTURE.

TYPICAL ANCHORS: SEE ELEV. FOR SPACING

1/4" DIA. ULTRACON BY 'ELCO' (Fu=177 KSI, Fy=155 KSI)

INTO 2BY WOOD BUCKS OR WOOD STRUCTURES
1-1/2" MIN. PENETRATION INTO WOOD (HEAD/SILL/JAMBS)

THRU 1BY BUCKS INTO CONC. OR BLOCKS
1-1/4" MIN. EMBED INTO CONCRETE (HEAD/SILL/JAMBS)
1-1/4" MIN. EMBED INTO BLOCKS (JAMBS)

DIRECTLY INTO CONCRETE OR BLOCKS
1-1/2" MIN. EMBED INTO CONCRETE (HEAD/SILL/JAMBS)
1-1/4" MIN. EMBED INTO BLOCKS (JAMBS)

1/4" DIA. TEKS OR SELF DRILLING SCREWS (GRADE 5 CRS)

INTO MIAMI-DADE COUNTY APPROVED MULLIONS
OR
INTO METAL STRUCTURES (HEAD/SILL/JAMBS)
(3) THREADS MIN. PENETRATION BEYOND SUBSTRATE
ALUMINUM: 1/8" THK. MIN. (6063-T5 MIN.)
STEEL: 1/8" THK. MIN. (Fy = 36 KSI MIN.)
(STEEL IN CONTACT WITH ALUMINUM TO BE PLATED OR PAINTED)

TYPICAL EDGE DISTANCE

INTO CONCRETE AND MASONRY = 2-1/2" MIN.
INTO WOOD STRUCTURE = 1" MIN.
INTO METAL STRUCTURE = 3/4" MIN.

WOOD AT HEAD, SILL OR JAMBS SG = 0.55 MIN.
CONCRETE AT HEAD, SILL OR JAMBS f'c = 3000 PSI MIN.
C-90 HOLLOW/FILLED BLOCK AT JAMBS f'm = 2000 PSI MIN.

**PRODUCT REVISED**
**as complying with the Florida Building Code**
**NOA-No. 17-1114.06**
**Expiration Date 01/19/2022**
**By**
**Miami-Dade Product Control**

SEP 29 2017

JAVAD AHMAD
LICENSE
No. 70592
STATE OF FLORIDA
PROFESSIONAL ENGINEER


**AL-FAROOQ CORPORATION**
ENGINEERS & PRODUCT DEVELOPMENT
9360 SUNSET DRIVE, SUITE 220
MIAMI, FLORIDA 33173 (C.A.N. 3538)
TEL. (305) 264-8100 FAX. (305) 262-6978


COMP-ANL\W16-86ES

ES-EL200 HORIZONTAL ROLLING ALUM. WDW. (L.M.I.)

E.S. WINDOWS, LLC
3550 N.W. 49 STREET
MIAMI, FL. 33142
TEL. (305) 638-5151 FAX. (305) 638-5158

revisions:

| no | date | by | description |
|---|---|---|---|
| A | 01.11.17 | | NO CHANGE THIS SHEET |
| B | 09.27.17 | | UPDATED TO 2017 FBC |

date: 12-19-16
scale: 1/2" = 1"
dr. by: TARIQ
chk. by:

drawing no.
W16-86

sheet 5 of 11

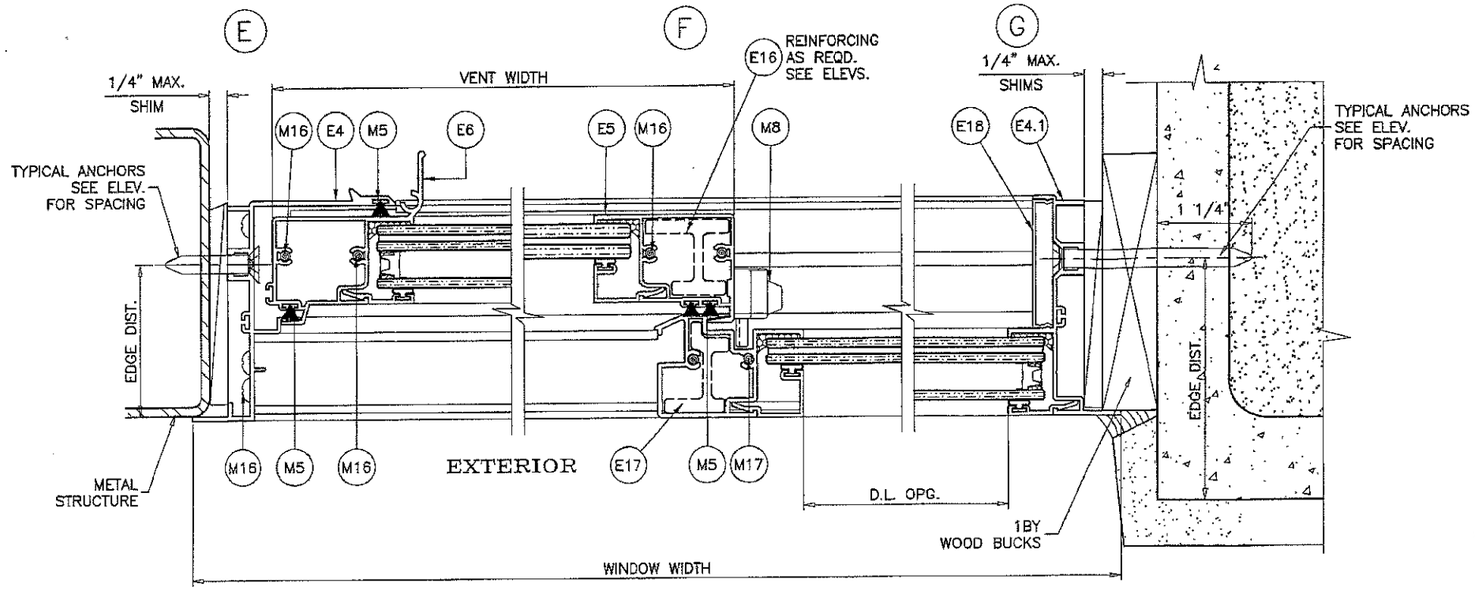


XO LAYOUT
OX OPPOSITE

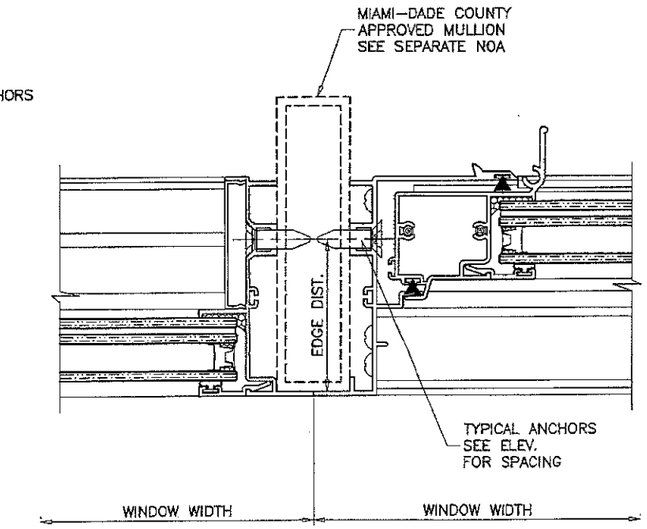


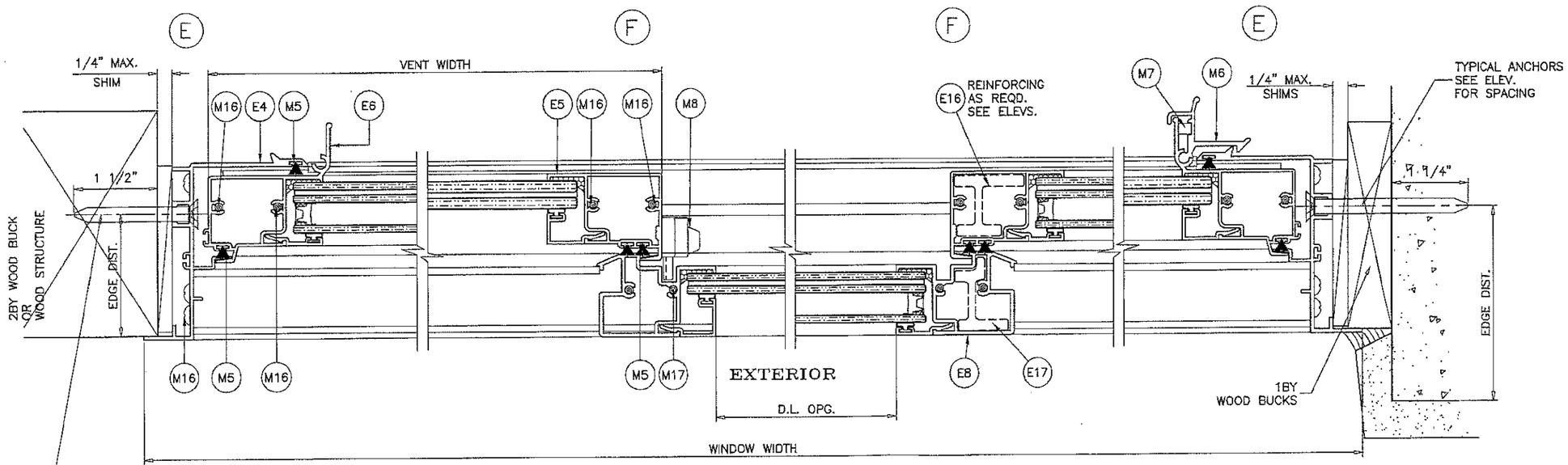


XOX LAYOUT

**PRODUCT REVISED**
**as complying with the Florida Building Code**
**NOA-No. 17-1114.06**
**Expiration Date 01/19/2022**
**By**
**Miami-Dade Product Control**

SEP 29 2017

JAVAD AHMAD
LICENSE
No. 70592
STATE OF FLORIDA
PROFESSIONAL ENGINEER


**AL-FAROOQ CORPORATION**
ENGINEERS & PRODUCT DEVELOPMENT
9360 SUNSET DRIVE, SUITE 220
MIAMI, FLORIDA 33173
(C.A.N. 3538)
TEL. (305) 264-8100 FAX. (305) 262-6978


COMP-ANL\W16-86ES

ES-EL200 HORIZONTAL ROLLING ALUM. WDW. (L.M.I.)

E.S. WINDOWS, LLC
3550 N.W. 49 STREET
MIAMI, FL. 33142
TEL. (305) 638-5151 FAX. (305) 638-5158

revisions:

| no | date | by | description |
|---|---|---|---|
| A | 01.11.17 | | NO CHANGE THIS SHEET |
| B | 09.27.17 | | NO CHANGE THIS SHEET |

date: 12-19-16
scale: 1/2" = 1"
dr. by: TARIQ
chk. by:

drawing no.
W16-86

sheet 6 of 11

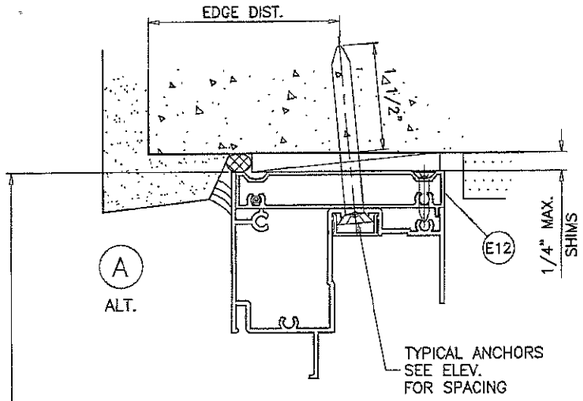


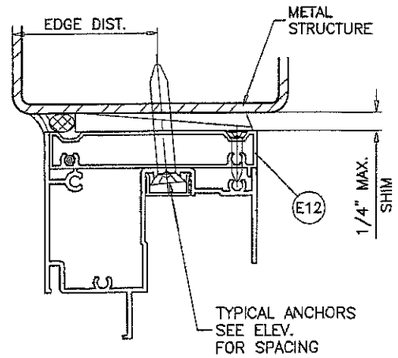


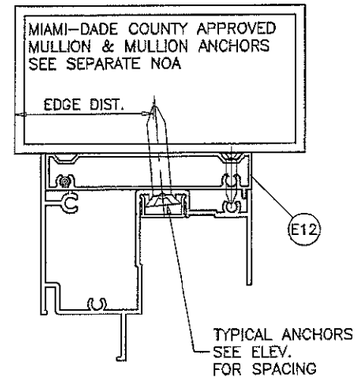


WINDOW HEIGHT

EXTERIOR

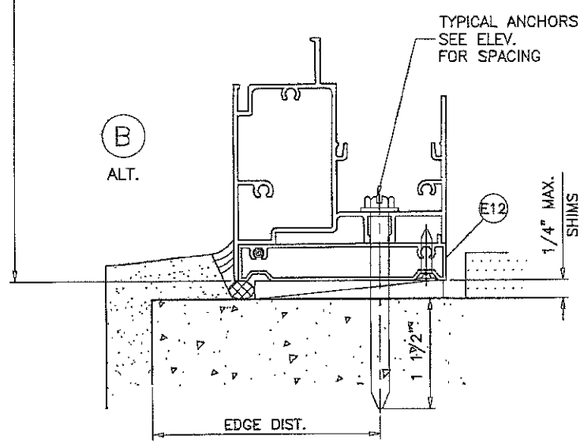


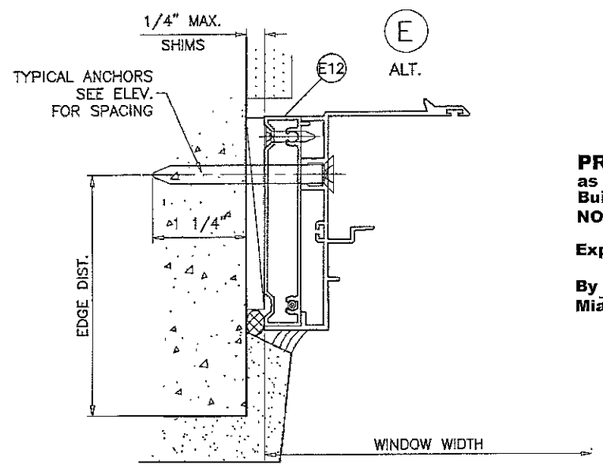


**PRODUCT REVISED**
**as complying with the Florida Building Code**
**NOA-No. 17-1114.06**
**Expiration Date 01/19/2022**
**By**
**Miami-Dade Product Control**

INSTALLATION DETAILS WITH FLUSH FRAME ADAPTER

SEE SHEETS 4 & 6 FOR WINDOW DETAILS

SEP 29 2017

JAVAD AHMAD
LICENSE
No. 70592
STATE OF FLORIDA
PROFESSIONAL ENGINEER


**AL-FAROOQ CORPORATION**
ENGINEERS & PRODUCT DEVELOPMENT
9360 SUNSET DRIVE, SUITE 220
MIAMI, FLORIDA 33173 (C.A.N. 3538)
TEL. (305) 264-8100 FAX. (305) 262-6978


COMP–ANL\W16–86ES

ES–EL200 HORIZONTAL ROLLING ALUM. WDW. (L.M.I.)

E.S. WINDOWS, LLC
3550 N.W. 49 STREET
MIAMI, FL. 33142
TEL. (305) 638–5151 FAX. (305) 638–5158

revisions:

| no | date | by | description |
|---|---|---|---|
| A | 01.11.17 | | NO CHANGE THIS SHEET |
| B | 09.27.17 | | NO CHANGE THIS SHEET |

date: 12–19–16
scale: 1/2" = 1"
dr. by: TARIQ
chk. by:

drawing no.
W16–86

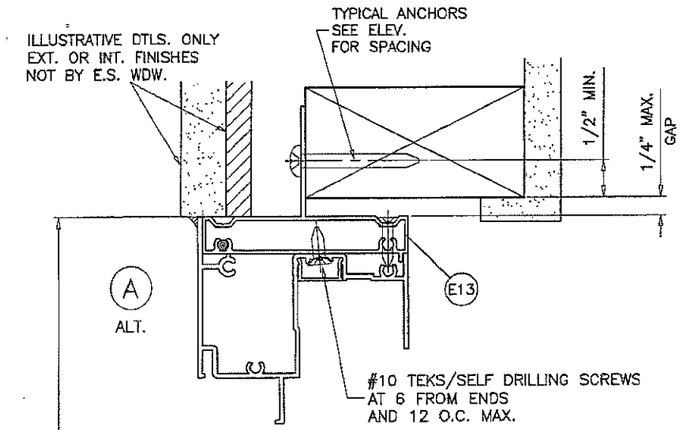


TYPICAL ANCHORS: SEE ELEV. FOR SPACING

#10 WOOD SCREWS (GRADE 2 CRS)

INTO 2BY WOOD BUCKS OR WOOD STRUCTURES
1-1/2" MIN. PENETRATION INTO WOOD

WINDOW HEIGHT

EXTERIOR

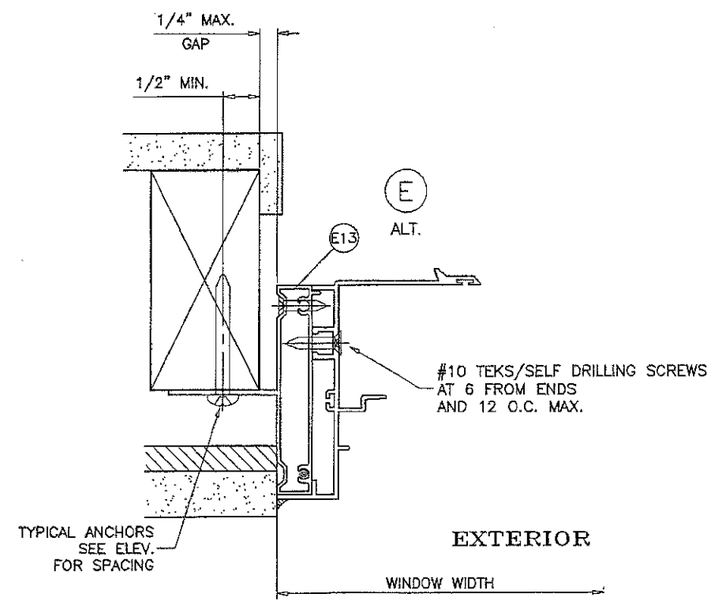


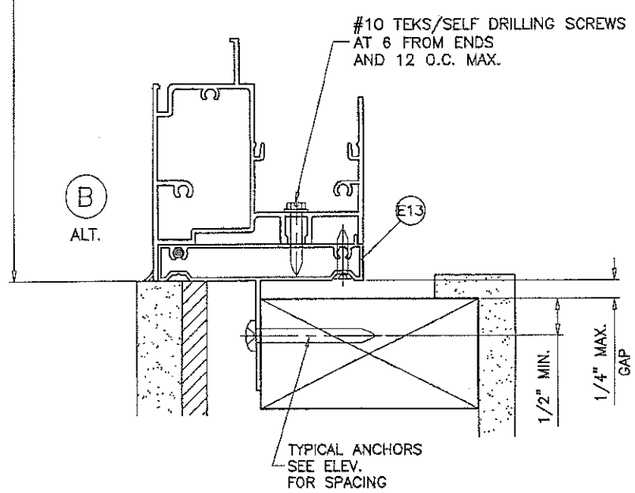


INSTALLATION DETAILS WITH FIN FRAME ADAPTER

SEE SHEETS 4 & 6 FOR WINDOW DETAILS

**PRODUCT REVISED**
**as complying with the Florida Building Code**
**NOA-No. 17-1114.06**
**Expiration Date 01/19/2022**
**By**
**Miami-Dade Product Control**

SEP 29 2017

JAVAD AHMAD
LICENSE
No. 70592
STATE OF FLORIDA
PROFESSIONAL ENGINEER


**AL-FAROOQ CORPORATION**
ENGINEERS & PRODUCT DEVELOPMENT
9360 SUNSET DRIVE, SUITE 220
MIAMI, FLORIDA 33173 (C.A.N. 3538)
TEL. (305) 264-8100 FAX. (305) 262-6978
COMP-ANL\W16-86ES


ES-EL200 HORIZONTAL ROLLING ALUM. WDW. (L.M.I.)

E.S. WINDOWS, LLC
3550 N.W. 49 STREET
MIAMI, FL. 33142
TEL. (305) 638-5151 FAX. (305) 638-5158

revisions:

| no | date | by | description |
|---|---|---|---|
| A | 01.11.17 | | NO CHANGE THIS SHEET |
| B | 08.27.17 | | NO CHANGE THIS SHEET |

date: 12-19-16
scale: 1/2" = 1"
dr. by: TARIQ
chk. by:

drawing no.
W16-86

| ITEM # | PART # | REQD. | DESCRIPTION | MATERIAL | MANF./SUPPLIER/REMARKS |
|---|---|---|---|---|---|
| E1 | ES-EL104 | 1 | FRAME HEAD | 6063-T6 | – |
| E2 | ES-EL201 | 1 | FRAME SILL | 6063-T6 | – |
| E3 | ES-EL202 | 1 | SILL TRACK | 6063-T6 | – |
| E4 | ES-EL102 | 2 | FRAME JAMB (OPERATING) | 6063-T6 | – |
| E4.1 | ES-EL101A | 2 | FRAME JAMB (FIXED) | 6063-T6 | – |
| E5 | ES-EL105 | 1 | INTERLOCK STILE | 6063-T6 | – |
| E6 | ES-EL106 | 1 | JAMB STILE | 6063-T6 | – |
| E7 | ES-EL107 | 2 | VENT TOP & BOTTOM RAIL | 6063-T6 | – |
| E8 | ES-EL108A | 1 | FIXED MTG. STILE | 6063-T6 | – |
| E9 | ES-EL109 | AS RQD. | GLAZING BEAD (5/16" LAM. GLASS) | 6063-T6 | – |
| E10 | ES-EL110 | AS RQD. | GLAZING BEAD (7/16" LAM. GLASS) | 6063-T6 | – |
| E11 | ES-EL111 | AS RQD. | GLAZING BEAD (INSUL. LAM. GLASS) | 6063-T6 | – |
| E12 | ES-EL112 | AS REQD. | FLUSH FRAME ADAPTER | 6063-T6 | – |
| E13 | ES-EL115 | AS REQD. | FLUSH FRAME ADAPTER WITH FIN | 6063-T5 | – |
| E14 | ES-EL114 | AS REQD. | HEAD SCREW COVER | 6063-T6 | – |
| E15 | ES-2011 | AS REQD. | SILL RISER | 6063-T6 | – |
| E16 | ES-EL220 | AS REQD. | INTERLOCK STILE STIFFENER | 6005-T5 | – |
| E17 | ES-EL221 | AS REQD. | FIX. MTG. STILE STIFFENER | 6005-T5 | – |
| E18 | ES-EL113A | AS REQD. | JAMB SCREW COVER | 6063-T6 | – |
| | | | | | |
| M1 | ES-5008A | AS REQD. | GLAZING BEAD BULB | SILICONE | DUROMETER 60±5 SHORE A |
| M2 | 80-372A | 2/ LITE | SETTING BLOCK AT 1/4 POINTS (LAM. GLASS) | SILICONE | DUROMETER 80±5 SHORE A |
| M3 | EL100-B01 | 2/ LITE | SETTING BLOCK AT 1/4 POINTS (INSUL. LAM. GLASS) | SILICONE | DUROMETER 80±5 SHORE A |
| M4 | EL100-301 | AS REQD. | VENT STOP | RIGID PVC | – |
| M5 | W23211NG | AS REQD. | PILE W'STRIPPING WITH PLASTIC FIN | POLYPROPYLENE | – |
| M6 | SK08-4010 | 2/ VENT | SPRING LOADED LATCH | 6063-T6 | ALTERNATE TO SWEEP LATCH |
| M7 | ES-1012 | 2/ LATCH | LATCH SPRING | ST. STEEL | – |
| M8 | SL302-XX | 2/ VENT | SWEEP LATCH | DIE CAST ALUM | – |
| M9 | WA2L | 2 | WEEP HOLE COVER | RIGID PVC | – |
| M10 | ES-1000-P1L | – | LEFT NOTCH CAP | NYLON | – |
| M11 | ES-1000-P1R | – | RIGHT NOTCH CAP | NYLON | – |
| M12 | WPSA-N1 | 2 | 3/4" X 3/4" RETIC FOAM PAD | FOAM | – |
| M13 | TAR-16019P-A | 2 | ROLLER | POLYAMIDE & ACETAL | – |
| M14 | TAR-16019P | 2 | ROLLER HOUSING | POLYAMIDE | – |
| M15 | #8 X 1" | – | FLUSH FRAME ADAPTER ASSEMBLY FASTENERS | ST. STEEL | FH SMS |
| M16 | #8 X 1" | – | FRAME AND VENT ASSEMBLY FASTENERS | ST. STEEL | PH SMS |
| M17 | #8 X 3" | – | FRAME SILL ASSEMBLY FASTENERS | ST. STEEL | PH SMS |
| M18 | #8 X 3/4" | – | SWEEP LATCH FASTENERS | ST. STEEL | FH SMS |
| M20 | #14 X 3/4" | – | ASSEMBLY FASTENERS FOR FLUSH ADAPTER | ST. STEEL | PH SMS |

**PRODUCT REVISED**
**as complying with the Florida Building Code**
**NOA-No. 17-1114.06**
**Expiration Date 01/19/2022**
**By**
**Miami-Dade Product Control**

SEP 29 2017

JAVAD AHMAD
LICENSE
No. 70592
STATE OF FLORIDA
PROFESSIONAL ENGINEER


**AL-FAROOQ CORPORATION**
ENGINEERS & PRODUCT DEVELOPMENT
9360 SUNSET DRIVE, SUITE 220
MIAMI, FLORIDA 33173 (C.A.N. 3538)
TEL. (305) 264-8100 FAX. (305) 262-6978


COMP-ANL\W16-86ES

ES-EL200 HORIZONTAL ROLLING ALUM. WDW. (L.M.I.)

E.S. WINDOWS, LLC
3550 N.W. 49 STREEET
MIAMI, FL. 33142
TEL. (305) 638-5151 FAX. (305) 638-5158

revisions:

| no | date | by | description |
|---|---|---|---|
| A | 01.11.17 | | NO CHANGE THIS SHEET |
| B | 09.27.17 | | NO CHANGE THIS SHEET |

date: 12-19-16
scale: 1/2" = 1"
dr. by: TARIQ
chk. by:

drawing no.
W16-86

sheet 9 of 11

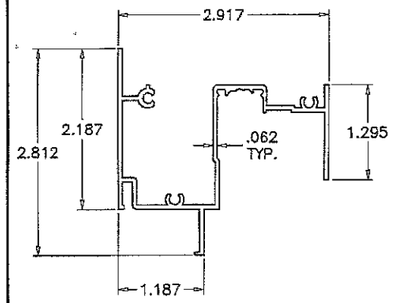


E1 FRAME HEAD

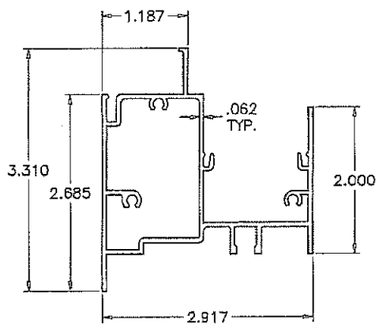


E2 FRAME SILL

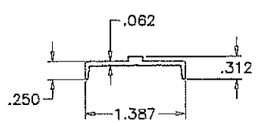


E3 SILL TRACK

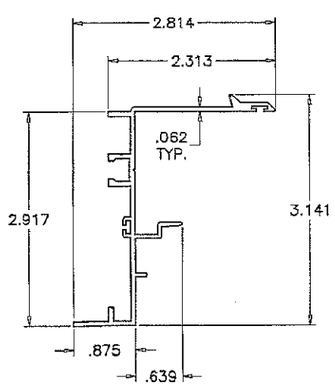


E4 FRAME JAMB (OPERATING)

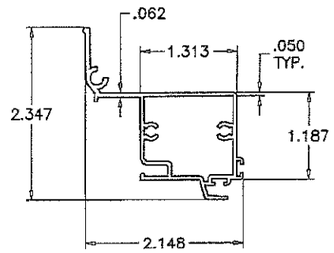


E6 JAMB STILE

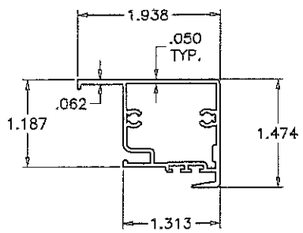


E5 INTERLOCK STILE

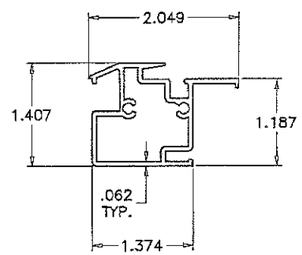


E8 FIXED MTG. STILE

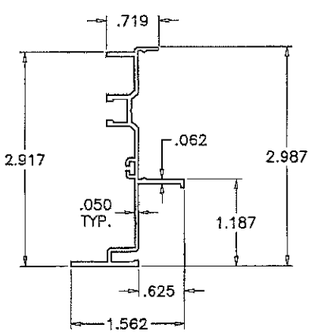


E4.1 FRAME JAMB (FIXED)

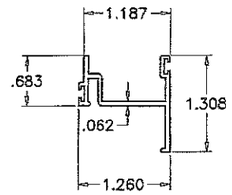


E7 VENT TOP/BOTTOM RAIL

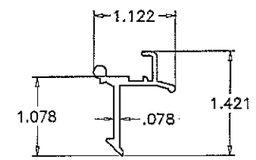


M6 SPRING LOADED LATCH

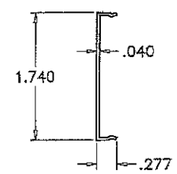


E18 JAMB SCREW COVER

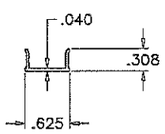


E14 HEAD SCREW COVER

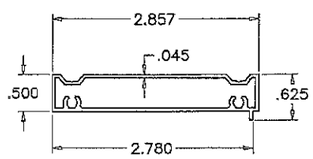


E12 FLUSH FRAME ADAPTER

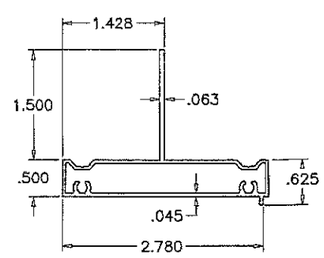


E13 FLUSH FRAME ADAPTER WITH FIN

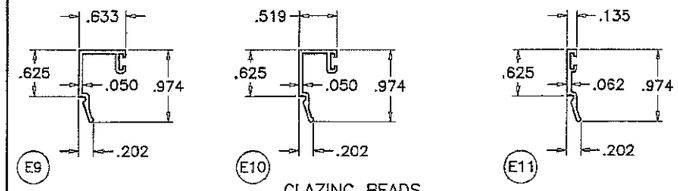


E9 E10 E11 GLAZING BEADS

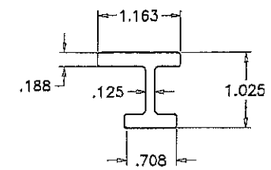


E16 INTERLOCK STILE STIFFENER

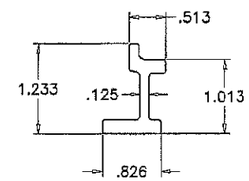


E17 FIX. MTG. STILE STIFFENER

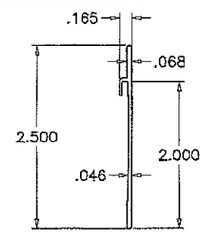


E15 SILL RISER

**PRODUCT REVISED**
**as complying with the Florida Building Code**
**NOA-No. 17-1114.06**
**Expiration Date 01/19/2022**
**By**
**Miami-Dade Product Control**

SEP 29 2017

JAVAD AHMAD
LICENSE
No. 70592
STATE OF FLORIDA
PROFESSIONAL ENGINEER


**AL-FAROOQ CORPORATION**
ENGINEERS & PRODUCT DEVELOPMENT
9360 SUNSET DRIVE, SUITE 220
MIAMI, FLORIDA 33173 (C.A.N. 3638)
TEL. (305) 264-8100 FAX. (305) 262-6978


COMP-ANL\W16-86ES

ES-EL200 HORIZONTAL ROLLING ALUM. WDW. (L.M.I.)

E.S. WINDOWS, LLC
3550 N.W. 49 STREET
MIAMI, FL. 33142
TEL. (305) 638-5151 FAX. (305) 638-5158

revisions:

| no | date | by | description |
|---|---|---|---|
| A | 01.11.17 | | NO CHANGE THIS SHEET |
| B | 09.27.17 | | NO CHANGE THIS SHEET |

date: 12-19-16
scale: 1/2" = 1"
dr. by: TARIQ
chk. by:

drawing no. W16-86

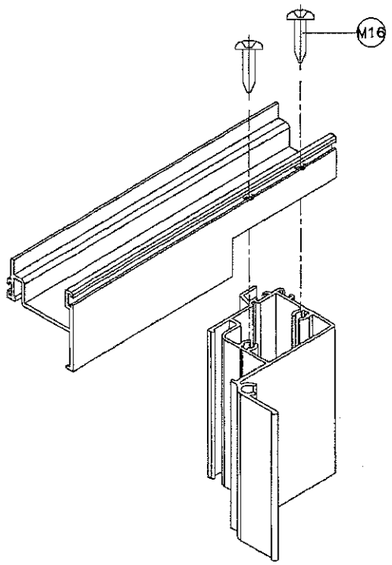


VENT TOP & BOTTOM CORNER

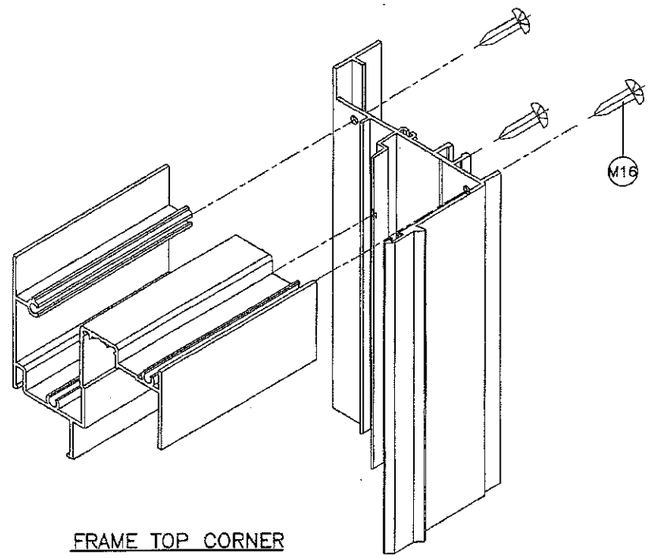


FRAME TOP CORNER

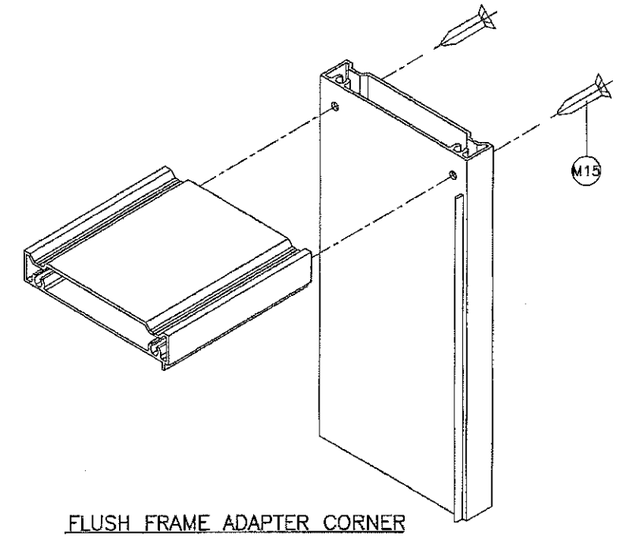


FLUSH FRAME ADAPTER CORNER

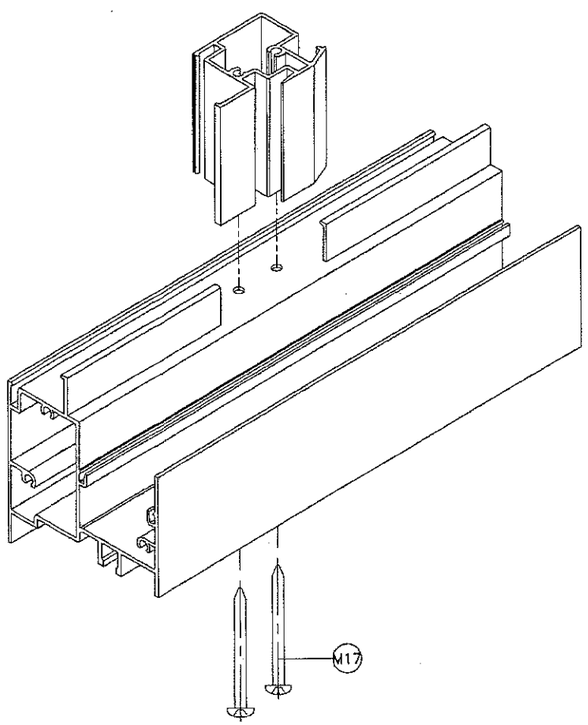


FIX. MTG. RAIL CORNER

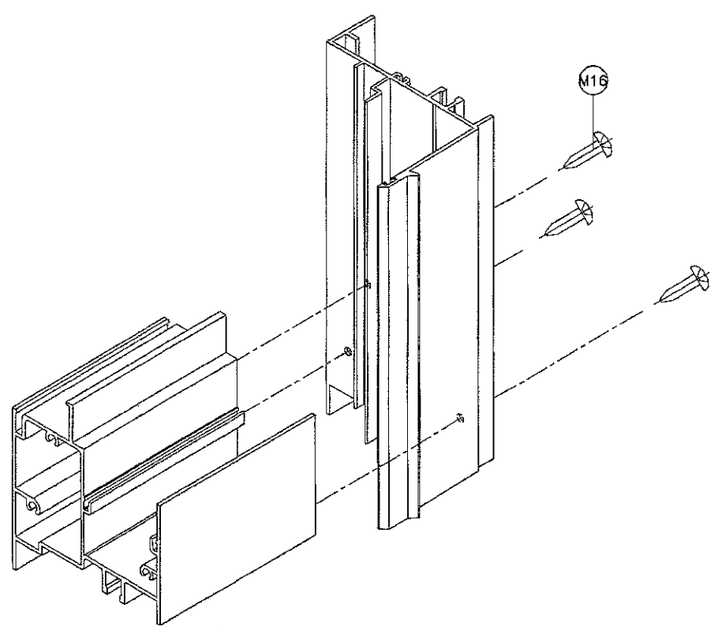


FRAME BOTTOM CORNER

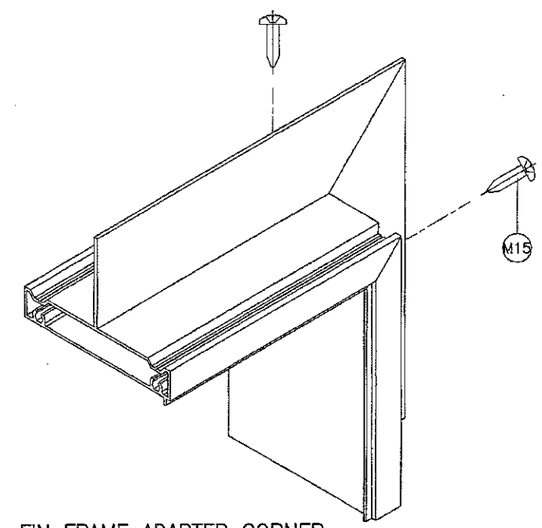


FIN FRAME ADAPTER CORNER

**PRODUCT REVISED**
**as complying with the Florida Building Code**
**NOA-No. 17-1114.06**
**Expiration Date 01/19/2022**
**By**
**Miami-Dade Product Control**

SEP 29 2017

JAVAD AHMAD
LICENSE
No. 70592
STATE OF FLORIDA
PROFESSIONAL ENGINEER


**AL-FAROOQ CORPORATION**
ENGINEERS & PRODUCT DEVELOPMENT
9360 SUNSET DRIVE, SUITE 220
MIAMI, FLORIDA 33173 (C.A.N. 3538)
TEL. (305) 264-8100 FAX. (305) 262-6978


COMP-ANL\W16-B6ES

ES-EL200 HORIZONTAL ROLLING ALUM. WDW: (L.M.I.)


E.S. WINDOWS, LLC
3550 N.W. 49 STREET
MIAMI, FL. 33142
TEL. (305) 638-5151 FAX. (305) 638-5158


revisions:

| no | date | by | description |
|---|---|---|---|
| A | 01.11.17 | | NO CHANGE THIS SHEET |
| B | 09.27.17 | | NO CHANGE THIS SHEET |

date: 12-19-16
scale: 1/2" = 1"
dr. by: TARIQ
chk. by:

drawing no.
W16-86

sheet 11 of 11