MIAMI-DADE COUNTY
PRODUCT CONTROL SECTION
11805 SW 26 Street, Room 208
Miami, Florida 33175-2474
T (786) 315-2590 F (786) 315-2599
www.miamidade.gov/economy

DEPARTMENT OF REGULATORY AND ECONOMIC RESOURCES (RER)
BOARD AND CODE ADMINISTRATION DIVISION

NOTICE OF ACCEPTANCE (NOA)

CGI Windows & Doors, Inc.
10100 N. W. 25th Street
Miami, Fl. 33172

SCOPE:

This NOA is being issued under the applicable rules and regulations governing the use of construction materials. The documentation submitted has been reviewed and accepted by Miami-Dade County RER -Product Control Section to be used in Miami Dade County and other areas where allowed by the Authority Having Jurisdiction (AHJ).
This NOA shall not be valid after the expiration date stated below. The Miami-Dade County Product Control Section (In Miami Dade County) and/or the AHJ (in areas other than Miami Dade County) reserve the right to have this product or material tested for quality assurance purposes. If this product or material fails to perform in the accepted manner, the manufacturer will incur the expense of such testing and the AHJ may immediately revoke, modify, or suspend the use of such product or material within their jurisdiction. RER reserves the right to revoke this acceptance, if it is determined by Miami-Dade County Product Control Section that this product or material fails to meet the requirements of the applicable building code.
This product is approved as described herein, and has been designed to comply with the Florida Building Code, including the High Velocity Hurricane Zone.

DESCRIPTION: Series "160 Sentinel" Aluminum Outswing Glazed Doors w/wo Sidelites - LMI

APPROVAL DOCUMENT: Drawing No.**W13-01 Rev F**, titled "Series Sentinel 160 Alum Outswing Door (L.M.I./S.M.I.)", sheets 1 thru of 13 of 13, inclusive sheet 1.1, prepared by Al-Farooq Corporation, dated 01/03/13 and last revised on 02/13/18, signed and sealed by Javad Ahmad, P.E., bearing the Miami-Dade County Product Control Revision stamp with the Notice of Acceptance number and expiration date by the Miami-Dade County Product Control Section.

MISSILE IMPACT RATING: Large and Small Missile Impact

Limitations:

1. See Design Pressure ratings single and double doors in sheet **2** , single sidelite in sheet **3** and door mullion in sheet **4**. For mulled unit lower design of door or sidelite or mullion shall apply to the entire assembly.
2. See glazing option in sheets **1** and **1.1** and locking hardware options in sheet **9**.

LABELING: Each unit shall bear a permanent label with the manufacturer's name or logo, city, state and series and following statement: "Miami-Dade County Product Control Approved", noted herein.

RENEWAL of this NOA shall be considered after a renewal application has been filed and there has been no change in the applicable building code negatively affecting the performance of this product.

TERMINATION of this NOA will occur after the expiration date or if there has been a revision or change in the materials, use, and/or manufacture of the product or process. Misuse of this NOA as an endorsement of any product, for sales, advertising or any other purposes shall automatically terminate this NOA. Failure to comply with any section of this NOA shall be cause for termination and removal of NOA.

ADVERTISEMENT: The NOA number preceded by the words Miami-Dade County, Florida, and followed by the expiration date may be displayed in advertising literature. If any portion of the NOA is displayed, then it shall be done in its entirety.

INSPECTION: A copy of this entire NOA shall be provided to the user by the manufacturer or its distributors and shall be available for inspection at the job site at the request of the Building Official.
This NOA revises and renews # **14-1015.04** and consists of this page 1 and evidence pages E-1, E-2 & E-3, as well as approval document mentioned above.
The submitted documentation was reviewed by **Jorge M. Plasencia, P.E.**

MIAMI-DADE COUNTY APPROVED

02/16/2018

NOA No. 17-1226.05
Expiration Date: August 08, 2023
Approval Date: February 22, 2018

NOTICE OF ACCEPTANCE: EVIDENCE SUBMITTED

1. EVIDENCE SUBMITTED UNDER PREVIOUS NOA'S

A. DRAWINGS

1. Manufacturer's die drawings and sections (submitted under files below)
2. Drawing No.**W13-01 Rev D**, titled "Series 160 Sentinel Outswing Doors", sheets 1 thru of 11 of 11, inclusive sheet 9.1, prepared by Al-Farooq Corporation, dated 01-03-13 and last revised on AUG 05, 2015, signed and sealed by Javad Ahmad, P.E.

B. TESTS (submitted under file **#13-0226.06**)

1. Test reports on: 1) Air Infiltration Test, per FBC, TAS 202-94
   2) Uniform Static Air Pressure Test, Loading per FBC TAS 202-94
   3) Water Resistance Test, per FBC, TAS 202-94(+50.0 PSF, sill S-I only)
   4) Large Missile Impact Test per FBC, TAS 201-94
   5) Cyclic Wind Pressure Loading per FBC, TAS 203-94
   6) Forced Entry Test, per FBC 2411 3.2.1, TAS 202-94

   Along with manufacturer's parts and section drawing marked-up drawings of aluminum out w/ sidelites, by American test Lab of South Florida, Inc., Test Report No. **ATLSF-1218.01-12** dated 02/11/2013, signed and sealed by Henry Hatem, P.E.
2. Test reports on: 1) Uniform Static Air Pressure Test, Loading per FBC TAS 202-94
   2) Large Missile Impact Test per FBC, TAS 201-94
   3) Cyclic Wind Pressure Loading per FBC, TAS 203-94

   Along with manufacturer's parts and section drawing marked-up drawings of aluminum sidelites, issued by Certified Testing Lab., Test Report No. **CTLA 3056WC** (sample #3) dated 04/16/2015, signed and sealed by Ramesh Patel, P.E

C. CALCULATIONS

1. Anchor verification calculations and structural analysis, complying with FBC-2014 (**5th Edition**), prepared by Al Farooq Corporation, dated 10/06/2014, 05/19/15 and last revised on AUG 04, 2015, signed and sealed by Javad Ahmad, P.E.
2. Glazing complies w/ ASTME-1300-02, -04 and -2009.

D. QUALITY ASSURANCE

1. Miami Dade Department of Regulatory and Economic Resources (RER).

E. MATERIAL CERTIFICATIONS

1. Notice of Acceptance No. **11-0624.02** issued to E.I. DuPont DeNemours & Co., Inc. for their "**DuPont Sentry Glass ® Interlayer**", expiring on 01/14/17.
2. Notice of Acceptance No. **12-1231.10** issued to Eastman Chemical Company(MA) former Solutia Inc. for "Saflex clear & color glass interlayer", expiring on 05/21/16.
3. Notice of Acceptance No. **12-1231.08** issued to Eastman Chemical Company(MA) former Solutia Inc. for "Saflex CP-Saflex & Saflex HP composite interlayer w/ PET core", expiring on 12/11/18.

Jorge M. Plasencia, P.E.
Product Control Unit Supervisor
NOA No 17-1226.05
Expiration Date: August 08, 2023
Approval Date: February 22, 2018

NOTICE OF ACCEPTANCE: EVIDENCE SUBMITTED

F. STATEMENTS

1. Statement letter of conformance to FBC 2014 (5th Edition) and letter of no financial interest, prepared by Al Farooq Corporation, dated 09/23/14, signed and sealed by Javad Ahmad, P.E.
2. Lab compliance and addendum letters, as part of the above referenced test reports.

G. OTHER

1. This file NOA revises # **13-0226.06,** expiring 08/08/18.
2. Test proposals approved dated 12/16/14 & # **12-0553**, dated 04/25/12 approved by RER.

2. NEW EVIDENCE SUBMITTED

A. DRAWINGS

1. Drawing No.**W13-01 Rev F**, titled "Series Sentinel 160 Alum Outswing Door (L.M.I./S.M.I.)", sheets 1 thru of 13 of 13, inclusive sheet 1.1, prepared by Al-Farooq Corporation, dated 01/03/13 and last revised on 02/13/18, signed and sealed by Javad Ahmad, P.E.

B. TESTS

1. Test reports on: 1) Air Infiltration Test, per FBC, TAS 202-94
   2) Uniform Static Air Pressure Test, Loading per FBC TAS 202-94
   3) Water Resistance Test, per FBC, TAS 202-94
   4) Large Missile Impact Test per FBC, TAS 201-94
   5) Cyclic Wind Pressure Loading per FBC, TAS 203-94

Along with manufacturer's parts and section drawing marked-up drawings of aluminum out w/ sidelites, by Fenestration Testing Laboratory, Inc., Test Report No. **FTL 17102** dated 05/19/17, signed and sealed by Idalmis Ortega, P.E.

C. CALCULATIONS

1. Anchor verification calculations and structural analysis, complying with **FBC 6th Edition (2017)**, prepared by Al Farooq Corporation, dated 11/13/17, signed and sealed by Javad Ahmad, P.E.
2. Glazing complies w/ ASTME-1300-09.

D. QUALITY ASSURANCE

1. Miami Dade Department of Regulatory and Economic Resources (RER).

Jorge M. Plasencia, P.E.
Product Control Unit Supervisor
NOA No 17-1226.05
Expiration Date: August 08, 2023
Approval Date: February 22, 2018

NOTICE OF ACCEPTANCE: EVIDENCE SUBMITTED

E. MATERIAL CERTIFICATIONS

1. Notice of Acceptance No. **17-0808.02** issued to Kuraray America., Inc. for their "**Sentry Glas® (Clear and White) Interlayer**", expiring on 07/04/23.
2. Notice of Acceptance No. **17-0712.05** issued to Eastman Chemical Company (MA) for their "**Saflex Clear & Color glass Interlayers**", expiring on 05/21/21.
3. Notice of Acceptance No. **17-0712.03** issued to Eastman Chemical Company (MA) for their "**Saflex CP-Saflex & Saflex HP Composite Glass Interlayers w/ PET Core**", expiring on 12/11/18.
4. Notice of Acceptance No. **17-1114.14** issued to Kuraray America., Inc. for their "Trosifol® **Ultraclear, Clear, and Color PVB Glass Interlayers**", expiring on 07/08/19.

F. STATEMENTS

1. Statement letter of conformance to **FBC 6th Edition (2017)** and of no financial interest prepared by Al Farooq Corporation, dated 11/13/17, signed and sealed by Javad Ahmad, P.E.

G. OTHER

1. This NOA revises NOA #14-1015.04, expiring on 08/08/18.
2. Test proposal #16-0947, dated 07/26/16, approved by RER.

Jorge M. Plasencia, P.E.
Product Control Unit Supervisor
NOA No 17-1226.05
Expiration Date: August 08, 2023
Approval Date: February 22, 2018

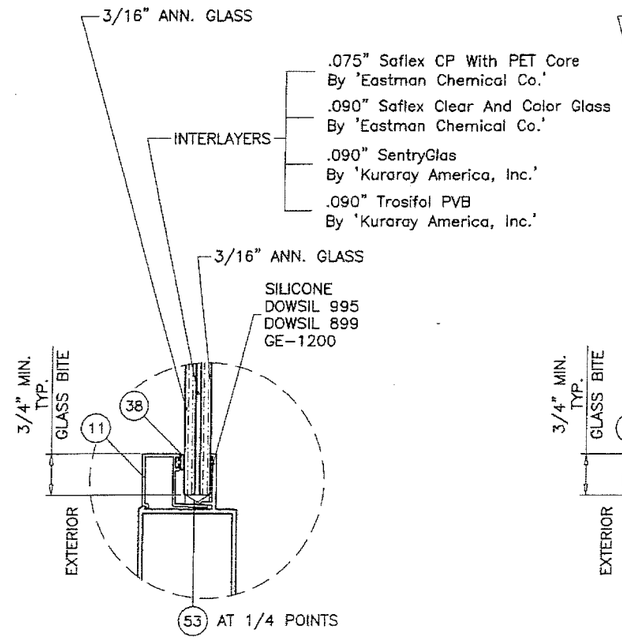

GLASS TYPE 'A'
7/16" OVERALL LAM. GLASS

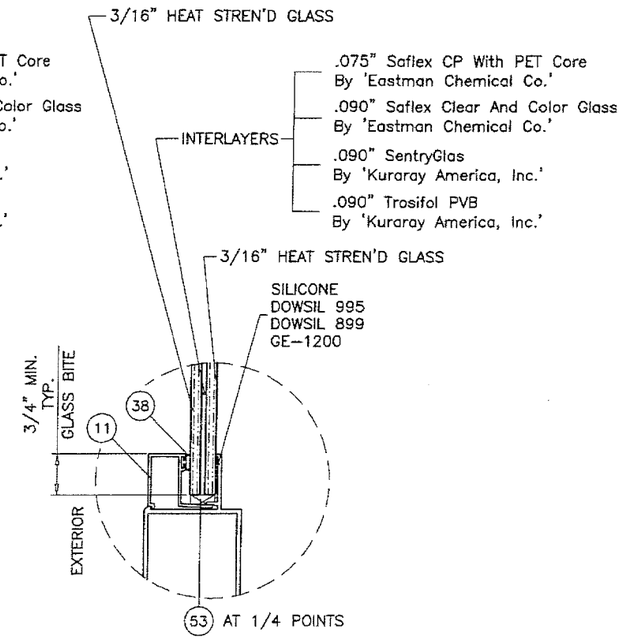

GLASS TYPE 'B'
7/16" OVERALL LAM. GLASS

GLAZING OPTIONS

SERIES SENTINEL 160
ALUMINUM OUTSWING DOOR W/ SIDELITES

APPROVAL APPLIES TO SINGLE (X) AND DOUBLE (XX) LEAF DOORS WITH OR WITHOUT SIDELITES.
SIDE LITES CAN BE ON ONE OR BOTH SIDES OF DOOR.

DOORS WITH STANDARD THRESHOLD APPROVED FOR INSTALLATIONS WHERE WATER INFILTRATION RESISTANCE IS REQUIRED.
DOORS WITH SADDLE (ADA) THRESHOLD NOT APPROVED FOR WATER INFILTRATION RESISTANCE.

THIS PRODUCT HAS BEEN DESIGNED AND TESTED TO COMPLY WITH THE REQUIREMENTS OF THE 2017 (6TH EDITION) FLORIDA BUILDING CODE INCLUDING HIGH VELOCITY HURRICANE ZONE (HVHZ).

1BY OR 2BY WOOD BUCKS & BUCK FASTENERS BY OTHERS, MUST BE DESIGNED AND INSTALLED ADEQUATELY TO TRANSFER APPLIED PRODUCT LOADS TO THE BUILDING STRUCTURE.

ANCHORS SHALL BE CORROSION RESISTANT, SPACED AS SHOWN ON DETAILS AND INSTALLED PER MANUF'S INSTRUCTIONS. SPECIFIED EMBEDMENT TO BASE MATERIAL SHALL BE BEYOND WALL DRESSING OR STUCCO.

A LOAD DURATION INCREASE IS USED IN DESIGN OF ANCHORS INTO WOOD ONLY.

ALL SHIMS TO BE HIGH IMPACT, NON-METALLIC AND NON-COMPRESSIBLE.

MATERIALS INCLUDING BUT NOT LIMITED TO STEEL/METAL SCREWS, THAT COME INTO CONTACT WITH OTHER DISSIMILAR MATERIALS SHALL MEET THE REQUIREMENTS OF THE 2017 FLORIDA BLDG. CODE & ADOPTED STANDARDS.

THIS PRODUCT APPROVAL IS GENERIC AND DOES NOT PROVIDE INFORMATION FOR A SITE SPECIFIC PROJECT, i.e. LIFE SAFETY OF THIS PRODUCT, ADEQUACY OF STRUCTURE RECEIVING THIS PRODUCT AND SEALING AROUND OPENING FOR WATER INFILTRATION RESISTANCE ETC.
CONDITIONS NOT SHOWN IN THIS DRAWING ARE TO BE ANALYZED SEPARATELY, AND TO BE REVIEWED BY BUILDING OFFICIAL.

INSTRUCTIONS:

USE CHARTS AS FOLLOWS.

STEP 1 DETERMINE DESIGN WIND LOAD REQUIREMENT BASED ON WIND VELOCITY, BLDG. HEIGHT, WIND ZONE USING APPLICABLE ASCE 7 STANDARD.

STEP 2 FOR SINGLE (X) AND DOUBLE (XX) DOOR CAPACITIES SEE SHEET 2.

STEP 3 FOR SIDELITE PANEL (O) CAPACITY SEE SHEET 3.

STEP 4 FOR SIDELITE COMBINATION WITH DOOR SEE MULLION CAPACITY CHART ON SHEET 4.

STEP 5 THE LOWEST VALUE RESULTING FROM STEPS 2, 3 AND 4 SHALL APPLY TO ENTIRE SYSTEM.

PRODUCT REVISED
as complying with the Florida Building Code
NOA-No. 17-1226.05
Expiration Date 08/08/2023
By
Miami-Dade Product Control

DOORS/SIDELITES ARE RATED FOR LARGE AND SMALL MISSILE IMPACT. SHUTTERS ARE NOT REQUIRED.

FEB 1 5 2018

JAVAD AHMAD
LICENSE
No. 70592
STATE OF FLORIDA
PROFESSIONAL ENGINEER

AL-FAROOQ CORPORATION
ENGINEERS & PRODUCT DEVELOPMENT
9360 SUNSET DRIVE, SUITE 220
MIAMI, FLORIDA 33173 (C.A.N. 3538)
TEL. (305) 264-8100 FAX. (305) 262-6978
COMP-ANL\W13-01CGI

SERIES SENTINEL 160 ALUM OUTSWING DOOR (L.M.I./S.M.I.)

CGI Windows and Doors, Inc.
10100 N.W. 25TH STREET
MIAMI, FL. 33172
TEL. (305) 593-6590 FAX. (305) 593-6592

revisions:

no	date	by	description
C	05.14.15		NO CHANGE THIS SHEET
D	08.05.15		REV. PER RER COMMENTS
E	11.16.17		GENERAL REVISION
F	02.13.18		REV. PER RER COMMENTS

date: 01-03-13
scale: 3/8" = 1"
dr. by: TARIQ
chk. by:

drawing no.
W13-01

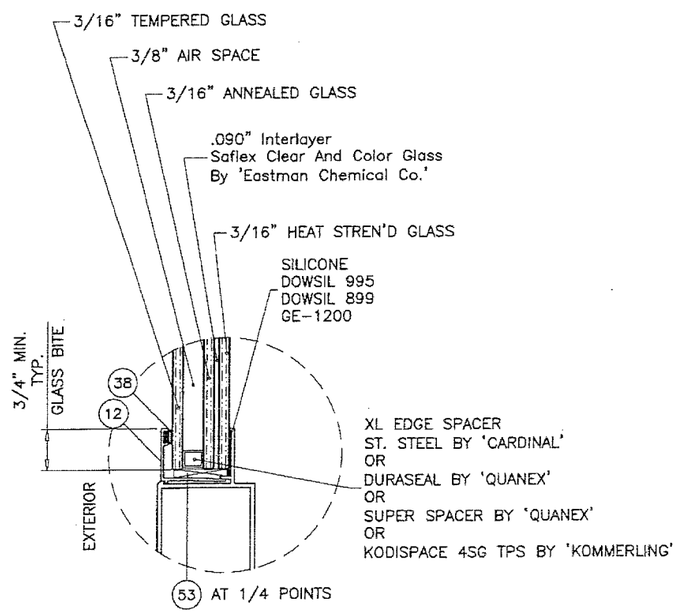

GLASS TYPE 'C1'

1" OVERALL INSUL. LAM. GLASS

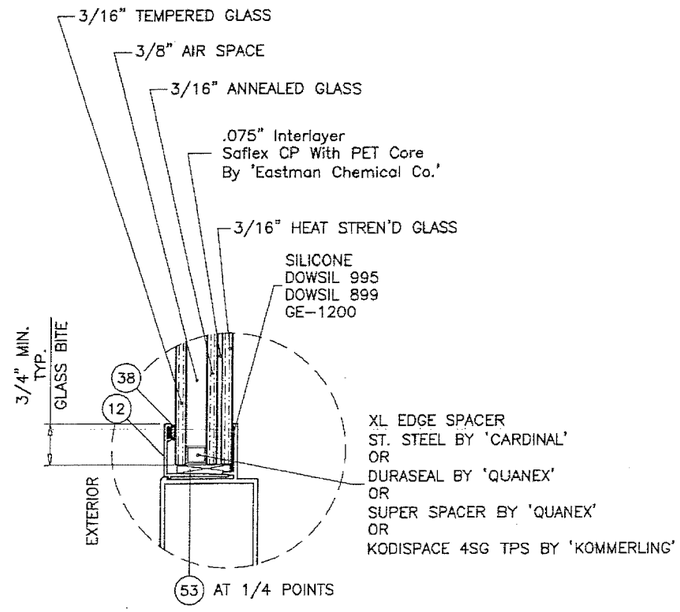

GLASS TYPE 'C2'

1" OVERALL INSUL. LAM. GLASS

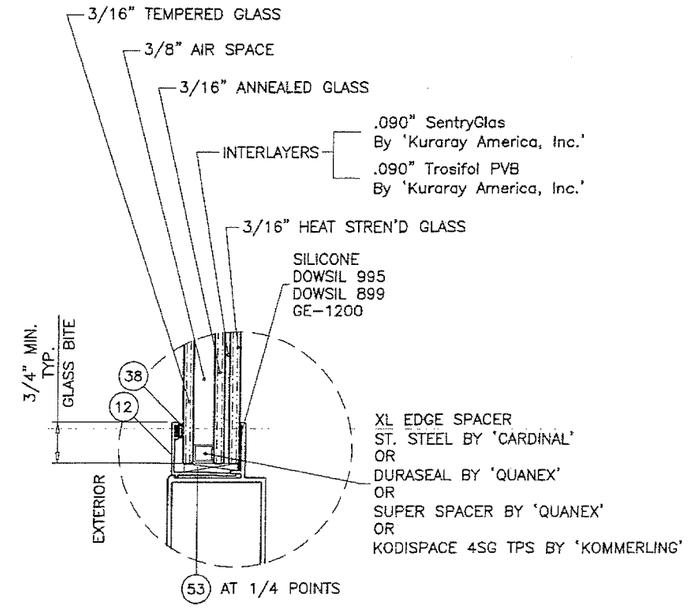

GLASS TYPE 'C3'

1" OVERALL INSUL. LAM. GLASS

GLAZING OPTIONS

PRODUCT REVISED
as complying with the Florida Building Code
NOA-No. 17-1226.05

Expiration Date 08/08/2023

By
Miami-Dade Product Control

FEB 1 5 2018

JAVAD AHMAD
LICENSE
No. 70592
STATE OF FLORIDA
PROFESSIONAL ENGINEER

AL-FAROOQ CORPORATION
ENGINEERS & PRODUCT DEVELOPMENT
9360 SUNSET DRIVE, SUITE 220
MIAMI, FLORIDA 33173 (C.A.N. 3538)
TEL. (305) 264-8100 FAX. (305) 262-5978

COMP-ANL\W13-01CGI

SERIES SENTINEL 160 ALUM OUTSWING DOOR (L.M.I./S.M.I.)

CGI Windows and Doors, Inc.
10100 N.W. 25TH STREET
MIAMI, FL. 33172
TEL. (305) 593-6590 FAX. (305) 593-6592

revisions:

no	date	by	description
E	11.16.17		GENERAL REVISION
F	02.13.18		REV. PER RER COMMENTS

date: 01-03-13
scale: 3/8" = 1"
dr. by: TARIQ
chk. by:

drawing no. W13-01

sheet 1.1 of 13

HEAD ANCHORS QUANTITY AT STILE ENDS			
	ANCHOR TYPE		
SHIM	'A'	'B'	'C'
1/4"	4	4	4
3/8"	6	6	6
1/2"	7	7	–

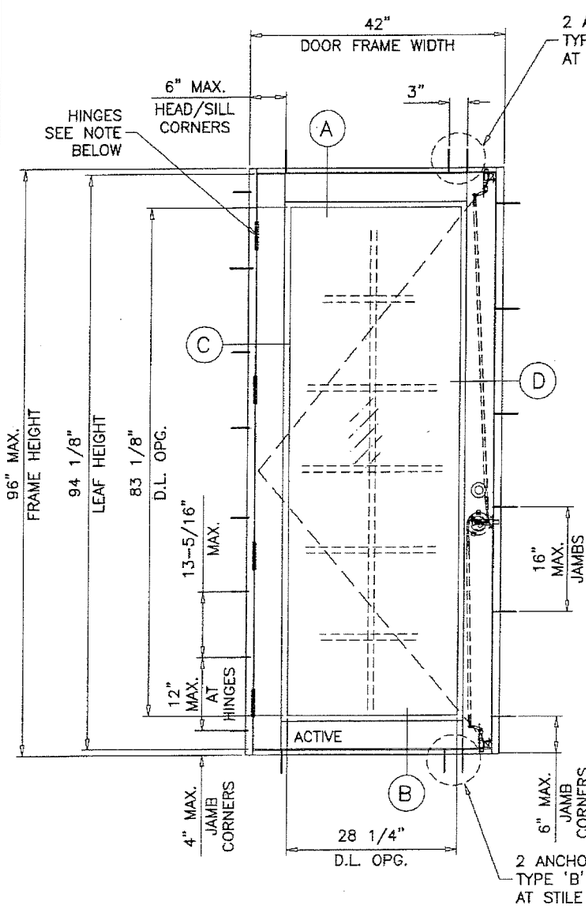

TYPICAL ELEVATION

(X)

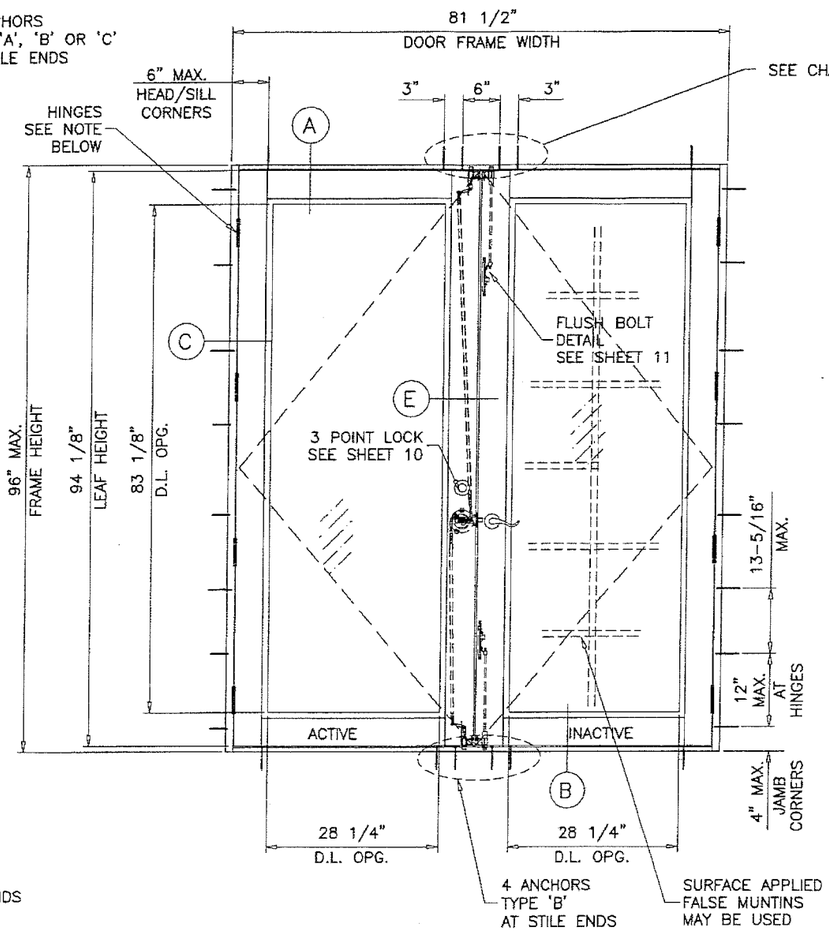

TYPICAL ELEVATION

(XX)

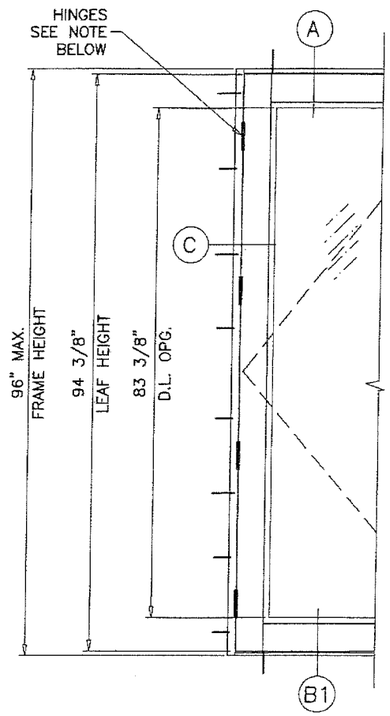

SINGLE OR DOUBLE DOORS

WITH SADDLE (ADA) SILL

DOOR OPTIONS

SINGLE (X) OR DOUBLE (XX) DOORS LOAD CAPACITY – ± PSF GLASS TYPES 'A', 'B', 'C1', 'C2' & 'C3'											
FRAME			LEAF	THRESHOLD TYPES		LOCK SETS			INSUL. GLASS SPACERS		
WIDTH (X)	WIDTH (XX)	HEIGHT	WIDTH	STD.	ADA	SCH	CC	BLDW	CXL	KOD	QUAN
37-1/4"	72"	96"	35"	80.0	70.0	80.0	80.0	80.0	80.0	80.0	80.0
42"	81-1/2"	96"	39-3/4"	80.0	70.0	80.0	80.0	70.0	70.0	80.0	–

NOTE:
VERIFY COMPLIANCE WITH EGRESS LIMITATIONS WHERE REQUIRED.

NOTE:
FLUSH BOLTS AND LOCKS MUST BE ENGAGED TO HEAD AND SILL DURING PERIODS OF HURRICANE WARNING.

NOTE:
GLASS CAPACITIES ON THIS SHEET ARE BASED ON ASTM E1300-09 (3 SEC. GUSTS) AND FLORIDA BUILDING COMMISSION DECLARATORY STATEMENT DCA05-DEC-219

DOOR D.L.O. DIMS.

D.L.O. HEIGHT = FRAME HEIGHT – 12.875"
D.L.O. WIDTH (X DOORS) = FRAME WIDTH – 13.75"
D.L.O. WIDTH (XX DOORS) = (FRAME WIDTH – 25)/2

LOCK SETS:
SCH = SCHLAGE
CC = COPPER CREEK
BLD = BALDWIN

GLASS INSULATORS:
CXL = CARDINAL XL
KOD = KODISPACE
QUAN = QUANEX DURASEAL
QUANEX SUPERSPACER

HINGES:
4" X 4-1/2" BUTT HINGES
TOP AND BOTTOM HINGES AT 6-7/8" FROM EACH END
INTERMEDIATE HINGES EQUALLY SPACED
(3) HINGES PER LEAF UPTO 35" LEAF WIDTHS (STD. THRESHOLD ONLY)
(4) HINGES PER LEAF ABOVE 35" LEAF WIDTHS (STD. THRESHOLD)
(4) HINGES PER LEAF ALL WIDTHS (SADDLE THRESHOLD)

FEB 1 5 2018
PRODUCT REVISED
as complying with the Florida Building Code
NOA-No. 17-1226.05
Expiration Date 08/08/2023
By
Miami-Dade Product Control

JAVAD AHMAD
LICENSE
No. 70592
STATE OF FLORIDA
PROFESSIONAL ENGINEER

AL-FAROOQ CORPORATION
ENGINEERS & PRODUCT DEVELOPMENT
9360 SUNSET DRIVE, SUITE 220
MIAMI, FLORIDA 33173 (C.A.N. 3598)
TEL. (305) 264-8100 FAX. (305) 262-6978

COMP-ANL\W13-01CGI

SERIES SENTINEL 160 ALUM OUTSWING DOOR (L.M.I./S.M.I.)

CGI Windows and Doors, Inc.
10100 N.W. 25TH STREET
MIAMI, FL. 33172
TEL. (305) 593-6590 FAX. (305) 593-6592

revisions:

no	date	by	description
C	05.14.15		NO CHANGE THIS SHEET
D	08.05.15		REV. PER RER COMMENTS
E	11.16.17		GENERAL REVISION
F	02.13.18		NO CHANGE THIS SHEET

date: 01-03-13
scale: 3/8" = 1"
dr. by: TARIQ
chk. by:

drawing no.
W13-01

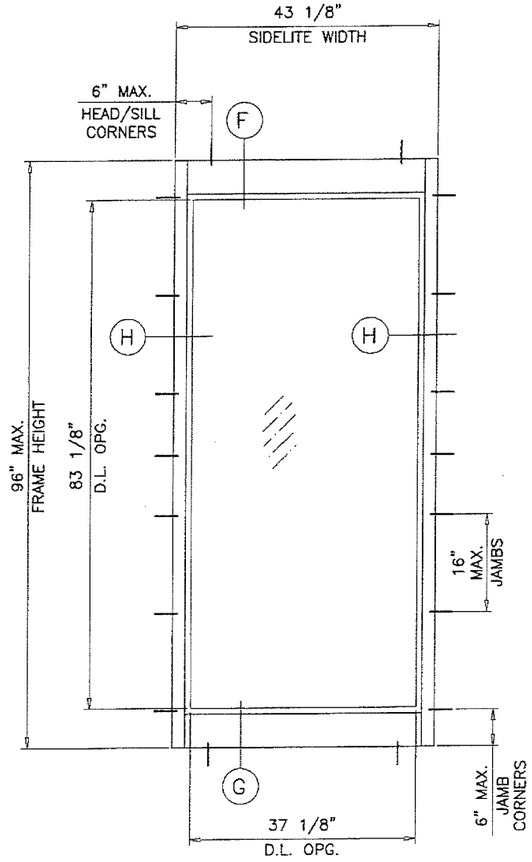

TYPICAL ELEVATION

(O)

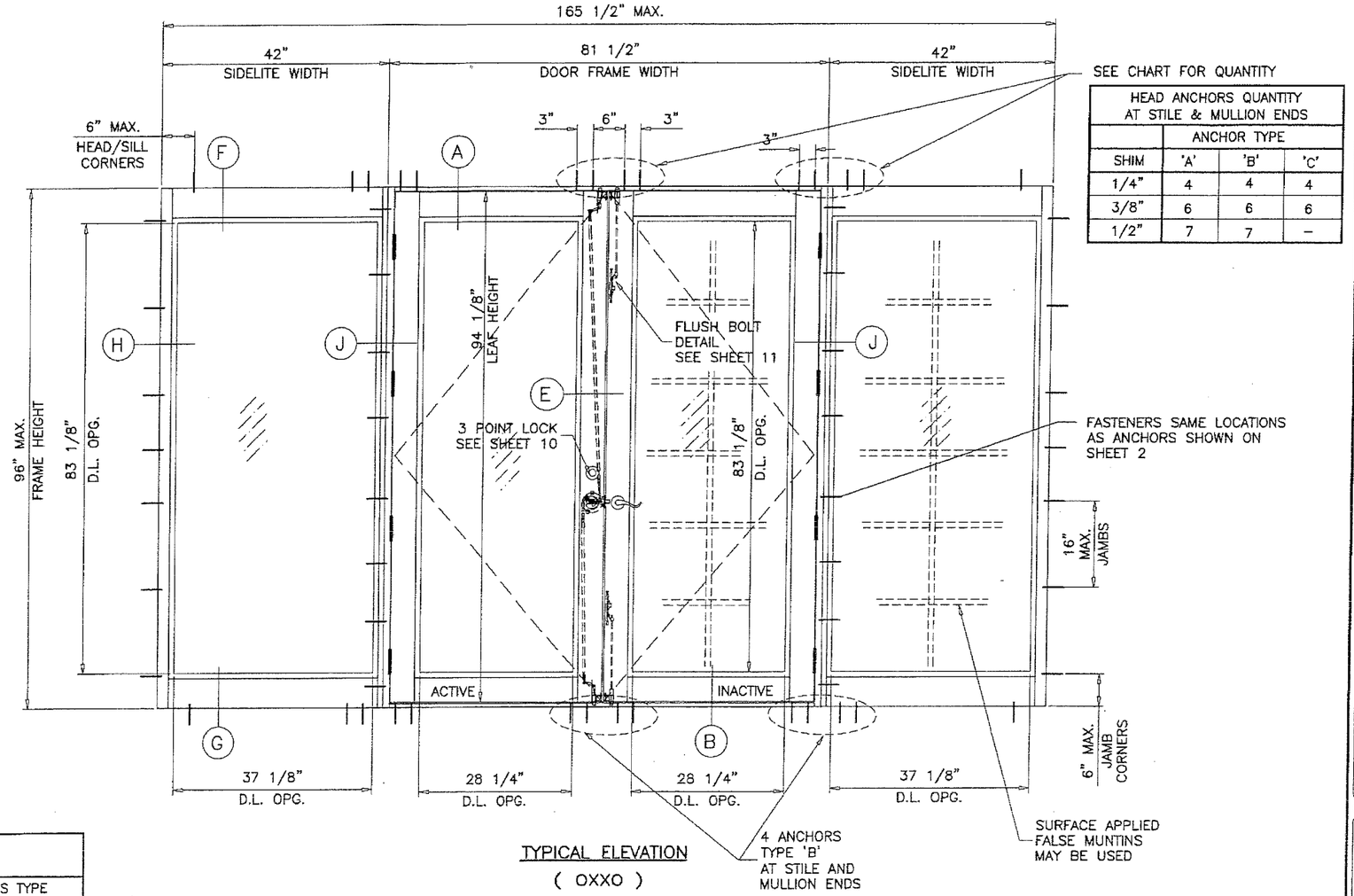

TYPICAL ELEVATION

(OXXO)

HEAD ANCHORS QUANTITY AT STILE & MULLION ENDS			
	ANCHOR TYPE		
SHIM	'A'	'B'	'C'
1/4"	4	4	4
3/8"	6	6	6
1/2"	7	7	–

SIDELITE LOAD CAPACITY – PSF OR STAND ALONE STATIONARY PANEL (0)							
FRAME		GLASS TYPES 'A', 'B', 'C1'		GLASS TYPE 'C2'		GLASS TYPE 'C3'	
WIDTH	HEIGHT	EXT.(+)	INT.(–)	EXT.(+)	INT.(–)	EXT.(+)	INT.(–)
30"	84"	80.0	80.0	80.0	80.0	80.0	80.0
33"		80.0	80.0	80.0	80.0	80.0	80.0
36"		80.0	80.0	80.0	80.0	80.0	80.0
37–1/8"		80.0	80.0	80.0	80.0	80.0	80.0
39"		80.0	80.0	80.0	80.0	80.0	80.0
42"		80.0	80.0	80.0	80.0	80.0	80.0
30"	90"	80.0	80.0	80.0	80.0	80.0	80.0
33"		80.0	80.0	80.0	80.0	80.0	80.0
36"		80.0	80.0	80.0	80.0	80.0	80.0
37–1/8"		80.0	80.0	80.0	80.0	80.0	80.0
39"		80.0	80.0	80.0	80.0	80.0	80.0
42"		–	–	70.0	70.0	80.0	80.0
30"	96"	80.0	80.0	80.0	80.0	80.0	80.0
33"		80.0	80.0	80.0	80.0	80.0	80.0
36"		80.0	80.0	80.0	80.0	80.0	80.0
37–1/8"		80.0	80.0	80.0	80.0	80.0	80.0
39"		–	–	70.0	70.0	80.0	80.0
42"		–	–	70.0	70.0	80.0	80.0

SIDELITE OPTIONS

GLASS INSULATOR LIMITATIONS FOR SIDELITES WIDER THAN 37–1/8" ONLY.
90" & 96" HEIGHTS
FOR GLASS TYPES 'C2' & 'C3'
QUANEX DURASEAL & SUPERSPACER NOT ALLOWED
FOR GLASS TYPE 'C3'
CARDINAL XL (LIMIT MAX. LOADS TO ±70.0 PSF)

SIDELITE D.L.O. DIMS.
D.L.O. HEIGHT = FRAME HEIGHT – 12.875"
D.L.O. WIDTH = SIDELITE WIDTH – 6" STAND ALONE SIDELITE ONLY
D.L.O. WIDTH = SIDELITE WIDTH – 4.875 SIDELITE TO DOOR ONLY

NOTE:
THE FRAME AREA OF ALTERNATE SIZE MUST NOT EXCEED TESTED FRAME AREA = 110.3 SQ. FT.

FEB 1 5 2018

PRODUCT REVISED
as complying with the Florida Building Code
NOA-No. 17-1226.05
Expiration Date 08/08/2023
By
Miami-Dade Product Control

JAVAD AHMAD
LICENSE
No. 70592
STATE OF FLORIDA
PROFESSIONAL ENGINEER

AL-FAROOQ CORPORATION
ENGINEERS & PRODUCT DEVELOPMENT
9360 SUNSET DRIVE, SUITE 220
MIAMI, FLORIDA 33173 (C.A.N. 3538)
TEL. (305) 264-8100 FAX. (306) 262-6978

COMP–ANL\W13–01CGI

SERIES SENTINEL 160 ALUM OUTSWING DOOR (L.M.I./S.M.I.)

CGI Windows and Doors, Inc.
10100 N.W. 25TH STREET
MIAMI, FL. 33172
TEL. (305) 593–6590 FAX. (305) 593–6592

revisions:

no	date	by	description
C	05.14.15		NO CHANGE THIS SHEET
D	08.05.15		REV. PER RER COMMENTS
E	11.16.17		GENERAL REVISION
F	02.13.18		NO CHANGE THIS SHEET

date: 01–03–13
scale: 1/2"=1'–0"
dr. by: TARIQ
chk. by:

drawing no.
W13–01

DESIGN LOAD CAPACITY – PSF				
SIDELITE WIDTH INCHES	DOOR LEAF WIDTH INCHES	SIDELITE FRAME HEIGHT INCHES	SIDELITE TO DOOR MULLION (SEE NOTE BELOW)	
			EXT.(+)	INT.(–)
24	39–3/4	84	80.0	80.0
30			80.0	80.0
33			80.0	80.0
36			80.0	80.0
37–1/8			80.0	80.0
39			80.0	80.0
42			80.0	80.0
24	39–3/4	90	80.0	80.0
30			80.0	80.0
33			80.0	80.0
36			80.0	80.0
37–1/8			80.0	80.0
39			80.0	80.0
42			80.0	80.0
24	39–3/4	96	80.0	80.0
30			80.0	80.0
33			80.0	80.0
36			78.3	78.3
37–1/8			77.2	77.2
39			75.4	75.4
42			72.6	72.6

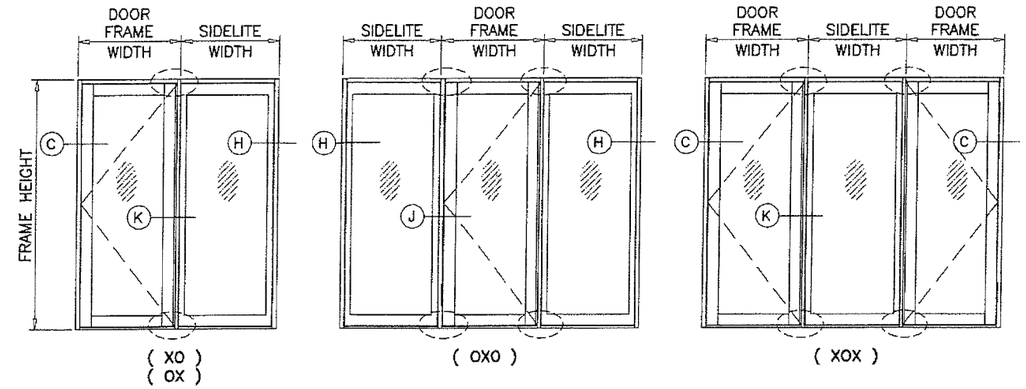

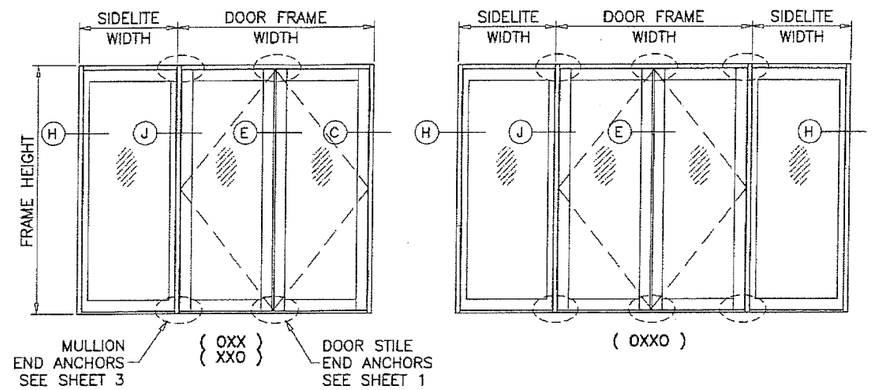

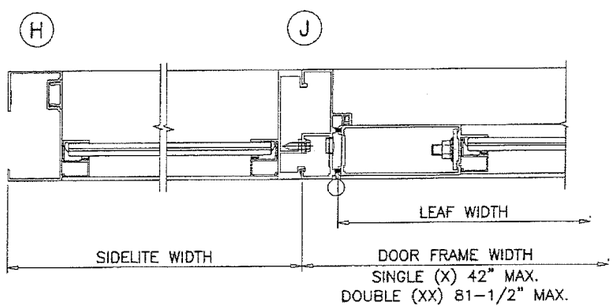

SIDELITE TO DOOR

NOTE:
FOR DOORS CAPACITY SEE SHEET 2
FOR SIDELITE CAPACITIES SEE SHEET 3.
FOR SIDELITE MULLION CAPACITY SEE CHART ABOVE
LOWER VALUES FROM DOORS, SIDELITE, DOOR/SIDELITE
OR DOOR/DOOR MULLION CHART WILL APPLY TO ENTIRE SYSTEM.

NOTE:
GLASS CAPACITIES ON THIS SHEET ARE
BASED ON ASTM E1300–09 (3 SEC. GUSTS)
AND FLORIDA BUILDING COMMISSION
DECLARATORY STATEMENT DCA05–DEC–219

PRODUCT REVISED
as complying with the Florida Building Code
NOA–No. 17-1226.05
Expiration Date 08/08/2023
By
Miami–Dade Product Control

FEB 1 5 2018

JAVAD AHMAD
LICENSE
No. 70592
STATE OF FLORIDA
PROFESSIONAL ENGINEER

AL-FAROOQ CORPORATION
ENGINEERS & PRODUCT DEVELOPMENT
9360 SUNSET DRIVE, SUITE 220
MIAMI, FLORIDA 33173 (C.A.N. 3538)
TEL. (305) 264-8100 FAX. (305) 262-6978

COMP–ANL\W13–01CGI

SERIES SENTINEL 160 ALUM OUTSWING DOOR (L.M.I./S.M.I.)

CGI Windows and Doors, Inc.
10100 N.W. 25TH STREET
MIAMI, FL. 33172
TEL. (305) 593–6590 FAX. (305) 593–6592

revisions:

no	date	by	description
C	05.14.15		NO CHANGE THIS SHEET
D	08.05.15		NO CHANGE THIS SHEET
E	11.16.17		GENERAL REVISION
F	02.13.18		REV. PER RER COMMENTS

date: 01–03–13
scale: 1/2"=1'–0"
dr. by: TARIQ
chk. by:

drawing no.
W13–01

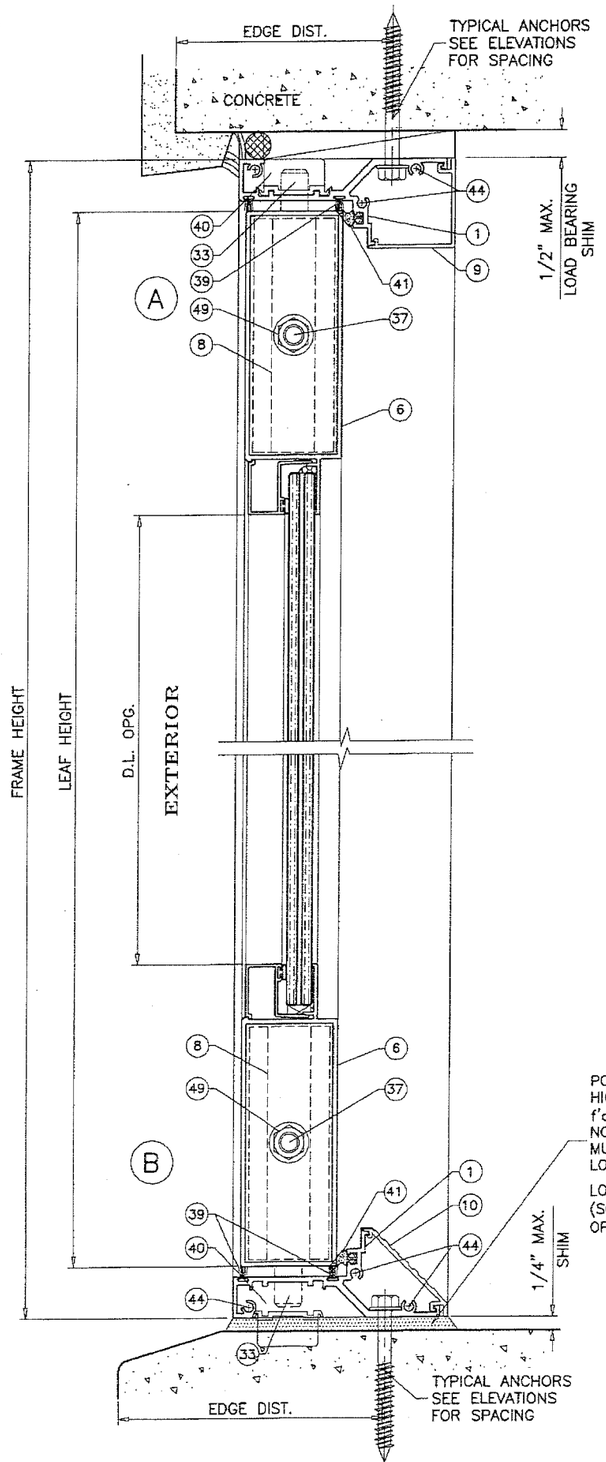

STANDARD THRESHOLD

APPROVED FOR WATER INFILTRATION RESISTANCE

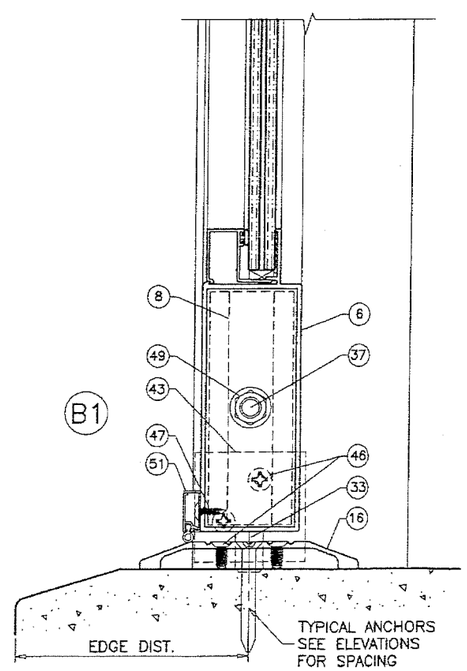

SADDLE (ADA) THRESHOLD

NOT APPROVED FOR WATER INFILTRATION RESISTANCE
LIMIT MAX. DESIGN LOADS TO ±70.0 PSF

DOOR DETAILS

PRODUCT REVISED
as complying with the Florida Building Code
NOA-No. 17-1226.05
Expiration Date 08/08/2023
By
Miami-Dade Product Control

FEB 1 5 2018

JAVAD AHMAD
LICENSE
No. 70592
STATE OF FLORIDA
PROFESSIONAL ENGINEER

AL-FAROOQ CORPORATION
ENGINEERS & PRODUCT DEVELOPMENT
9360 SUNSET DRIVE, SUITE 220
MIAMI, FLORIDA 33173 (C.A.N. 3538)
TEL. (305) 264-8100 FAX. (305) 262-6978
COMP-ANL\W13-01CGI

SERIES SENTINEL 160 ALUM OUTSWING DOOR (L.M.I./S.M.I.)

CGI Windows and Doors, Inc.
10100 N.W. 25TH STREET
MIAMI, FL. 33172
TEL. (305) 593-6590 FAX. (305) 593-6592

revisions:

no	date	by	description
C	05.14.15		REV. PER RER COMMENTS
D	08.05.15		REV. PER RER COMMENTS
E	11.16.17		GENERAL REVISION
F	02.13.18		NO CHANGE THIS SHEET

date: 01-03-13
scale: 3/8" = 1"
dr. by: TARIQ
chk. by:

drawing no.
W13-01

sheet 5 of 13

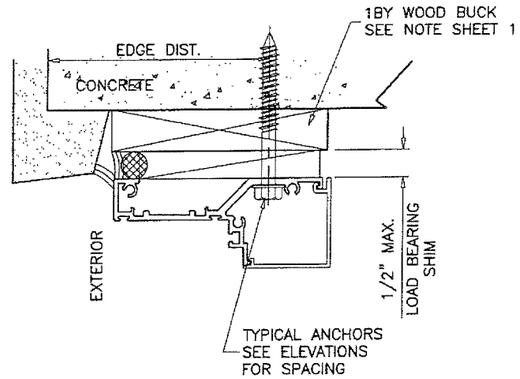

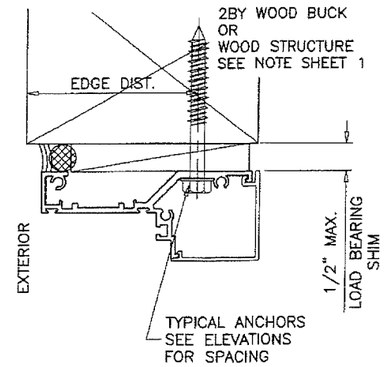

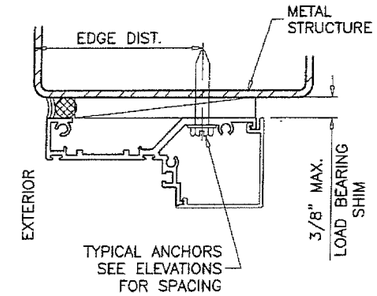

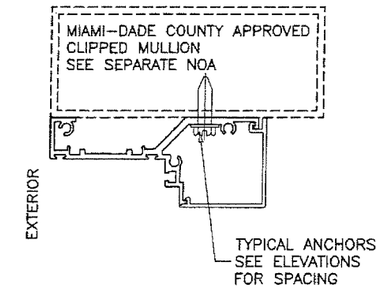

WOOD BUCKS AND METAL STRUCTURE NOT BY CGI WINDOWS
MUST SUSTAIN LOADS IMPOSED BY GLAZING SYSTEM
AND TRANSFER THEM TO THE BUILDING STRUCTURE.

TYPICAL ANCHORS: SEE ELEV. FOR SPACING

TYPE 'A'– 1/4" DIA. ULTRACON BY 'ELCO' (Fu=177 KSI, Fy=155 KSI)
MIN. LENGTH = 2–3/4"

INTO 2BY WOOD BUCKS OR WOOD STRUCTURES
1–1/2" MIN. PENETRATION INTO WOOD (HEAD/JAMBS)

THRU 1BY BUCKS INTO CONC. OR BLOCKS
1–3/4" MIN. EMBED INTO CONCRETE (HEAD)
1–1/4" MIN. EMBED INTO CONC. OR BLOCKS (JAMBS)

TYPE 'B'– 1/4" DIA. ULTRACON BY 'ELCO' (Fu=177 KSI, Fy=155 KSI)
MIN. LENGTH = 2–3/4"

DIRECTLY INTO CONC. OR BLOCKS
1–3/4" MIN. EMBED INTO CONCRETE (HEAD/SILL)
1–1/4" MIN. EMBED INTO CONC. OR BLOCKS (JAMBS)

TYPE 'C'– 1/4" DIA. TEKS OR SELF DRILLING SCREWS (GRADE 5 CRS)
INTO MIAMI–DADE COUNTY APPROVED MULLIONS
OR
INTO METAL STRUCTURES (HEAD/JAMBS)
(3) THREADS MIN. TO EXTEND BEYOND METAL THICKNESS
ALUMINUM: 1/8" THK. MIN. (6063–T5 MIN.)
STEEL: 1/8" THK. MIN. (Fy = 36 KSI MIN.)
(STEEL IN CONTACT WITH ALUMINUM TO BE PLATED OR PAINTED)

TYPICAL EDGE DISTANCE

INTO CONCRETE AND BLOCKS = 2–1/2" MIN.
INTO WOOD STRUCTURE = 1" MIN.
INTO METAL STRUCTURE = 3/4" MIN.

WOOD AT HEAD OR JAMBS SG = 0.55 MIN.
CONCRETE AT HEAD, SILL OR JAMBS f'c = 3000 PSI MIN.
C–90 HOLLOW/FILLED BLOCK AT JAMBS f'm = 2000 PSI MIN.

ANCHORS MAY BE HEX OR FLAT HEAD.

PRODUCT REVISED
as complying with the Florida Building Code
NOA-No. 17-1226.05
Expiration Date 08/08/2023
By
Miami-Dade Product Control

FEB 1 5 2018

JAVAD AHMAD
LICENSE
No. 70592
STATE OF FLORIDA
PROFESSIONAL ENGINEER

DOOR DETAILS

AL-FAROOQ CORPORATION
ENGINEERS & PRODUCT DEVELOPMENT
9360 SUNSET DRIVE, SUITE 220
MIAMI, FLORIDA 33173 (C.A.N. 3538)
TEL. (305) 264-8100 FAX. (305) 262-6978

COMP–ANL\W13–01CGI

SERIES SENTINEL 160 ALUM OUTSWING DOOR (L.M.I./S.M.I.)

CGI Windows and Doors, Inc.
10100 N.W. 25TH STREET
MIAMI, FL. 33172
TEL. (305) 593–6590 FAX. (305) 593–6592

revisions:

no	date	by	description
C	05.14.15		REV. PER RER COMMENTS
D	08.05.15		REV. PER RER COMMENTS
E	11.16.17		GENERAL REVISION
F	02.13.18		NO CHANGE THIS SHEET

date: 01–03–13
scale: 3/8" = 1"
dr. by: TARIQ
chk. by:

drawing no.
W13–01

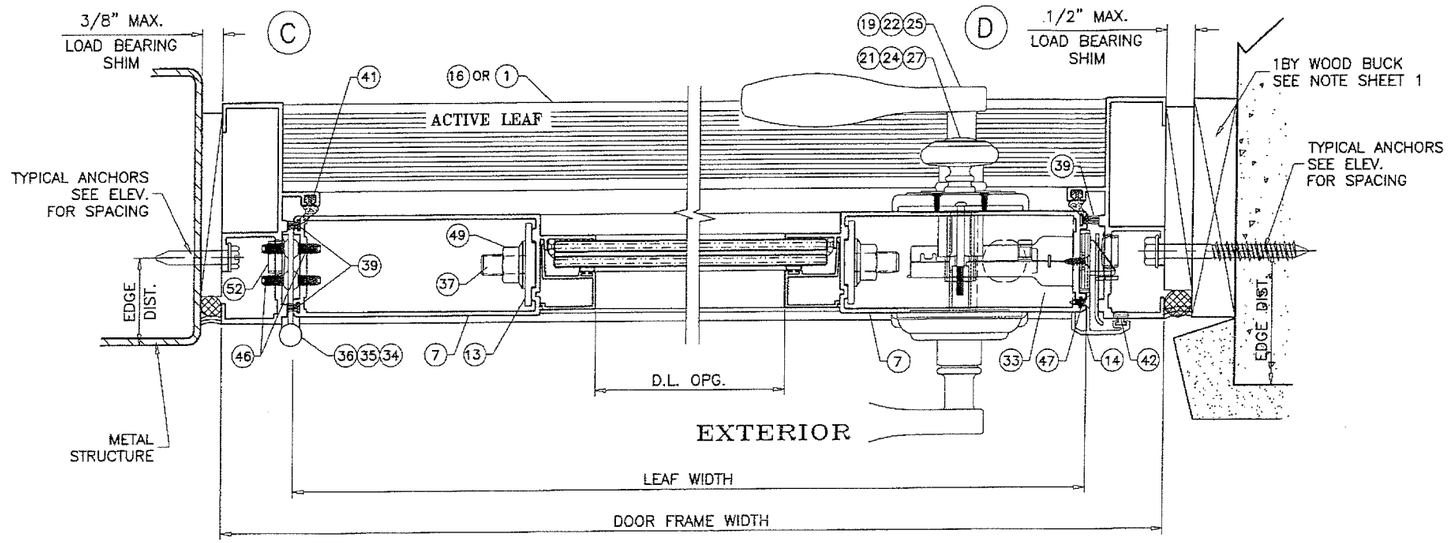

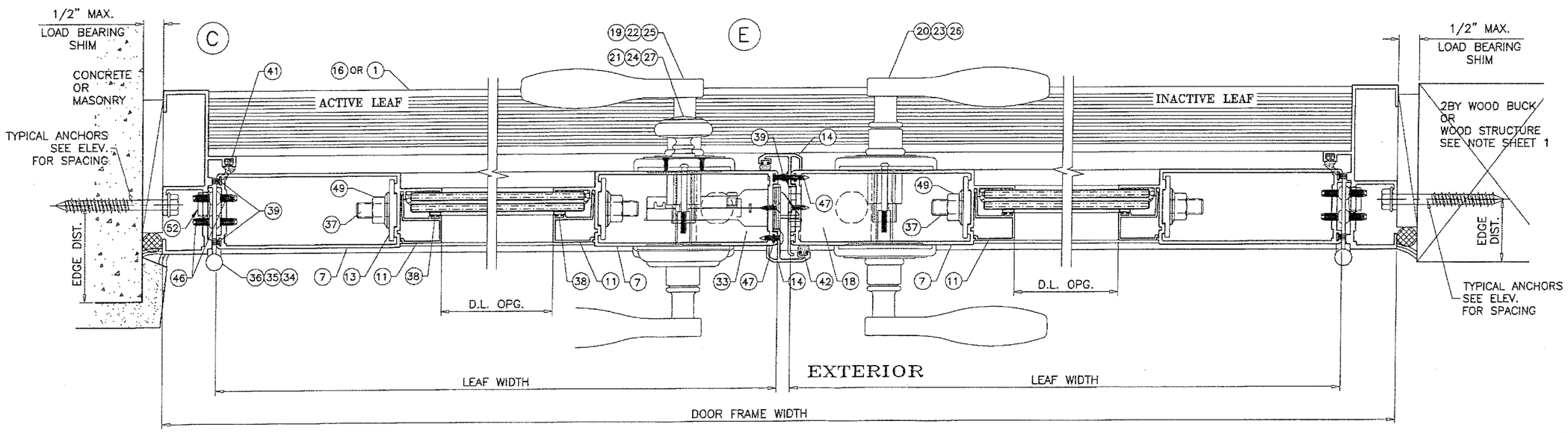

PRODUCT REVISED
as complying with the Florida Building Code
NOA-No. 17-1226.05
Expiration Date 08/08/2023
By
Miami-Dade Product Control

FEB 1 5 2018

JAVAD AHMAD
LICENSE
No. 70592
STATE OF FLORIDA
PROFESSIONAL ENGINEER

DOOR DETAILS

AL-FAROOQ CORPORATION
ENGINEERS & PRODUCT DEVELOPMENT
9360 SUNSET DRIVE, SUITE 220
MIAMI, FLORIDA 33173 (C.A.N. 3538)
TEL. (305) 264-8100 FAX. (305) 262-6978
COMP-ANL\W13-01CGI

SERIES SENTINEL 160 ALUM OUTSWING DOOR (L.M.I./S.M.I.)

CGI Windows and Doors, Inc.
10100 N.W. 25TH STREET
MIAMI, FL. 33172
TEL. (305) 593-6590 FAX. (305) 593-6592

revisions:

no	date	by	description
C	05.14.15		REV. PER RER COMMENTS
D	08.05.15		REV. PER RER COMMENTS
E	11.16.17		GENERAL REVISION
F	02.13.18		NO CHANGE THIS SHEET

date: 01-03-13
scale: 3/8" = 1"
dr. by: TARIQ
chk. by:

drawing no.
W13-01

sheet 7 of 13

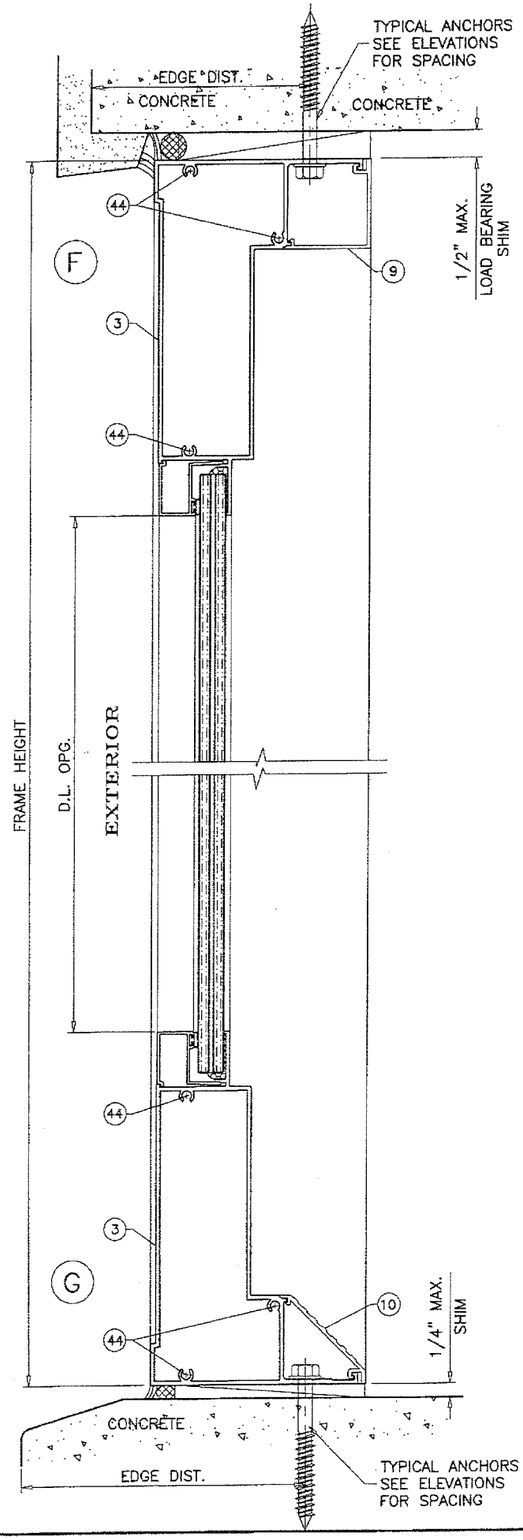

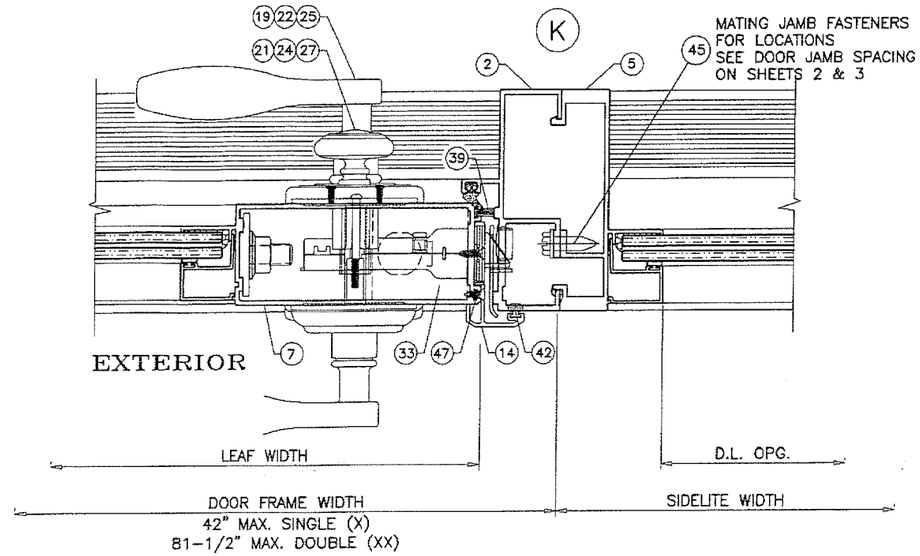

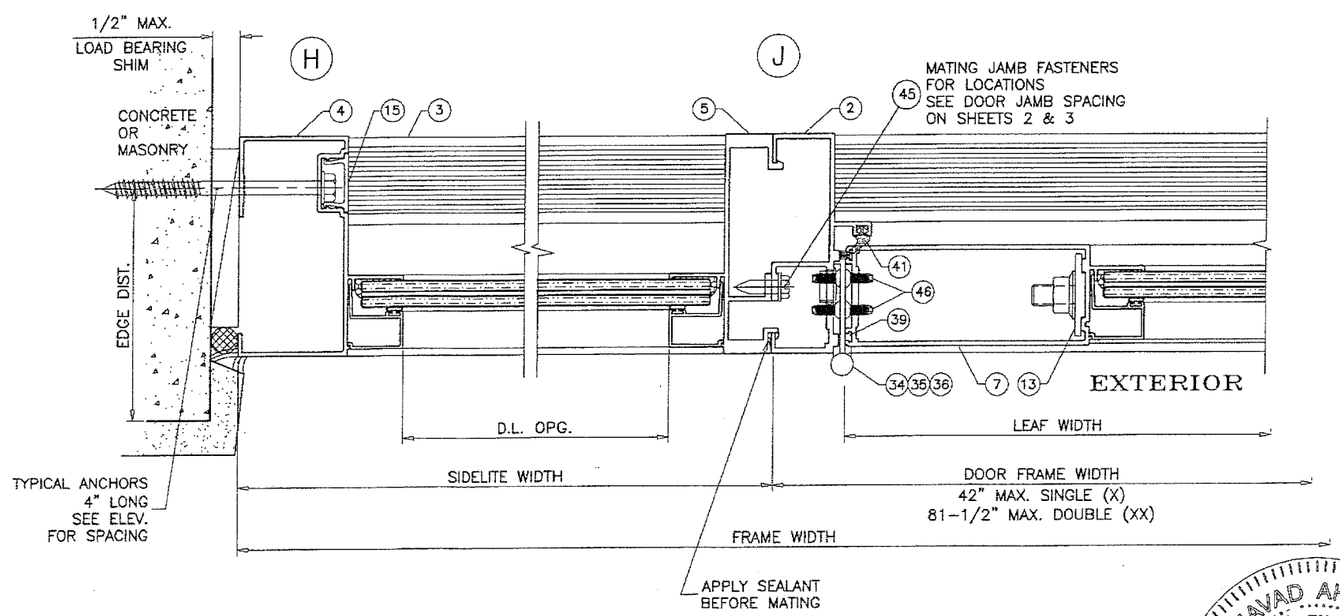

PRODUCT REVISED
as complying with the Florida Building Code
NOA-No. 17-1226.05
Expiration Date 08/08/2023
By
Miami-Dade Product Control

FEB 1 5 2018

NOTE: LIMIT SHIM TO METAL STRUCTURE AT JAMBS TO 3/8"

SIDELITE DETAILS

JAVAD AHMAD
LICENSE
No. 70592
STATE OF FLORIDA
PROFESSIONAL ENGINEER

AL-FAROOQ CORPORATION
ENGINEERS & PRODUCT DEVELOPMENT
9360 SUNSET DRIVE, SUITE 220
MIAMI, FLORIDA 33173 (C.A.N. 3538)
TEL. (305) 264-8100 FAX. (305) 262-6978

COMP-ANL\W13-01CGI

SERIES SENTINEL 160 ALUM OUTSWING DOOR (LMI./S.M.I.)

CGI Windows and Doors, Inc.
10100 N.W. 25TH STREET
MIAMI, FL. 33172
TEL. (305) 593-6590 FAX. (305) 593-6592

revisions:

no.	date	by	description
C	05.14.15		NO CHANGE THIS SHEET
D	08.05.15		REV. PER RER COMMENTS
E	11.16.17		GENERAL REVISION
F	02.13.18		REV. PER RER COMMENTS

date: 01-03-13
scale: 3/8" = 1"
dr. by: TARIQ
chk. by:

drawing no.
W13-01

ITEM	PART No.	QUANTITY	DESCRIPTION		MATERIAL	MFG. / REMARKS
1	AL-189	AS REQD.	FRAME HEAD & SILL		6063-T6	KEYMARK / SAPA
2	AL-190	AS REQD.	FRAME JAMB		6063-T6	KEYMARK / SAPA
3	AL-196	AS REQD.	SIDELITE HEAD & SILL		6063-T6	KEYMARK / SAPA
4	AL-197	AS REQD.	FREE STANDING SIDELITE JAMB		6063-T6	KEYMARK / SAPA
5	AL-198	AS REQD.	MATING SIDELITE JAMB		6063-T6	KEYMARK / SAPA
6	AL-193	AS REQD.	PANEL TOP & BOTTOM		6063-T6	KEYMARK / SAPA
7	AL-194	AS REQD.	PANEL VERTICAL STILE		6063-T6	KEYMARK / SAPA
8	AL-199	AS REQD.	SHEAR BLOCK		6063-T6	KEYMARK / SAPA
9	AL-191	AS REQD.	FRAME HEAD & SILL SCREW COVER		6063-T5	KEYMARK / SAPA
10	AL-192	AS REQD.	FRAME HEAD & SILL SLANTED SCREW COVER		6063-T5	KEYMARK / SAPA
11	AL-121	AS REQD.	GLAZING BEAD (7/16" LAM.)		6063-T5	KEYMARK / SAPA
12	AL-123	AS REQD.	GLAZING BEAD (1.000" INSUL.-LAM.)		6063-T5	KEYMARK / SAPA
13	AL-200	AS REQD.	SHEAR PLATE		6063-T6	KEYMARK / SAPA
14	AL-195	AS REQD.	ASTRAGAL		6063-T5	KEYMARK / SAPA
15	AL-508	AS REQD.	FREE STAND JAMB SCREW COVER		6063-T5	KEYMARK / SAPA
16	AL-540	AS REQD.	SADDLE THRESHOLD (ADA COMPLIANT)		6063-T6	KEYMARK / SAPA
17	HD-4503PL	AS REQD.	THREE POINT LOCK ASSY. (AT ACTIVE PANEL, USED BY ALL OPTIONS)		METAL	CGI PROPRIETARY
18	HD-1204	AS REQD.	FLUSHBOLT ASSEMBLY (AT INACTIVE PANEL, USED BY ALL OPTIONS)		ALLOY, STEEL	CGI PROPRIETARY
19	HD-5455 PASS	AS REQD.	LEVER LATCH LOCK, AT ACTIVE PANEL	LOCK SET OPTION 1	BRASS	BALDWIN
20	HD-5455	AS REQD.	DUMMY LEVER, AT INACTIVE PANEL			
21	HD-8231	AS REQD.	DEADBOLT (THUMBTURN), AT ACTIVE PANEL			
22	J10 TOR605	AS REQD.	LEVER LATCH LOCK, AT ACTIVE PANEL	LOCK SET OPTION 2	BRASS	SCHLAGE
23	J10 TOR605	AS REQD.	DUMMY LEVER, AT INACTIVE PANEL			
24	JD60	AS REQD.	DEADBOLT (THUMBTURN), AT ACTIVE PANEL			
25	HD-34-10116	AS REQD.	LEVER LATCH LOCK, AT ACTIVE PANEL	LOCK SET OPTION 3	BRASS, STEEL	COPPER CREEK
26	HD-34-10116	AS REQD.	DUMMY LEVER, AT INACTIVE PANEL			
27	HD- DB2410	AS REQD.	DEADBOLT (THUMBTURN), AT ACTIVE PANEL			
28	HD-537	AS REQD.	LATCH LOCK STRIKE PLATE		S. STEEL	–
28A	–	2 /PLATE	#8 X 3/4" PHP. FH SMS (STRIKE PLATE ATTACHMENT)		S. STEEL	–
29	HD-538	AS REQD.	DEADBOLT STRIKE PLATE		S.STEEL	–
29A	–	2 /PLATE	#8 X 3/4" PHP. FH SMS (STRIKE PLATE ATTACHMENT)		S. STEEL	–
30	HD-536N	AS REQD.	LATCH LOCK STRIKE PLATE SHIM		NYLON	CGI
31	HD-390P	AS REQD.	LATCH LOCK & DEADBOLT STRIKE PLATE TRIM		NYLON	CGI
32	HD-STRIKE BOX	AS REQD.	LATCH LOCK & DEADBOLT PROTECTIVE DUST BOX		NYLON	CGI
33	HD-525-9-REV	2 /LOCK MECH.	BOLT LOCK ASSEMBLY		S. STEEL	CGI
33A	HD-533C	1 /FLUSHBOLT	FLUSH BOLT GUIDE (TOP & BOTTOM)		CAST (ZINC)	CGI
34	HD-CH-108	4 /LEAF	4-1/2" x 4" HINGE		ALUMINUM	CGI PROPRIETARY
35	HD-AB800-US32D	4 /LEAF	4-1/2" x 4" HINGE		BRASS	HAGER
36	HD-AB800-US	4 /LEAF	4-1/2" x 4" HINGE		S. STEEL	HAGER
37	ø3/8"-16 ROD	2 /LEAF	ø3/8"-16 FULLY THREADED ROD (ZINC PLATED)		STEEL	–
38	WS-382V	AS REQD.	GLAZING BULB (DUROMETER 75/80)		PVC	PROTOTYPE
39	WS-W33321	AS REQD.	.187" x 320" ULTRA SOFT FIN WEATHERSTRIP		–	ULTRAFAB
40	HD-203	2/LEAF	SHOOT BOLT PROTECTOR, AT DOOR FRAME HEAD & SILL		PVC	–
41	HD-12-10042	AS REQD.	.350" REACH POCKET SEAL (FRAME PERIMETER GASKET)		–	AMESBURY
42	WS-32011	AS REQD.	FOAM-TITE CLOSED CELL FOAM COMPRESSION SEAL		–	AMESBURY
43	HD-CLIP ANGLE	2 /EACH	2 x 2 x 1/4" CLIP ANGLE (ADA THRESHOLD TO JAMB ATTACHEMENT)		ALUMINUM	–
44	–	3 /CORNER	#10 x 1-1/4" PHP. PH. SMS. (PANEL & FRAME ASSEMBLY)		S. STEEL	–
45	–	SEE ELEV.	#14 x 3/4" HH. TEK (MULLION ATTACHMENT)		S. STEEL	–
46	–	8/HINGE , 4/CLIP	#12-24 x 1/2" PHP. FH. UC. THREAD FORMING		S. STEEL	–
47	–	2/EACH	#6 x 1/2" PHP. TH. SMS. (ASTRAGAL ATTACHMENT)		S. STEEL	–
48	–	1/EACH	#10 x 3/4" PHP. PH. SMS. (BOLT LOCK / FLUSHBOLT GUIDE ASSY.)		S. STEEL	–
49	ø3/8"-16 NUT	4 /LEAF	ø3/8"-16 SERRATED-FLANGE NUT (ZINC PLATED)		STEEL	–
50	–	2 /FLUSHBOLT	#8-32 x 1/2" PHP. PH. MS. (FLUSHBOLT ASSEMBLY)		S. STEEL	–
51	HD-DOOR SWEEP	1/EACH	DOOR SWEEP (OPTIONAL), SECURED W/ #6 x 1/2" PHP. PH. SMS.		ALUMINUM	SCREEN TECH
52	HD-34-10003	1 /SCREW HOLE	INSTALLATION SCREW HOLE PLUG (AT DOOR FRAME JAMBS ONLY)		NYLON	–
53	–	2/ LITE	SETTING BLOCKS		EPDM	DUROMETER 80±5 SHORE A

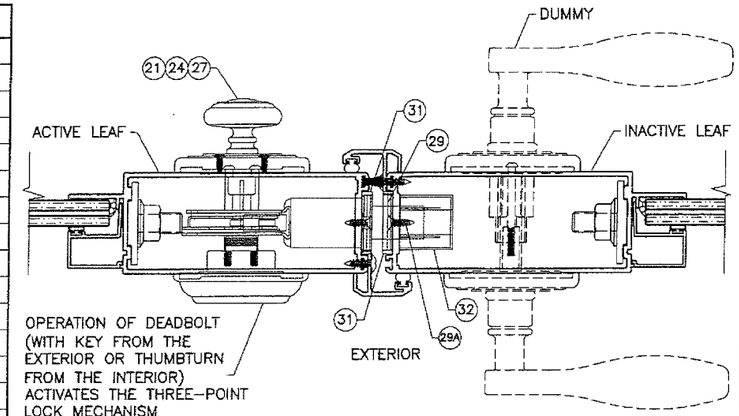

SECTION AT DEADBOLT LOCK

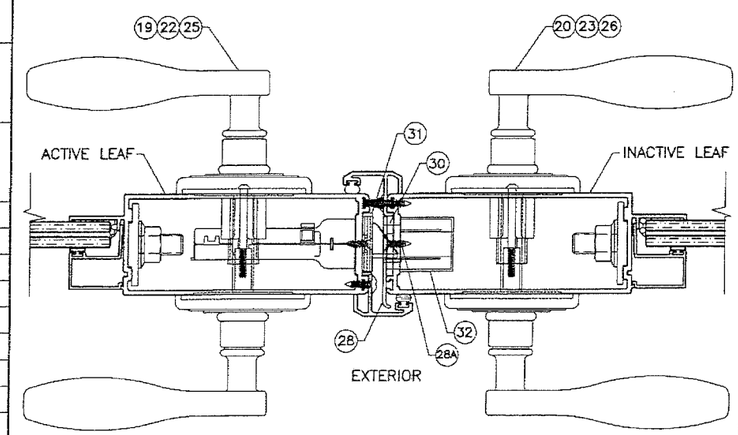

SECTION AT LEVER LATCH LOCK

SEALANTS:

ALL JOINTS AND FRAME CONNECTIONS SEALED WITH GE SCS2000 SILICONE SEALANT.

PRODUCT REVISED
as complying with the Florida Building Code
NOA-No. 17-1226.05
Expiration Date 08/08/2023
By
Miami-Dade Product Control

FEB 1 5 2018

JAVAD AHMAD
LICENSE
No. 70582
STATE OF FLORIDA
PROFESSIONAL ENGINEER

AL-FAROOQ CORPORATION
ENGINEERS & PRODUCT DEVELOPMENT
9360 SUNSET DRIVE, SUITE 220
MIAMI, FLORIDA 33173
(C.A.N. 3538)
TEL. (305) 264-8100 FAX. (305) 262-6978

COMP-ANL\W13-01CGI

SERIES SENTINEL 160 ALUM OUTSWING DOOR (L.M./S.M.I.)

CGI Windows and Doors, Inc.
10100 N.W. 25TH STREET
MIAMI, FL. 33172
TEL. (305) 593-6590 FAX. (305) 593-6592

revisions:

no	date	by	description
C	05.14.15		NO CHANGE THIS SHEET
D	08.05.15		NO CHANGE THIS SHEET
E	11.16.17		GENERAL REVISION
F	02.13.18		REV. PER RER COMMENTS

date: 01-03-13
scale: 3/8" = 1"
dr. by: TARIQ
chk. by:

drawing no.
W13-01

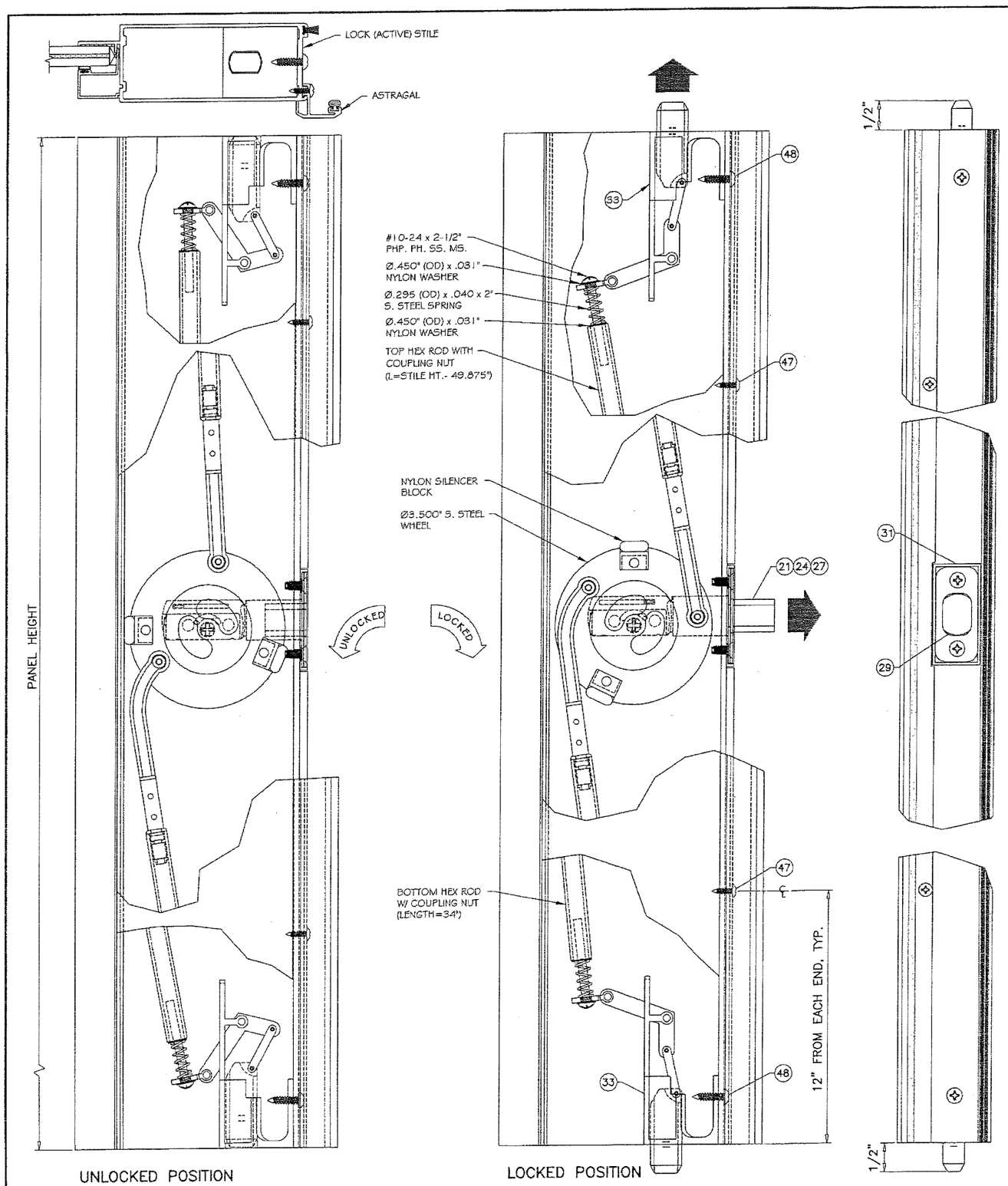

PRODUCT REVISED
as complying with the Florida Building Code
NOA-No. 17-1226.05
Expiration Date 08/08/2023
By
Miami-Dade Product Control

FEB 1 5 2018

JAVAD AHMAD
LICENSE
No. 70592
STATE OF FLORIDA
PROFESSIONAL ENGINEER

AL-FAROOQ CORPORATION
ENGINEERS & PRODUCT DEVELOPMENT
9360 SUNSET DRIVE, SUITE 220
MIAMI, FLORIDA 33173 (C.A.N. 3538)
TEL. (305) 264-8100 FAX. (305) 262-6978

COMP-ANL\W13-01CGI

SERIES SENTINEL 160 ALUM OUTSWING DOOR (L.M.I./S.M.I.)

CGI Windows and Doors, Inc.
10100 N.W. 25TH STREET
MIAMI, FL. 33172
TEL. (305) 593-6590 FAX. (305) 593-6592

revisions:

no	date	by	description
C	05.14.15		NO CHANGE THIS SHEET
D	08.05.15		NO CHANGE THIS SHEET
E	11.16.17		GENERAL REVISION
F	02.13.18		NO CHANGE THIS SHEET

date: 01-03-13
scale: 3/8" = 1"
dr. by: TARIQ
chk. by:

drawing no.
W13-01

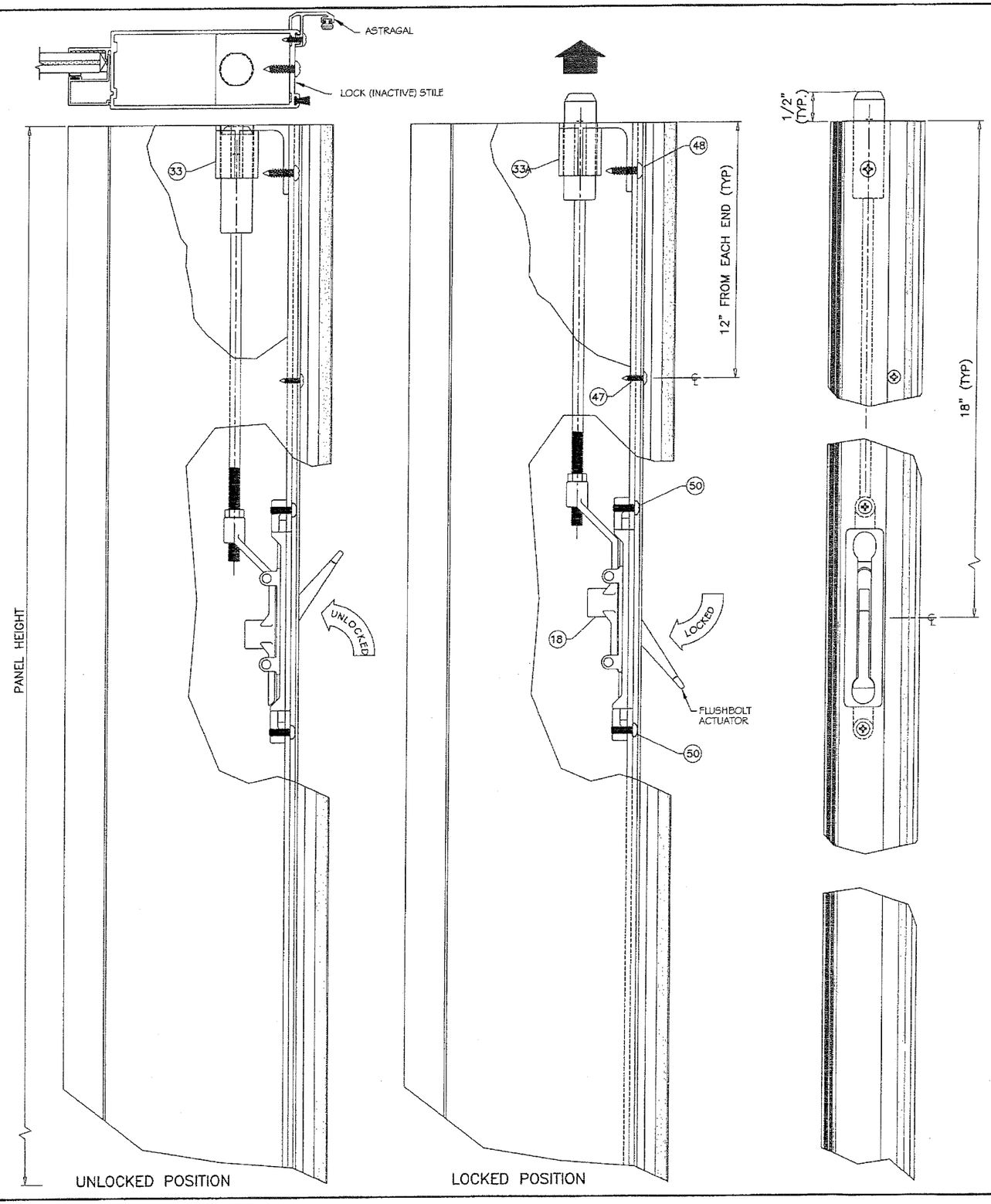

PRODUCT REVISED
as complying with the Florida Building Code
NOA-No. 17-1226.05
Expiration Date 08/08/2023
By
Miami-Dade Product Control

NOTE:
FLUSH BOLT AT INACTIVE STILE
(PARTIAL TOP END SECTION SHOWN, BOTTOM END SIMILAR)

FEB 1 5 2018

JAVAD AHMAD
LICENSE
No. 70592
STATE OF FLORIDA
PROFESSIONAL ENGINEER

AL-FAROOQ CORPORATION
ENGINEERS & PRODUCT DEVELOPMENT
9360 SUNSET DRIVE, SUITE 220
MIAMI, FLORIDA 33173 (C.A.N. 3538)
TEL. (305) 264-8100 FAX. (305) 262-6978

COMP-ANL\W13-01CGI

SERIES SENTINEL 160 ALUM OUTSWING DOOR (L.M.I./S.M.I.)

CGI Windows and Doors, Inc.
10100 N.W. 25TH STREET
MIAMI, FL. 33172
TEL. (305) 593-6590 FAX. (305) 593-6592

revisions:

no	date	by	description
C	05.14.15		NO CHANGE THIS SHEET
D	08.05.15		NO CHANGE THIS SHEET
E	11.16.17		GENERAL REVISION
F	02.13.18		NO CHANGE THIS SHEET

date: 01-03-13
scale: 3/8" = 1"
dr. by: TARIQ
chk. by:

drawing no.
W13-01

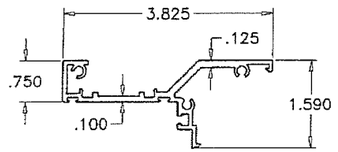

1 DOOR FRAME HEAD/SILL

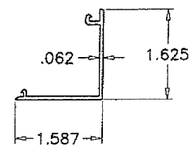

9 FRAME COVER

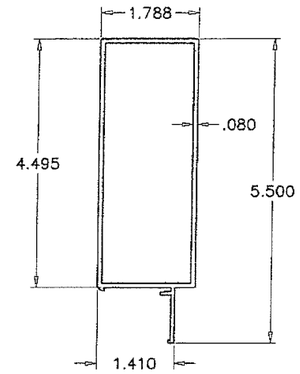

6 TOP & BOTTOM RAIL

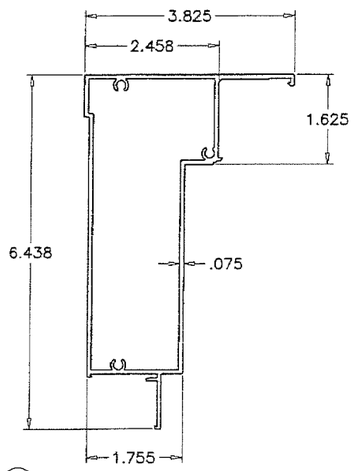

3 SIDELITE TOP & BOTTOM FRAME

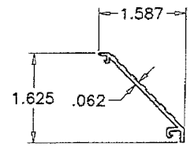

10 SILL COVER

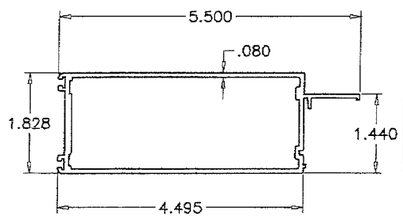

7 HINGE & LOCK STILE

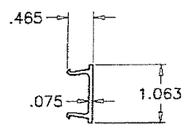

15 SIDELITE JAMB COVER

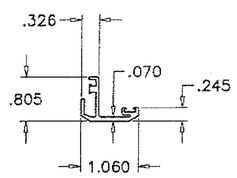

14 ASTRAGAL ADAPTER

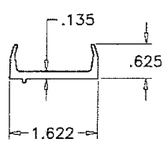

8 SHEAR BLOCK

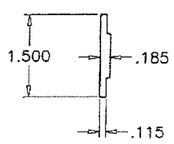

13 SHEAR BLOCK PLATE

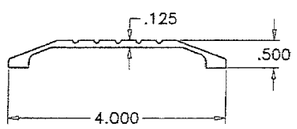

16 SADDLE THRESHOLD

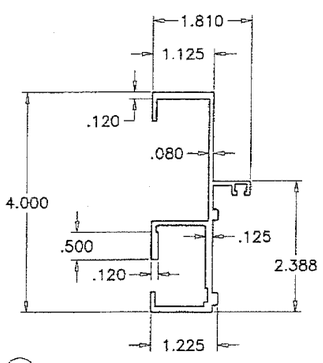

2 DOOR FRAME JAMB

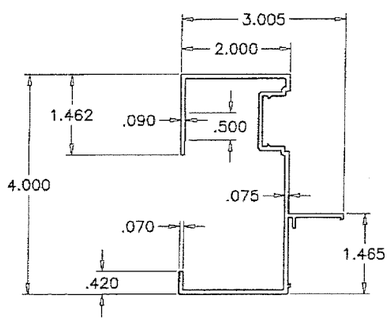

4 SIDELITE FRAME JAMB

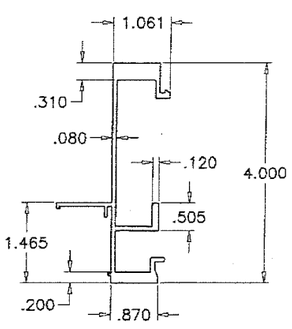

5 SIDELITE MATING JAMB

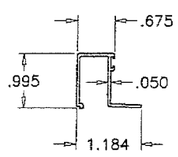

11 GLASS STOP (LAM. GLASS)

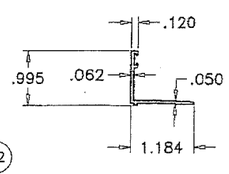

12 GLASS STOP (INSUL. LAM. GLASS)

PRODUCT REVISED
as complying with the Florida Building Code
NOA-No. 17-1226.05
Expiration Date 08/08/2023
By
Miami-Dade Product Control

FEB 1 5 2018

JAVAD AHMAD
LICENSE
No. 70582
STATE OF FLORIDA
PROFESSIONAL ENGINEER

AL-FAROOQ CORPORATION
ENGINEERS & PRODUCT DEVELOPMENT
9360 SUNSET DRIVE, SUITE 220
MIAMI, FLORIDA 33173 (C.A.N. 3538)
TEL. (305) 264-8100 FAX. (305) 262-6978

COMP-ANL\W13-01CGI

SERIES SENTINEL 160 ALUM OUTSWING DOOR (L.M.I./S.M.I.)

CGI Windows and Doors, Inc.
10100 N.W. 25TH STREET
MIAMI, FL. 33172
TEL. (305) 593-6590 FAX. (305) 593-6592

revisions:

no	date	by	description
C	05.14.15		REV. PER RER COMMENTS
D	08.05.15		NO CHANGE THIS SHEET
E	11.16.17		GENERAL REVISION
F	02.13.18		REV. PER RER COMMENTS

date: 01-03-13
scale: 3/8" = 1"
dr. by: TARIQ
chk. by:

drawing no.
W13-01

sheet 12 of 13

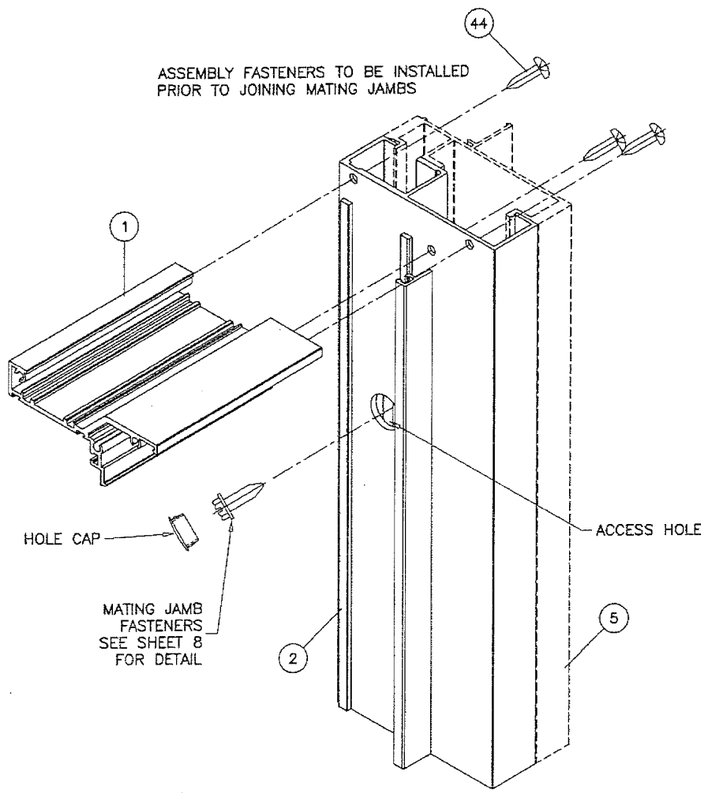

DOOR FRAME TOP & BOTTOM CORNER

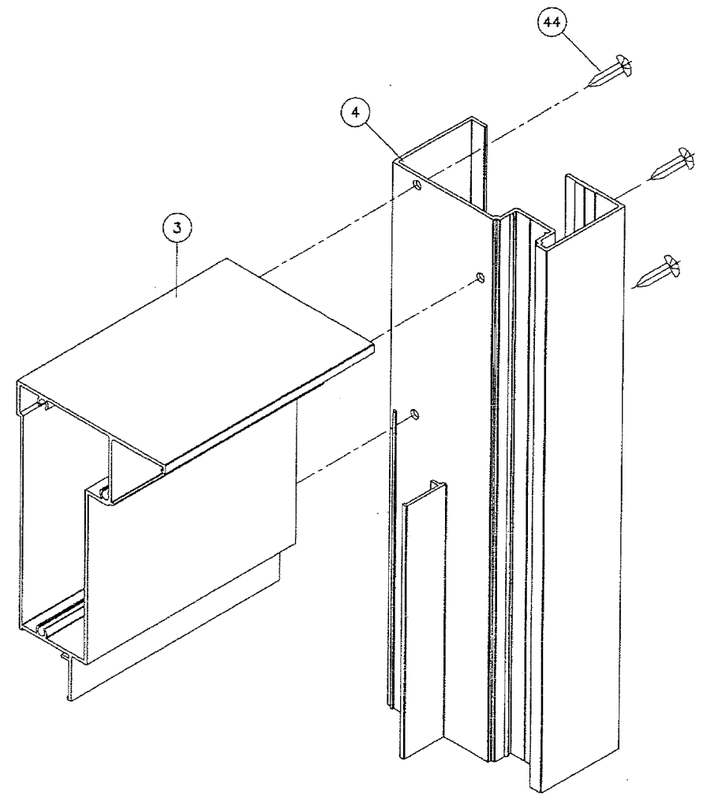

SIDELITE JAMB CORNER
TOP & BOTTOM

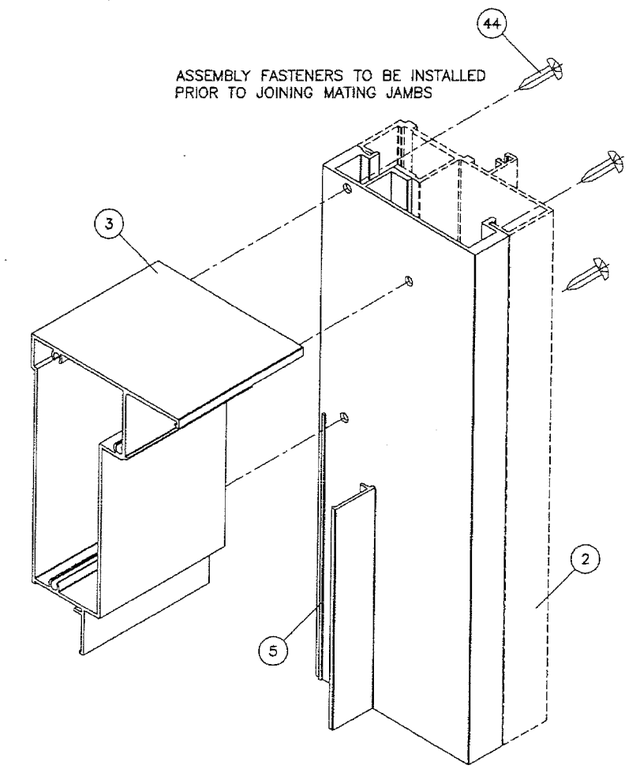

SIDELITE MATING JAMB CORNER
TOP & BOTTOM

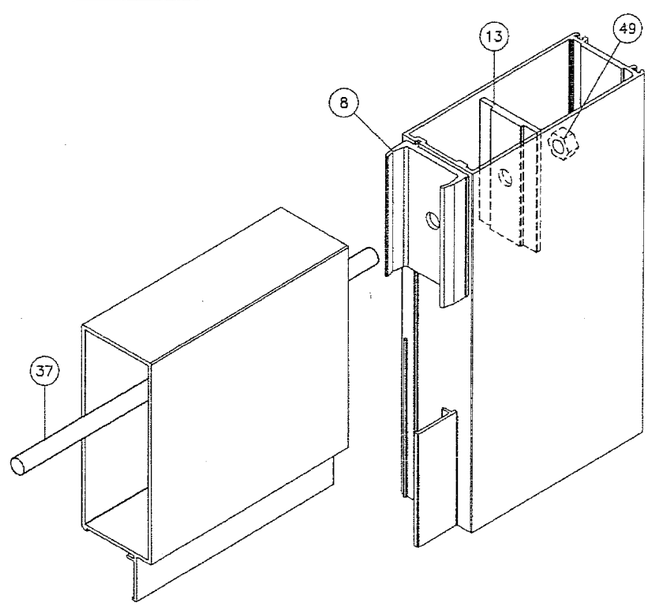

LEAF TOP & BOTTOM CORNER

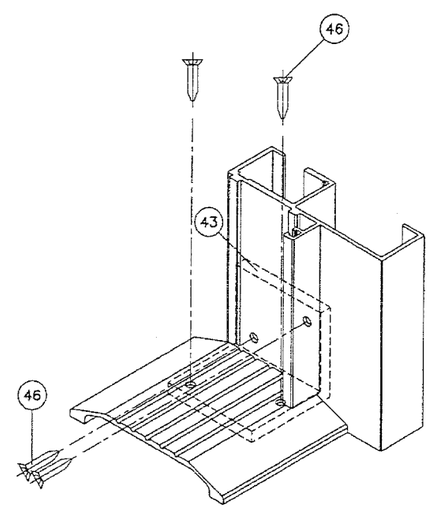

SADDLE THRESHOLD CORNER

PRODUCT REVISED
as complying with the Florida Building Code
NOA-No. 17-1226.05
Expiration Date 08/08/2023
By
Miami-Dade Product Control

FEB 1 5 2018

JAVAD AHMAD
LICENSE
No. 70592
STATE OF FLORIDA
PROFESSIONAL ENGINEER

AL-FAROOQ CORPORATION
ENGINEERS & PRODUCT DEVELOPMENT
9360 SUNSET DRIVE, SUITE 220
MIAMI, FLORIDA 33173 (C.A.N. 3538)
TEL. (305) 264-8100 FAX. (305) 262-6978

COMP-ANL\W13-01CGI

SERIES SENTINEL 160 ALUM OUTSWING DOOR (L.M.I./S.M.I.)

CGI Windows and Doors, Inc.
10100 N.W. 25TH STREET
MIAMI, FL. 33172
TEL. (305) 593-6590 FAX. (305) 593-6592

revisions:

no	date	by	description
C	05.14.15		NO CHANGE THIS SHEET
D	08.05.15		NO CHANGE THIS SHEET
E	11.16.17		GENERAL REVISION
F	02.13.18		NO CHANGE THIS SHEET

date: 01-03-13
scale: 3/8" = 1"
dr. by: TARIQ
chk. by:

drawing no.
W13-01