MIAMI-DADE COUNTY
DEPARTMENT OF REGULATORY AND ECONOMIC RESOURCES (RER)
BOARD AND CODE ADMINISTRATION DIVISION

MIAMI-DADE COUNTY
PRODUCT CONTROL SECTION
11805 SW 26 Street, Room 208
T (786) 315-2590 F (786) 315-2599
www.miamidade.gov/economy

NOTICE OF ACCEPTANCE (NOA)

Sunshine Windows Manufacturing, Inc.
1745 W. 33rd Place
Hialeah, FL 33012

SCOPE:

This NOA is being issued under the applicable rules and regulations governing the use of construction materials. The documentation submitted has been reviewed and accepted by Miami-Dade County RER-Product Control Section to be used in Miami-Dade County and other areas where allowed by the Authority Having Jurisdiction (AHJ).

This NOA shall not be valid after the expiration date stated below. The Miami-Dade County Product Control Section (In Miami-Dade County) and/ or the AHJ (in areas other than Miami-Dade County) reserve the right to have this product or material tested for quality assurance purposes. If this product or material fails to perform in the accepted manner, the manufacturer will incur the expense of such testing and the AHJ may immediately revoke, modify, or suspend the use of such product or material within their jurisdiction. RER reserves the right to revoke this acceptance, if it is determined by Miami–Dade County Product Control Section that this product or material fails to meet the requirements of the applicable building code.

This product is approved as described herein, and has been designed to comply with the Florida Building Code, including the High Velocity Hurricane Zone.-

DESCRIPTION: Series "4230" Aluminum Fixed Window – N.I.

APPROVAL DOCUMENT: Drawing No. **PW08-01** (previously PW08–02), titled "Series 4230 Aluminum Fixed Window Non-Impact Resistant Glass", sheets 1 through 4 of 4, dated 11/20/08, with revision **#4**, dated 12/10/17, prepared by manufacturer, signed and sealed by Francisco Hernandez, P.E., bearing the Miami–Dade County Product Control Revision stamp with the Notice of Acceptance number and expiration date by the Miami-Dade County Product Control Section.

MISSILE IMPACT RATING: None.

LIMITATION: Installation into masonry shall be limited to filled blocks.

LABELING: Each unit shall bear a permanent label with the manufacturer's name or logo, city, state, model/ series, and following statement: "Miami-Dade County Product Control Approved", unless otherwise noted herein.

RENEWAL of this NOA shall be considered after a renewal application has been filed and there has been no change in the applicable building code negatively affecting the performance of this product.

TERMINATION of this NOA will occur after the expiration date or if there has been a revision or change in the materials, use, and/ or manufacture of the product or process. Misuse of this NOA as an endorsement of any product, for sales, advertising or any other purposes shall automatically terminate this NOA. Failure to comply with any section of this NOA shall be cause for termination and removal of NOA.

ADVERTISEMENT: The NOA number preceded by the words Miami-Dade County, Florida, and followed by the expiration date may be displayed in advertising literature. If any portion of the NOA is displayed, then it shall be done in its entirety.

INSPECTION: A copy of this entire NOA shall be provided to the user by the manufacturer or its distributors and shall be available for inspection at the job site at the request of the Building Official.

This NOA **revises and renews NOA No. 15-0302.04** and consists of this page 1 and evidence pages E-1, E-2 and E-3, as well as approval document mentioned above.

The submitted documentation was reviewed by **Manuel Perez, P.E.**

MIAMI-DADE COUNTY APPROVED

3/12/18

Sunshine Windows Manufacturing, Inc.

NOTICE OF ACCEPTANCE: EVIDENCE SUBMITTED

1. EVIDENCE SUBMITTED UNDER PREVIOUS NOA's

A. DRAWINGS

1. Manufacturer's die drawings and sections.
   (Submitted under NOA No. 96-0512.04 and 08-0908.18)
2. Drawing No. **PW08-01** (previously PW08–02), titled "Series 4230 Aluminum Fixed Window Non-Impact Resistant Glass", sheets 1 through 4 of 4, dated 11/20/08, with revision #**3** dated 06/26/16, prepared by manufacturer, signed and sealed by Francisco Hernandez, P.E.

B. TESTS

1. Test reports on: 1) Air Infiltration Test, per FBC, TAS 202-94
   2) Uniform Static Air Pressure Test, Loading per FBC, TAS 202-94
   3) Water Resistance Test, per FBC, TAS 202-94
   4) Forced Entry Test, per FBC 2411.3.2.1, and TAS 202-94

   along with marked-up drawings and installation diagram of an aluminum fixed window, prepared by Fenestration Testing Laboratory, Inc., Test Report No. **FTL-5614**, dated 07/12/08, signed and sealed by Carlos S. Rionda, P.E.
   (Submitted under NOA No. 08-0908.18)
2. Test reports on: 1) Air Infiltration Test, per FBC, TAS 202-94
   2) Uniform Static Air Pressure Test, Loading per FBC, TAS 202-94
   3) Water Resistance Test, per FBC, TAS 202-94

   along with marked-up drawings and installation diagram of an aluminum fixed window, prepared by Fenestration Testing Laboratory, Inc., Test Reports No. **FTL-1419**, **FTL-1420** and **FTL-1421**, dated 04/02/96 and 04/16/96, all signed and sealed by Gilbert Diamond, P.E.
   (Submitted under NOA No. 96-0512.04)

C. CALCULATIONS

1. Anchor verification calculations and structural analysis, complying with **FBC 5th Edition (2014)** and **AAMA/WDMA/CSA101/I.S.2/A440**, dated 02/19/15 and revised on 06/10/16, prepared, signed and sealed by Francisco Hernandez, P.E.
   (Submitted under NOA No. 15-0302.04)
2. Glazing complies with **ASTM E1300-04/ 09**

D. QUALITY ASSURANCE

1. Miami-Dade Department of Regulatory and Economic Resources (RER).

E. MATERIAL CERTIFICATIONS

1. None.

Manuel Perez, P.E.
Product Control Examiner
NOA No. 17–1226.19
Expiration Date: September 16, 2023
Approval Date: February 15, 2018

NOTICE OF ACCEPTANCE: EVIDENCE SUBMITTED

F. STATEMENTS

1. Statement letter of conformance, complying with **FBC 5th Edition (2014)** and with **AAMA/WDMA/CSA101/I.S.2/A440** and of no financial interest, dated 02/19/15, issued, signed and sealed by Francisco Hernandez, P.E.
2. Laboratory compliance letter for Test Report No. **FTL-5614**, issued by Fenestration Testing Laboratory, Inc., dated 07/12/08, signed and sealed by Carlos S. Rionda, P. E.
   (Submitted under NOA No. 08-0908.18)
3. Laboratory compliance letter for Test Report No. **FTL-5614**, all issued by Fenestration Testing Laboratory, Inc., dated 07/12/08, signed and sealed by Carlos S. Rionda, P. E.
   (Submitted under NOA No. 08-0908.18)
4. Laboratory compliance letter for Test Reports No.'s **FTL-1419**, **FTL-420** and **FTL-1421**, all issued by Fenestration Testing Laboratory, Inc., dated 04/02/96 and 04/16/96, signed and sealed by Gilbert Diamond, P.E.
   (Submitted under NOA No. 96-0512.04)

G. OTHERS

1. Notice of Acceptance No. **13-0416.15**, issued to Sunshine Windows Manufacturing, Inc. for their Series "4320 Aluminum Fixed Window – N. I.", approved on 07/04/13 and expiring on 09/16/18.

Manuel Perez

Manuel Perez, P.E.
Product Control Examiner
NOA No. 17–1226.19
Expiration Date: September 16, 2023
Approval Date: February 15, 2018

NOTICE OF ACCEPTANCE: EVIDENCE SUBMITTED

2. NEW EVIDENCE SUBMITTED

A. DRAWINGS

1. Drawing No. **PW08-01** (previously PW08-02), titled "Series 4230 Aluminum Fixed Window Non-Impact Resistant Glass", sheets 1 through 4 of 4, dated 11/20/08, with revision #**4** dated 12/10/17, prepared by manufacturer, signed and sealed by Francisco Hernandez, P.E.

B. TESTS

1. None

C. CALCULATIONS

1. None.

D. QUALITY ASSURANCE

1. Miami-Dade Department of Regulatory and Economic Resources (RER)

E. MATERIAL CERTIFICATIONS

1. None.

F. STATEMENTS

1. Statement letter of conformance, complying with **FBC 6th Edition (2017)**, dated December 8, 2017, issued, signed and sealed by Francisco Hernandez, P.E.

G. OTHERS

1. Notice of Acceptance No. **15-0302.04**, issued to Sunshine Windows Manufacturing, Inc. for their Series "4320" Aluminum Fixed Window – N.I., approved on 07/07/16 and expiring on 09/16/18.

Manuel Perez, P.E.
Product Control Examiner
NOA No. 17–1226.19
Expiration Date: September 16, 2023
Approval Date: February 15, 2018

DESIGN PRESSURES CHART - PSF

WINDOW SIZE L X S INCHES	NUMBER OF ANCHORS		3/16" TEMPERED GLASS		1/4" ANNEALED GLASS	
	LONG SIDE	SHORT SIDE	POS.	NEG.	POS.	NEG.
120 X 40	13	5	72.07	72.07	–	–
120 X 37	13	4	76.76	76.76	–	–
120 X 26	13	3	100.00	103.63	70.70	70.70
108 X 46	11	5	62.39	62.39	–	–
108 X 40	11	5	69.30	69.30	–	–
108 X 37	11	4	73.66	73.66	35.00	35.00
108 X 26	11	3	98.76	98.76	72.70	72.70
96 X 50	10	6	62.47	62.47	–	–
96 X 46	10	5	66.04	66.04	–	–
96 X 40	10	5	72.95	72.95	34.10	34.10
96 X 37	10	4	77.34	77.34	37.70	37.70
96 X 26	10	3	100.00	102.76	75.20	75.20
91 X 54	10	6	64.17	64.17	–	–
91 X 50	10	6	67.20	67.20	–	–
91 X 46	10	5	70.90	70.90	–	–
91 X 40	10	5	78.08	78.08	36.20	36.20
91 X 37	10	4	82.67	82.67	39.20	39.20
91 X 26	10	3	100.00	109.35	76.40	76.40
91 X 19	10	3	100.00	143.21	90.00	100.48
84 X 58	9	6	62.57	62.57	–	–
84 X 54	9	6	64.84	64.84	–	–
84 X 50	9	6	67.66	67.66	–	–
84 X 46	9	5	71.13	71.13	37.90	37.90
84 X 40	9	5	77.96	77.96	39.50	39.50
84 X 37	9	4	82.35	82.35	41.60	41.60
84 X 26	9	3	100.00	108.12	77.80	77.80
84 X 19	9	3	100.00	141.00	90.00	101.46
78 X 63	8	7	60.56	60.56	–	–
78 X 58	8	6	62.42	62.42	–	–
78 X 54	8	6	64.42	64.42	–	–
78 X 50	8	6	66.95	66.95	40.50	40.50
78 X 46	8	5	70.12	70.12	41.10	41.10
78 X 40	8	5	76.47	76.47	42.60	42.60
78 X 37	8	4	80.59	80.59	45.20	45.20
78 X 26	8	3	100.00	104.98	78.91	78.91
78 X 19	8	3	100.00	136.31	90.00	102.47

DESIGN PRESSURES CHART - PSF

WINDOW SIZE L X S INCHES	NUMBER OF ANCHORS		3/16" TEMPERED GLASS		1/4" ANNEALED GLASS	
	LONG SIDE	SHORT SIDE	POS.	NEG.	POS.	NEG.
74 X 66	8	7	63.32	63.32	–	–
74 X 63	8	7	66.26	66.26	–	–
74 X 58	8	6	67.97	67.97	–	–
74 X 54	8	6	69.90	69.90	41.70	41.70
74 X 50	8	6	72.41	72.41	43.20	43.20
74 X 46	8	5	75.62	75.62	44.10	44.10
74 X 40	8	5	82.13	82.13	46.00	46.00
74 X 37	8	4	86.39	86.39	47.90	47.90
74 X 26	8	3	100.00	111.86	79.77	79.77
74 X 19	8	3	100.00	144.76	90.00	103.24
63 X 58	7	6	72.06	72.06	39.66	39.66
63 X 54	7	6	77.40	77.40	42.59	42.59
63 X 50	7	6	81.70	81.70	46.00	46.00
63 X 46	7	5	84.37	84.37	50.00	50.00
63 X 40	7	5	90.25	90.25	55.90	55.90
63 X 37	7	4	94.28	94.28	57.80	57.80
63 X 26	7	3	100.00	119.41	82.86	82.86
63 X 19	7	3	100.00	152.71	90.00	105.97
53 X 50	6	6	83.59	83.59	46.00	46.00
53 X 46	6	5	90.86	90.86	50.00	50.00
53 X 40	6	5	100.00	100.80	57.50	57.50
53 X 37	6	4	100.00	104.24	62.16	62.16
53 X 26	6	3	100.00	127.94	87.13	87.13
53 X 19	6	3	100.00	160.99	90.00	109.64
46 X 40	5	5	100.00	104.48	57.50	57.50
46 X 37	5	4	100.00	108.97	62.16	62.16
46 X 26	5	3	100.00	129.23	88.46	88.46
46 X 19	5	3	100.00	159.88	90.00	113.41
38 X 37	4	4	100.00	112.96	62.16	62.16
38 X 26	4	3	100.00	136.47	88.46	88.46
38 X 19	4	3	100.00	163.81	90.00	119.98
26 X 26	3	3	100.00	160.75	88.46	88.46
26 X 19	3	3	100.00	209.00	90.00	121.05

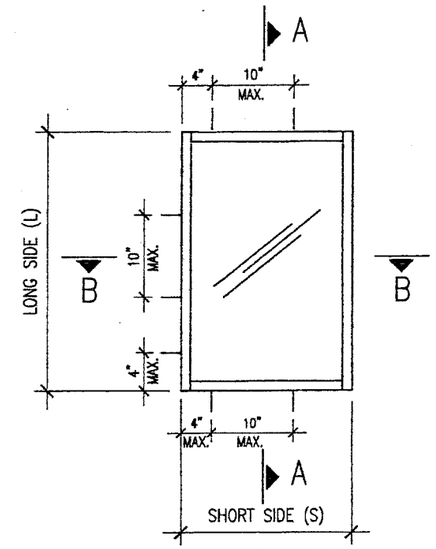

RECTANGLE TYPICAL ELEVATION

GENERAL NOTES:

1.– THIS PRODUCT MEETS THE REQUIREMENTS OF FBC 5TH EDITION (2014) AND FBC 6TH EDITION (2017).
2.– MIAMI–DADE APPROVED SHUTTERS ARE REQUIRED.
3.– FOR NUMBER OF ANCHORS FOR EACH UNIT SIZE REFER TO DESIGN PRESSURES CHART.
4.– FOR ANCHOR TYPE AND SPACING REFER TO TYPICAL ELEVATIONS AND SECTIONS ON SHEET 3.
5.– CONCRETE / MASONRY STRUCTURE FOR UNIT ATTACHMENT SHALL COMPLY WITH THE FOLLOWING REQUIREMENTS:
   – CONCRETE STRENGTH Fc'28 = 3000 PSI MIN.
   – CMU AS PER ASTM C90. CMU MUST BE 8–INCH THICK, NORMAL WEIGHT BLOCKS WITH A MINIMUM COMPRESSIVE STRENGTH OF 1.9 KSI.
   – FILLED CMU Fm' = 2000 PSI MIN.
6.– USE NON–SHRINK, NON–METALIC HYDRAULIC CEMENT GROUT PER ASTM C1107/C1107M STANDARD SPECIFICATION FOR PACKAGED DRY.
7.– WOOD HOST STRUCTURE SHALL BE "SOUTHERN YELLOW PINE" G= 0.55 OR GREATER DENSITY.
8.– COLD–FORMED STEEL HOST STRUCTURE SHALL NOT BE LESS THAN 18 GAUGE (MIN. THICKNESS OF 0.048"). STEEL SHALL BE Fy = 36 KSI MIN.
9.– THE THICKNESS OF THE ALUMINUM HOST STRUCTURE SHALL NOT BE LESS THAN 1/8". ALUMINUM SHALL BE 6063–T6.
10.– 1X OR 2X WOOD BUCKS NOT INCLUDED IN THE SCOPE OF THIS PRODUCT APPROVAL SHALL BE PROPERLY ATTACHED TO SUSTAIN AND TRANSFER THE LOADS IMPOSED BY THE GLAZING SYSTEM TO THE STRUCTURE AND SHALL BE APPROVED BY THE BUILDING OFFICIAL PRIOR TO DOOR INSTALLATION.
11.– ALUMINUM IN CONTACT WITH DISSIMILAR MATERIALS SHALL BE PROTECTED (BY OTHERS) AS SPECIFIED IN FBC.

GLASS:

3/16" TEMPERED OR 1/4" ANNEALED GLASS.

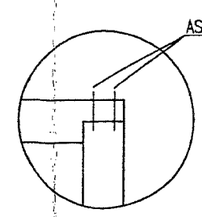

CORNER DETAIL # 1

WIND LOAD A.S.D. FACTOR NOTE:

THE DESIGN PRESSURES SHOWN ON THIS CHART ARE FOR ALLOWABLE STRESS DESIGN. WIND LOADS CALCULATED BASED UPON "ULTIMATE WIND SPEED" AS DETERMINED FROM ASCE 7–10 ARE PERMITTED TO BE MULTIPLIED BY 0.6 FOR COMPARISON BETWEEN THE ACTING WIND LOADS AND THE DESIGN PRESSURE OF THE UNITS.

PRODUCT REVISED
as complying with the Florida Building Code
NOA–No. 17–1226.19
Expiration Date 09/16/2023
By Manuel Perez
Miami–Dade Product Control

FRANCISCO HERNANDEZ LICENSE No. 51393 STATE OF FLORIDA PROFESSIONAL ENGINEER
12-12-17
FRANCISCO HERNANDEZ
FLORIDA PE # 51393

Sunshine Windows Manufacturing, Inc.
1745 W. 33rd Place
Hialeah, Florida 33012
Ph: (305)364–9952
Fax:(305)828–5118

SERIES 4230 ALUMINUM FIXED WINDOW NON-IMPACT RESISTANT GLASS

No	DATE	REVISION
3	02–19–15	REVISION FOR COMPLIANCE WITH FBC 5TH EDITION (2014)
4	12–10–17	REVISION FOR COMPLIANCE WITH FBC 5TH EDITION (2017)

DRAWING No. PW08–01
DATE: 11–20–08
SCALE: 1/2"=1"
SHEET 1 OF 4

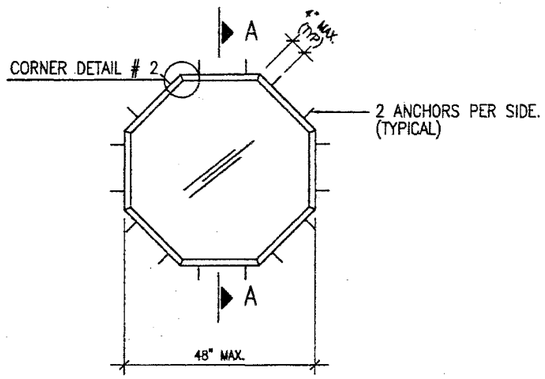

OCTAGON
TYPICAL ELEVATION

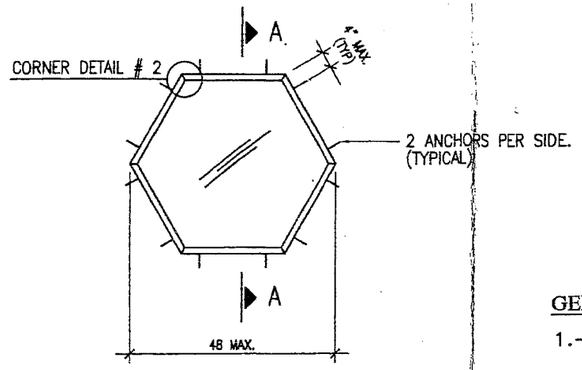

HEXAGON
TYPICAL ELEVATION

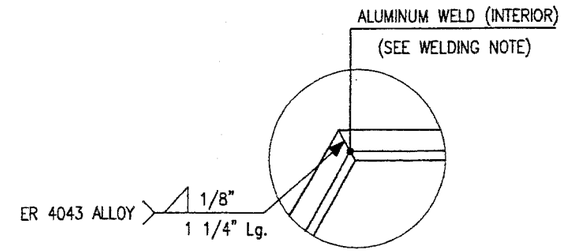

CORNER DETAIL # 2

DESIGN PRESSURE CHART - PSF				
WINDOW SIZE INCHES	3/16" TEMPERED GLASS		1/4" ANNEALED GLASS	
	POS.	NEG.	POS.	NEG.
48	100.00	127.65	66.70	66.70
42	100.00	111.15	80.40	80.40
36	100.00	151.29	90.00	94.60
30	100.00	210.00	90.00	146.00
24	100.00	210.00	90.00	210.00

DESIGN PRESSURE CHART - PSF				
WINDOW SIZE INCHES	3/16" TEMPERED GLASS		1/4" ANNEALED GLASS	
	POS.	NEG.	POS.	NEG.
48	66.68	66.68	66.70	66.70
42	87.10	87.10	80.40	80.40
36	100.00	118.55	90.00	94.60
30	100.00	170.71	90.00	132.79
24	100.00	209.00	90.00	165.99

WIND LOAD A.S.D. FACTOR NOTE:

THE DESIGN PRESSURES SHOWN ON THIS CHART ARE FOR ALLOWABLE STRESS DESIGN. WIND LOADS CALCULATED BASED UPON "ULTIMATE WIND SPEED" AS DETERMINED FROM ASCE 7-10 ARE PERMITTED TO BE MULTIPLIED BY 0.6 FOR COMPARISON BETWEEN THE ACTING WIND LOADS AND THE DESIGN PRESSURE OF THE UNITS.

GENERAL NOTES:

1.- THIS PRODUCT MEETS THE REQUIREMENTS OF FBC 5TH EDITION (2014) AND FBC 6TH EDITION (2017).
2.- MIAMI-DADE APPROVED SHUTTERS ARE REQUIRED.
3.- FOR NUMBER OF ANCHORS FOR EACH UNIT SIZE REFER TO DESIGN PRESSURES CHART.
4.- CONCRETE / MASONRY STRUCTURE FOR UNIT ATTACHMENT SHALL COMPLY WITH THE FOLLOWING REQUIREMENTS:
   - CONCRETE STRENGTH Fc'28 = 3000 PSI MIN.
   - CMU AS PER ASTM C90. CMU MUST BE 8-INCH THICK, NORMAL WEIGHT BLOCKS WITH A MINIMUM COMPRESSIVE STRENGTH OF 1.9 KSI.
   - FILLED CMU Fm' = 2000 PSI MIN.
5.- USE NON-SHRINK, NON-METALIC HYDRAULIC CEMENT GROUT PER ASTM C1107/C1107M STANDARD SPECIFICATION FOR PACKAGED DRY.
6.- WOOD HOST STRUCTURE SHALL BE "SOUTHERN YELLOW PINE" G= 0.55 OR GREATER DENSITY.
7.- COLD-FORMED STEEL HOST STRUCTURE SHALL NOT BE LESS THAN 18 GAUGE (MIN. THICKNESS OF 0.048"). STEEL SHALL BE Fy = 36 KSI MIN.
8.- THE THICKNESS OF THE ALUMINUM HOST STRUCTURE SHALL NOT BE LESS THAN 1/8". ALUMINUM SHALL BE 6063-T6.
9.- 1X OR 2X WOOD BUCKS NOT INCLUDED IN THE SCOPE OF THIS PRODUCT APPROVAL SHALL BE PROPERLY ATTACHED TO SUSTAIN AND TRANSFER THE LOADS IMPOSED BY THE GLAZING SYSTEM TO THE STRUCTURE AND SHALL BE APPROVED BY THE BUILDING OFFICIAL PRIOR TO DOOR INSTALLATION.
10.- ALUMINUM IN CONTACT WITH DISSIMILAR MATERIALS SHALL BE PROTECTED (BY OTHERS) AS SPECIFIED IN FBC.

GLASS:

3/16" TEMPERED OR 1/4" ANNEALED GLASS.

WELDING:

FOR CORNER WELDED CONNECTIONS USE 1/8" FILLET WELD WITH 1 1/4" MINIMUM LENGTH MADE WITH ER4043 FILLER ALLOY.

PRODUCT REVISED
as complying with the Florida Building Code
NOA-No. 17-1226.19
Expiration Date 09/16/2023
By Manuel Perez
Miami-Dade Product Control

FRANCISCO HERNANDEZ LICENSE No. 51393 STATE OF FLORIDA PROFESSIONAL ENGINEER
12-10-17
FRANCISCO HERNANDEZ
FLORIDA PE # 51393

Sunshine Windows Manufacturing, Inc.
1745 W. 33rd Place
Hialeah, Florida 33012
Ph: (305)364-9952
Fax:(305)828-5118

SERIES 4230 ALUMINUM FIXED WINDOW NON-IMPACT RESISTANT GLASS

No	DATE	REVISION
3	02-19-15	REVISION FOR COMPLIANCE WITH FBC 5TH EDITION (2014)
4	12-10-17	REVISION FOR COMPLIANCE WITH FBC 5TH EDITION (2017)

DRAWING No. PW08-01
DATE: 11-20-08
SCALE: 1/2"=1"

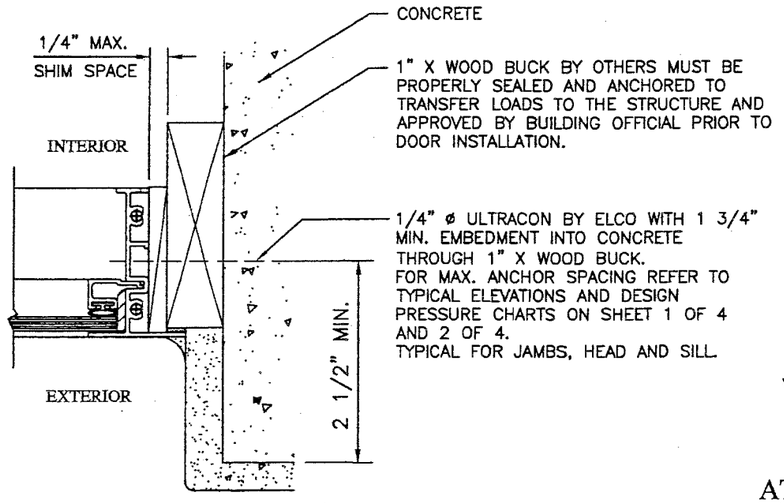

ATTACHMENT TO CONCRETE USING 1" BY WOOD BUCK

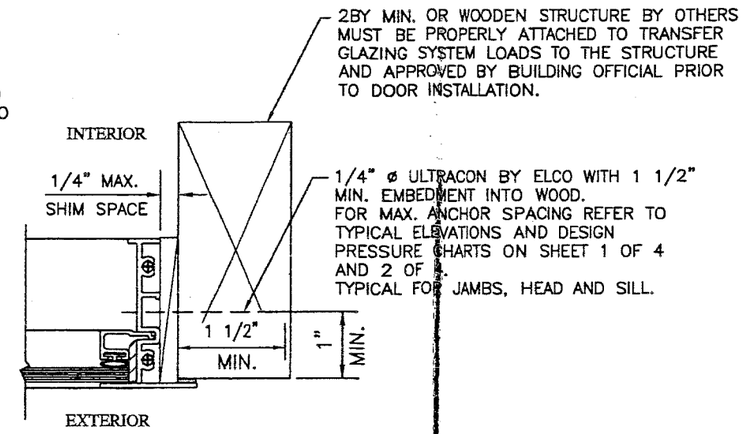

ATTACHMENT TO WOOD

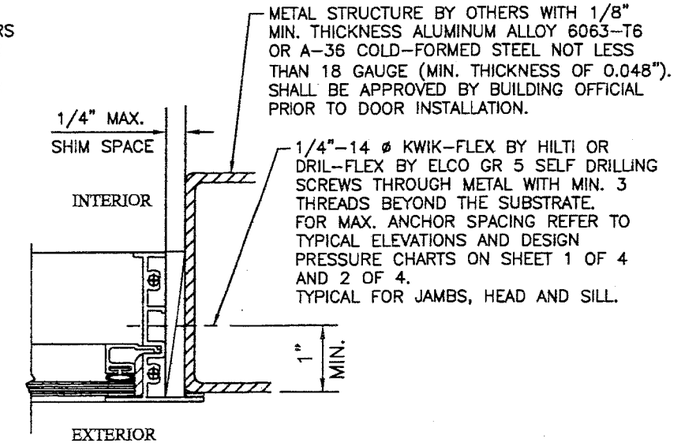

ATTACHMENT TO METAL

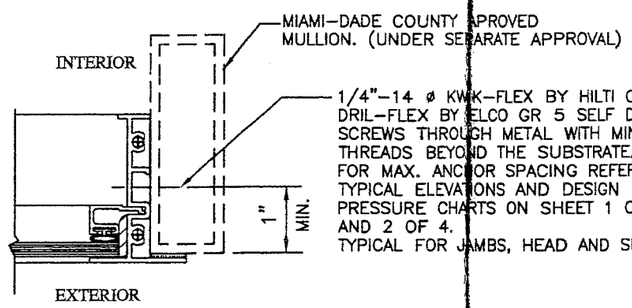

ATTACHMENT TO MULLION

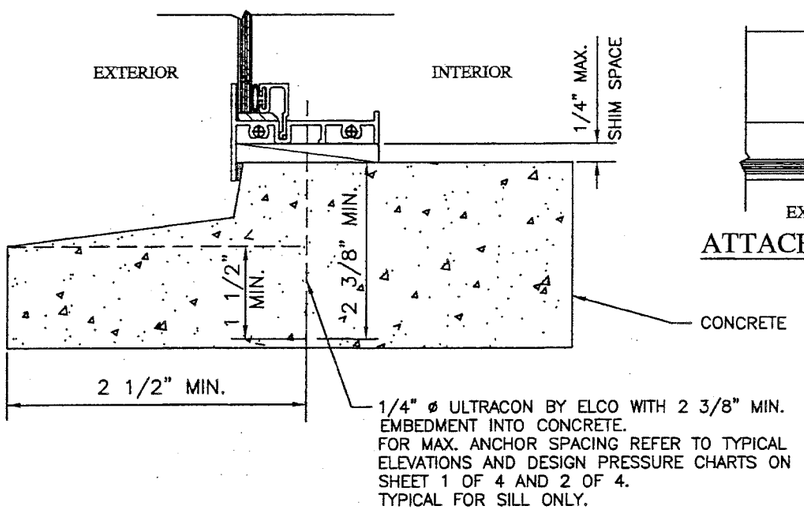

ATTACHMENT TO PRE-CAST SILL

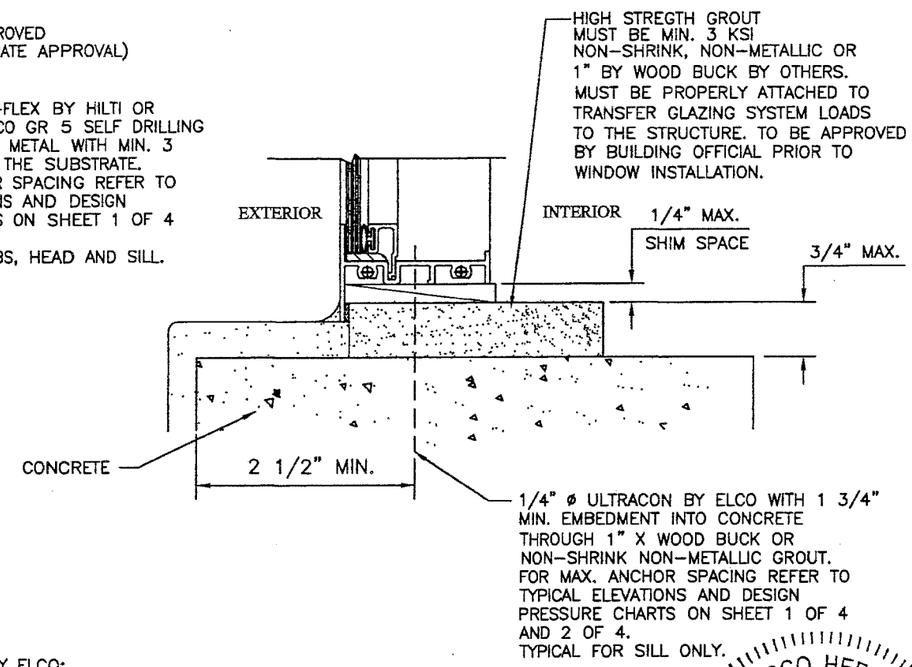

ATTACHMENT TO CONCRETE

ANCHOR NOTES:

1.- MECHANICAL PROPERTIES OF ULTRACON ANCHOR BY ELCO:
   A.- YIELD STRENGTH (FY)= 155 KSI
   B.- ULTIMATE TENSILE STRENGTH (FU)= 177 KSI

2.- MECHANICAL PROPERTIES OF KWIK-FLEX SELF-DRILLING SCREW (GRADE 5) BY HILTI:
   A.- YIELD STRENGTH (FY)= 92 KSI
   B.- ULTIMATE TENSILE STRENGTH (FU)= 120 KSI

3.- MECHANICAL PROPERTIES OF DRIL-FLEX SELF-DRILLING FASTENER (GRADE 5) BY ELCO:
   A.- YIELD STRENGTH (FY)= 92 KSI
   B.- ULTIMATE TENSILE STRENGTH (FU)= 120 KSI

TYPICAL SECTIONS

PRODUCT REVISED
as complying with the Florida Building Code
NOA-No. 17-1226.19
Expiration Date 09/16/2023
By Manuel Perez
Miami-Dade Product Control

FRANCISCO HERNANDEZ LICENSE No. 51393 STATE OF FLORIDA PROFESSIONAL ENGINEER
12-10-17
FRANCISCO HERNANDEZ
FLORIDA PE # 51393

Sunshine Windows Manufacturing, Inc.
1745 W. 33rd Place
Hialeah, Florida 33012
Ph: (305)364-9952
Fax:(305)828-5118

SERIES 4230 ALUMINUM FIXED WINDOW NON-IMPACT RESISTANT GLASS

No	DATE	REVISION
3	02-19-15	REVISION FOR COMPLIANCE WITH FBC 5TH EDITION (2014)
4	12-10-17	REVISION FOR COMPLIANCE WITH FBC 6TH EDITION (2017)

DRAWING No. PW08-01
DATE: 11-20-08
SCALE: 1/2"=1"

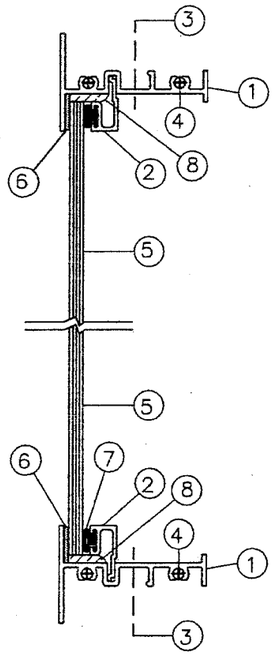

SECTION A - A

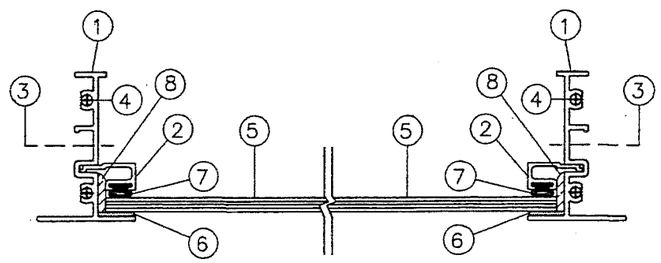

SECTION B - B

GLAZING DETAIL

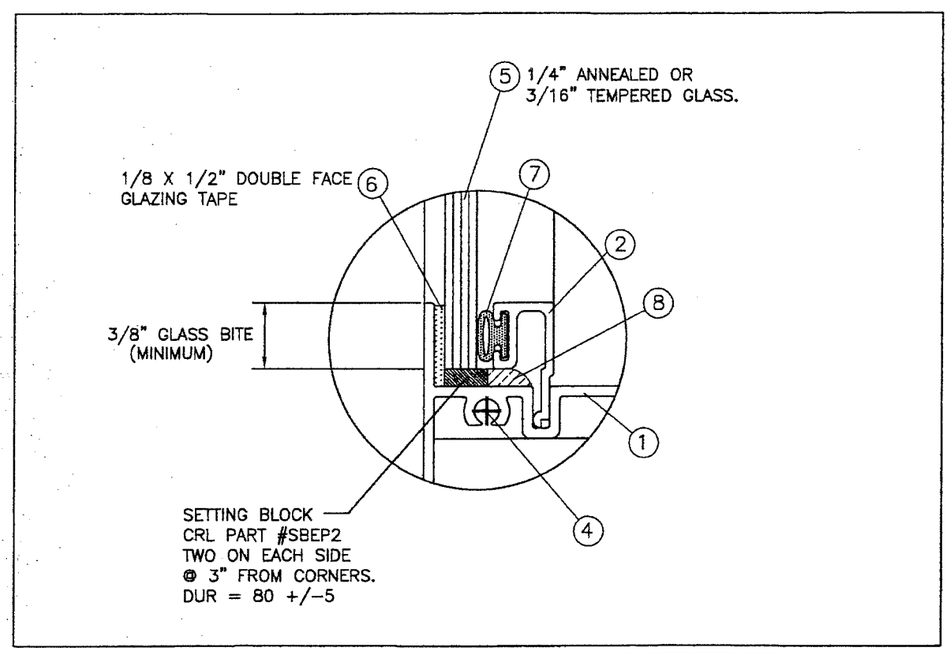

MATERIAL LIST

ITEM #	PART	DESCRIPTION	MATERIAL
1	SW-101	HEAD, SILL AND JAMBS	6063-T6
2	SSW-102	GLAZING BEAD	6063-T6
3	ANCHORS	SEE ELEVATIONS SHEETS 1 OF 4 AND 2 OF 4	
4	# 8" X 1" PH S.M.S	ASSEMBLY SCREW	
5	1/4" ANNEALED OR 3/16" TEMPERED GLASS	SEE GLAZING DETAIL ON SHEET 4 OF 4	
6	–	1/8" X 1/2" DOUBLE FACE GLAZING TAPE	FOAM
7	SW-3082	WEATHER STRIP BULB DUROMETER: 78A	VINYL
8	SEALANT	FLEXSIL 4300	SILICONE

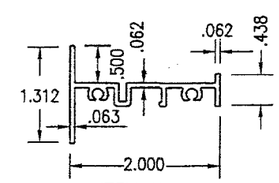

ITEM No. 1
PART SW-101
FRAME

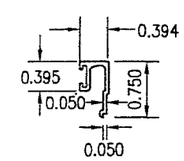

ITEM No. 2
PART SSW-102
GLAZING BEAD

PRODUCT REVISED
as complying with the Florida Building Code
NOA-No. 17-1226.19
Expiration Date 09/16/2023
By Manuel Perez
Miami-Dade Product Control

FRANCISCO HERNANDEZ
LICENSE
No. 51393
STATE OF FLORIDA
PROFESSIONAL ENGINEER

12-10-17
FRANCISCO HERNANDEZ
FLORIDA PE # 51393

Sunshine Windows Manufacturing, Inc.
1745 W. 33rd Place
Hialeah, Florida 33012
Ph: (305)364-9952
Fax:(305)828-5118

SERIES 4230 ALUMINUM
FIXED WINDOW
NON-IMPACT RESISTANT GLASS

No	DATE	REVISION
3	02-19-15	REVISION FOR COMPLIANCE WITH FBC 5TH EDITION (2014)
4	12-10-17	REVISION FOR COMPLIANCE WITH FBC 6TH EDITION (2017)

DRAWING No.
PW08-01
DATE: 11-20-08
SCALE: 1/2"=1"

SHEET 4 OF 4