MIAMI-DADE COUNTY
DEPARTMENT OF REGULATORY AND ECONOMIC RESOURCES (RER)
BOARD AND CODE ADMINISTRATION DIVISION

MIAMI-DADE COUNTY
PRODUCT CONTROL SECTION
11805 SW 26 Street, Room 208
T (786) 315-2590 F (786) 315-2599
www.miamidade.gov/economy

NOTICE OF ACCEPTANCE (NOA)

Daybar Industries Limited
50 West Drive
Brampton, Ontario, Canada L6T 2J4

SCOPE:

This NOA is being issued under the applicable rules and regulations governing the use of construction materials. The documentation submitted has been reviewed and accepted by Miami-Dade County RER - Product Control Section to be used in Miami-Dade County and other areas where allowed by the Authority Having Jurisdiction (AHJ).

This NOA shall not be valid after the expiration date stated below. The Miami-Dade County Product Control Section (In Miami-Dade County) and/or the AHJ (in areas other than Miami-Dade County) reserve the right to have this product or material tested for quality assurance purposes. If this product or material fails to perform in the accepted manner, the manufacturer will incur the expense of such testing and the AHJ may immediately revoke, modify, or suspend the use of such product or material within their jurisdiction. RER reserves the right to revoke this acceptance, if it is determined by Miami-Dade County Product Control Section that this product or material fails to meet the requirements of the applicable building code.

This product is approved as described herein, and has been designed to comply with the Florida Building Code, including the High Velocity Hurricane Zone.

DESCRIPTION: Outswing Series LS 18 GA Skin Flush Commercial Double & Single Doors w/ Series AS Frame

APPROVAL DOCUMENT: Drawing No. **17-010**, titled "Outswing Series LS 18GA Skin Flush Commercial Double & Single Steel Door w/ Series AS 16GA Frame", sheets 1 through 14 of 14, including 2A, 2B, 8A and 9A dated 11/11/17, with Revision 1 dated 03/21/18, prepared by Tilteco, Inc, signed and sealed by Walter A. Tillit, Jr., P.E., bearing the Miami-Dade County Product Control Acceptance stamp with the Notice of Acceptance number and approval date by the Miami-Dade County Product Control Section.

MISSILE IMPACT RATING: Large and Small Missile Impact Resistant

LABELING: Each unit shall bear a permanent label with the manufacturer's name or logo, Brampton, Ontario, Canada, model/series, and following statement: "Miami-Dade County Product Control Approved", unless otherwise noted herein.

RENEWAL of this NOA shall be considered after a renewal application has been filed and there has been no change in the applicable building code negatively affecting the performance of this product.

TERMINATION of this NOA will occur after the expiration date or if there has been a revision or change in the materials, use, and/or manufacture of the product or process. Misuse of this NOA as an endorsement of any product, for sales, advertising or any other purposes shall automatically terminate this NOA. Failure to comply with any section of this NOA shall be cause for termination and removal of NOA.

ADVERTISEMENT: The NOA number preceded by the words Miami-Dade County, Florida, and followed by the expiration date may be displayed in advertising literature. If any portion of the NOA is displayed, then it shall be done in its entirety.

INSPECTION: A copy of this entire NOA shall be provided to the user by the manufacturer or its distributors and shall be available for inspection at the job site at the request of the Building Official.

This NOA consists of this page 1 and evidence pages E-1 and E-2, as well as approval document mentioned above.

The submitted documentation was reviewed by **Jorge M. Plasencia, P.E.**

MIAMI-DADE COUNTY APPROVED

5/24/18

NOTICE OF ACCEPTANCE: EVIDENCE SUBMITTED

1. NEW EVIDENCE SUBMITTED

A. DRAWINGS

1. Manufacturer's die drawings and sections.

2. Drawing No. **17-010**, titled "Outswing Series LS 18GA Skin Flush Commercial Double & Single Steel Door w/ Series AS 16GA Frame", sheets 1 through 14 of 14, including 2A, 2B, 8A and 9A dated 11/11/17, with Revision 1 dated 03/21/18, prepared by Tilteco, Inc, signed and sealed by Walter A. Tillit, Jr., P.E.

B. TESTS

1. Test reports on: 1) Air Infiltration Test, per FBC, TAS 202-94
2) Uniform Static Air Pressure Test, Loading per FBC TAS 202-94
3) Water Resistance Test, per FBC, TAS 202-94
4) Large Missile Impact Test per FBC, TAS 201-94
5) Cyclic Wind Pressure Loading per FBC, TAS 203-94
6) Forced Entry Test, per FBC 2411 3.2.1, TAS 202-94

along with marked–up drawings and installation diagram of an outwing steel door, prepared by Fenestration Testing Laboratory Inc., Test Report No. **9690**, dated 10/23/17, and revised 03/05/18 signed and sealed by Idalmis Ortega, P.E.

C. CALCULATIONS

1. Anchor verification calculations and structural analysis, complying with **FBC 6th Edition (2017)**, prepared by Tilteco, Inc., dated 11/15/17, signed and sealed by Walter A Tillit, Jr., P. E.

D. QUALITY ASSURANCE

1. Miami-Dade Department of Regulatory and Economic Resources (RER)

E. MATERIAL CERTIFICATIONS

1. Tensile test report prepared by prepared by Fenestration Testing Laboratory Inc, Test Report No. **9690,** tested per ASTM E8, dated 10/23/17 and revised 03/05/18, signed and sealed by Idalmis Ortega, P.E.

F. STATEMENTS

1. Distributor Agreement, dated 05/01/18, between manufacturer: Daybar Industries Limited and distributor: Daybar Southeast Manufacturing, Inc., signed by Mark Dodson and David Ball on behalf of their respective companies.

2. Statement letter of conformance to **FBC 6th Edition (2017)**, dated 11/13/17, prepared by Tilteco, Inc., signed and sealed by Walter A. Tillit, Jr., P.E

Jorge M. Plasencia, P.E
Product Control Unit Supervisor
NOA No. 17-127.15
Expiration Date: May 31, 2023
Approval Date: May 31, 2018

NOTICE OF ACCEPTANCE: EVIDENCE SUBMITTED

F. STATEMENTS (continued)

3. Statement letter of no financial interest, dated 11/13/17, prepared by Tilteco, Inc., signed and sealed by Walter A. Tillit, Jr., P.E.

4. Test Proposal **#17-0443**, dated 05/22/17, issued by RER.

G. OTHER

1. None.

Jorge M. Plasencia, P.E
Product Control Unit Supervisor
NOA No. 17-127.15
Expiration Date: May 31, 2023
Approval Date: May 31, 2018

GENERAL NOTES AND SPECIFICATIONS:

1. OUTSWING SERIES LS 18GA SKIN FLUSH COMMERCIAL DOUBLE & SINGLE STEEL DOOR W/ SERIES "AS" 16GA FRAME SHOWN ON THIS PRODUCT APPROVAL DOCUMENT (P.A.D.) HAS BEEN VERIFIED FOR CODE COMPLIANCE IN ACCORDANCE WITH THE 2017 (6th EDITION) OF THE FLORIDA BUILDING CODE. DOOR MAY BE INSTALLED AT HIGH VELOCITY HURRICANE ZONES.

DESIGN WIND LOADS SHALL BE DETERMINED AS PER SECTION 1620 OF THE ABOVE MENTIONED CODE, USING ASCE 7-10 AND SHALL NOT EXCEED THE MAXIMUM (A.S.D.) DESIGN PRESSURE RATINGS INDICATED ON SHEET 2.

IN ORDER TO VERIFY THE ABOVE CONDITION, ULTIMATE DESIGN WIND LOADS DETERMINED PER ASCE 7-10 SHALL BE FIRST REDUCED TO A.S.D. DESIGN WIND LOADS BY MULTIPLYING THEM BY 0.6 IN ORDER TO COMPARE THESE W/ MAX. (A.S.D.) DESIGN PRESSURE RATINGS INDICATED ON SHEET 2.

THIS DOOR'S ADEQUACY FOR WIND AND IMPACT LOAD HAS BEEN VERIFIED IN ACCORDANCE WITH SECTION 1626 OF THE ABOVE MENTIONED CODE AS PER PROTOCOLS TAS-201, TAS-202, TAS-203 AS PER FENESTRATION TESTING LABORATORY, INC. REPORT # 9690, AND AS PER SUBMITTED STRUCTURAL CALCULATIONS, PERFORMED AS PER SECTION 1616 OF THE FLORIDA BUILDING CODE.

2. ALL COMPONENTS SHALL BE AS SPECIFIED ON APPLICABLE DETAIL SHEETS AND AT BILL OF MATERIALS (SHEET 6) OF THIS DRAWING.

3. COMPLIANCE OF EGRESS / ESCAPE REQUIREMENTS OF THESE DOORS PER FLORIDA BUILDING CODE TO BE DETERMINED BY BUILDING OFFICIALS ON A CASE-BY-CASE BASIS.

4. ALL SCREWS USED FOR ASSEMBLY CONNECTIONS (METAL TO METAL) TO BE STAINLESS STEEL 304 OR 316 AISI SERIES OR CORROSION RESISTANT COATED CARBON STEEL AS PER DIN 50018 WITH 50 ksi YIELD POINT AND 90 ksi TENSILE STRENGTH & SHALL COMPLY W/ FLORIDA BUILDING CODE SECTION 2411.3.3.4.

5. ALL WELDING TO CONFORM W/AMERICAN WELDING SOCIETY A.W.S. D.1.3 AND D-19.0 REGULATIONS WITH E60XX ELECTRODES, FOR GALVANNEAL MATERIAL, AND W/AMERICAN WELDING SOCIETY A.W.S. D.1.6 REGULATIONS W/ E-308 ELECTRODES (FU=80k.s.i.) FOR STAINLESS STEEL MATERIAL.

6. ALL ANCHORS FOR DOOR FRAME CONNECTIONS TO EXISTING STRUCTURE SHALL BE AS SPECIFIED ON SHEETS 2 & 2A OF THIS DRAWING.
MAXIMUM ANCHORS SPACING SHALL BE AS PER ELEVATIONS ON SHEETS 2 & 2A OF THIS DRAWING.

7. PROVIDE MAX. LOAD BEARING SHIM SPACE AS INDICATED ON SHEETS 8, 8A, 9 & 9A.

8. THIS DOOR WILL NOT REQUIRE A HURRICANE PROTECTION DEVICE.

9. THESE DOOR ASSEMBLIES ARE APPROVED FOR WATER AND AIR INFILTRATION AS PER TESTING INDICATED ON GENERAL NOTE 1, AND SHALL BE LIMITED TO DESIGN PRESSURE RATINGS INDICATED ON SHEET 2.

10. PROVIDE SPECIFIED SEALANT AT ALL DOOR FRAME & THRESHOLD COMPONENTS INDICATED ON THIS DRAWING.

11. ALL EXISTING WALLS (STRUCTURE) WHERE DOOR IS TO BE INSTALLED MUST BE BUILT IN ACCORDANCE WITH THE FLORIDA BUILDING CODE AND SHALL BE DESIGNED TO SUSTAIN THE SUPERIMPOSED LOADS TRANSFERRED BY THE DOOR SYSTEM.

12. PERMIT HOLDER SHALL VERIFY THE ADEQUACY OF THE EXISTING STRUCTURE TO SUSTAIN THE SUPERIMPOSED LOADS TRANSFERRED BY THESE DOORS.

13. (a) THIS PRODUCT APPROVAL DOCUMENT (P.A.D.) PREPARED BY THIS ENGINEER IS GENERIC AND DOES NOT PROVIDE INFORMATION FOR A SITE SPECIFIC PROJECT; i.e. WHERE THE SITE CONDITIONS DEVIATE FROM THE P.A.D.

(b) CONTRACTOR TO BE RESPONSIBLE FOR THE SELECTION, PURCHASE AND INSTALLATION INCLUDING LIFE SAFETY OF THIS PRODUCT, BASED ON THIS P.A.D., PROVIDED HE/SHE DOES NOT DEVIATE FROM THE CONDITIONS DETAILED ON THIS DOCUMENT. CONSTRUCTION SAFETY AT SITE IS THE CONTRACTOR'S RESPONSIBILITY.

(c) THIS PRODUCT APPROVAL DOCUMENT (P.A.D.) WILL BE CONSIDERED INVALID IF ALTERED BY ANY MEANS.

(d) ORIGINAL P.A.D SHALL BEAR THE DATE, SEAL AND SIGNATURE OF THE PROFESSIONAL ENGINEER OF RECORD THAT PREPARED IT.

14. PRODUCT MANUFACTURER'S LABEL SHALL BE LOCATED ON A READILY VISIBLE LOCATION AT PRODUCT IN ACCORDANCE WITH SECTION 1709.5 OF THE FLORIDA BUILDING CODE.
ONE LABEL SHALL BE PLACED FOR EVERY OPENING.

SHEETS CONTENT:

THIS DRAWING SHALL ONLY BE USED TO OBTAIN PERMITS IN THE STATE OF FLORIDA

PRODUCT APPROVED
as complying with the Florida Building Code
NOA-No. 17-1227.15
Approval Date 05/31/2018
By
Miami-Dade Product Control

WALTER A. TILLIT JR. LICENSE No. 44167 STATE OF FLORIDA PROFESSIONAL ENGINEER

3/29/18

P.E. SEAL/SIGNATURE/DATE

FLORIDA BUILDING CODE (HIGH VELOCITY HURRICANE ZONE)

TILTECO INC.
TILLIT TESTING & ENGINEERING COMPANY
6355 N.W. 36th. St., Ste. 305, VIRGINIA GARDENS, Fl. 33166
Phone : (305)871-1530 . Fax : (305)871-1531
EB-0006719
WALTER A. TILLIT Jr. P.E.
FLORIDA Lic. # 44167

OUTSWING SERIES LS 18GA SKIN FLUSH COMMERCIAL DOUBLE & SINGLE STEEL DOOR W/ SERIES "AS" 16GA FRAME

DAYBAR INDUSTRIES LTD.
50 WEST DRIVE, BRAMPTON,
ON CANADA, L6T 2J4
TEL: 905 625-8000 FAX: 905 625-4204

REV. NO	DESCRIPTION	DATE	REV. No	DESCRIPTION	DATE
1	M.D.C COMMENTS	3/21/18	3	-	-
2	-	-	4	-	-

M.L.
DRAWN BY:

11/11/17
DATE:

17-010
DRAWING No.

SHEET 1 OF 14

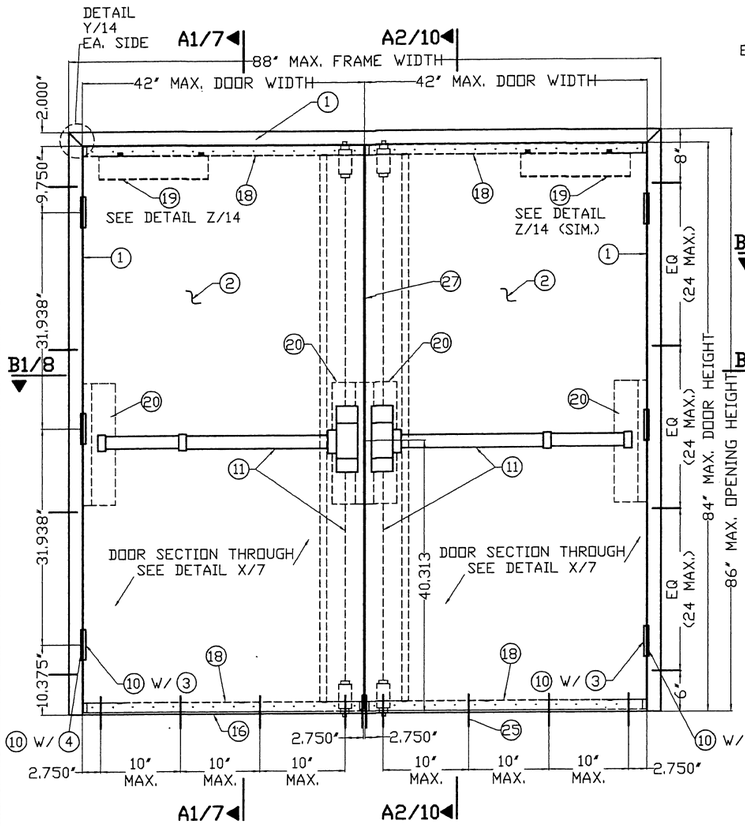

EXTERIOR ELEVATION (OUTSWING) DOUBLE DOOR
VON DUPRIN #9847F CONCEALED VERTICAL ROD EXIT DEVICE
HONEYCOMB CORE
HOLLOW CONCRETE BLOCK @ LEFT & RIGHT W/ 6 AT JAMBS

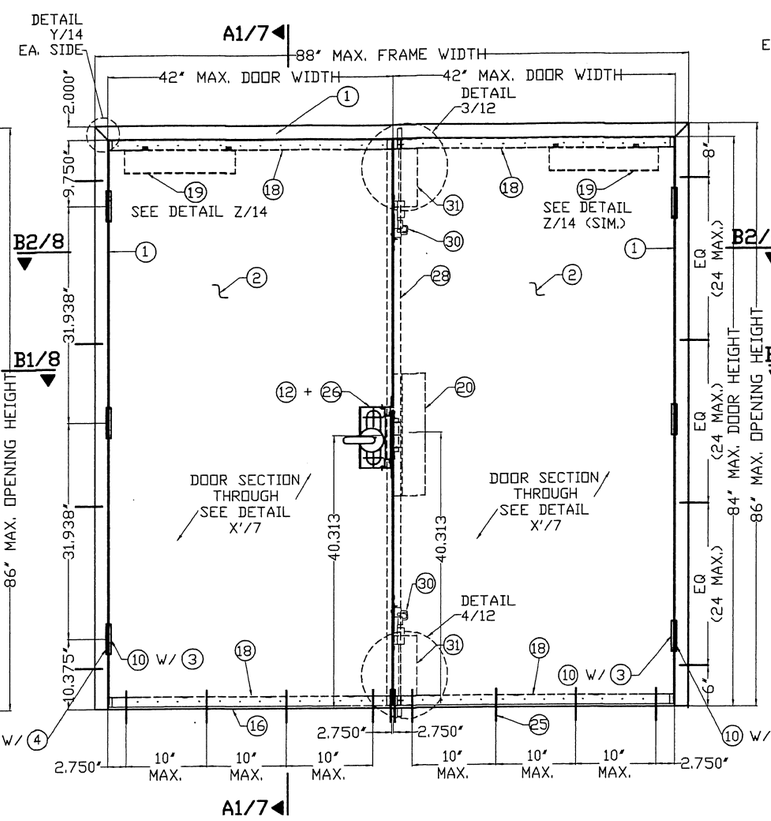

EXTERIOR ELEVATION (OUTSWING) DOUBLE DOOR
MORTISED DEVICE W/O DEAD BOLT @ ACTIVE & FLUSHBOLT @ INACTIVE
HONEYCOMB CORE
GROUT CONCRETE BLOCK @ LEFT & RIGHT W/ 8 + 8A AT JAMBS

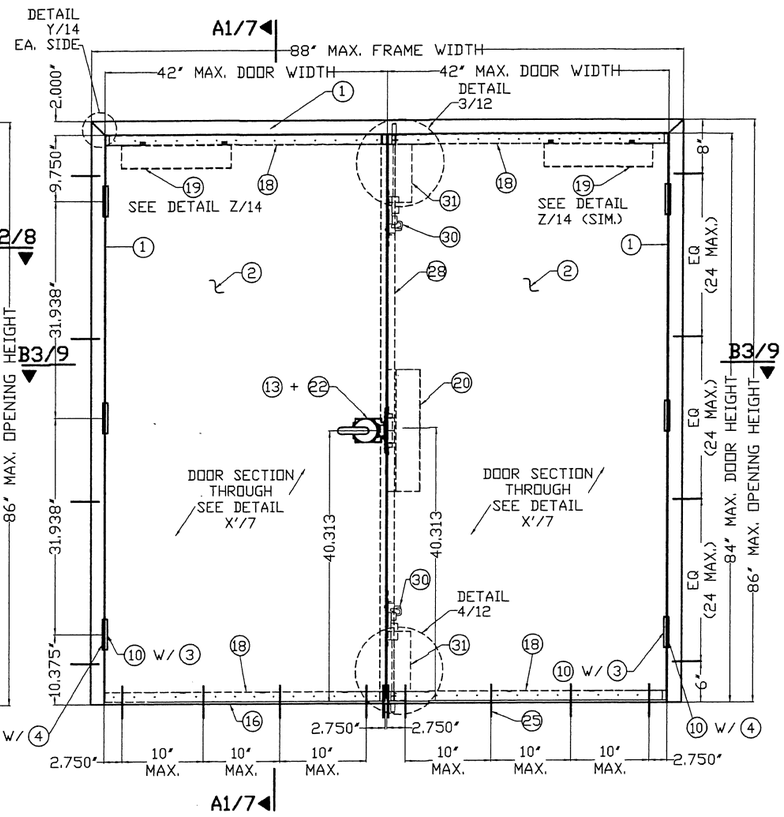

EXTERIOR ELEVATION (OUTSWING) DOUBLE DOOR
CYLINDRICAL LOCK @ ACTIVE & FLUSHBOLT @ INACTIVE
HONEYCOMB CORE
HOLLOW CONCRETE BLOCK @ LEFT W/ 6 + GROUT CONCRETE BLOCK @ RIGHT W/ 8 + 8A AT JAMBS

A.S.D. DESIGN LOAD
+70.0 psf, -70.0 psf

PRODUCT APPROVED
as complying with the Florida Building Code
NOA-No. 17-1227.15
Approval Date 05/31/2018
By
Miami-Dade Product Control

WALTER A. TILLIT JR. LICENSE No. 44167 STATE OF FLORIDA PROFESSIONAL ENGINEER

8/29/18

P.E. SEAL/SIGNATURE/DATE

FLORIDA BUILDING CODE (HIGH VELOCITY HURRICANE ZONE)

TILTECO INC.
TILLIT TESTING & ENGINEERING COMPANY
6355 N.W. 36th. St., Ste. 305, VIRGINIA GARDENS, FL 33166
Phone : (305)871-1530 . Fax : (305)871-1531
EB-0006719
WALTER A. TILLIT Jr. P.E.
FLORIDA Lic. # 44167

OUTSWING SERIES LS 18GA SKIN FLUSH COMMERCIAL DOUBLE & SINGLE STEEL DOOR W/ SERIES "AS" 16GA FRAME

DAYBAR INDUSTRIES LTD.
50 WEST DRIVE, BRAMPTON,
ON CANADA, L6T 2J4
TEL: 905 625-8000 FAX: 905 625-4204

REV. NO	DESCRIPTION	DATE	REV. No	DESCRIPTION	DATE
1	M.D.C COMMENTS	3/21/18	3	-	-
2	-	-	4	-	-

M.L.
DRAWN BY:
11/11/17
DATE:
17-010
DRAWING No.
SHEET 2 OF 14

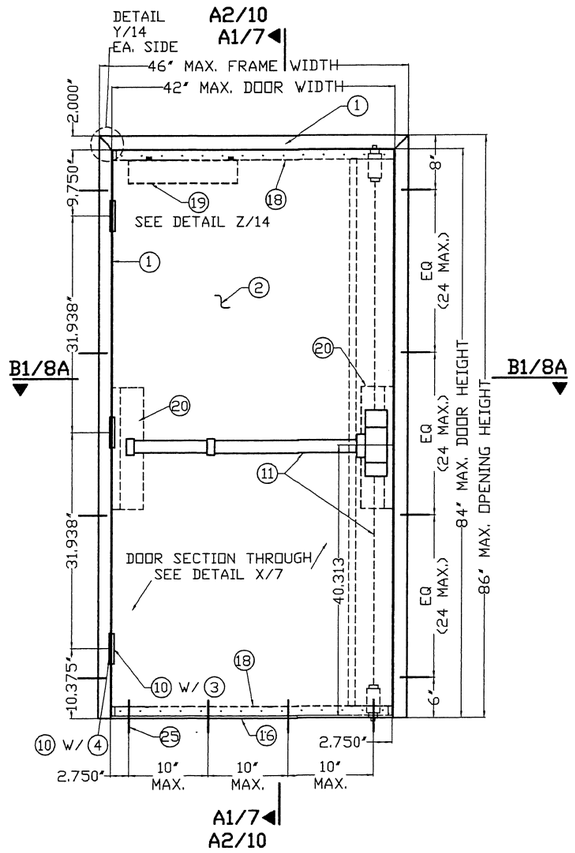

EXTERIOR ELEVATION (OUTSWING) SINGLE DOOR
VON DUPRIN #9847F CONCEALED VERTICAL ROD EXIT DEVICE
HONEYCOMB CORE
HOLLOW CONCRETE BLOCK @ LEFT & RIGHT W/ 6 AT JAMBS

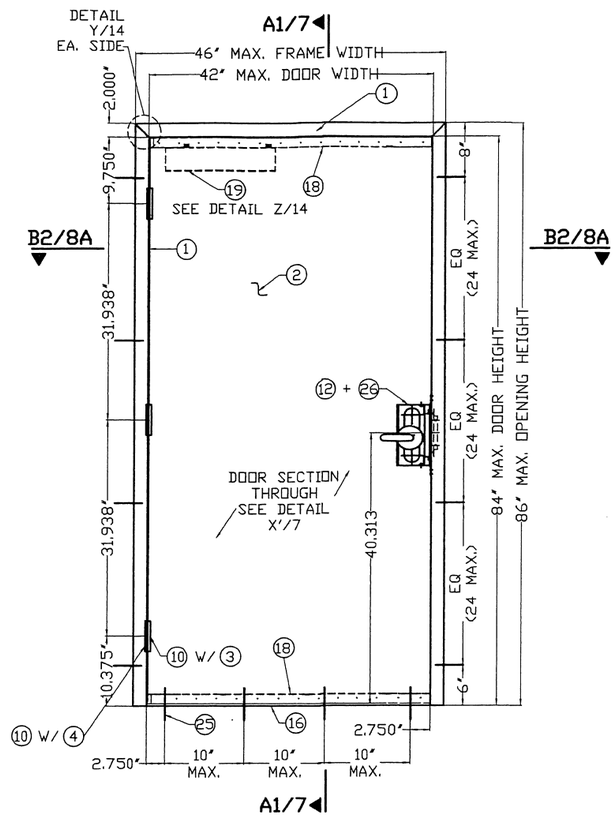

EXTERIOR ELEVATION (OUTSWING) SINGLE DOOR
MORTISED DEVICE W/O DEAD BOLT
HONEYCOMB CORE
GROUT CONCRETE BLOCK @ LEFT & RIGHT W/ 8 + 8A AT JAMBS

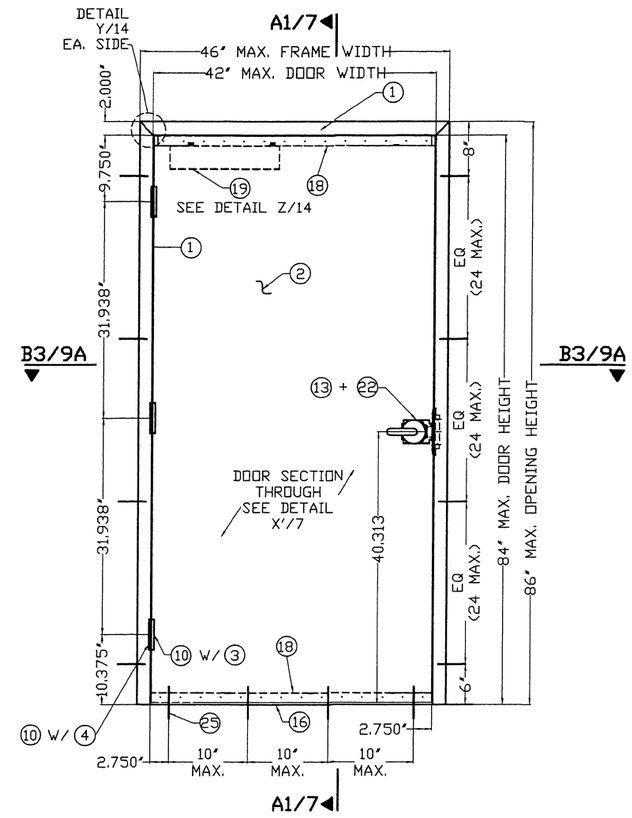

EXTERIOR ELEVATION (OUTSWING) SINGLE DOOR
CYLINDRICAL LOCK
HONEYCOMB CORE
HOLLOW CONCRETE BLOCK @ LEFT W/ 6 + GROUT CONCRETE BLOCK @ RIGHT W/ 8 + 8A AT JAMBS

A.S.D. DESIGN LOAD
+70.0 psf, -70.0 psf

WALTER A. TILLIT JR. LICENSE No. 44167 STATE OF FLORIDA PROFESSIONAL ENGINEER

8/29/18

P.E. SEAL/SIGNATURE/DATE

PRODUCT APPROVED
as complying with the Florida Building Code
NOA-No. 17-1227.15
Approval Date 05/31/2018
By
Miami-Dade Product Control

FLORIDA BUILDING CODE (HIGH VELOCITY HURRICANE ZONE)

TILTECO INC.
TILLIT TESTING & ENGINEERING COMPANY
6355 N.W. 36th. St., Ste. 305, VIRGINIA GARDENS, Fl. 33166
Phone : (305)871-1530 . Fax : (305)871-1531
EB-0006719
WALTER A. TILLIT Jr. P.E.
FLORIDA Lic. # 44167

OUTSWING SERIES LS 18GA SKIN FLUSH COMMERCIAL DOUBLE & SINGLE STEEL DOOR W/ SERIES "AS" 16GA FRAME

DAYBAR INDUSTRIES LTD.
50 WEST DRIVE, BRAMPTON,
ON CANADA, L6T 2J4
TEL: 905 625-8000 FAX: 905 625-4204

REV. NO	DESCRIPTION	DATE	REV. No	DESCRIPTION	DATE
1	M.D.C COMMENTS	3/21/18	3	-	-
2	-	-	4	-	-

M.L.
DRAWN BY:

11/11/17
DATE:

17-010
DRAWING No.

SHEET 2A OF 14

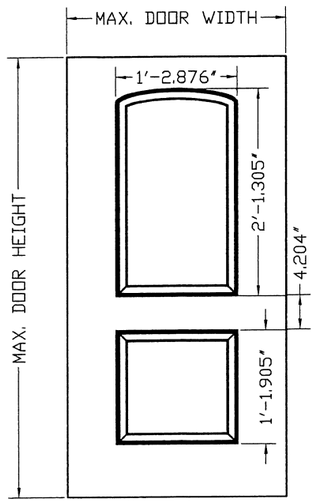

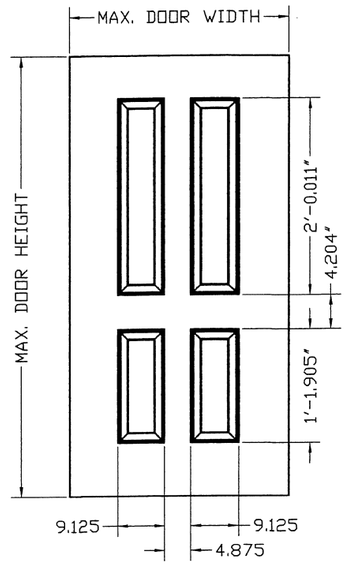

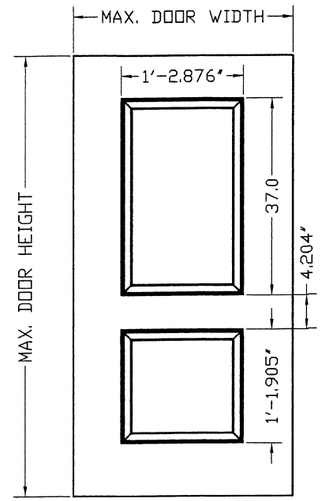

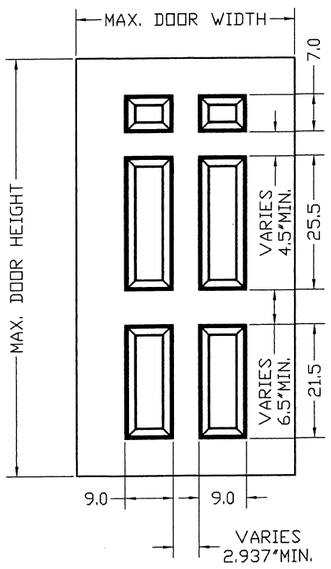

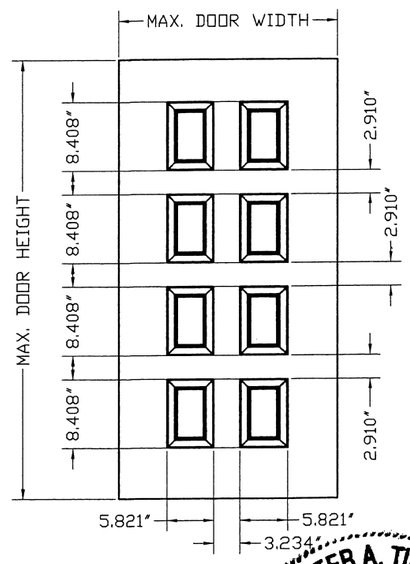

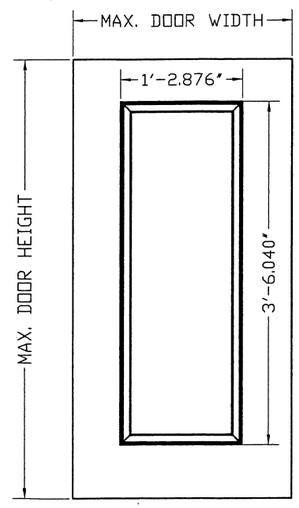

OPTIONAL EMBOSSED DOOR ELEVATIONS

PRODUCT APPROVED
as complying with the Florida Building Code
NOA-No. 17-1227.15
Approval Date 05/31/2018
By
Miami-Dade Product Control

WALTER A. TILLIT JR.
LICENSE
No. 44167
STATE OF FLORIDA
PROFESSIONAL ENGINEER

8/29/18

P.E. SEAL/SIGNATURE/DATE

FLORIDA BUILDING CODE (HIGH VELOCITY HURRICANE ZONE)

TILTECO INC.
TILLIT TESTING & ENGINEERING COMPANY
6355 N.W. 36th. St., Ste. 305, VIRGINIA GARDENS, Fl. 33166
Phone : (305)871-1530 , Fax : (305)871-1531
EB-0006719
WALTER A. TILLIT Jr. P.E.
FLORIDA Lic. # 44167

OUTSWING SERIES LS 18GA SKIN FLUSH COMMERCIAL DOUBLE & SINGLE STEEL DOOR W/ SERIES "AS" 16GA FRAME

DAYBAR INDUSTRIES LTD.
50 WEST DRIVE, BRAMPTON,
ON CANADA, L6T 2J4
TEL: 905 625-8000 FAX: 905 625-4204

REV. NO	DESCRIPTION	DATE	REV. No	DESCRIPTION	DATE
1			3	-	-
2	-	-	4	-	-

M.L.
DRAWN BY:
11/11/17
DATE:
17-010
DRAWING No.
SHEET 2B OF 14

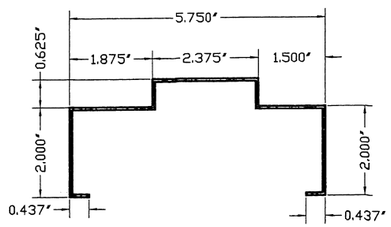

① AS 5 3/4" TYPICAL SECTION THROUGH

MATERIAL:
GAUGE 16 (0.051") MINIMUM
GALVANNEAL

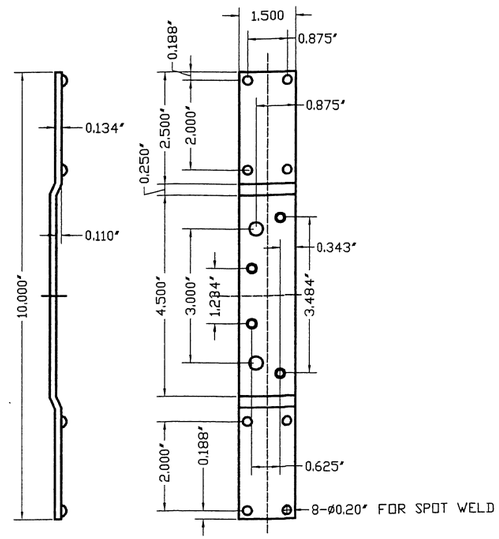

③ DOOR HINGE REINFORCING

MATERIAL:
GAUGE 10 (0.134") MINIMUM
GALVANNEAL

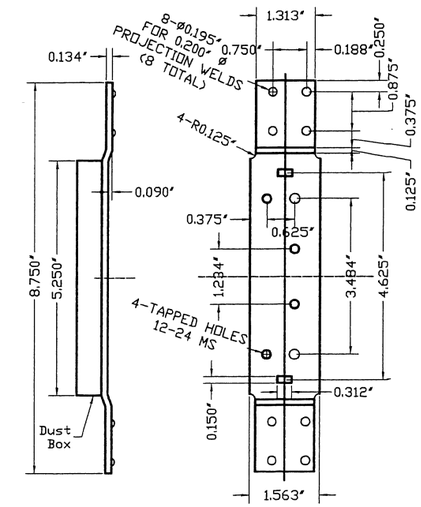

④ 4 1/2" FRAME HINGE REINFORCING

MATERIAL:
GAUGE 10 (0.134" MINIMUM)
GALVANNEAL

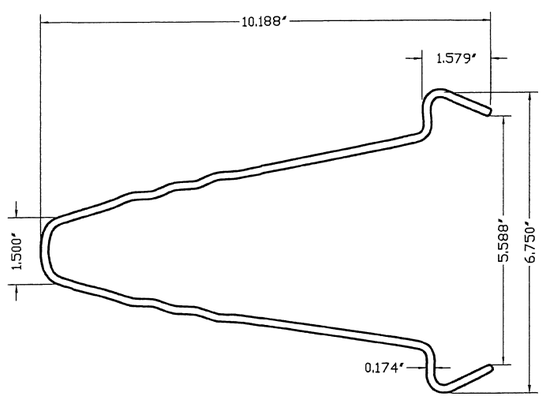

⑥ WIRE ANCHOR

STEEL WIRE ANCHORS
(0.134" DIA, 10 GAGE, 18 5/8"
EMBEDMENT LENGTH)
IN HORIZ.

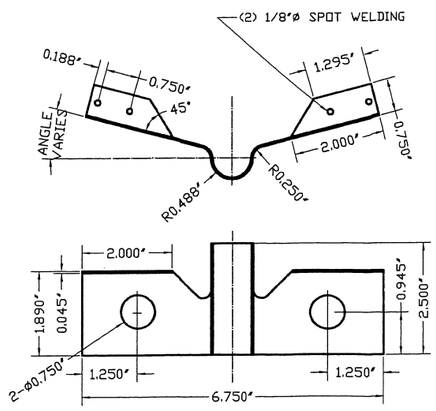

⑧A EMA BUTTERFLY ANCHOR (PART #RT1-008)

MATERIAL: 18 GA. (0.042") ... IN COAT

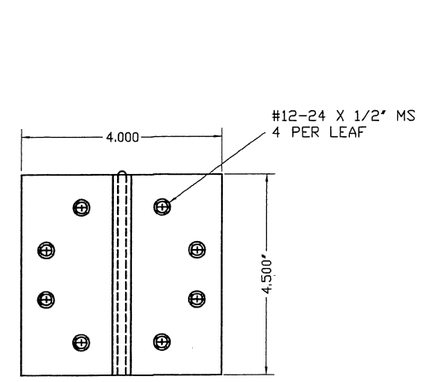

⑩ HINGES-HAGER BB1279

t=0.134" THICK

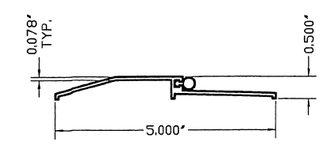

⑯ EXTRUDED ALUMINUM THRESHOLD NGP #950NA W/ NEOPRENE BULB

PRODUCT APPROVED
as complying with the Florida Building Code
NOA-No. 17-1227.15
Approval Date 05/31/2018
By
Miami-Dade Product Control

COMPONENTS

WALTER A. TILLIT JR. LICENSE No. 44167 STATE OF FLORIDA PROFESSIONAL ENGINEER

3/29/18

P.E. SEAL/SIGNATURE/DATE

FLORIDA BUILDING CODE (HIGH VELOCITY HURRICANE ZONE)

TILTECO INC.
TILLIT TESTING & ENGINEERING COMPANY
6355 N.W. 36th. St., Ste. 305, VIRGINIA GARDENS, Fl. 33166
Phone : (305)871-1530 . Fax : (305)871-1531
EB-0006719
WALTER A. TILLIT Jr. P.E.
FLORIDA Lic. # 44167

OUTSWING SERIES LS 18GA SKIN FLUSH COMMERCIAL DOUBLE & SINGLE STEEL DOOR W/ SERIES "AS" 16GA FRAME

DAYBAR INDUSTRIES LTD.
50 WEST DRIVE, BRAMPTON,
ON CANADA, L6T 2J4
TEL: 905 625-8000 FAX: 905 625-4204

REV. NO	DESCRIPTION	DATE	REV. No	DESCRIPTION	DATE
1	M.D.C COMMENTS	3/21/18	3	-	-
2	-	-	4	-	-

M.L.
DRAWN BY:

11/11/17
DATE:

17-010
DRAWING No.

SHEET 3 OF 14

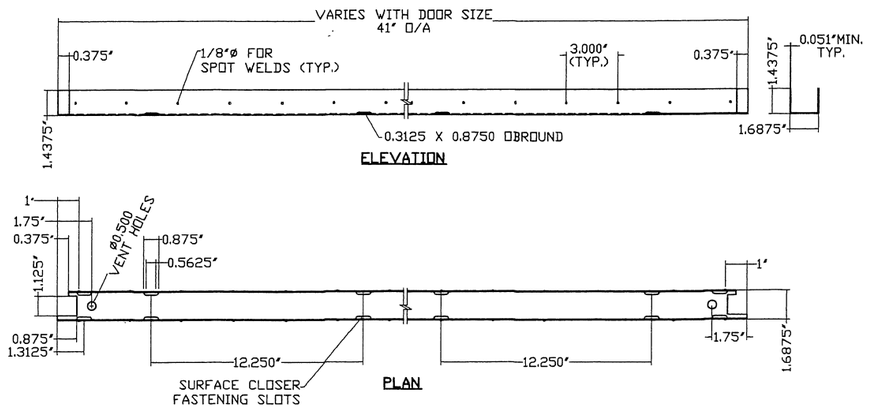

(18) DOOR END CHANNEL REINFORCEMENT

MATERIAL:
16 GAUGE (0.051) MINIMUM
GALVANNEAL

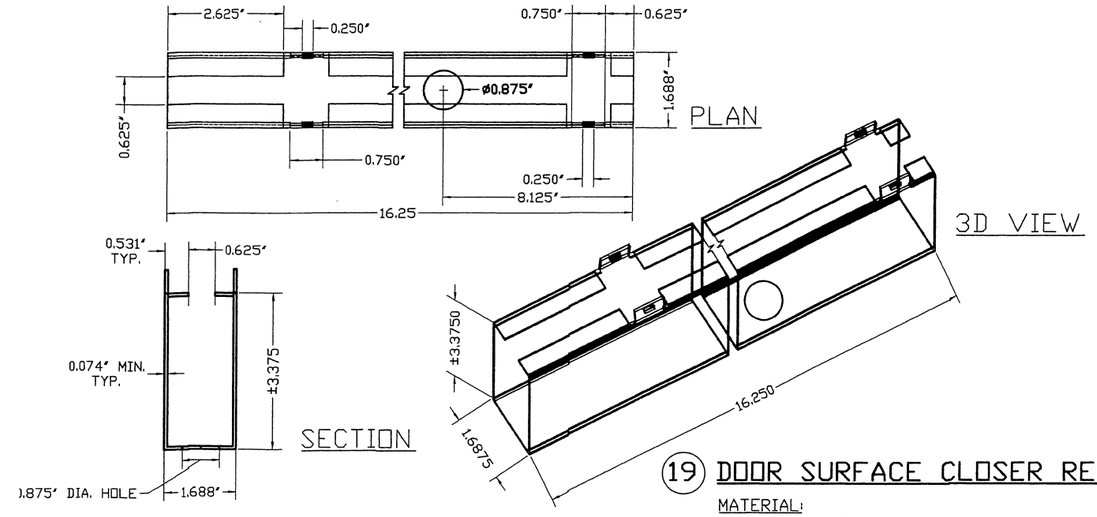

(19) DOOR SURFACE CLOSER REINFORCING

MATERIAL:
14 GAUGE (0.072")
MINIMUM GALVANNEAL

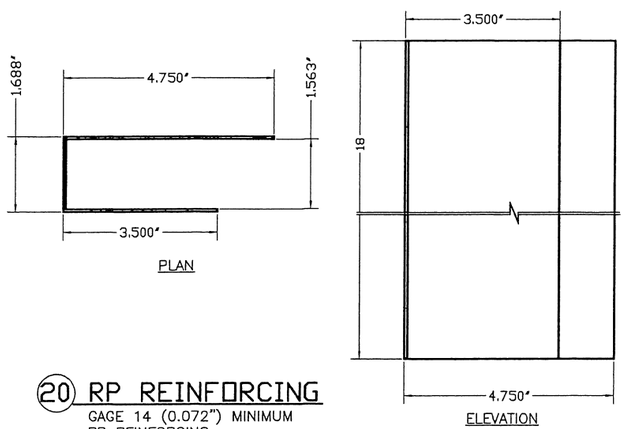

(20) RP REINFORCING

GAGE 14 (0.072") MINIMUM
RP REINFORCING
GALVANNEAL

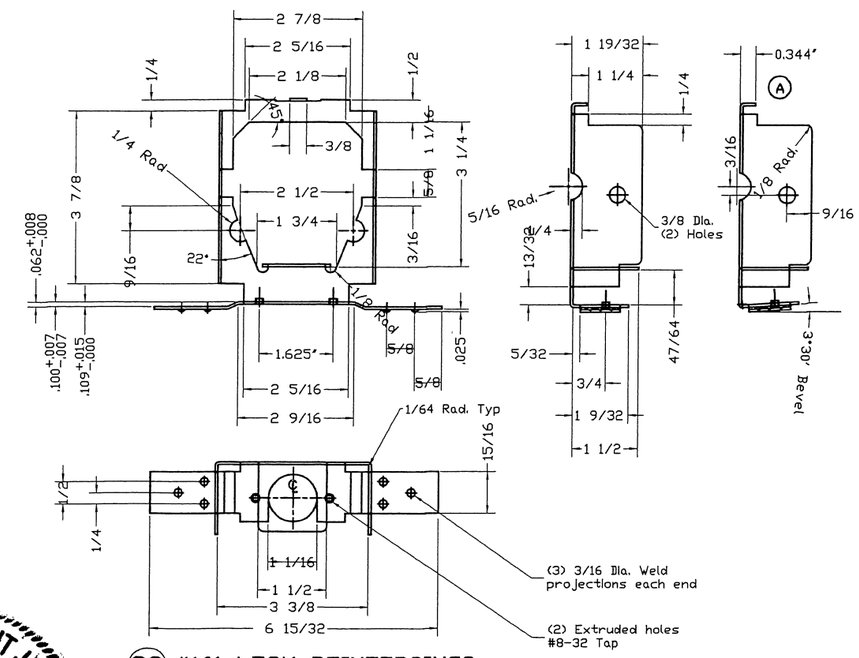

(22) #161 LOCK REINFORCINGS

PRODUCT APPROVED
as complying with the Florida Building Code
NOA-No. 17-1227.15
Approval Date 05/31/2018
By
Miami-Dade Product Control

COMPONENTS (CONTINUED)

WALTER A. TILLIT JR. LICENSE No. 44167 STATE OF FLORIDA PROFESSIONAL ENGINEER

8/29/18

P.E. SEAL/SIGNATURE/DATE

FLORIDA BUILDING CODE (HIGH VELOCITY HURRICANE ZONE)

TILTECO INC.
TILLIT TESTING & ENGINEERING COMPANY
6355 N.W. 36th. St., Ste. 305, VIRGINIA GARDENS, Fl. 33166
Phone : (305)871-1530 . Fax : (305)871-1531
EB-0006719
WALTER A. TILLIT Jr. P.E.
FLORIDA Lic. # 44167

OUTSWING SERIES LS 18GA SKIN FLUSH COMMERCIAL DOUBLE & SINGLE STEEL DOOR W/ SERIES "AS" 16GA FRAME

DAYBAR INDUSTRIES LTD.
50 WEST DRIVE, BRAMPTON,
ON CANADA, L6T 2J4
TEL: 905 625-8000 FAX: 905 625-4204

REV. NO	DESCRIPTION	DATE	REV. No	DESCRIPTION	DATE
1			3	–	–
2	–	–	4	–	–

M.L.
DRAWN BY:

11/11/17
DATE:

17-010
DRAWING No.

SHEET 4 OF 14

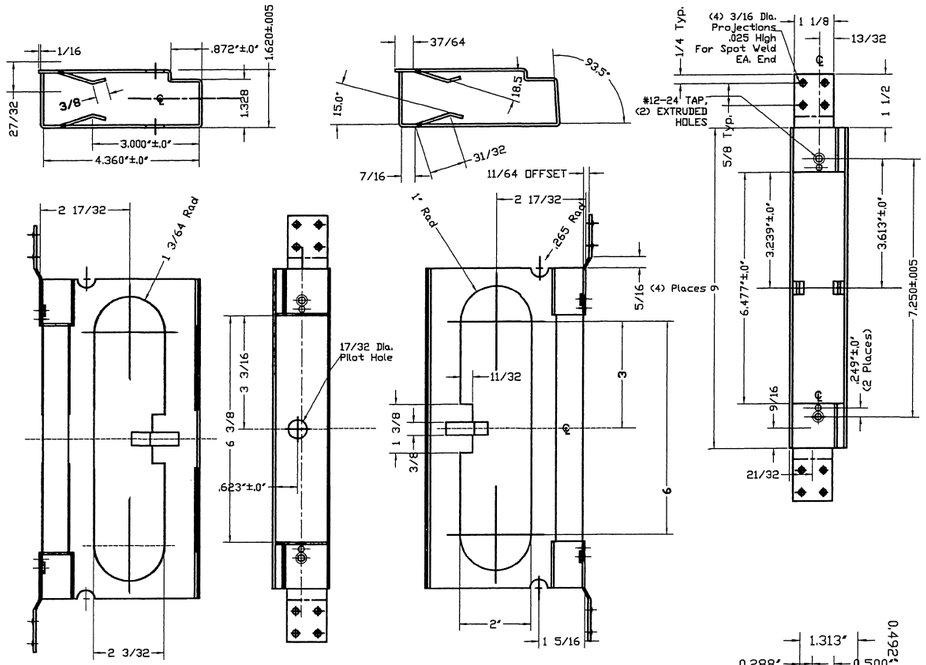

26 ANSI #A115.1 #86 MORTISE LOCK REINFORCEMENT

MATERIAL: 14GA. (.072) ELECTRO ZINC COATED STEEL

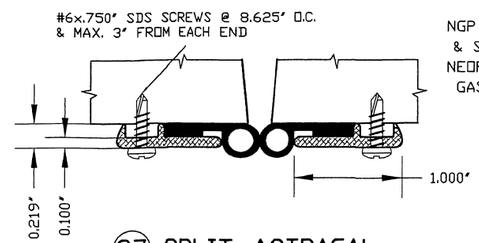

27 SPLIT ASTRAGAL

W/ NEOPRENE BULB

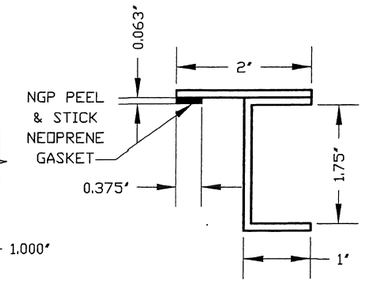

28 Z ASTRAGAL

2 PCS.

SEE SHEET 13

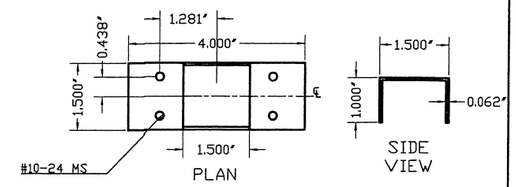

29 CVR MOUNTING TAB

14 GAGE , GALVANNEAL

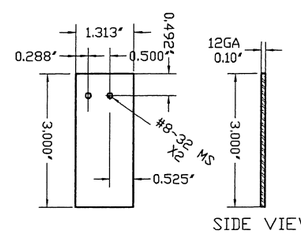

31 FLUSHBOLT TAB REINFORCEMENT

12 GAGE

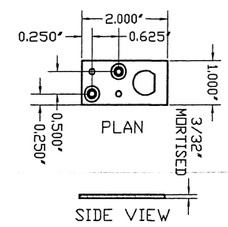

32 GUIDE FOR 33

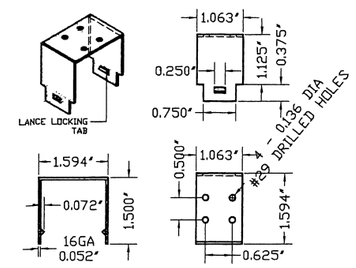

33 REVERSIBLE FLUSH BOLT REINFORCING GUIDE PLATE

TOP & BOTTOM

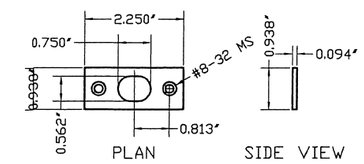

34 FLUSHBOLT STRIKE PLATE

TOP & BOTTOM

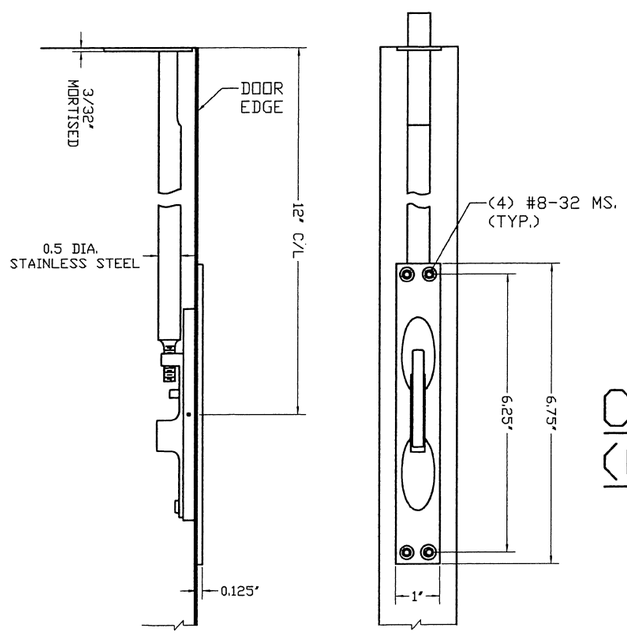

30 FLUSHBOLT ROCKWOOD 556 WS

COMPONENTS (CONTINUED)

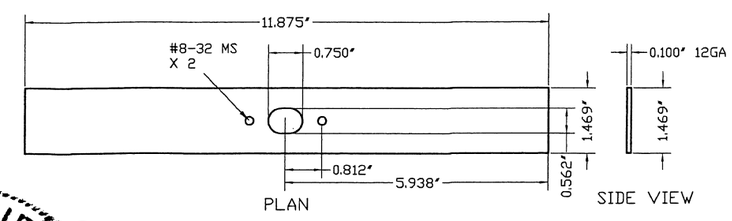

25 FLAT FLUSHBOLT REINFORCING FOR STRIKE 34

PRODUCT APPROVED
as complying with the Florida Building Code
NOA-No. 17-1227.15
Approval Date 05/31/2018
By
Miami-Dade Product Control

WALTER A. TILLIT JR. LICENSE No. 44167 STATE OF FLORIDA PROFESSIONAL ENGINEER

3/29/18

P.E. SEAL/SIGNATURE/DATE

FLORIDA BUILDING CODE (HIGH VELOCITY HURRICANE ZONE)

TILTECO INC.
TILLIT TESTING & ENGINEERING COMPANY
6355 N.W. 36th. St., Ste. 305, VIRGINIA GARDENS, Fl. 33166
Phone : (305)871-1530 . Fax : (305)871-1531
EB-0006719
WALTER A. TILLIT Jr. P.E.
FLORIDA Lic. # 44167

OUTSWING SERIES LS 18GA SKIN FLUSH COMMERCIAL DOUBLE & SINGLE STEEL DOOR W/ SERIES "AS" 16GA FRAME

DAYBAR INDUSTRIES LTD.
50 WEST DRIVE, BRAMPTON, ON CANADA, L6T 2J4
TEL: 905 625-8000 FAX: 905 625-4204

REV. NO	DESCRIPTION	DATE	REV. No	DESCRIPTION	DATE
1	M.D.C COMMENTS	3/21/18	3	-	-
2	-	-	4	-	-

M.L. DRAWN BY:
11/11/17 DATE:
17-010 DRAWING No.
SHEET 5 OF 14

BILL OF MATERIALS OUTSWING DOOR:

ITEM	DESCRIPTION	BASIC DIMENSIONS, MATERIAL OR ADDITIONAL DETAILS
1	16 GAUGE WELDED FRAME	AS 5 3/4" JAMB DEPTH X 2" FACE X .051" MIN. GALVANNEAL (Fu=53Ksi, Fy=42Ksi)
2	18 GAUGE FLUSH DOOR COMMERCIAL STEEL	1 3/4" THICK X (.041 MIN) GALVANNEAL (Fu=52Ksi, Fy=42Ksi); C/W PAPER HONEY COMB
3	HINGE REINFORCINGS (DOOR)	1 1/2" X 10" X 10 GAUGE GALVANNEAL (.134 MIN)
4	HINGE REINFORCINGS (FRAME)	1 1/2" X 8 3/4" X 10 GAUGE GALVANNEAL (.134 MIN)
6	WIRE MASONRY FRAME ANCHOR	9 1/2" LONG X 10 GAUGE (.134 MIN) Fu=95.9 Ksi Fy=40.2 Ksi
8	EMA ANCHOR BOLTS	3/8" X 5" STEEL UNICAN-SLEEVE ANCHOR, 2 1/4" EMBEDMENT & 3" MIN. E.D.
8A	EMA BUTTERFLY ANCHOR (PART #PT1-008)	18 GAUGE (0.042") STEEL SATIN COAT
10	HINGES-HAGER BB1191	4.5" X 4" STANDARD WEIGHT (.134 THICK)
11	VON DUPRIM #9847F CVR EXIT DEVICE	FASTENED W/ (4) 10-24x1" PH MS W/SEX BOLT & (2) 10-24x3/4" PH MS W/ SEX BOLT
12	MORTISE DEVICE: SCHLAGE L9000 SERIES W/O DEADBOLT	FASTENED W/ (2) 8-32x1 1/4" FH MS, FLUSH MOUNT METALLIC STRIKE PLATE FASTENED W/ (2) 12x3/4" FH SMS
13	CYLINDRICAL LOCK: SCHLAGE D SERIES	FASTENED W/ (2) 10-32x2 3/8" PH MS; FLUSH MOUNT METALLIC STRIKE PLATE FASTENED W/ (2) 12x3/4" FH SMS
15	WEATHER STRIP: NATIONAL GUARD PRODUCTS #120NA	SECURED WITH DOUBLE ROW OF #6 X 1/2" SMS SCREWS @ 1" FROM EA. END & BALANCE @ 4" O.C.
16	THRESHOLD: NATIONAL GUARD PRODUCTS #950NA	EXTRUDED ALUMINUM 6063-T6, 0.078" THK. W/ NEOPRENE BULB
17	CAULKING: GE SILICONE II	N/A
18	DOOR END CHANNEL REINFORCEMENT	16 GAGE GALVANNEAL STEEL
19	DOOR SURFACE CLOSER REINFORCEMENT	14 GAGE (0.072" MIN.) x 3 1/2" x 1.6875 x 16.250" LONG. GALVANNEAL.
20	RP REINFORCING	14 GAGE (0.072" MIN.) GALVANNEAL
22	#161 LOCK EDGE REINFORCING	16 GAGE (0.051" MIN.)
25	THRESHOLD ANCHOR	1/4"Ø ULTRACONS BY ELCO CONSTRUCTION PRODUCTS , 1 3/4" MIN. EMBEDMENT & 3" MIN. E.D @ f'c=3ksi CONCRETE SILL
26	MORTISE LOCK REINFORCEMENT COATED STEEL	ANSI #A115.1 #86, 0.072"MIN.
27	SPLIT ASTRAGAL W/ NEOPRENE BULB	ZERO #328
28	Z ASTRAGAL W/ NGP NEOPRENE GASKET	12 GAGE (0.094" MIN.), 2 PCS.
29	CVR MOUNTING TAB	14 GAGE (0.072" MIN.), GALVANNEAL
30	FLUSHBOLT ROCKWOOD 556 WS	
31	FLUSHBOLT TAB REINFORCEMENT	12 GAGE (0.094"MIN.), GALVANNEAL
32	GUIDE FOR (33)	GALVANNEAL
33	REVERSIBLE FLUSHBOLT REINFORCING GUIDE PLATE	16 GAGE (0.051" MIN.)
34	FLUSHBOLT STRIKE PLATE	12 GAGE (0.094" MIN.)
35	FLAT FLUSHBOLT REINFORCING FOR STRIKE (34)	12 GAGE (0.094" MIN.).

PRODUCT APPROVED
as complying with the Florida Building Code
NOA-No. 17-1227.15
Approval Date 05/31/2018
By
Miami-Dade Product Control

WALTER A. TILLIT JR. LICENSE No. 44167 STATE OF FLORIDA PROFESSIONAL ENGINEER

8/29/18

P.E. SEAL/SIGNATURE/DATE

FLORIDA BUILDING CODE (HIGH VELOCITY HURRICANE ZONE)

TILTECO INC.
TILLIT TESTING & ENGINEERING COMPANY
6355 N.W. 36th. St., Ste. 305, VIRGINIA GARDENS, Fl. 33166
Phone : (305)871-1530 . Fax : (305)871-1531
EB-0006719
WALTER A. TILLIT Jr. P.E.
FLORIDA Lic. # 44167

OUTSWING SERIES LS 18GA SKIN FLUSH COMMERCIAL DOUBLE & SINGLE STEEL DOOR W/ SERIES "AS" 16GA FRAME

DAYBAR INDUSTRIES LTD.
50 WEST DRIVE, BRAMPTON,
ON CANADA, L6T 2J4
TEL: 905 625-8000 FAX: 905 625-4204

REV. NO	DESCRIPTION	DATE	REV. No	DESCRIPTION	DATE
1	M.D.C COMMENTS	3/21/18	3	-	-
2	-	-	4	-	-

M.L.
DRAWN BY:
11/11/17
DATE:
17-010
DRAWING No.
SHEET 6 OF 14

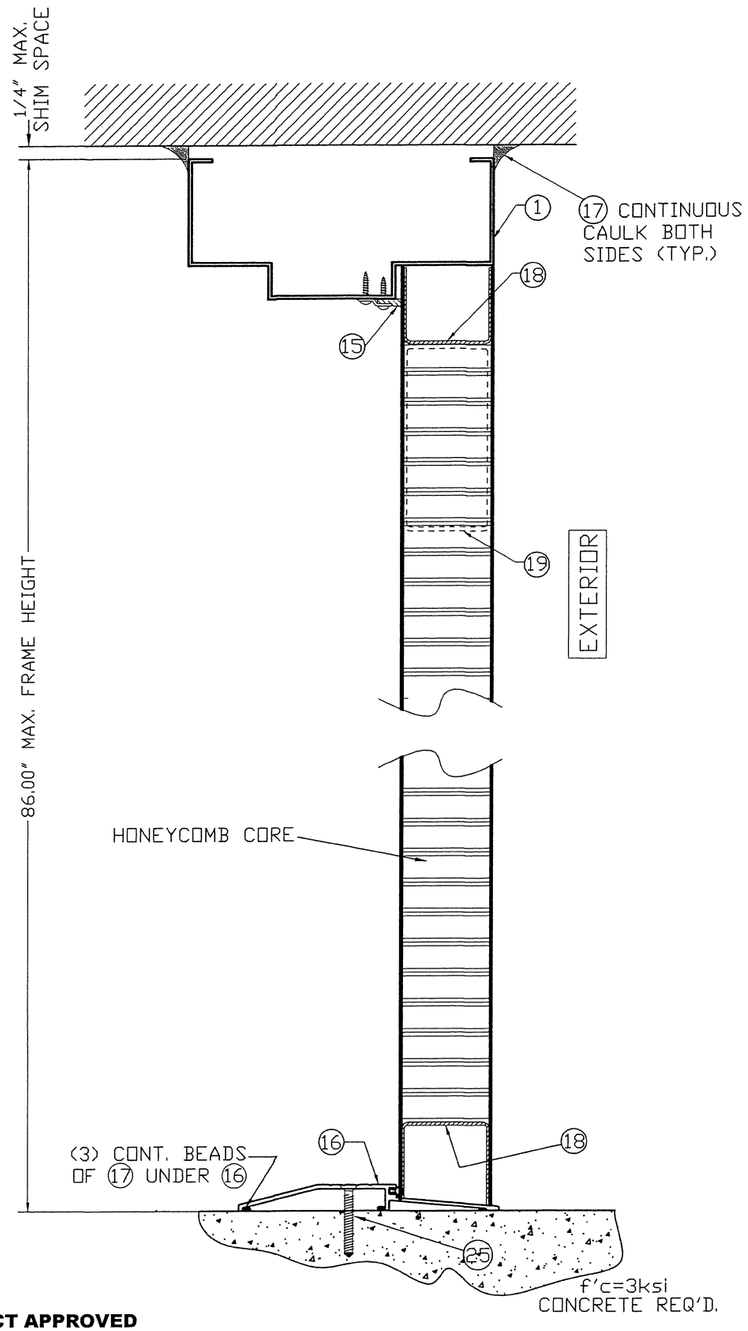

SECTION A1-A1 AT DOOR PANEL/FRAME

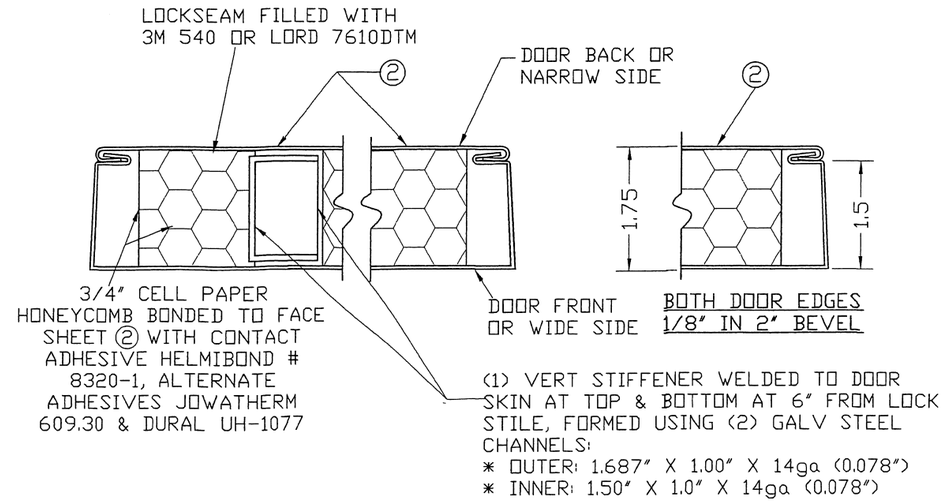

DOOR SECTION THROUGH EDGE SEAM, DETAIL X

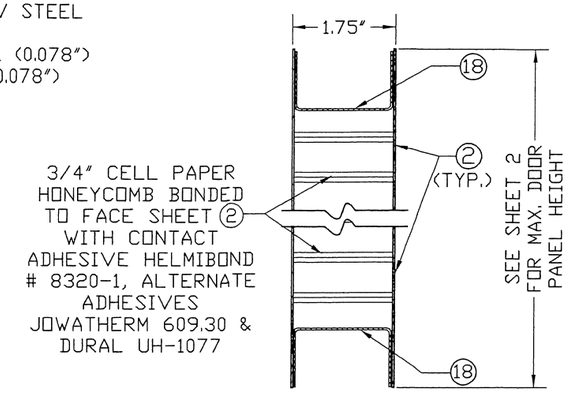

VERTICAL SECTION AT DOOR PANEL

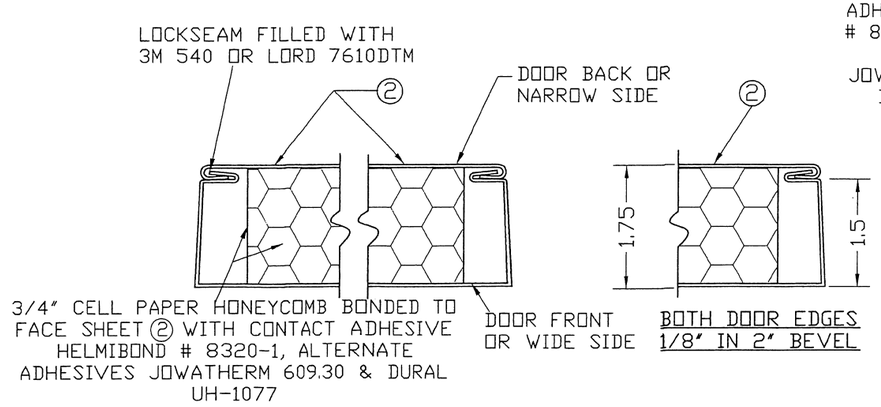

DOOR SECTION THROUGH EDGE SEAM, DETAIL X'

DOOR PANEL CONSTRUCTION

PRODUCT APPROVED
as complying with the Florida Building Code
NOA-No. 17-1227.15
Approval Date 05/31/2018
By
Miami-Dade Product Control

WALTER A. TILLIT JR. LICENSE No. 44167 STATE OF FLORIDA PROFESSIONAL ENGINEER

9/18

P.E. SEAL/SIGNATURE/DATE

FLORIDA BUILDING CODE (HIGH VELOCITY HURRICANE ZONE)

TILTECO INC.
TILLIT TESTING & ENGINEERING COMPANY
6355 N.W. 36th. St., Ste. 305, VIRGINIA GARDENS, Fl. 33166
Phone : (305)871-1530 . Fax : (305)871-1531
EB-0006719
WALTER A. TILLIT Jr. P.E.
FLORIDA Lic. # 44167

OUTSWING SERIES LS 18GA SKIN FLUSH COMMERCIAL DOUBLE & SINGLE STEEL DOOR W/ SERIES "AS" 16GA FRAME

DAYBAR INDUSTRIES LTD.
50 WEST DRIVE, BRAMPTON, ON CANADA, L6T 2J4
TEL: 905 625-8000 FAX: 905 625-4204

REV. NO	DESCRIPTION	DATE	REV. No	DESCRIPTION	DATE
1	M.D.C COMMENTS	3/21/18	3	–	–
2	–	–	4	–	–

M.L.
DRAWN BY:
11/11/17
DATE:
17-010
DRAWING No.
SHEET 7 OF 14

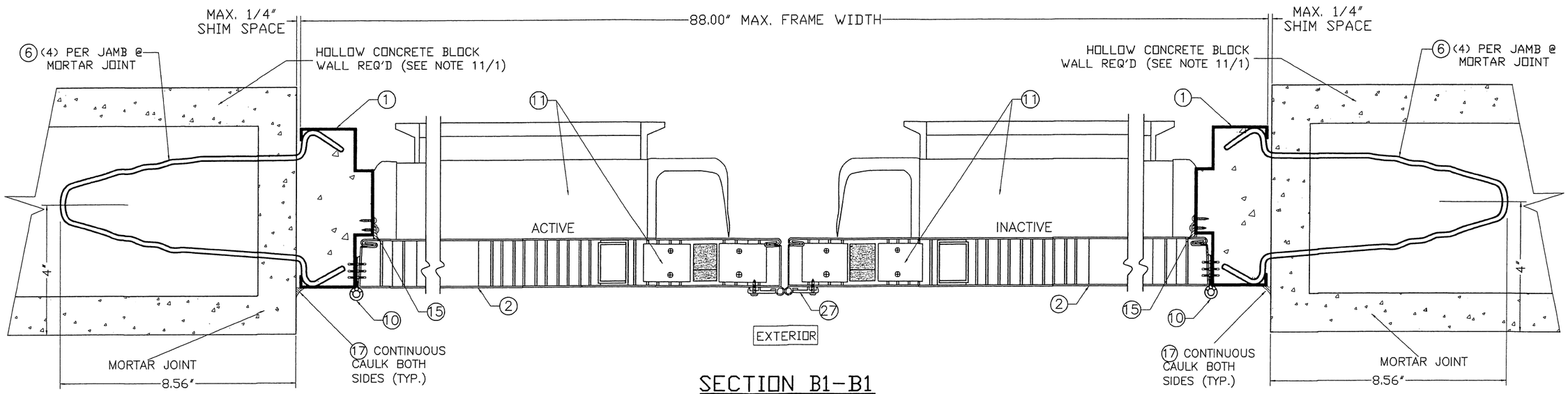

SECTION B1-B1

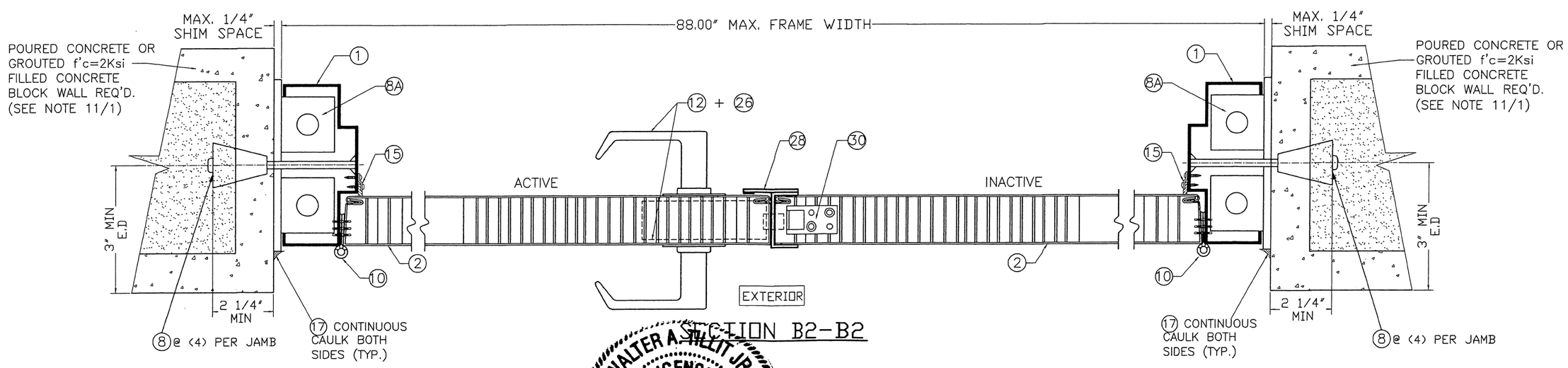

SECTION B2-B2

PRODUCT APPROVED
as complying with the Florida Building Code
NOA-No. 17-1227.15
Approval Date 05/31/2018
By
Miami-Dade Product Control

WALTER A. TILLIT JR. LICENSE No. 44167 STATE OF FLORIDA PROFESSIONAL ENGINEER

8/29/18

P.E. SEAL/SIGNATURE/DATE

FLORIDA BUILDING CODE (HIGH VELOCITY HURRICANE ZONE)

TILTECO INC.
TILLIT TESTING & ENGINEERING COMPANY
6355 N.W. 36th. St., Ste. 305, VIRGINIA GARDENS, Fl. 33166
Phone : (305)871-1530 . Fax : (305)871-1531
EB-0006719
WALTER A. TILLIT Jr. P.E.
FLORIDA Lic. # 44167

OUTSWING SERIES LS 18GA SKIN FLUSH COMMERCIAL DOUBLE & SINGLE STEEL DOOR W/ SERIES "AS" 16GA FRAME

DAYBAR INDUSTRIES LTD.
50 WEST DRIVE, BRAMPTON,
ON CANADA, L6T 2J4
TEL.: 905 625-8000 FAX: 905 625-4204

REV. NO	DESCRIPTION	DATE	REV. No	DESCRIPTION	DATE
1			3	-	-
2	-	-	4	-	-

M.L.
DRAWN BY:

11/11/17
DATE:

17-010
DRAWING No.

SHEET 8 OF 14

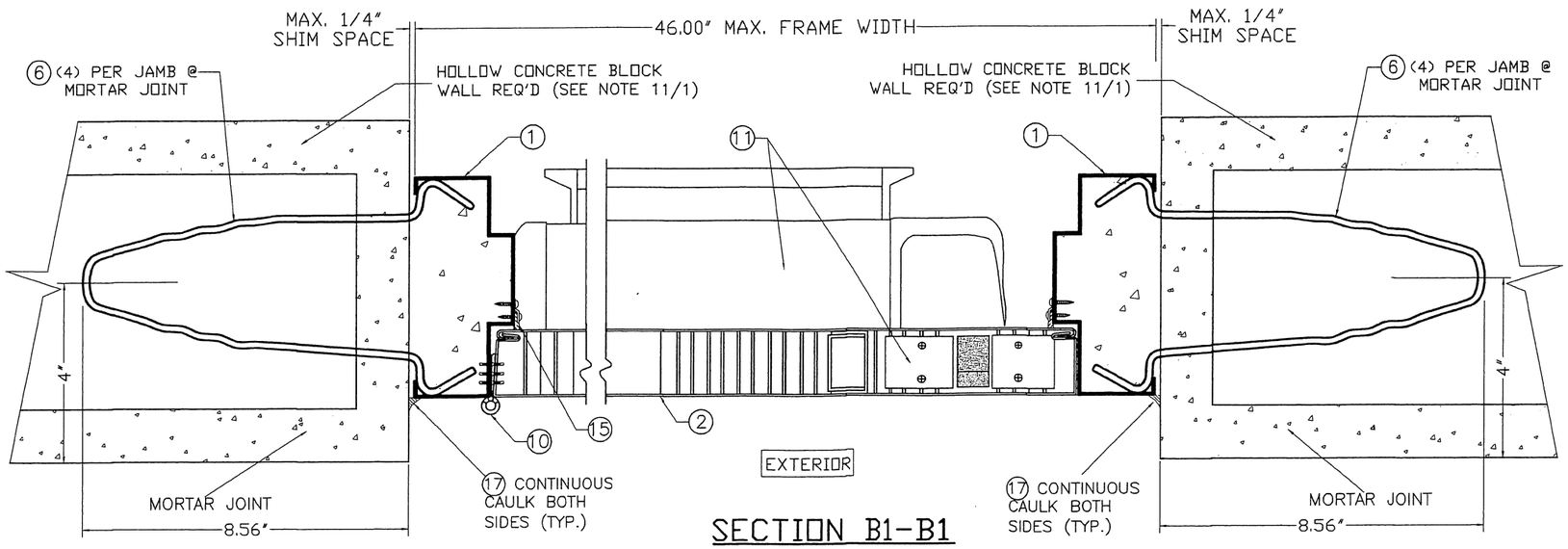

SECTION B1-B1

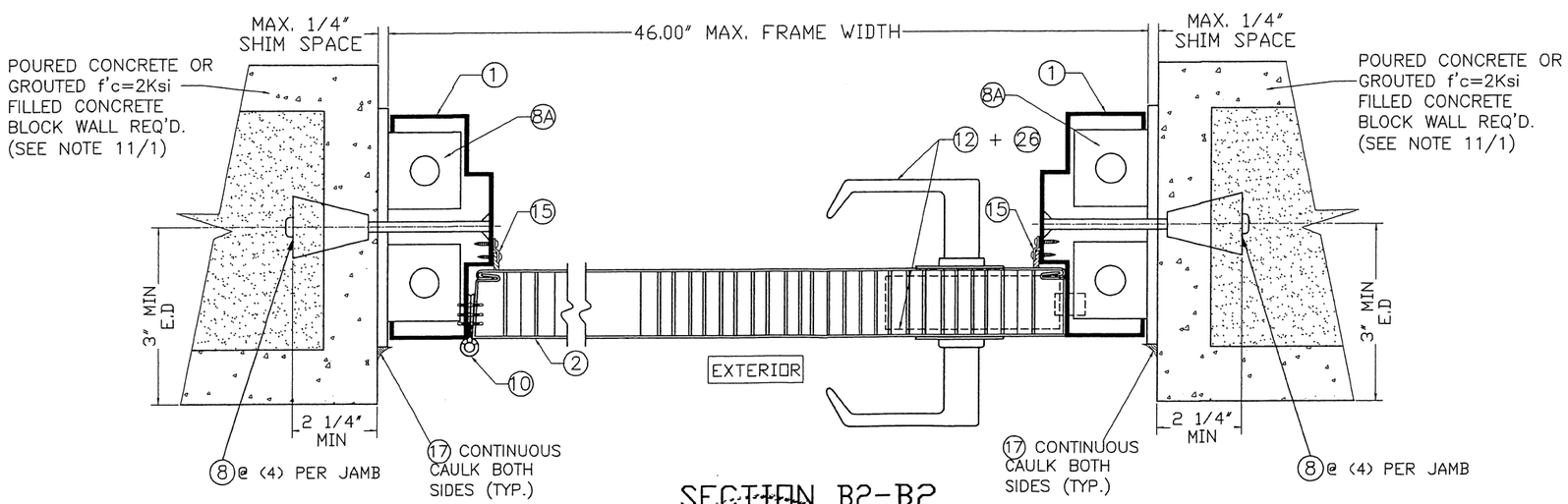

SECTION B2-B2

WALTER A. TILLIT JR. LICENSE No. 44167 STATE OF FLORIDA PROFESSIONAL ENGINEER

2/9/18

P.E. SEAL/SIGNATURE/DATE

PRODUCT APPROVED
as complying with the Florida Building Code
NOA-No. 17-1227.15
Approval Date 05/31/2018
By
Miami-Dade Product Control

FLORIDA BUILDING CODE (HIGH VELOCITY HURRICANE ZONE)

TILTECO INC.

TILLIT TESTING & ENGINEERING COMPANY
6355 N.W. 36th. St., Ste. 305, VIRGINIA GARDENS, Fl. 33166
Phone : (305)871-1530 . Fax : (305)871-1531
EB-0006719
WALTER A. TILLIT Jr. P.E.
FLORIDA Lic. # 44167

OUTSWING SERIES LS 18GA SKIN FLUSH COMMERCIAL DOUBLE & SINGLE STEEL DOOR W/ SERIES "AS" 16GA FRAME

DAYBAR INDUSTRIES LTD.
50 WEST DRIVE, BRAMPTON,
ON CANADA, L6T 2J4
TEL: 905 625-8000 FAX: 905 625-4204

REV. NO	DESCRIPTION	DATE	REV. No	DESCRIPTION	DATE
1			3	–	–
2	–	–	4	–	–

M.L.
DRAWN BY:

11/11/17
DATE:

17-010
DRAWING No.

SHEET 8A OF 14

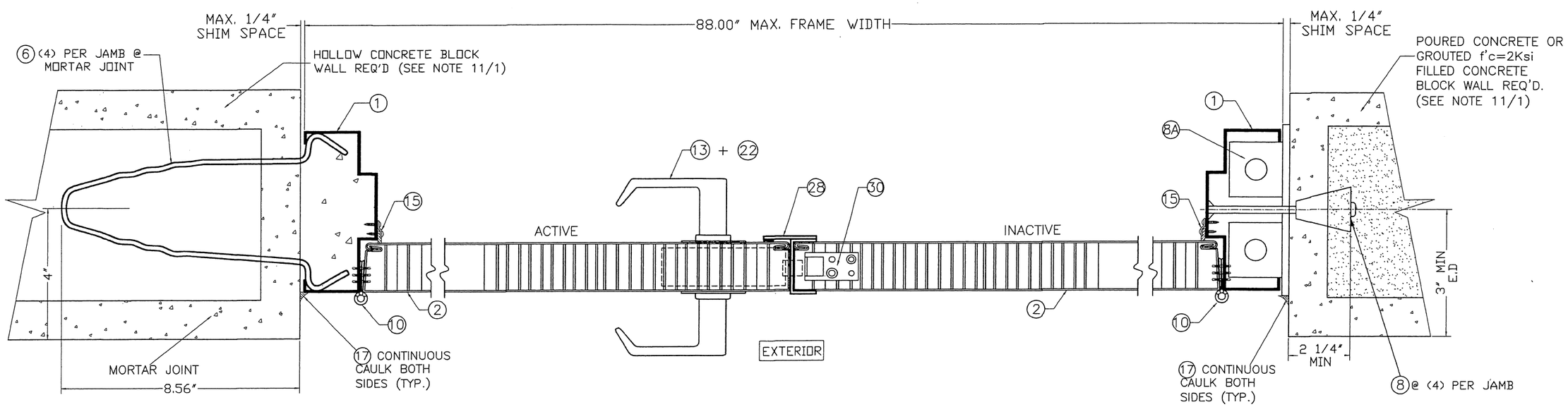

SECTION B3-B3

PRODUCT APPROVED
as complying with the Florida Building Code
NOA-No. 17-1227.15
Approval Date 05/31/2018
By
Miami-Dade Product Control

WALTER A. TILLIT JR. LICENSE No. 44167 STATE OF FLORIDA PROFESSIONAL ENGINEER

P.E. SEAL/SIGNATURE/DATE

FLORIDA BUILDING CODE (HIGH VELOCITY HURRICANE ZONE)

TILTECO INC.
TILLIT TESTING & ENGINEERING COMPANY
6355 N.W. 36th. St., Ste. 305, VIRGINIA GARDENS, Fl. 33166
Phone : (305)871-1530 , Fax : (305)871-1531
EB-0006719
WALTER A. TILLIT Jr. P.E.
FLORIDA Lic. # 44167

OUTSWING SERIES LS 18GA SKIN FLUSH COMMERCIAL DOUBLE & SINGLE STEEL DOOR W/ SERIES "AS" 16GA FRAME

DAYBAR INDUSTRIES LTD.
50 WEST DRIVE, BRAMPTON,
ON CANADA, L6T 2J4
TEL: 905 625-8000 FAX: 905 625-4204

REV. NO	DESCRIPTION	DATE	REV. No	DESCRIPTION	DATE
1	M.D.C COMMENTS	3/21/18	3	-	-
2	-	-	4	-	-

M.L.
DRAWN BY:
11/11/17
DATE:
17-010
DRAWING No.
SHEET 9 OF 14

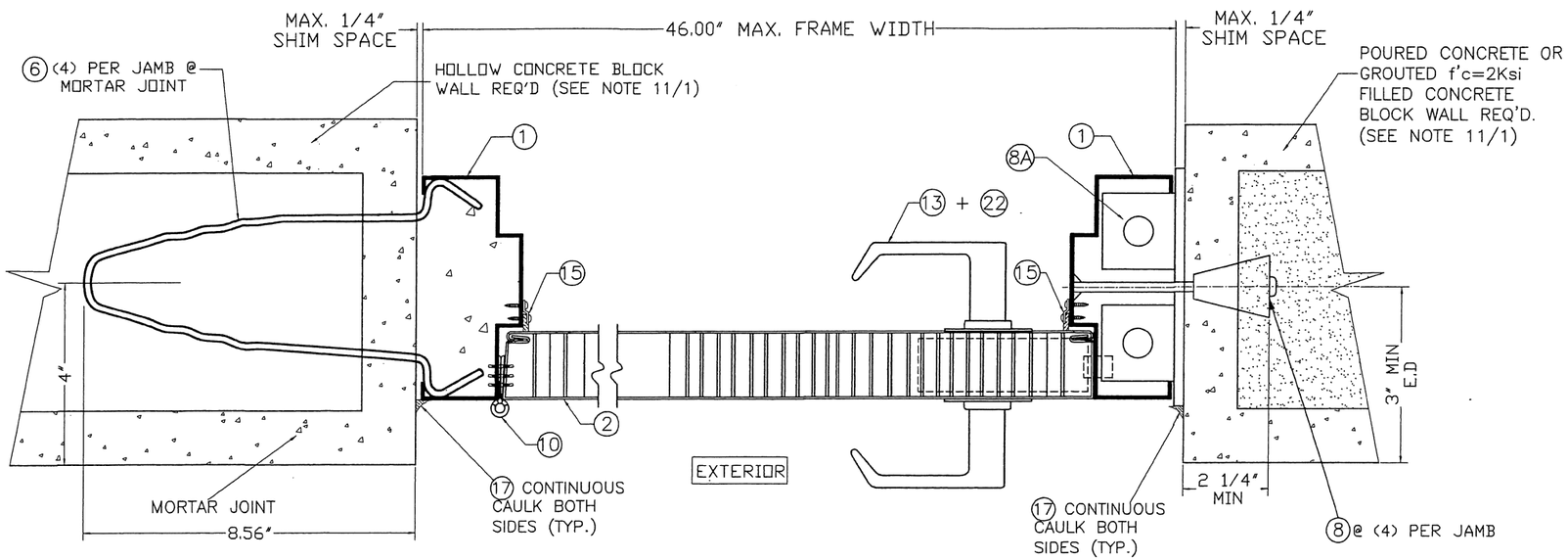

SECTION B3-B3

PRODUCT APPROVED
as complying with the Florida Building Code
NOA-No. 17-1227.15
Approval Date 05/31/2018
By
Miami-Dade Product Control

WALTER A. TILLIT JR. LICENSE No. 44167 STATE OF FLORIDA PROFESSIONAL ENGINEER

8/29/18

P.E. SEAL/SIGNATURE/DATE

FLORIDA BUILDING CODE (HIGH VELOCITY HURRICANE ZONE)

TILTECO INC.
TILLIT TESTING & ENGINEERING COMPANY
6355 N.W. 36th. St., Ste. 305, VIRGINIA GARDENS, Fl. 33166
Phone : (305)871-1530 . Fax : (305)871-1531
EB-0006719
WALTER A. TILLIT Jr. P.E.
FLORIDA Lic. # 44167

OUTSWING SERIES LS 18GA SKIN FLUSH COMMERCIAL DOUBLE & SINGLE STEEL DOOR W/ SERIES "AS" 16GA FRAME

DAYBAR INDUSTRIES LTD.
50 WEST DRIVE, BRAMPTON,
ON CANADA, L6T 2J4
TEL: 905 625-8000 FAX: 905 625-4204

REV. NO	DESCRIPTION	DATE	REV. No	DESCRIPTION	DATE
1	M.D.C COMMENTS	3/21/18	3	-	-
2	-	-	4	-	-

M.L.
DRAWN BY:
11/11/17
DATE:
17-010
DRAWING No.
SHEET 9A OF 14

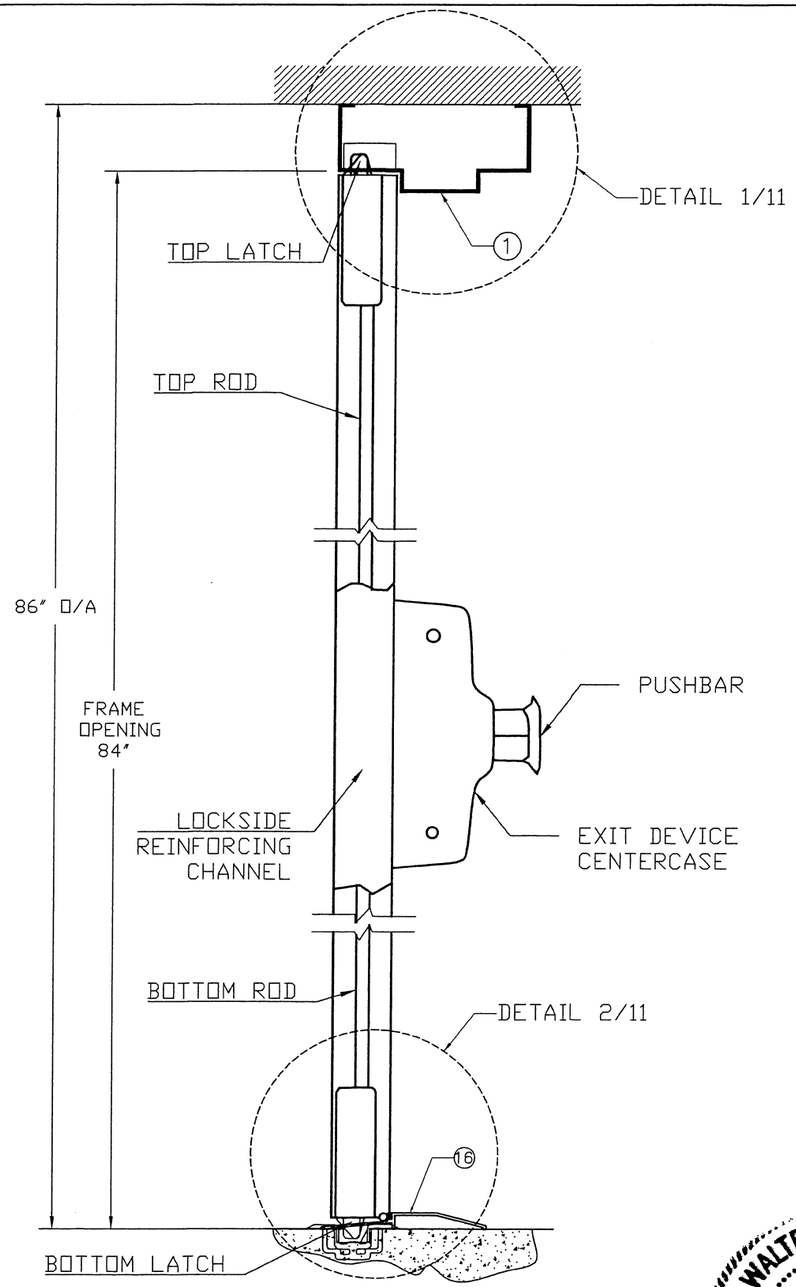

SECTION A2-A2

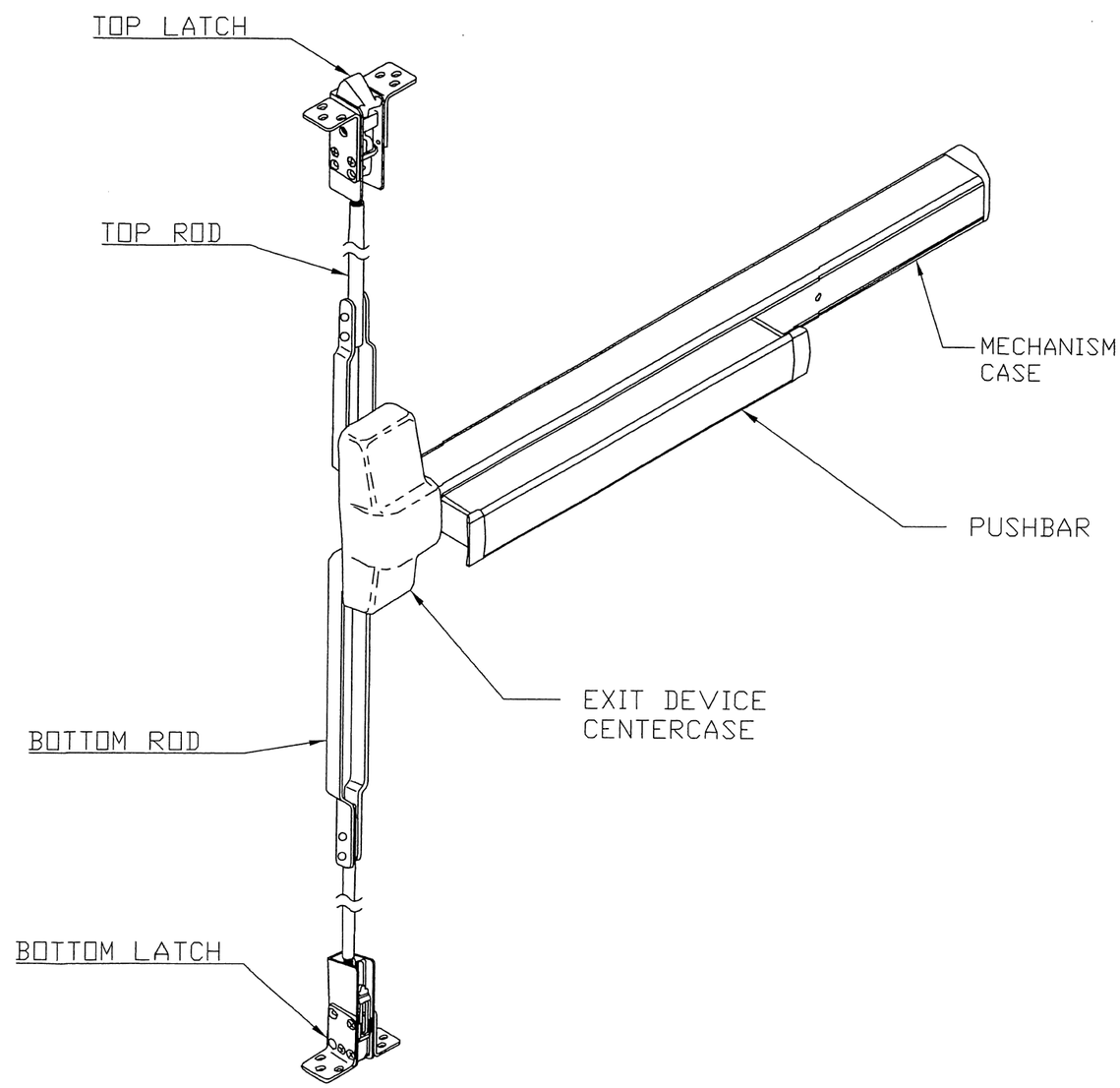

VON DUPRIN #9847F CVR EXIT DEVICE 11 ISOMETRIC

PRODUCT APPROVED
as complying with the Florida Building Code
NOA-No. 17-1227.15
Approval Date 05/31/2018
By
Miami-Dade Product Control

WALTER A. TILLIT JR. LICENSE No. 44167 STATE OF FLORIDA PROFESSIONAL ENGINEER

8/29/18

P.E. SEAL/SIGNATURE/DATE

FLORIDA BUILDING CODE (HIGH VELOCITY HURRICANE ZONE)

TILTECO INC.

TILLIT TESTING & ENGINEERING COMPANY
6355 N.W. 36th. St., Ste. 305, VIRGINIA GARDENS, Fl. 33166
Phone : (305)871-1530 . Fax : (305)871-1531
EB-0006719
WALTER A. TILLIT Jr. P.E.
FLORIDA Lic. # 44167

OUTSWING SERIES LS 18GA SKIN FLUSH COMMERCIAL DOUBLE & SINGLE STEEL DOOR W/ SERIES "AS" 16GA FRAME

DAYBAR INDUSTRIES LTD.
50 WEST DRIVE, BRAMPTON,
ON CANADA, L6T 2J4
TEL: 905 625-8000 FAX: 905 625-4204

REV. NO	DESCRIPTION	DATE	REV. No	DESCRIPTION	DATE
1			3	–	–
2	–	–	4	–	–

M.L.
DRAWN BY:

11/11/17
DATE:

17-010
DRAWING No.

SHEET 10 OF 14

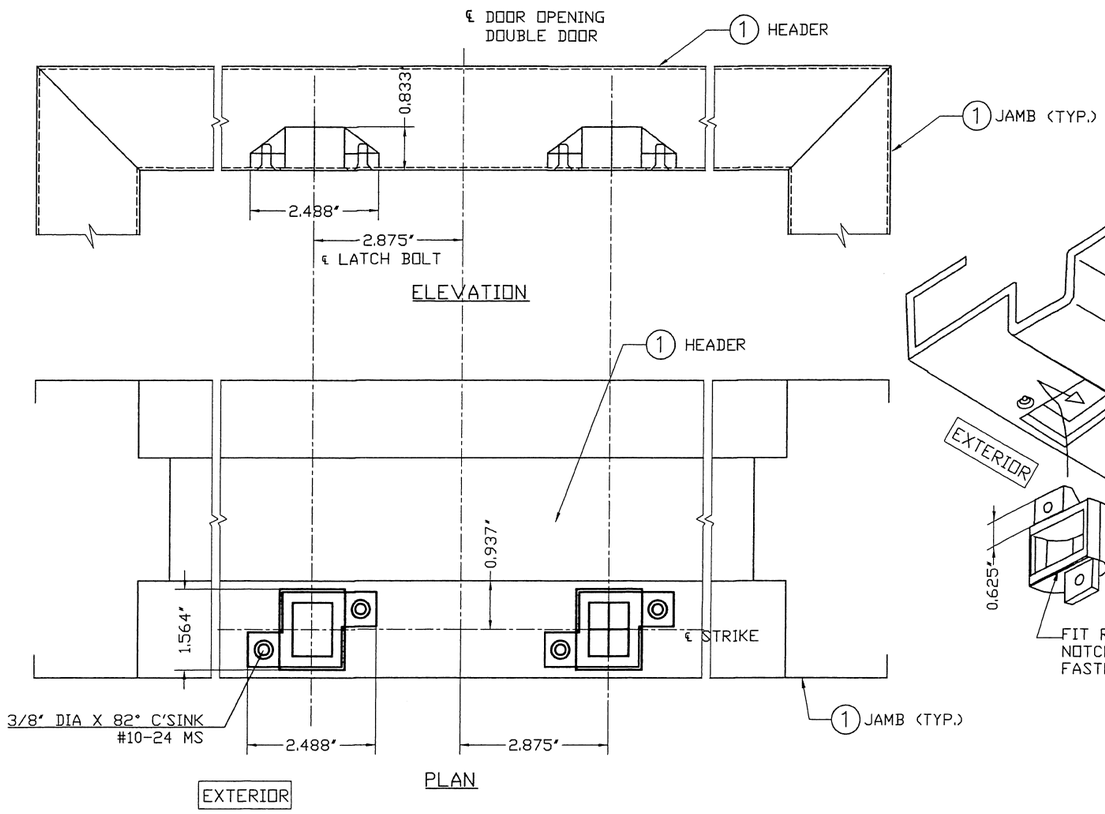

DETAIL 1:
VD#338 CVR STRIKE IN FRAME HEAD

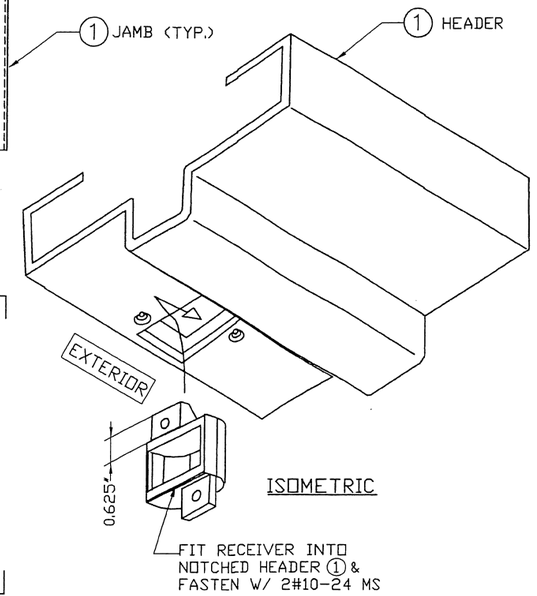

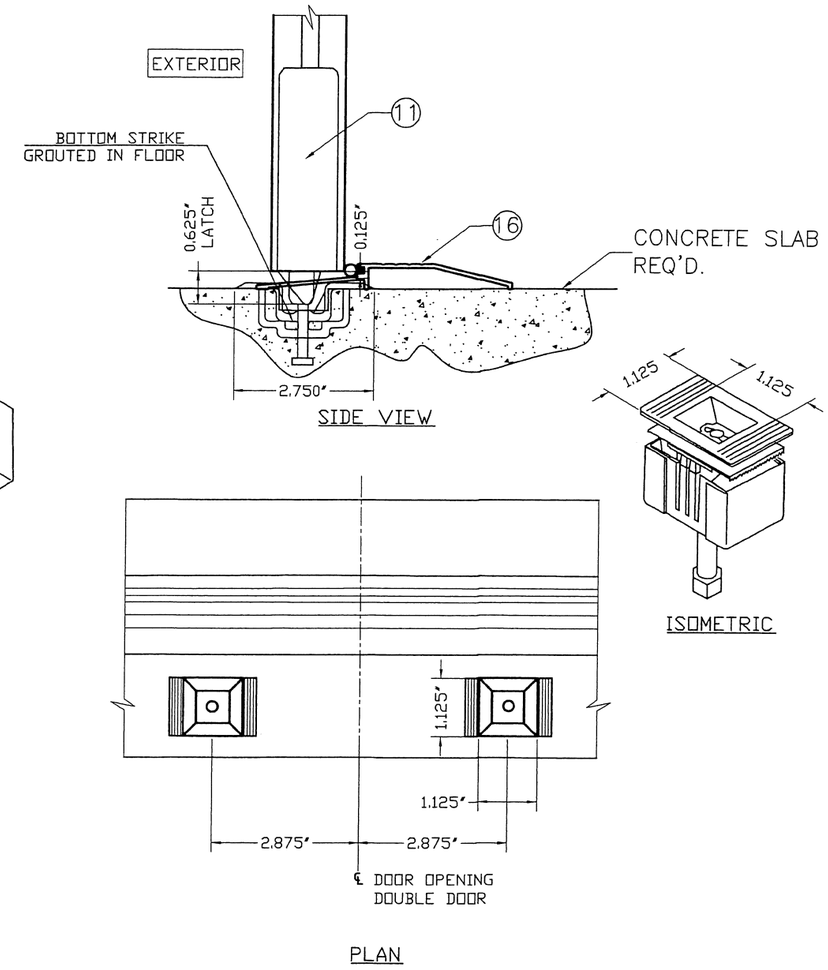

DETAIL 2:
VD #385A BOTTOM STRIKE IN THRESHOLD/FLOOR

PRODUCT APPROVED
as complying with the Florida Building Code
NOA-No. 17-1227.15
Approval Date 05/31/2018
By
Miami-Dade Product Control

WALTER A. TILLIT JR.
LICENSE
No. 44167
STATE OF FLORIDA
PROFESSIONAL ENGINEER

5/29/18

P.E. SEAL/SIGNATURE/DATE

FLORIDA BUILDING CODE (HIGH VELOCITY HURRICANE ZONE)

TILTECO INC.

TILLIT TESTING & ENGINEERING COMPANY
6355 N.W. 36th. St., Ste. 305, VIRGINIA GARDENS, Fl. 33166
Phone : (305)871-1530 . Fax : (305)871-1531
EB-0006719
WALTER A. TILLIT Jr. P.E.
FLORIDA Lic. # 44167

OUTSWING SERIES LS 18GA SKIN FLUSH COMMERCIAL DOUBLE & SINGLE STEEL DOOR W/ SERIES "AS" 16GA FRAME

DAYBAR INDUSTRIES LTD.
50 WEST DRIVE, BRAMPTON,
ON CANADA, L6T 2J4
TEL: 905 625-8000 FAX: 905 625-4204

REV. NO	DESCRIPTION	DATE	REV. No	DESCRIPTION	DATE
1	M.D.C COMMENTS	3/21/18	3	-	-
2	-	-	4	-	-

M.L.
DRAWN BY:

11/11/17
DATE:

17-010
DRAWING No.

SHEET 11 OF 14

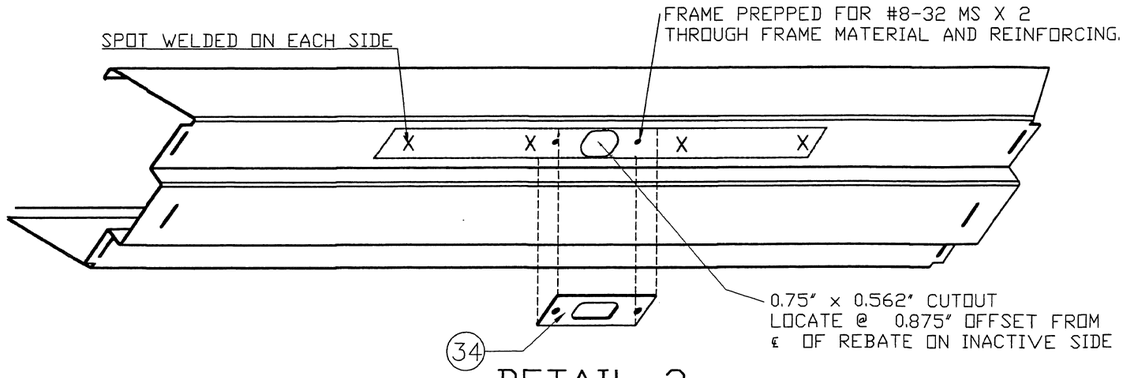

DETAIL 3
(AT TOP)

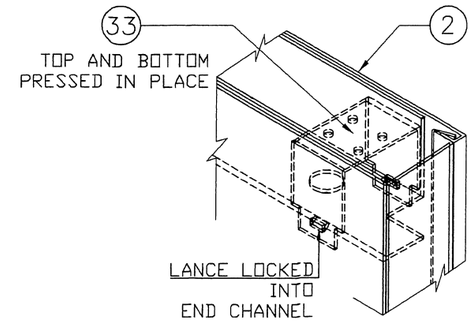

ISOMETRIC
(AT TOP AS SHOWN & AT BOTTOM)

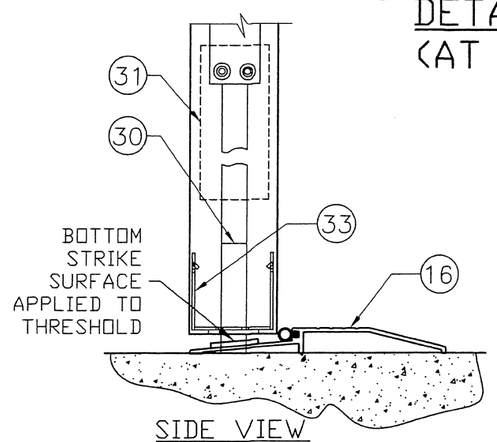

SIDE VIEW

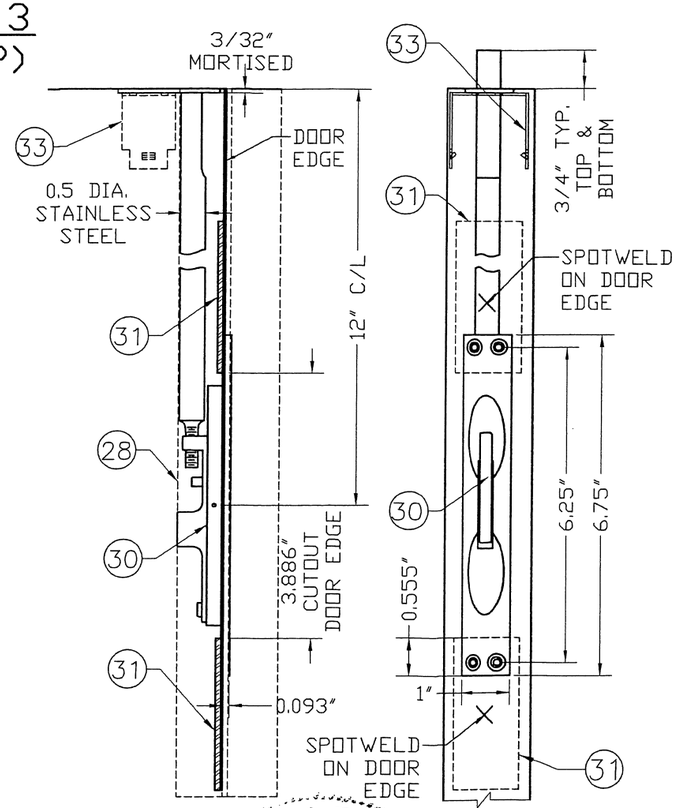

REQ'D. REINFORCEMENTS AT FLUSHBOLT
FOR (AND AT BOTTOM)

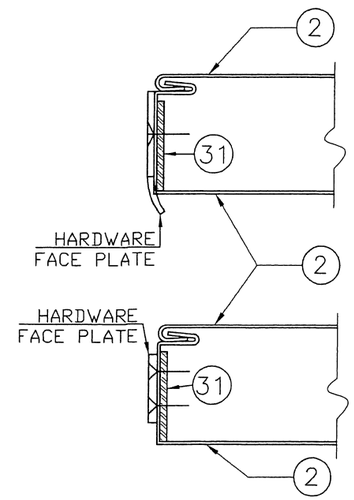

ASA AND FLUSHBOLT FACE PLATES ARE SURFACE MOUNTED AND SCREWED THROUGH DOOR MATERIAL AND REINFORCEMENTS.
ASTRAGAL ONLY HAS CUTOUTS TO CLEAR HARDWARE FACE PLATES

PLAN

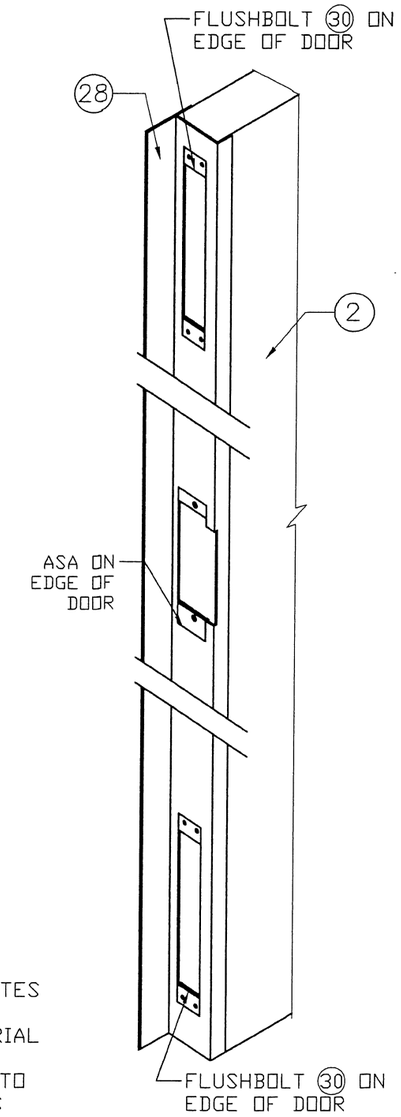

ISOMETRIC

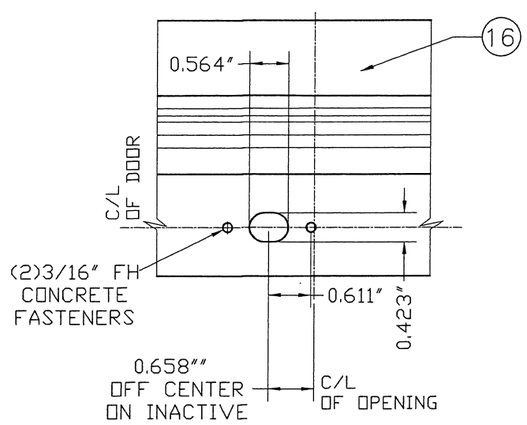

PLAN
STRIKE PLATES AT THRESHOLD

DETAIL 4
(AT BOTTOM)

PRODUCT APPROVED
as complying with the Florida Building Code
NOA-No. 17-1227.15
Approval Date 05/31/2018
By
Miami-Dade Product Control

WALTER A. TILLIT JR. LICENSE No. 44167 STATE OF FLORIDA PROFESSIONAL ENGINEER

8/29/18

P.E. SEAL/SIGNATURE/DATE

FLORIDA BUILDING CODE (HIGH VELOCITY HURRICANE ZONE)

TILTECO INC.
TILLIT TESTING & ENGINEERING COMPANY
6355 N.W. 36th. St., Ste. 305, VIRGINIA GARDENS, Fl. 33166
Phone : (305)871-1530 . Fax : (305)871-1531
EB-0006719
WALTER A. TILLIT Jr. P.E.
FLORIDA Lic. # 44167

OUTSWING SERIES LS 18GA SKIN FLUSH COMMERCIAL DOUBLE & SINGLE STEEL DOOR W/ SERIES "AS" 16GA FRAME

DAYBAR INDUSTRIES LTD.
50 WEST DRIVE, BRAMPTON, ON CANADA, L6T 2J4
TEL: 905 625-8000 FAX: 905 625-4204

REV. NO	DESCRIPTION	DATE	REV. No	DESCRIPTION	DATE
1	M.D.C COMMENTS	3/21/18	3	-	-
2	-	-	4	-	-

M.L.
DRAWN BY:
11/11/17
DATE:
17-010
DRAWING No.
SHEET 12 OF 14

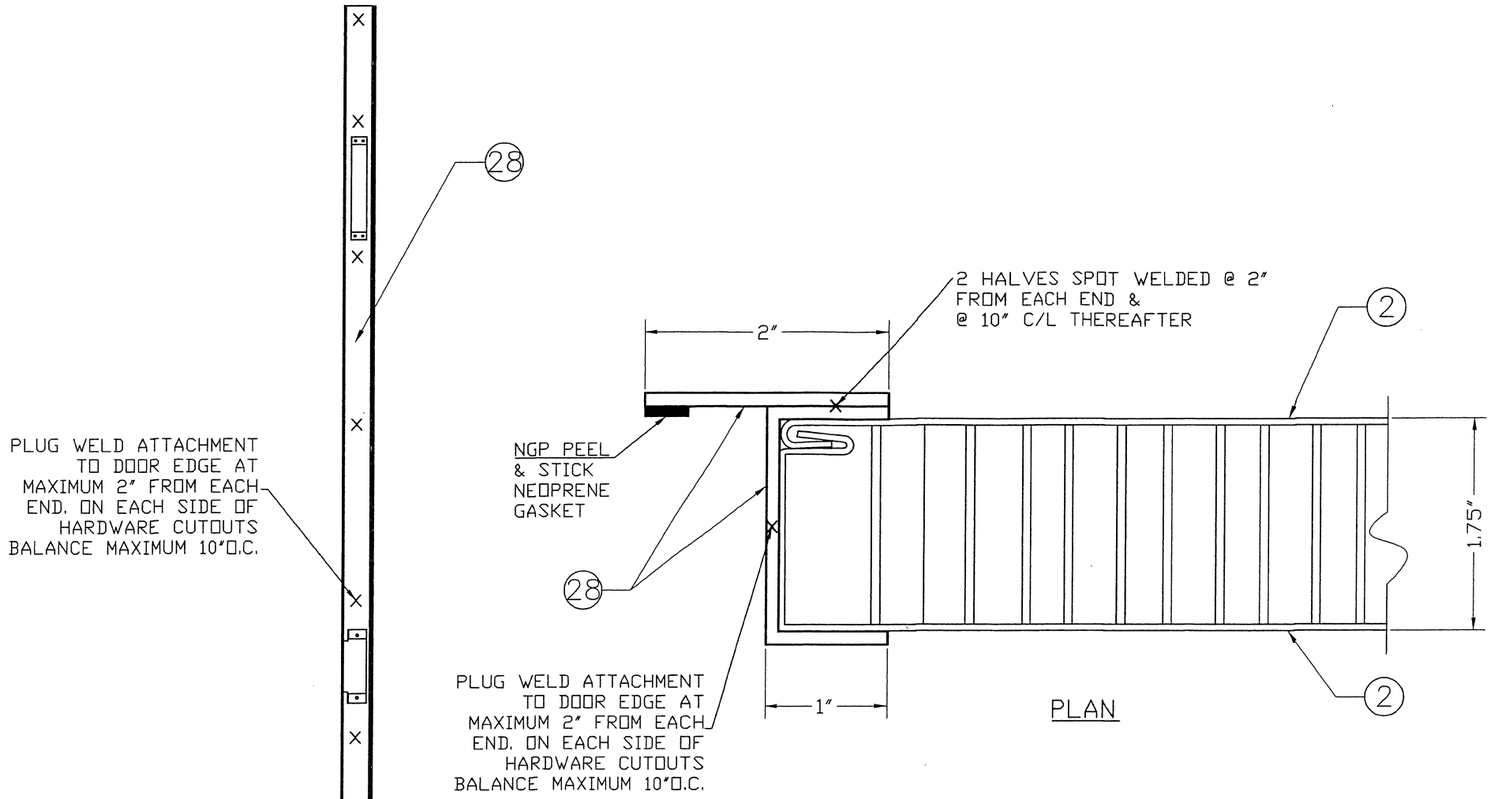

SIDE VIEW

Z ASTRAGAL 28 DETAIL

PRODUCT APPROVED
as complying with the Florida Building Code
NOA-No. 17-1227.15
Approval Date 05/31/2018
By
Miami-Dade Product Control

WALTER A. TILLIT JR. LICENSE No. 44167 STATE OF FLORIDA PROFESSIONAL ENGINEER

8/29/18

P.E. SEAL/SIGNATURE/DATE

FLORIDA BUILDING CODE (HIGH VELOCITY HURRICANE ZONE)

TILTECO INC.
TILLIT TESTING & ENGINEERING COMPANY
6355 N.W. 36th. St., Ste. 305, VIRGINIA GARDENS, Fl. 33166
Phone : (305)871-1530 , Fax : (305)871-1531
EB-0006719
WALTER A. TILLIT Jr. P.E.
FLORIDA Lic. # 44167

OUTSWING SERIES LS 18GA SKIN FLUSH COMMERCIAL DOUBLE & SINGLE STEEL DOOR W/ SERIES "AS" 16GA FRAME

DAYBAR INDUSTRIES LTD.
50 WEST DRIVE, BRAMPTON,
ON CANADA, L6T 2J4
TEL: 905 625-8000 FAX: 905 625-4204

REV. NO	DESCRIPTION	DATE	REV. No	DESCRIPTION	DATE
1			3	-	-
2	-	-	4	-	-

M.L.
DRAWN BY:

11/11/17
DATE:

17-010
DRAWING No.

SHEET 13 OF 14

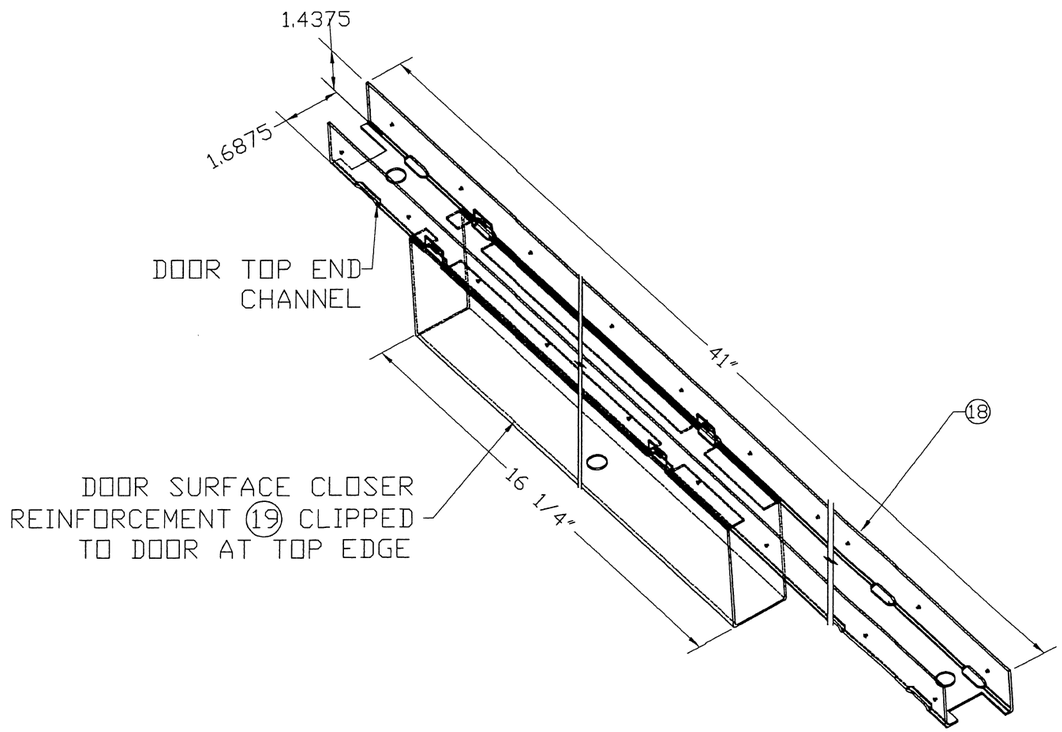

DOOR SURFACE CLOSER REINFORCEMENT 19 AND END CHANNEL 18 ASSEMBLY DETAIL

DETAIL Z

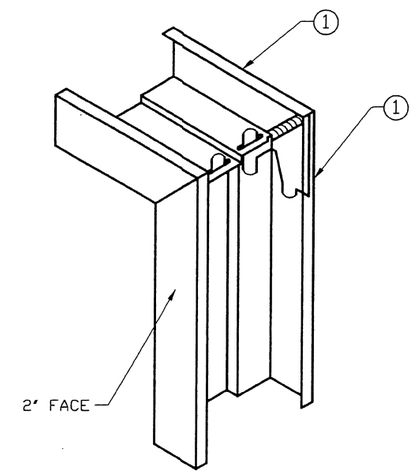

1. DIEMITERED CORNER CONT. WELDED INSIDE FACES & AT RETURNS
2. CAULK COMPLETE INSIDE CORNER WITH GE SILICONE II 17

DETAIL Y

CORNER DETAIL Y

PRODUCT APPROVED
as complying with the Florida Building Code
NOA-No. 17-1227.15
Approval Date 05/31/2018
By
Miami-Dade Product Control

WALTER A. TILLIT JR. LICENSE No. 44167 STATE OF FLORIDA PROFESSIONAL ENGINEER

8/29/18

P.E. SEAL/SIGNATURE/DATE

FLORIDA BUILDING CODE (HIGH VELOCITY HURRICANE ZONE)

TILTECO INC.
TILLIT TESTING & ENGINEERING COMPANY
6355 N.W. 36th. St., Ste. 305, VIRGINIA GARDENS, Fl. 33166
Phone : (305)871-1530 . Fax : (305)871-1531
EB-0006719
WALTER A. TILLIT Jr. P.E.
FLORIDA Lic. # 44167

OUTSWING SERIES LS 18GA SKIN FLUSH COMMERCIAL DOUBLE & SINGLE STEEL DOOR W/ SERIES "AS" 16GA FRAME

DAYBAR INDUSTRIES LTD.
50 WEST DRIVE, BRAMPTON,
ON CANADA, L6T 2J4
TEL: 905 625-8000 FAX: 905 625-4204

REV. NO	DESCRIPTION	DATE	REV. No	DESCRIPTION	DATE
1			3	-	-
2	-	-	4	-	-

M.L.
DRAWN BY:
11/11/17
DATE:
17-010
DRAWING No.
SHEET 14 OF 14