MIAMI-DADE COUNTY
PRODUCT CONTROL SECTION
11805 SW 26 Street, Room 208
Miami, Florida 33175-2474
T (786) 315-2590 F (786) 315-2599
www.miamidade.gov/economy

DEPARTMENT OF REGULATORY AND ECONOMIC RESOURCES (RER)
BOARD AND CODE ADMINISTRATION DIVISION

# NOTICE OF ACCEPTANCE (NOA)

**Middko, LLC**
**6700 N. W. 77 CT. STE 100**
**Miami, Fl. 33166**

**SCOPE:**

This NOA is being issued under the applicable rules and regulations governing the use of construction materials. The documentation submitted has been reviewed and accepted by Miami-Dade County RER -Product Control Section to be used in Miami Dade County and other areas where allowed by the Authority Having Jurisdiction (AHJ).

This NOA shall not be valid after the expiration date stated below. The Miami-Dade County Product Control Section (In Miami Dade County) and/or the AHJ (in areas other than Miami Dade County) reserve the right to have this product or material tested for quality assurance purposes. If this product or material fails to perform in the accepted manner, the manufacturer will incur the expense of such testing and the AHJ may immediately revoke, modify, or suspend the use of such product or material within their jurisdiction. RER reserves the right to revoke this acceptance, if it is determined by Miami-Dade County Product Control Section that this product or material fails to meet the requirements of the applicable building code.

This product is approved as described herein, and has been designed to comply with the Florida Building Code, including the High Velocity Hurricane Zone.

**DESCRIPTION: Series "Inter 120" Aluminum Sliding Glass Door-S.M.I.**

**APPROVAL DOCUMENT:** Drawing No. **17-272** (Former **10-044**), titled "Series INTER 120 Aluminum Sliding glass Door", sheets 1 thru 16, 16A, 17 through 31 of 31, prepared by Tilteco Inc, dated 06/05/18, signed and sealed by Walter A. Tillit Jr., P.E., bearing the Miami-Dade County Product Control Revision stamp with the Notice of Acceptance number and expiration date by the Miami-Dade County Product Control Section.

**MISSILE IMPACT RATING: Small Missile Impact Resistant**

**Limitations:**

1. See Design Pressures (DP) rating Vs sizes, tracks, configurations and anchor layout in sheets **6** through **12**. See anchor spacing schedule in sheet **30**.
2. 1X buck when used as spacer, to be properly secured to transfer imposed load.

**LABELING:** Each unit shall bear a permanent label with the manufacturer's name or logo, Yucatan, Mexico and series and following statement: "Miami-Dade County Product Control Approved", noted herein.

**RENEWAL** of this NOA shall be considered after a renewal application has been filed and there has been no change in the applicable building code negatively affecting the performance of this product.

**TERMINATION** of this NOA will occur after the expiration date or if there has been a revision or change in the materials, use, and/or manufacture of the product or process. Misuse of this NOA as an endorsement of any product, for sales, advertising or any other purposes shall automatically terminate this NOA. Failure to comply with any section of this NOA shall be cause for termination and removal of NOA.

**ADVERTISEMENT:** The NOA number preceded by the words Miami-Dade County, Florida, and followed by the expiration date may be displayed in advertising literature. If any portion of the NOA is displayed, then it shall be done in its entirety.

**INSPECTION:** A copy of this entire NOA shall be provided to the user by the manufacturer or its distributors and shall be available for inspection at the job site at the request of the Building Official.

This NOA **revises** NOA# **11-0823.06** (Interalum S.A. de C.V.) and consists of this page 1 and evidence pages E-1 & E-2, as well as approval document mentioned above.

The submitted documentation was reviewed by **Ishaq I. Chanda, P.E.**

MIAMI-DADE COUNTY APPROVED

11/15/18

## NOTICE OF ACCEPTANCE: EVIDENCE SUBMITTED

### 1. Evidence submitted under previous approvals

### A. DRAWINGS

1. Manufacturer's parts and sections drawings.
2. Drawing No. **10-044**, titled "Series INTER 120 Aluminum Sliding glass Door", sheets 1 thru 16, 16A, 17 through 30 of 30, prepared by Tilteco Inc, dated 10/07/11, signed and sealed by Walter A. Tillit Jr., P.E.

### B. TESTS (submitted under file #**11-0823.06**)

1. Test reports on 1) Air Infiltration Test, per FBC, TAS 202-94
   2) Uniform Static Air Pressure Test, Loading per FBC, TAS 202-94
   3) Water Resistant Test, per FBC, TAS 202-94
   4) Large Missile Impact Test per FBC, TAS 201-94
   5) Cyclic Wind Pressure Loading per FBC, TAS 203-94
   6) Forced Entry Test, per FBC 2411.3.2.1 (b) and TAS 202-94

along with marked-up drawings and installation diagram of an aluminum sliding glass door, prepared by American Testing Lab of South Florida, Test Report No. **ATLSF-1102.01.09**, dated 05/18/10, signed and sealed by Edmundo Largaespada, P. E.
(Note: This test reports have addendum letters dated 10/07/2011, issued by American Testing Lab of South Florida, reviewed, signed & sealed by Julio E. Gonzales, P.E.)

### C. CALCULATIONS

1. Anchor verification calculations and structural analysis dated 05/06/10, complying with FBC 2007, prepared, signed and sealed by Walter A. Tillit Jr., P.E.
2. Glazing complies w/ ASTME-1300-02 & -04.

### D. QUALITY ASSURANCE

1. Miami Dade Department of Regulatory and Economic Resources (RER).

### E. MATERIAL CERTIFICATIONS

1. Notice of Acceptance No. **07-1116.04** issued to E.I. DuPont DeNemours & Co., Inc. for their "**DuPont Sentry Glass ® Plus**", expiring on 01/14/12.

### F. STATEMENTS

1. Statement letter of compliance to FBC-2007 and "No financial interest, both dated 08-10-2011, signed by Walter A. Tillit Jr., P.E.
2. Statement of lab compliance, as part of above test report.
3. Distributor agreement dated 06/02/2011 between Interalum, Mexico and All Windows and Cabinet Corp., Signed by Miguel M. Medina and Raul Alba, respectively.

### G. OTHER

1. None.

Ishaq I. Chanda

**Ishaq I. Chanda, P.E.**
**Product Control Examiner**
**NOA No. 18-0117.03**
**Expiration Date: November 03, 2023**
**Approval Date: November 22, 2018**

## NOTICE OF ACCEPTANCE: EVIDENCE SUBMITTED

**2. New Evidence submitted**

**A. DRAWINGS**

1. Drawing No. **17-272** (Former **10-044**), titled "Series INTER 120 Aluminum Sliding glass Door", sheets 1 thru 16, 16A, 17 through 31 of 31, prepared by Tilteco Inc, dated 06/05/18, signed and sealed by Walter A. Tillit Jr., P.E.
   Note: This revision consist of name change with sales of assets.

**B. TESTS**

1. None

**C. CALCULATIONS**

1. Anchor verification calculations and structural analysis dated 12/12/17, complying with FBC 2017 (**6th** Edition), prepared, signed and sealed by Walter A. Tillit Jr., P.E.
2. Glazing complies w/ ASTME-1300-02, -04 & -09.

**D. QUALITY ASSURANCE**

1. Miami Dade Department of Regulatory and Economic Resources (RER).

**E. MATERIAL CERTIFICATIONS**

1. Notice of Acceptance No. **17-0808.02** issued to **Kuraray America, Inc.** (Former E.I. DuPont DeNemours & Co., Inc. for the "**Sentry Glass ® (Clear and White) Glass Interlayers**", expiring on 07/04/23.

**F. STATEMENTS**

1. Statement letters of conformance to FBC 2017(**6th** Edition), prepared by Tilteco Inc., dated 12/12/17, signed & sealed by Walter A. Tillit Jr., P. E.
2. Distributor agreement dated 12/19/2017 between Middko, LLC, Miami and AluCorp S.A. de C.V., Mexico, Signed by Alan J. Courey (president) and Miguel M. Medina (President) on behalf of their respective companies.
3. Statement letter dated OCT 19, 2018 issued by Interalum stating that Interalum SA DE CV has sold assets of **NOA #11-0823.06** to AluCorp, SA DE CV, stated to rescind the NOA and that they are not manufacturing product under this NOA and has sold all rights, knowhow and equipment to Alucorp, SA DE CV., signed by Miguel A. Medina, legal representative.
4. Statement letter dated OCT 19, 2018 issued by AluCrp, SA DE CV, stating that they have bought the rights, knowhow and equipment used for NOA # **11-0823.06** and request new NOA to be issued to Alucorp, signed by Miguel M. Medina, legal representative.

**G. OTHER**

1. This NOA **revises NOA # 11-0823.06**, expiring 11/22/23.
2. Florida Division of corporation, listing of Middko, LLC as active status since 03/2006.
3. Distribution agreement declaration copies.

Ishaq I. Chanda

**Ishaq I. Chanda, P.E.**
**Product Control Examiner**
**NOA No. 18-0117.03**
**Expiration Date: November 03, 2023**
**Approval Date: November 22, 2018**

# GENERAL NOTES:

1. SERIES INTER 120, ALUMINUM SLIDING GLASS DOOR SMALL MISSILE IMPACT RESISTANT, SHOWN ON THIS PRODUCT APPROVAL DOCUMENT (P.A.D.) HAS BEEN VERIFIED FOR COMPLIANCE IN ACCORDANCE WITH THE 2017 (6th EDITION) OF THE FLORIDA BUILDING CODE.
   THESE DOORS MAY BE INSTALLED AT HIGH VELOCITY HURRICANE ZONES. (MIAMI-DADE / BROWARD COUNTIES).
   DESIGN WIND LOADS SHALL BE DETERMINED AS PER SECTION 1620 OF THE ABOVE MENTIONED CODE, USING ASCE 7-10 AND SHALL NOT EXCEED THE MAXIMUM (A.S.D.) DESIGN PRESSURE RATINGS INDICATED ON NOTE 2 BELOW.

   IN ORDER TO VERIFY THE ABOVE CONDITION, ULTIMATE DESIGN WIND LOADS DETERMINED PER ASCE 7-10 SHALL BE FIRST REDUCED TO A.S.D. DESIGN WIND LOADS BY MULTIPLYING THEM BY 0.6 IN ORDER TO COMPARE THESE W/ MAX. (A.S.D.) DESIGN PRESSURE RATINGS INDICATED ON NOTE 2 BELOW.

   IN ORDER TO VERIFY THAT ANCHORS ON THIS P.A.D., AS TESTED, WERE NOT OVERSTRESSED, A 33% INCREASE IN ALLOWABLE STRESS FOR WIND LOADS WAS **NOT** USED IN THEIR ANALYSIS. A DURATION FACTOR $C_D$=1.60 WAS USED TO VERIFY FASTENERS IN WOOD. FASTENERS SPACING TO WOOD HAS BEEN DETERMINED IN ACCORDANCE WITH N.D.S. 2015.

   THESE DOOR'S ADEQUACY FOR IMPACT AND WIND RESISTANCE HAS BEEN VERIFIED IN ACCORDANCE WITH SECTION 1626 OF THE ABOVE MENTIONED CODE AS PER PROTOCOLS TAS-201, TAS-202, TAS-203, PER AMERICAN TESTING LAB REPORT # 1016.01.09 AND AS PER SUBMITTED STRUCTURAL CALCULATIONS, PERFORMED AS PER SECTION 1616 OF THE FLORIDA BUILDING CODE.
2. MAXIMUM A.S.D. DESIGN PRESSURE RATINGS FOR THESE DOORS SHALL BE AS SHOWN ON SHEETS 6 THRU 12.
3. THESE SLIDING GLASS DOORS WILL NOT REQUIRE A HURRICANE PROTECTION DEVICE.
4. THESE SLIDING GLASS DOORS IS APPROVED FOR AIR AND WATER INFILTRATION. (12.0 psf).
5. THESE PRODUCT'S SHALL COMPLY WITH SECTION 2406 OF THE FLORIDA BUILDING CODE.
6. ALL ALUMINUM EXTRUSIONS SHALL BE ALUMINUM ASSOCIATION ALLOY AND TEMPER AS INDICATED ON SHEET 5. THE THICKNESS OF ALL EXTRUSIONS SHALL BE AS SHOWN ON SHEETS 2, 3 & 4 OF THIS DRAWING.
7. ALL SCREWS USED FOR ASSEMBLY CONNECTIONS (METAL TO METAL) TO BE STAINLESS STEEL 304 OR 316 AISI SERIES OR CORROSION RESISTANT COATED CARBON STEEL AS PER DIN 50018 AND SECTION 2411.3.3.4 OF THE FLORIDA BUILDING CODE WITH 50 ksi YIELD STRENGTH AND 90 ksi TENSILE STRENGTH.
8. WOOD BUCKS NOT BY ALUCORP S.A. DE C.V. WOOD BUCKS MUST BE SOUTHERN PINE, G=0.55. AND SHALL COMPLY WITH SECTIONS 2411.3.3.3 AND 2326 OF THE FLORIDA BUILDING CODE. MUST SUSTAIN LOADS IMPOSED BY GLAZING SYSTEM AND TRANSFER THEM TO THE BUILDING STRUCTURE.

**9. ANCHOR NOTES:** EMBEDMENT AND EDGE DISTANCE ARE BEYOND ANY FINISH.

(A) TO EXISTING POURED CONCRETE: MIN. EDGE DISTANCE = 1".
 - 1/4"ø ULTRACON W/ 1 3/4" MIN. EMBEDMENT, AS MANUFACTURED BY ELCO CONSTRUCTION PRODUCTS, INC (COMPONENT (49) ), THRU 1" P.T. WOOD BUCK (MIN. f'c = 2700 psi).

(B) TO EXISTING A.S.T.M. C-90 CONCRETE BLOCK WALL. MIN. EDGE DISTANCE = 1".
 - 1/4"ø ULTRACON W/ 1 1/4" MIN. EMBEDMENT, AS MANUFACTURED BY ELCO CONSTRUCTION PRODUCTS, INC (COMPONENT (49) ), THRU 1" P.T. WOOD BUCK (MIN. f'm = 1924 psi).

(C) TO EXISTING 2x P.T. WOOD BUCK. MIN. EDGE DISTANCE = 1". (PER N.D.S.)
 - 1/4"ø ULTRACON W/ 1 1/2" MIN. EMBEDMENT, AS MANUFACTURED BY ELCO CONSTRUCTION PRODUCTS, INC (COMPONENT (49) ).

(D) TO EXISTING MIN. 1/8" THICK ALUMINUM TUBE (6063-T5 ALLOY) MIN. EDGE DISTANCE = 1/2".
 - 1/4"ø-14 TEK SCREW, MIN. 3/4" LONG, AS MANUFACTURED BY ITW BUILDEX, INC. (COMPONENT (57) ), GRADE 5. MIN. EMBEDMENT TO BE (3) PITCH OF THREAD BEYOND THE METAL STRUCTURE.

(E) TO EXISTING MIN. 12 GAGE (0.106") STEEL MEMBER (ASTM A-500, A-653 OR A-36) MIN. EDGE DISTANCE = 1/2".
 - 1/4"ø-14 TEK SCREW, MIN. 3/4" LONG, AS MANUFACTURED BY ITW BUILDEX, INC. COMPONENT (57) ), GRADE 5. MIN. EMBEDMENT TO BE (3) PITCH OF THREAD BEYOND THE METAL STRUCTURE.

10. PROVIDE 1/4" MAX. LOAD BEARING SHIM SPACE (TYP.).
11. REMAINING COMPONENTS FOR THIS SLIDING GLASS DOOR'S SYSTEM SHALL BE AS INDICATED ON BILL OF MATERIALS, SHEET 5 OF THIS DRAWING.
12. PRODUCT MANUFACTURER'S LABEL SHALL BE LOCATED ON A READILY VISIBLE LOCATION AT PRODUCT IN ACCORDANCE WITH SECTION 1709.5 OF THE FLORIDA BUILDING CODE. ONE LABEL SHALL BE PLACED FOR EVERY OPENING.
13. (a) THIS P.A.D. PREPARED BY THIS ENGINEER IS GENERIC AND DOES NOT PROVIDE INFORMATION FOR A SITE SPECIFIC PROJECT; i.e. WHERE THE SITE CONDITIONS DEVIATE FROM THE P.A.D.

    (b) CONTRACTOR TO BE RESPONSIBLE FOR THE SELECTION, PURCHASE AND INSTALLATION INCLUDING LIFE SAFETY OF THIS PRODUCT, BASED ON THIS P.A.D., PROVIDED HE/SHE DOES NOT DEVIATE FROM THE CONDITIONS DETAILED ON THIS DOCUMENT. CONSTRUCTION SAFETY AT SITE IS THE CONTRACTOR'S RESPONSIBILITY.

    (c) THIS P.A.D. WILL BE CONSIDERED INVALID IF ALTERED BY ANY MEANS.

    (d) SITE SPECIFIC PROJECTS SHALL BE PREPARED BY A FLORIDA REGISTERED ENGINEER OR ARCHITECT WHICH WILL BECOME THE ENGINEER OF RECORD (E.O.R.) FOR THE PROJECT AND WHO WILL BE RESPONSIBLE FOR THE PROPER USE OF THE P.A.D. ENGINEER OF RECORD, ACTING AS DELEGATED ENGINEER TO THE P.A.D., SHALL SUBMIT TO THIS LATTER SITE SPECIFIC DRAWINGS FOR REVIEW.

    (e) ORIGINAL P.A.D. SHALL BEAR THE DATE AND ORIGINAL SEAL AND SIGNATURE OF THE PROFESSIONAL ENGINEER OF RECORD THAT PREPARED IT.

PRODUCT REVISED
as complying with the Florida
Building Code
Acceptance No 18-0117.03
Expiration Date NOV 03, 2023
By Ishaq I. Chanda
Miami-Dade Product Control

THIS DRAWING SHALL ONLY BE USED TO OBTAIN PERMITS IN THE STATE OF FLORIDA

WALTER A. TILLIT JR. LICENSE No. 44167 STATE OF FLORIDA PROFESSIONAL ENGINEER

MIAMI-DADE COUNTY | P.E. SEAL/SIGNATURE/DATE

FLORIDA BUILDING CODE (High Velocity Hurricane Zone)

© 2017 TILTECO INC.

TILTECO INC.
TILLIT TESTING & ENGINEERING COMPANY
6355 N.W. 36th. St., Ste. 305, VIRGINIA GARDENS, Fl 33166
Phone : (305)871-1530 . Fax : (305)871-1531
e-mail: tilteco@aol.com
EB-0006719
WALTER A. TILLIT Jr., P.E.
FLORIDA Lic. 44167

**SERIES INTER 120, ALUMINUM SLIDING GLASS DOOR SMALL MISSILE IMPACT RESISTANT**

MANUFACTURER: **ALUCORP S.A. de C.V.**
CALLE 2 TAB CAT 17439 INT C x21 Y 25
COL. CHICHI SUAREZ,
MERIDA, YUCATAN, MEXICO
C.P. 97306

DISTRIBUTOR: **MIDDKO LLC.**
6700 NW 77 CT., SUITE 100
MIAMI, FL. 33166

| REV. NO | DESCRIPTION | DATE | REV. No | DESCRIPTION | DATE |
|---|---|---|---|---|---|
| 1 | OLD 10-044 | 12/11/17 | 3 | - | - |
| 2 | | | 4 | - | - |

M.L. DRAWN BY

12/11/17 DATE

17-272 DRAWING No

SHEET 1 OF 31

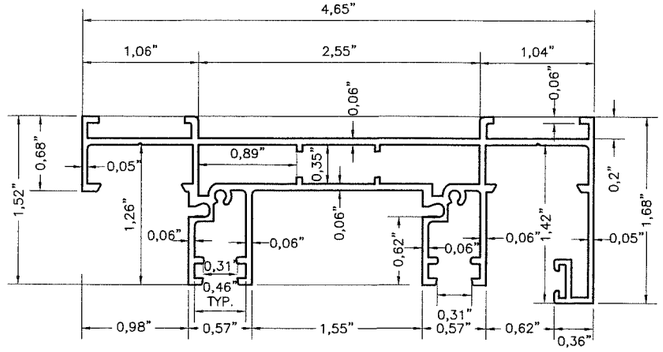


1 FRAME HEAD & JAMB
( 2 TRACKS)
IN-1200

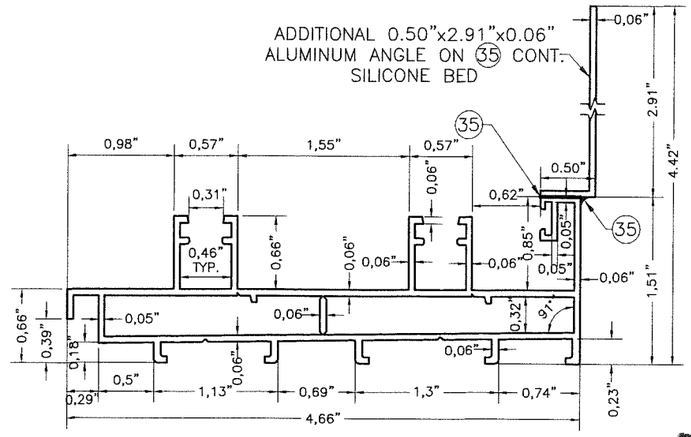


2 FRAME SILL
(2 TRACKS)
IN-1203

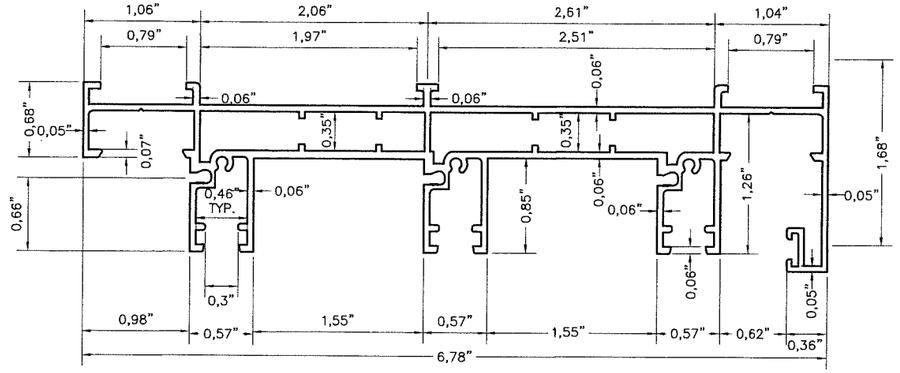


3 FRAME HEAD & JAMB
(3 TRACKS)
IN-1209

PRODUCT REVIEWED
In complying with the Florida
Building Code
Acceptance No. 18-0117.03
Expiration Date 11/31/23
Chief, Bldg. Product Control

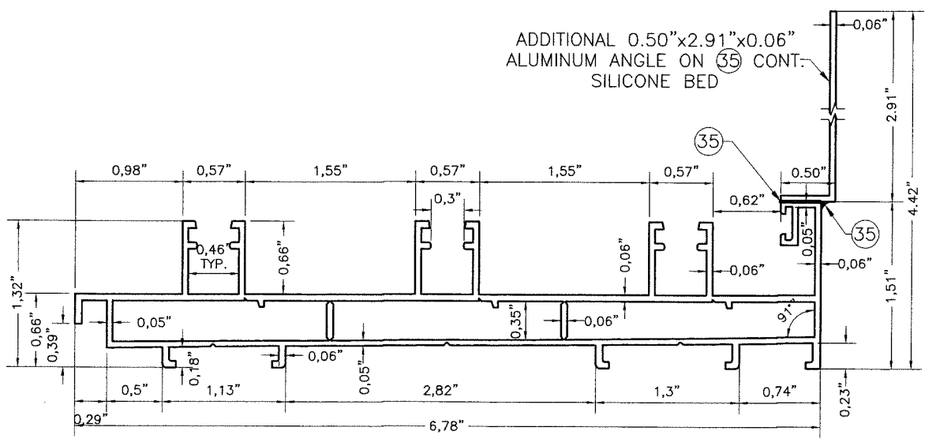


4 FRAME SILL
(3 TRACKS)
IN-1210

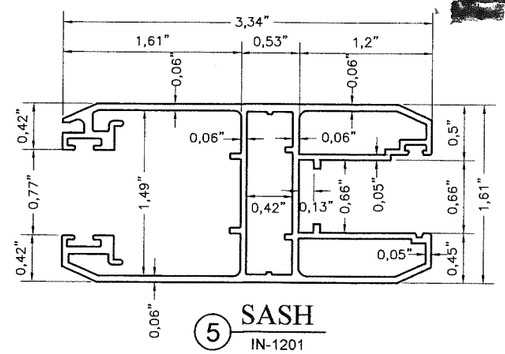


5 SASH
IN-1201

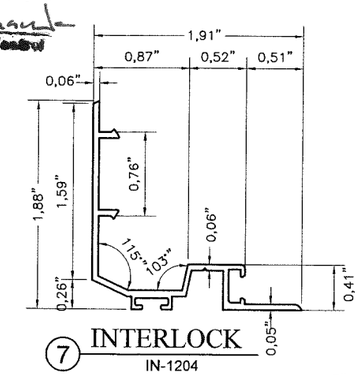


7 INTERLOCK
IN-1204

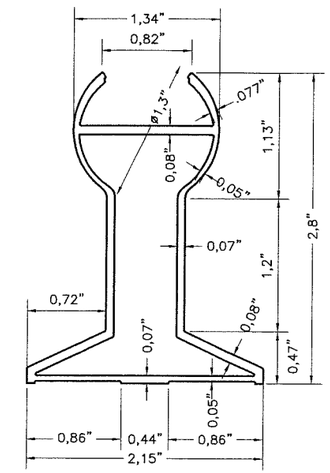


8 REINFORCEMENT
IN-1207

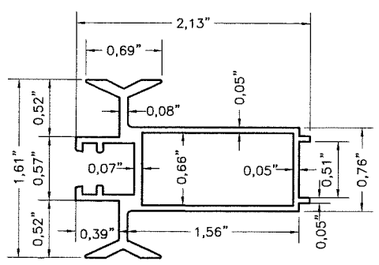


9 ASTRAGAL
IN-1211

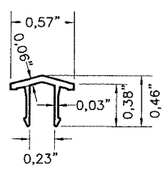


11 COVER TRACK
IN-1205

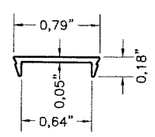


12 COVER FRAME
IN-1206

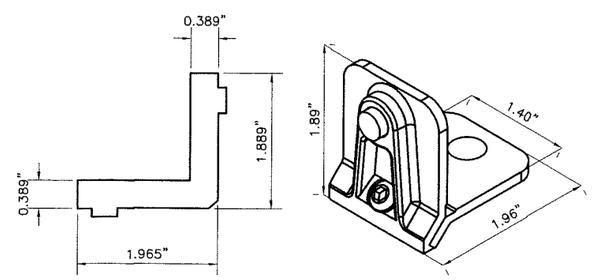


13 FRAME CORNER JOINT
(1.40" DEEP)
A-0358
n.t.s.

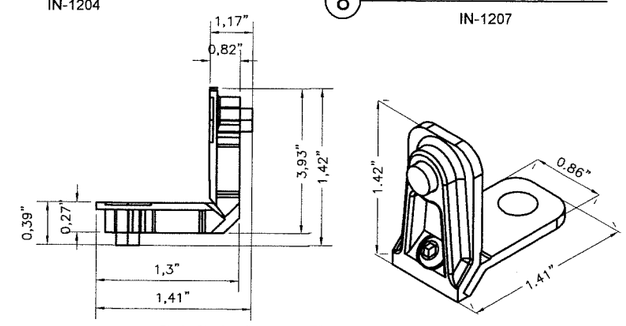


14 SASH CORNER JOINT
(0.86" DEEP)
A-0359
n.t.s.

# COMPONENTS

SCALE 3/4"=1" / 6063-T5 ALUM. ALLOY

FLORIDA BUILDING CODE (High Velocity Hurricane Zone)

WALTER A. TILLIT JR. LICENSE No. 44167 STATE OF FLORIDA PROFESSIONAL ENGINEER

MIAMI-DADE COUNTY — P.E. SEAL/SIGNATURE/DATE

©2017 TILTECO INC.

TILTECO INC.
TILLIT TESTING & ENGINEERING COMPANY
6355 N.W. 36th. St., Ste. 305, VIRGINIA GARDENS, Fl 33166
Phone : (305)871-1530 . Fax : (305)871-1531
e-mail: tilteco@aol.com
EB-0006719
WALTER A. TILLIT Jr., P.E.
FLORIDA Lic. 44167

SERIES INTER 120, ALUMINUM SLIDING GLASS DOOR SMALL MISSILE IMPACT RESISTANT

MANUFACTURER:
ALUCORP S.A. de C.V.
CALLE 2 TAB CAT
17439 INT C x21 Y 25
COL. CHICHI SUAREZ,
MERIDA, YUCATAN, MEXICO
C.P. 97306

DISTRIBUTOR:
MIDDKO LLC.
6700 NW 77 CT., SUITE 100
MIAMI, FL. 33166

| REV. NO | DESCRIPTION | DATE | REV. No | DESCRIPTION | DATE |
|---|---|---|---|---|---|
| 1 | OLD 10-044 | 12/11/17 | 3 | – | – |
| 2 | | | 4 | – | – |

M.L.
DRAWN BY

12/11/17
DATE

17-272
DRAWING No

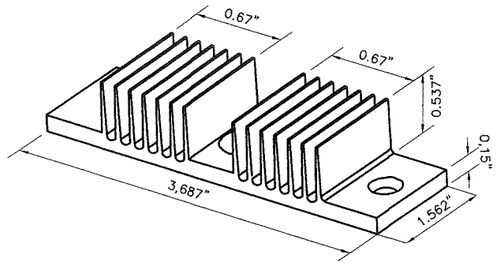


15 INTERLOCK RETAINER CLIP
A-1201

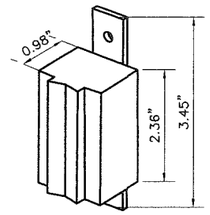


17 FIXED PANEL TRACK BLOCK
A-1203

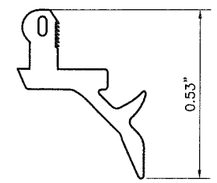


18 EXTERIOR SASH SEAL
A-1204

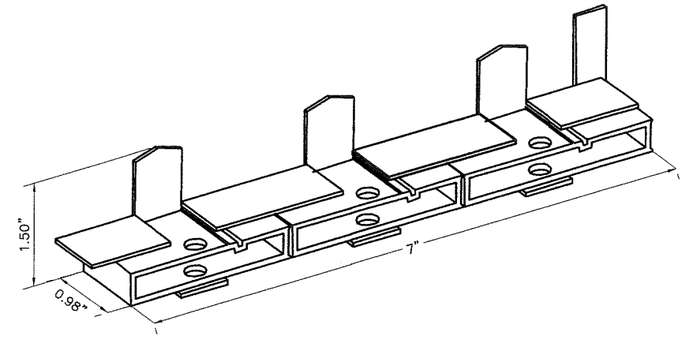


19 CORNER 3 TRACKS FRAME SILL SEAL
A-1205

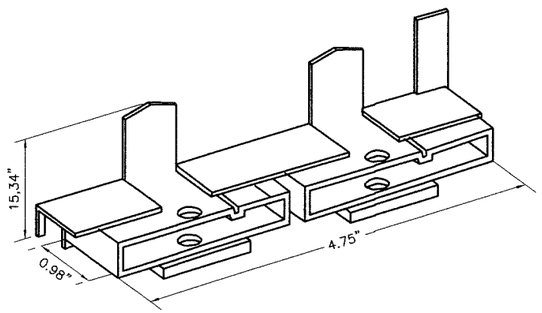


20 CORNER 2 TRACKS FRAME SILL SEAL
A-1206

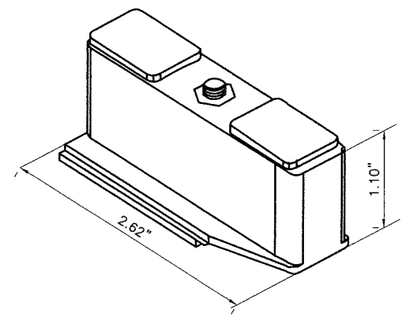


21 FIXED PANEL JAMB BLOCK
A-1207

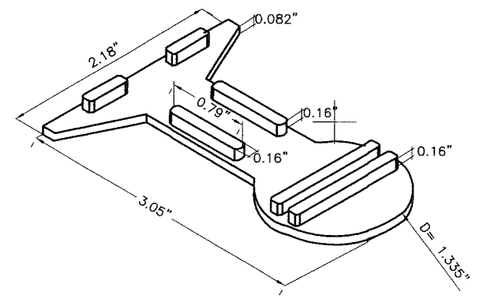


22 REINFORCEMENT COVERING
A-1209

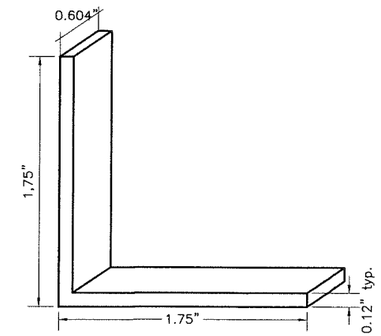


24 ALIGNMENT SASH CORNER
A-1211

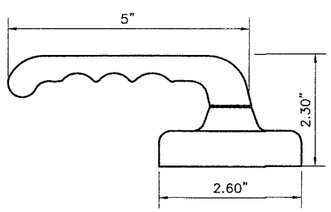


25 MARTELLINA CONFORT (FAST-LOCK)
A-3070

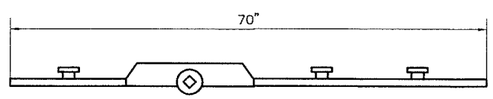


26 FAST-LOCK 3 LOCK POINTS 1800mm
A-6384

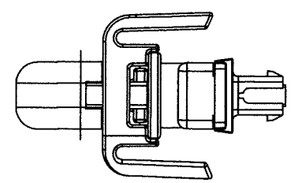

27 ADDED KIT FOR A-6384
A-6394.29

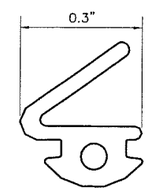


28 INTERLOCK BULB
A-6636

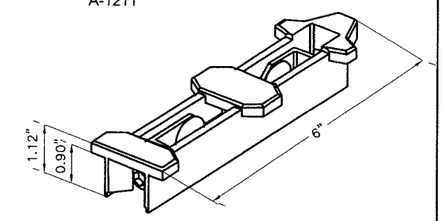


29 180Kg PANEL TANDEM ROLLER
A-6675.2

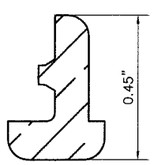


31 INTERIOR GLASS SUPPORT
C2 (sc2 09)

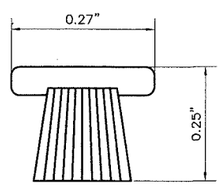


32 FIN SEAL WEATHERSTRIP
AG-1500

# COMPONENTS CONTINUED

N.T.S.

PRODUCT REVIEWED
as complying with the Florida Building Code
Acceptance No. 18-0117.03
Expiration Date 11/23/23
By [signature]
Miami-Dade Product Control

WALTER A. TILLIT JR. LICENSE No. 44167 STATE OF FLORIDA PROFESSIONAL ENGINEER

MIAMI-DADE COUNTY P.E. SEAL/SIGNATURE/DATE

©2017 TILTECO INC.

TILTECO INC.
TILLIT TESTING & ENGINEERING COMPANY
6355 N.W. 36th. St., Ste. 305, VIRGINIA GARDENS, Fl 33166
Phone : (305)871-1530 . Fax : (305)871-1531
e-mail: tilteco@aol.com
EB-0006719
WALTER A. TILLIT Jr., P.E.
FLORIDA Lic. 44167

FLORIDA BUILDING CODE (High Velocity Hurricane Zone)

SERIES INTER 120, ALUMINUM SLIDING GLASS DOOR SMALL MISSILE IMPACT RESISTANT

MANUFACTURER:
ALUCORP S.A. de C.V.
CALLE 2 TAB CAT 17439 INT C x21 Y 25
COL. CHICHI SUAREZ,
MERIDA, YUCATAN, MEXICO
C.P. 97306

DISTRIBUTOR:
MIDDKO LLC.
6700 NW 77 CT., SUITE 100
MIAMI, FL. 33166

| REV. NO | DESCRIPTION | DATE | REV. No | DESCRIPTION | DATE |
|---|---|---|---|---|---|
| 1 | OLD 10-044 | 12/11/17 | 3 | - | - |
| 2 | | | 4 | - | - |

M.L.
DRAWN BY

12/11/17
DATE

17-272
DRAWING No

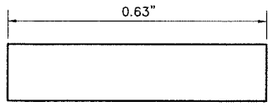


33 DOUBLE SIDE ACRYLIC TAPE
LORD-173

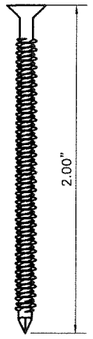


34 JOINT FRAME SCREW: #6 x 2"
A-1212

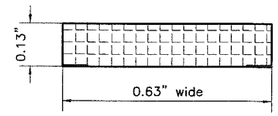


36 SETTING BLOCK (0.850" LONG)
A-1214

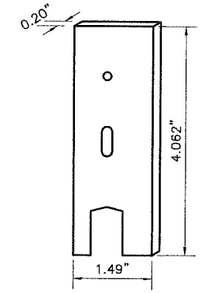


40 INTERLOCK REINFORCEMENT PLATE
A-6831

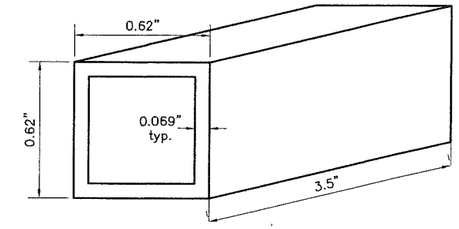


41 FIXED TUBE A-6831
A-1213

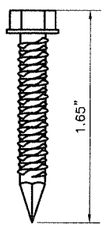


42 SCREW: #10x1-1/2"
A-1220

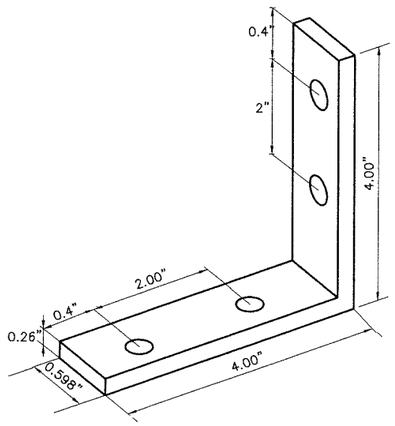


43 REINFORCEMENT ANGLE CORNER PANEL
A-1221

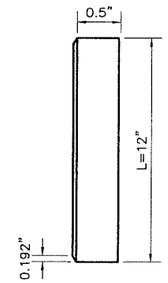


44 REINFORCEMENT PLATE OF GUIDE
IN-1212

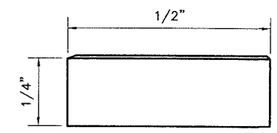


45 VINYL FOAM GLAZING TAPE 1/2"x1/4"
A-1222

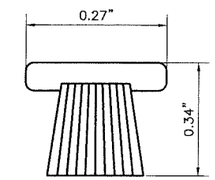


46 FIN SEAL WEATHERSTRIP
AG-1600

47 SCREW: #10-24 x 3/4"
A-1223

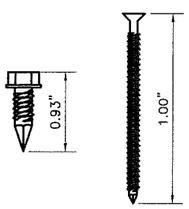


50 SCREW: #10-x $\frac{3}{4}$"
A-1226

51 SCREW: $\frac{3}{16}$" x 1"
A-1227

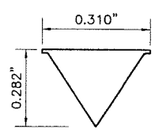


52 DRAIN VALVE
A-1228

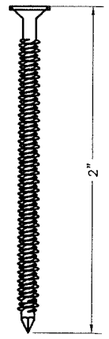


53 SCREW: $\frac{3}{16}$"x 2"
A-1229

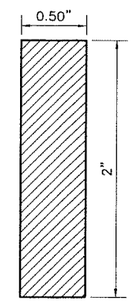


54 STEEL LOCK REINFORCEMENT 2"x 1/2" CONTINUOUS BAR
USED ONLY @ 0XX0 CONFIGURATIONS
A-1230

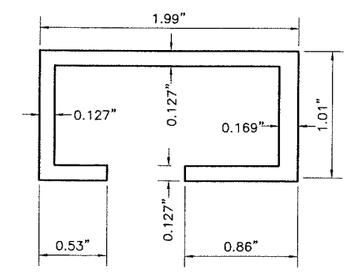


55 THRESHOLD & HEAD @ OPERABLE PANELS (44.5" MAX. LONG)
USED ONLY @ 0XX0 CONFIGURATIONS
A-1231

PRODUCT REVIEWED
as complying with the Florida Building Code
Acceptance No 18-0117.03
Expiration Date 11/3/23
By [signature]
Miami Dade Product Control

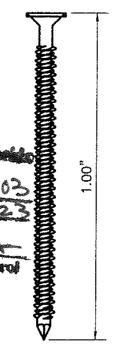


56 SCREW: $\frac{1}{4}$" x 1"
A-1232

# COMPONENTS CONTINUED

N.T.S.

WALTER A. TILLIT JR. LICENSE No. 44167 STATE OF FLORIDA PROFESSIONAL ENGINEER

MIAMI-DADE COUNTY P.E. SEAL/SIGNATURE/DATE

© 2017 TILTECO INC.

TILTECO INC.
TILLIT TESTING & ENGINEERING COMPANY
6355 N.W. 36th. St., Ste. 305, VIRGINIA GARDENS, Fl 33166
Phone : (305)871-1530 . Fax : (305)871-1531
e-mail: tilteco@aol.com
EB-0006719
WALTER A. TILLIT Jr., P.E.
FLORIDA Lic. 44167

FLORIDA BUILDING CODE (High Velocity Hurricane Zone)

SERIES INTER 120, ALUMINUM SLIDING GLASS DOOR SMALL MISSILE IMPACT RESISTANT

MANUFACTURER: ALUCORP S.A. de C.V.
CALLE 2 TAB CAT 17439 INT C x21 Y 25
COL. CHICHI SUAREZ,
MERIDA, YUCATAN, MEXICO
C.P. 97306

DISTRIBUTOR: MIDDKO LLC.
6700 NW 77 CT., SUITE 100
MIAMI, FL. 33166

| REV. NO | DESCRIPTION | DATE | REV. No | DESCRIPTION | DATE |
|---|---|---|---|---|---|
| 1 | OLD 10-044 | 12/11/17 | 3 | – | – |
| 2 | | | 4 | – | – |

M.L.
DRAWN BY

12/11/17
DATE

17-272
DRAWING No

SHEET 4 OF 31

# BILL OF MATERIALS

| ITEM # | CODE | QUANTITY | DESCRIPTION | MATERIAL | MANF/SUPPLIER / REMARKS |
|---|---|---|---|---|---|
| 1 | IN-1200 | ---- | FRAME HEAD & JAMB (2 TRACKS) | 6063-T6 | ALUBIN |
| 2 | IN-1203 | ---- | FRAME SILL (2 TRACKS) | 6063-T5 | ALUBIN |
| 3 | IN-1209 | ---- | FRAME HEAD & JAMB (3 TRACKS) | 6063-T6 | ALUBIN |
| 4 | IN-1210 | ---- | FRAME SILL (3 TRACKS) | 6063-T6 | ALUBIN |
| 5 | IN-1201 | ---- | SASH | 6063-T6 | ALUBIN |
| 7 | IN-1204 | ---- | INTERLOCK | 6063-T5 | ALUBIN |
| 8 | IN-1207 | ---- | REINFORCEMENT | 6063-T5 | ALUBIN |
| 9 | IN-1211 | ---- | ASTRAGAL | 6063-T6 | ALUBIN |
| 11 | IN-1205 | ---- | COVER TRACK | 6063-T5 | ALUBIN |
| 12 | IN-1206 | ---- | COVER FRAME | 6063-T5 | ALUBIN |
| 13 | A-0358 | 4 per Unit | FRAME CORNER JOINT | CAST ALUM. | MASTER |
| 14 | A-0359 | 4 per Sash | SASH CORNER JOINT | CAST ALUM. | MASTER |
| 15 | A-1201 | 1 per ILK | INTERLOCK RETAINER CLIP FASTENED TO SILL OR HEADER W/ (2) #8x3/4" PFH SMS | NYLON | S.T.I. |
| 17 | A-1203 | 2 per F.S. | FIXED SASH TRACK BLOCK | NYLON | S.T.I. |
| 18 | A-1204 | 2 per F.S. | EXTERIOR SASH SEAL | VINYL | S.T.I. |
| 19 | A-1205 | 2 per Unit | CORNER 3 TRACKS FRAME SILL SEAL/SOFT VINYL | VINYL | S.T.I. |
| 20 | A-1206 | 2 per Unit | CORNER 2 TRACKS FRAME SILL SEAL/SOFT VINYL | VINYL | S.T.I. |
| 21 | A-1207 | 2 per F.S. | FIXED SASH JAMB BLOCK | NYLON | S.T.I. |
| 22 | A-1209 | 2 per RCT | REINFORCEMENT COVERING | NYLON | S.T.I. |
| 24 | A-1211 | 4 per Sash | ALIGNMENT SASH CORNER | CAST ALUM. | ---- |
| 25 | A-3070 | 1 per FL | MARTELLINA CONFORT (FAST-LOCK) | ---- | MASTER |
| 26 | A-6384 | As Req'd. | FAST-LOCK 3 LOCK POINTS 1800 mm | ---- | MASTER |
| 27 | A-6394.29 | 1 per FL | ADDED KIT FOR A-6384 | ---- | MASTER |
| 28 | A-6636 | As Req'd. | INTERLOCK BULB | ---- | MASTER |
| 29 | A-6675.2 | 2 per O.S. | 180 KG PANEL TANDEM ROLLER | ---- | MASTER |
| 31 | C2 (sc2 09) | As Req'd. | INTERIOR GLASS SUPPORT | EPDM | BASEL |
| 32 | AG-1500 | As Req'd. | FIN SEAL WEATHERSTRIP | ---- | MASTER |
| 33 | LORD-173 | As Req'd. | DOUBLE SIDE ACRYLIC TAPE @ END OF TOP/BOTTOM | ---- | LORD/BASEL |
| 34 | A-1212 | 4 per Unit | JOINT FRAME SCREW #8 x 2" | STEEL | ---- |
| 35 | A-1213 | As Req'd. | STRUCTURAL SILICONE | SILICONE | DOW CORNING 999-A |
| 36 | A-1214 | 4 PER SASH | SETTING BLOCKS AT EACH END OF BOTTOM GLASS | NYLON | S.T.I. |
| 38 | ---- | ---- | 9/16" (NOMINAL) LAMINATED GLASS W/ (1) 1/4" HEAT STRENGTHENED GLASS + 0.038" INNER LAYER FILM S.G. INTERLAYER PER KURARAY AMERICA INC., W/ (1) 1/4" HEAT STRENGTHENED GLASS. | GLASS | ---- |
| 40 | A-6831 | 2 per Sash | INTERLOCK REINFORCEMENT PLATE | 6063-T5 | ALUBIN |
| 41 | IN-1213 | 2 per Meeting Stile | FIXED TUBE OF A-6831 TYP. TOP/BOTTOM | 6063-T5 | ALUBIN |
| 42 | A-1220 | 4 per Sash | SCREW #10 X 1-1/2 " | STEEL | ---- |
| 43 | A-1221 | 4 per Sash | REINFORCEMENT ANGLE CORNER SASH 4"X4"X0.126" | 6063-T5 | ALUBIN |
| 44 | IN-1212 | 4 per Unit | REINFORCEMENT PLATE OF GUIDE TOP/BOTT. L=12", 1/2" X 3/16" | 6063-T5 | ALUBIN |
| 45 | A-1222 | As Req'd. | VINYL FOAM GLAZING TAPE 1/2" x 1/4"x FULL LENGTH OF SILL | VINYL | ---- |
| 46 | AG-1600 | As Req'd. | FIN SEAL WEATHERSTRIP | ---- | ---- |
| 47 | A-1223 | 16 per Sash | #10-24 X 3/4" TEK SCREW | S.S. STEEL | ITW/BUILDEX, INC |
| 48 | A-1224 | As Req'd. | 1/4" MAX. LOAD BEARING SHIM SPACE | NYLON | ---- |
| 49 | A-1225 | As Req'd. | 1/4"Ø ULTRACON TO POURED CONCRETE, CONCRETE BLOCK OR WOOD MEMBER REQ'D. (SEE ANCHOR SCHEDULE ON SHEET 30 AND NOTE 9/1) | STEEL | ELCO CONSTRUCTION PRODUCTS |
| 50 | A-1226 | 2 per Sash | #10 X 3/4 " TEX SCREW | STEEL | ITW/BUILDEX, INC |
| 51 | A-1227 | 4 per Unit | SCREW 3/16"Ø X 1" | STEEL | ---- |
| 52 | A-1228 | As Req'd. | DRAIN VALVE | NYLON | S.T.I. |
| 53 | A-1229 | 10 per Unit | SCREW 3/16"ØX 2" | STEEL | |
| 54 | A-1230 | As Req'd. | STEEL LOCK REINFORCEMENT:2"X 1/2" CONTINUOUS BAR AT 0XX0, OXX & OXO CONFIGURATIONS ONLY WHEN IS USED W/ COMP. 2 & COMP. 8 @ EXTERIOR AND LEFT SIDE OF OPERABLE DOOR. | STEEL | ---- |
| 55 | A-1231 | As Req'd. | THRESHOLD & HEAD @ OPERABLE SASHES | 6063-T5 | ---- |
| 56 | A-1232 | (12) Req'd. | SCREW 1/4" X 1 " TYP. TOP & BOTTOM | STEEL | ---- |
| 57 | --- | As Req'd. | 1/4"Ø TEK SCREW TO ALUMINUM OR STEEL MEMBER REQ'D. (SEE ANCHOR SCHEDULE ON SHEET 30 AND NOTE 9/1) | STEEL | ITW/BUILDEX, INC |
| 58 | --- | 4 Req'd'. | #6x1/2" P.P.H. S.M.S. | STEEL | |

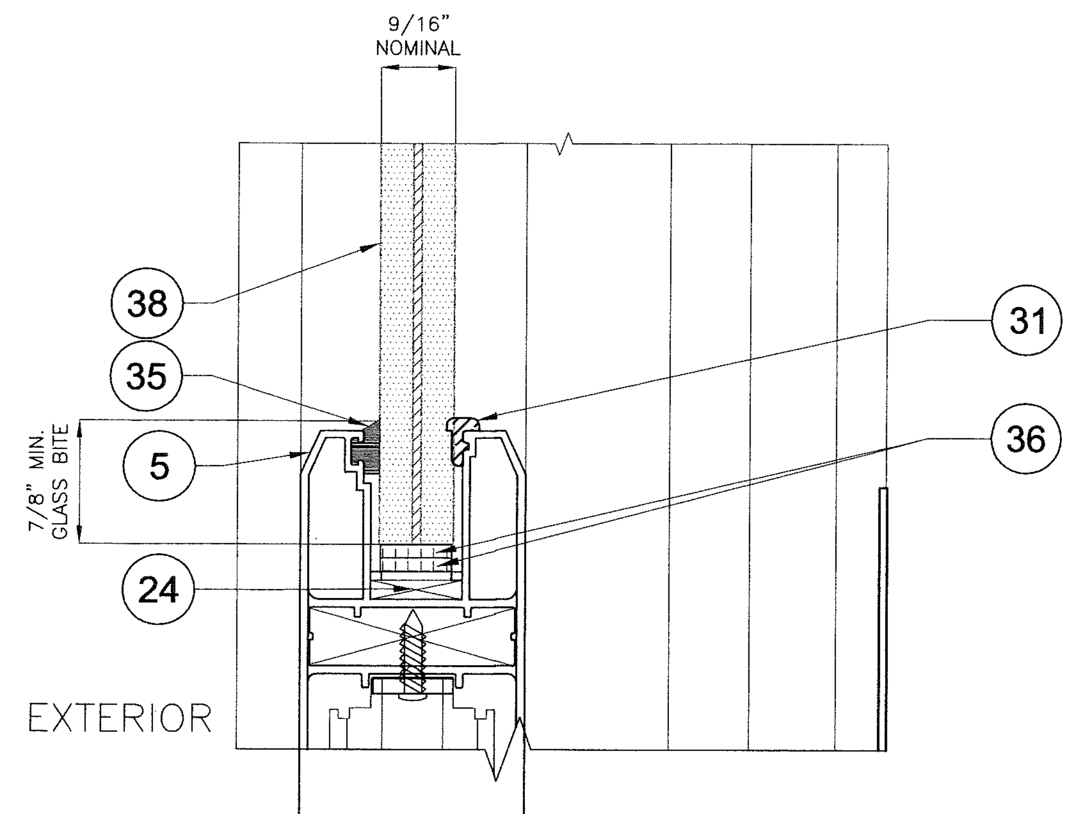


GLAZING DETAIL (SECTION)

SCALE:1/4"=1"

PRODUCT REVISED as complying with the Florida Building Code
Acceptance No 18-0117.03
Expiration Date 11/3/23
By
Miami-Dade Product Control

FLORIDA BUILDING CODE (High Velocity Hurricane Zone)

WALTER A. TILLIT JR. LICENSE No. 44167 STATE OF FLORIDA PROFESSIONAL ENGINEER

MIAMI-DADE COUNTY

P.E. SEAL/SIGNATURE/DATE

© 2017 TILTECO INC.


TILTECO INC.
TILLIT TESTING & ENGINEERING COMPANY
6355 N.W. 36th. St., Ste. 305, VIRGINIA GARDENS, Fl 33166
Phone : (305)871-1530 . Fax : (305)871-1531
e-mail: tilteco@aol.com
EB-0006719
WALTER A. TILLIT Jr., P.E.
FLORIDA Lic. 44167


SERIES INTER 120, ALUMINUM SLIDING GLASS DOOR SMALL MISSILE IMPACT RESISTANT

MANUFACTURER:
ALUCORP S.A. de C.V.
CALLE 2 TAB CAT 17439 INT C x21 Y 25 COL. CHICHI SUAREZ, MERIDA, YUCATAN, MEXICO C.P. 97306

DISTRIBUTOR:
MIDDKO LLC.
6700 NW 77 CT., SUITE 100 MIAMI, FL. 33166

| REV. NO | DESCRIPTION | DATE | REV. No | DESCRIPTION | DATE |
|---|---|---|---|---|---|
| 1 | OLD 10-044 | 12/11/17 | 3 | - | - |
| 2 | M.D.C COMMENTS | 3/22/18 | 4 | - | - |

M.L.
DRAWN BY

12/11/17
DATE

17-272
DRAWING No

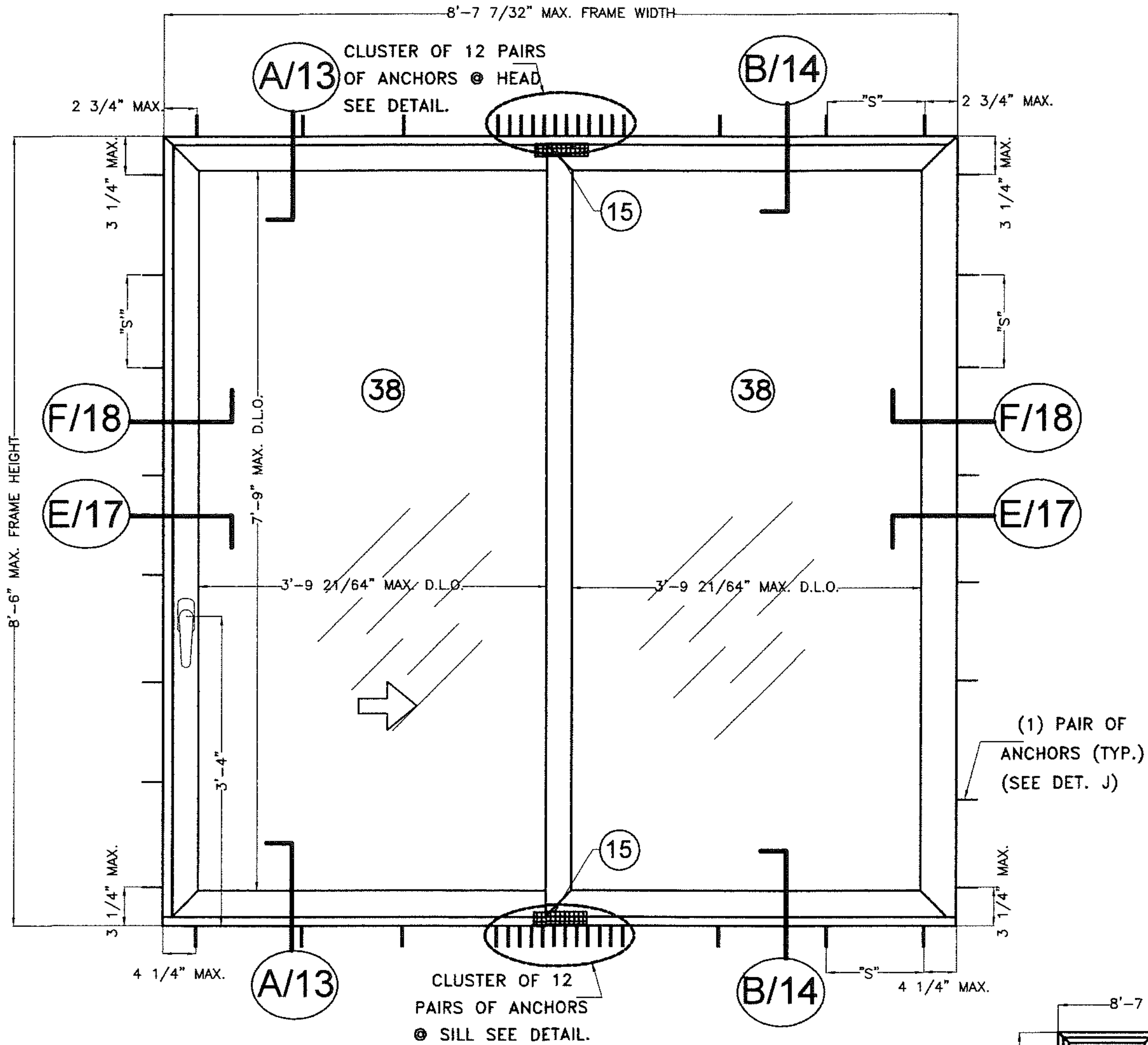


# TYPICAL EXTERIOR ELEVATION
# DOUBLE SASH DOOR (XO) 2 TRACKS

MAXIMUM DESIGN LOAD: +80.0, −80.0 psf

SCALE: 1/2"=1'-0

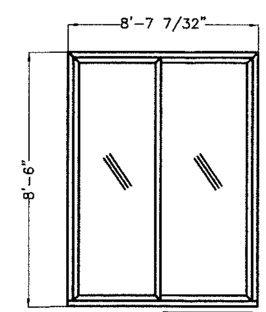


ALSO QUALIFIES OX

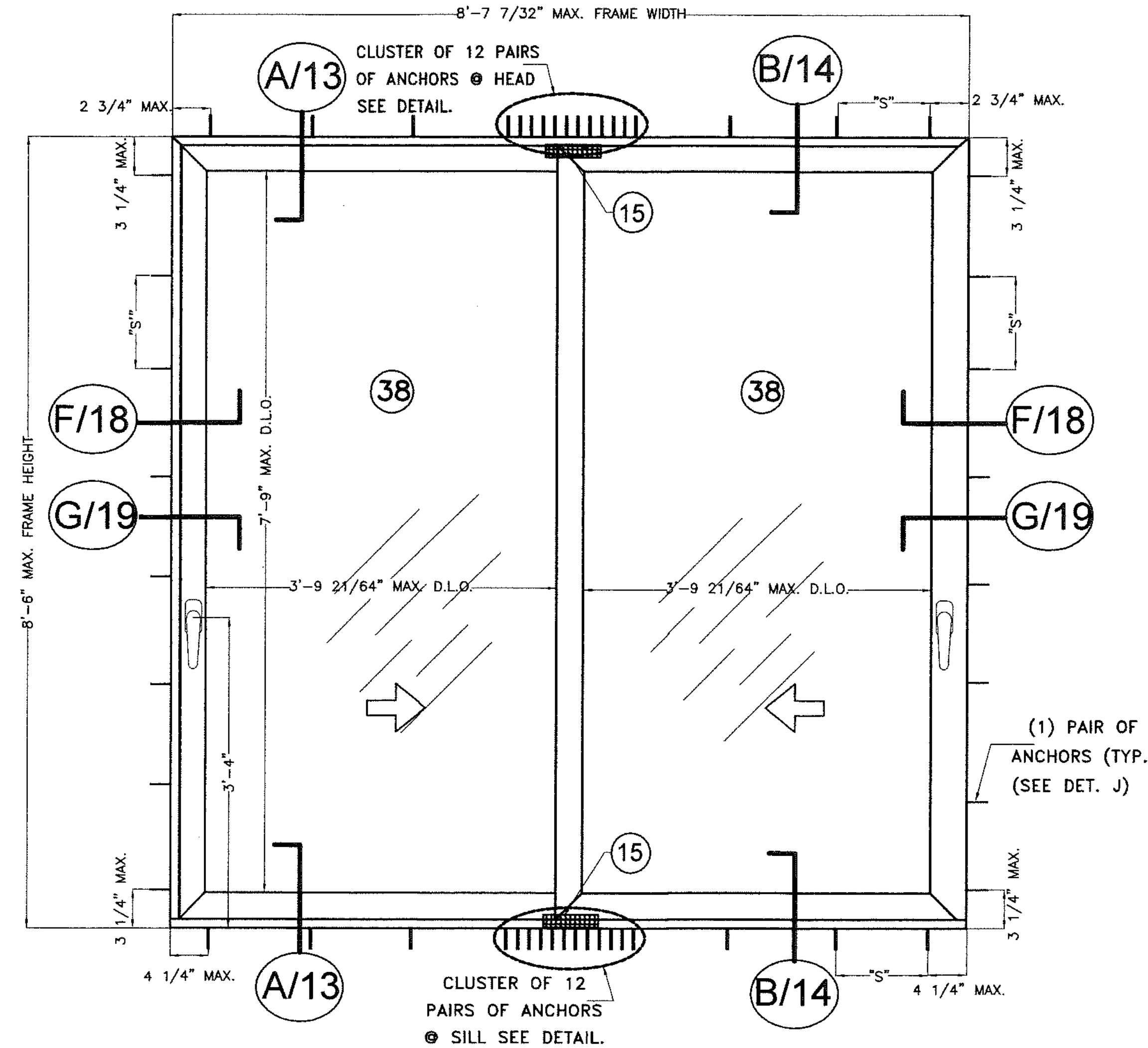


# TYPICAL EXTERIOR ELEVATION
# DOUBLE SASH DOOR (XX) 2 TRACKS

MAXIMUM DESIGN LOAD: +80.0, −80.0 psf

SCALE: 1/2"=1'-0

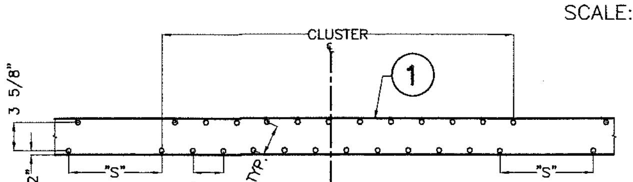


CLUSTER OF 12 PAIRS OF ANCHORS
@ HEAD
(SCHEMATIC PLAN)

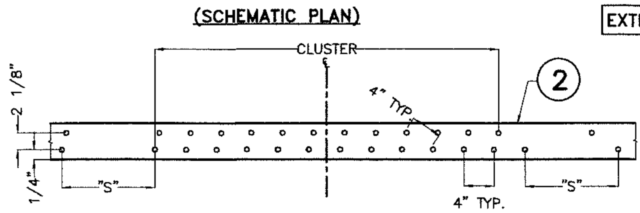


CLUSTER OF 12 PAIRS OF ANCHORS @ SILL
(SCHEMATIC PLAN)

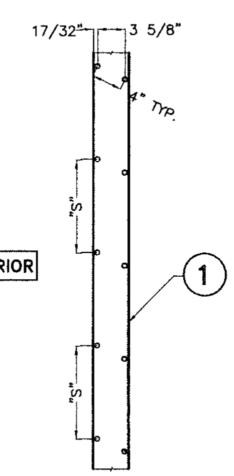


PAIRS OF ANCHORS @ JAMB
(SCHEMATIC ELEVATION)
DETAIL J

"S" = MAX. ANCHOR SPACING (SEE SCHEDULE ON SHEET 30)

PRODUCT REVISED as complying with the Florida Building Code
Acceptance No 18-0117.03
Expiration Date 11/13/23
By [signature]
Miami-Dade Product Control

WALTER A. TILLIT JR. LICENSE No. 44167 STATE OF FLORIDA PROFESSIONAL ENGINEER

FLORIDA BUILDING CODE (High Velocity Hurricane Zone)

MIAMI-DADE COUNTY

P.E. SEAL/SIGNATURE/DATE

©2017 TILTECO INC.

TILTECO INC.
TILLIT TESTING & ENGINEERING COMPANY
6355 N.W. 36th. St., Ste. 305, VIRGINIA GARDENS, Fl 33166
Phone : (305)871-1530 . Fax : (305)871-1531
e-mail: tilteco@aol.com
EB-0006719
WALTER A. TILLIT Jr., P.E.
FLORIDA Lic. 44167

SERIES INTER 120, ALUMINUM SLIDING GLASS DOOR SMALL MISSILE IMPACT RESISTANT

MANUFACTURER:
ALUCORP S.A. de C.V.
CALLE 2 TAB CAT
17439 INT C x21 Y 25
COL. CHICHI SUAREZ,
MERIDA, YUCATAN, MEXICO
C.P. 97306

DISTRIBUTOR:
MIDDKO LLC.
6700 NW 77 CT., SUITE 100
MIAMI, FL. 33166

| REV. NO | DESCRIPTION | DATE | REV. No | DESCRIPTION | DATE |
|---|---|---|---|---|---|
| 1 | OLD 10-044 | 12/11/17 | 3 | - | - |
| 2 | | | 4 | - | - |

M.L.
DRAWN BY

12/11/17
DATE

17-272
DRAWING No

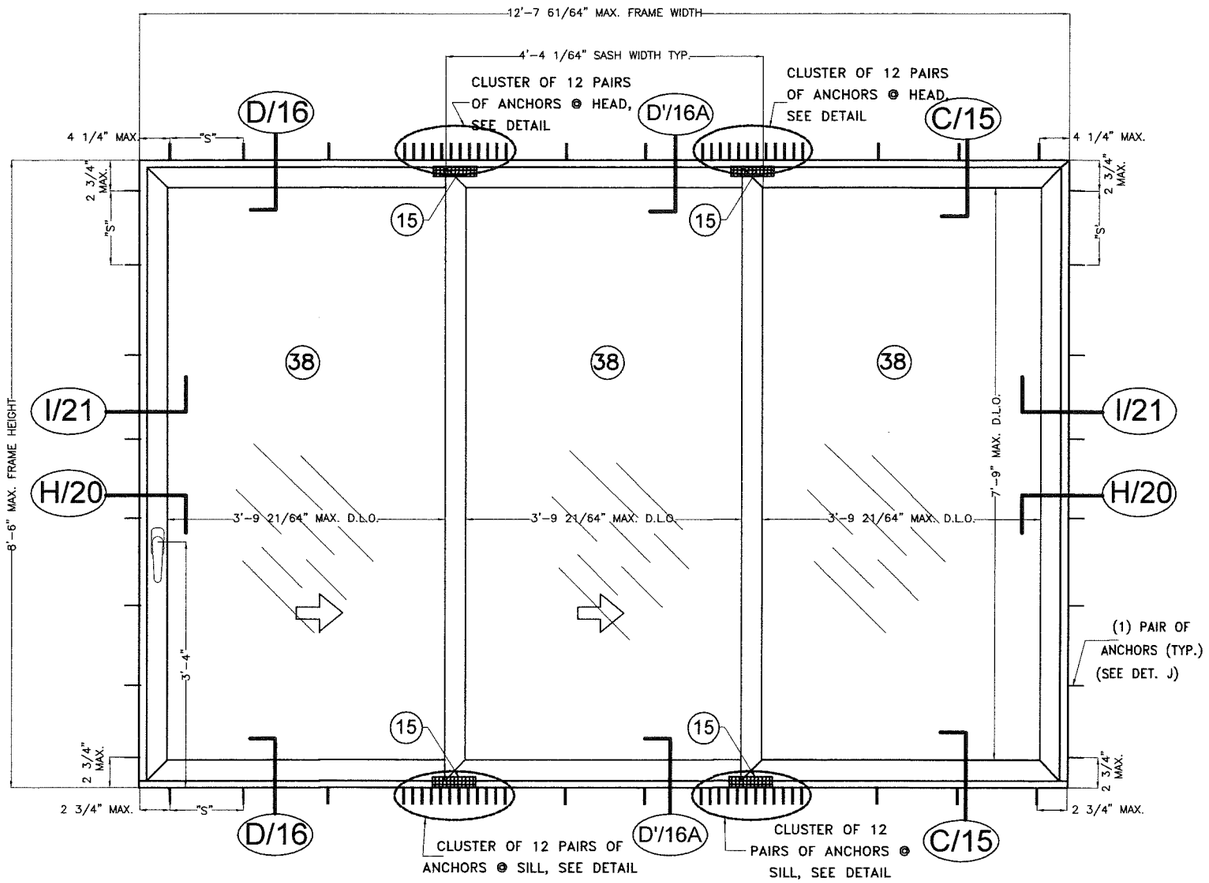


# TYPICAL EXTERIOR ELEVATION
## TRIPLE SASH DOOR (XXO) 3 TRACKS
MAXIMUM DESIGN LOAD: +80.0, -80.0 psf

SCALE: 1/2"=1'-0

"S" = MAX. ANCHOR SPACING (SEE SCHEDULE ON SHEET 30).

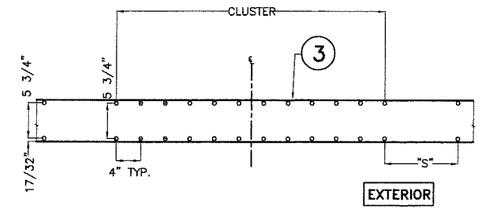


CLUSTER OF 12 PAIRS OF ANCHORS @ HEAD
(SEE SCHEDULE ON SHEET 30)
(SCHEMATIC PLAN)

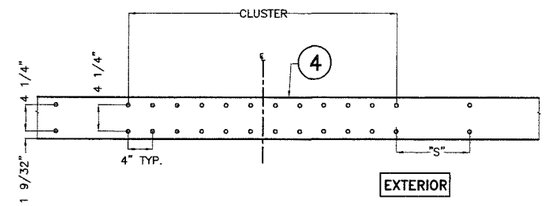


CLUSTER OF 12 PAIRS OF ANCHORS @ SILL
(SEE SCHEDULE ON SHEET 30)
(SCHEMATIC PLAN)

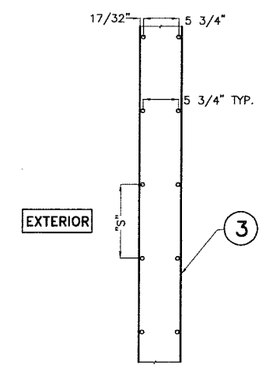


PAIRS OF ANCHORS @ JAMB
(SCHEMATIC ELEVATION)
DETAIL J

PRODUCT REVIEWED
as complying with the Florida Building Code
Acceptance No. 18-0117.03
Expiration Date 11/3/23
Ishaq I. Chanda
Miami-Dade Product Control

WALTER A. TILLIT JR. LICENSE No. 44167 STATE OF FLORIDA PROFESSIONAL ENGINEER

MIAMI-DADE COUNTY P.E. SEAL/SIGNATURE/DATE

FLORIDA BUILDING CODE (High Velocity Hurricane Zone)

©2017 TILTECO INC.

TILTECO INC.
TILLIT TESTING & ENGINEERING COMPANY
6355 N.W. 36th. St., Ste. 305, VIRGINIA GARDENS, Fl 33166
Phone : (305)871-1530 . Fax : (305)871-1531
e-mail: tilteco@aol.com
EB-0006719
WALTER A. TILLIT Jr., P.E.
FLORIDA Lic. 44167

**SERIES INTER 120, ALUMINUM SLIDING GLASS DOOR SMALL MISSILE IMPACT RESISTANT**

MANUFACTURER:
**ALUCORP S.A. de C.V.**
CALLE 2 TAB CAT
17439 INT C x21 Y 25
COL. CHICHI SUAREZ,
MERIDA, YUCATAN, MEXICO
C.P. 97306

DISTRIBUTOR:
**MIDDKO LLC.**
6700 NW 77 CT., SUITE 100
MIAMI, FL. 33166

| REV. NO | DESCRIPTION | DATE | REV. No | DESCRIPTION | DATE |
|---|---|---|---|---|---|
| 1 | OLD 10-044 | 12/11/17 | 3 | – | – |
| 2 | | | 4 | – | – |

| | |
|---|---|
| M.L. | DRAWN BY |
| 12/11/17 | DATE |
| 17-272 | DRAWING No |
| SHEET 7 OF 31 | |

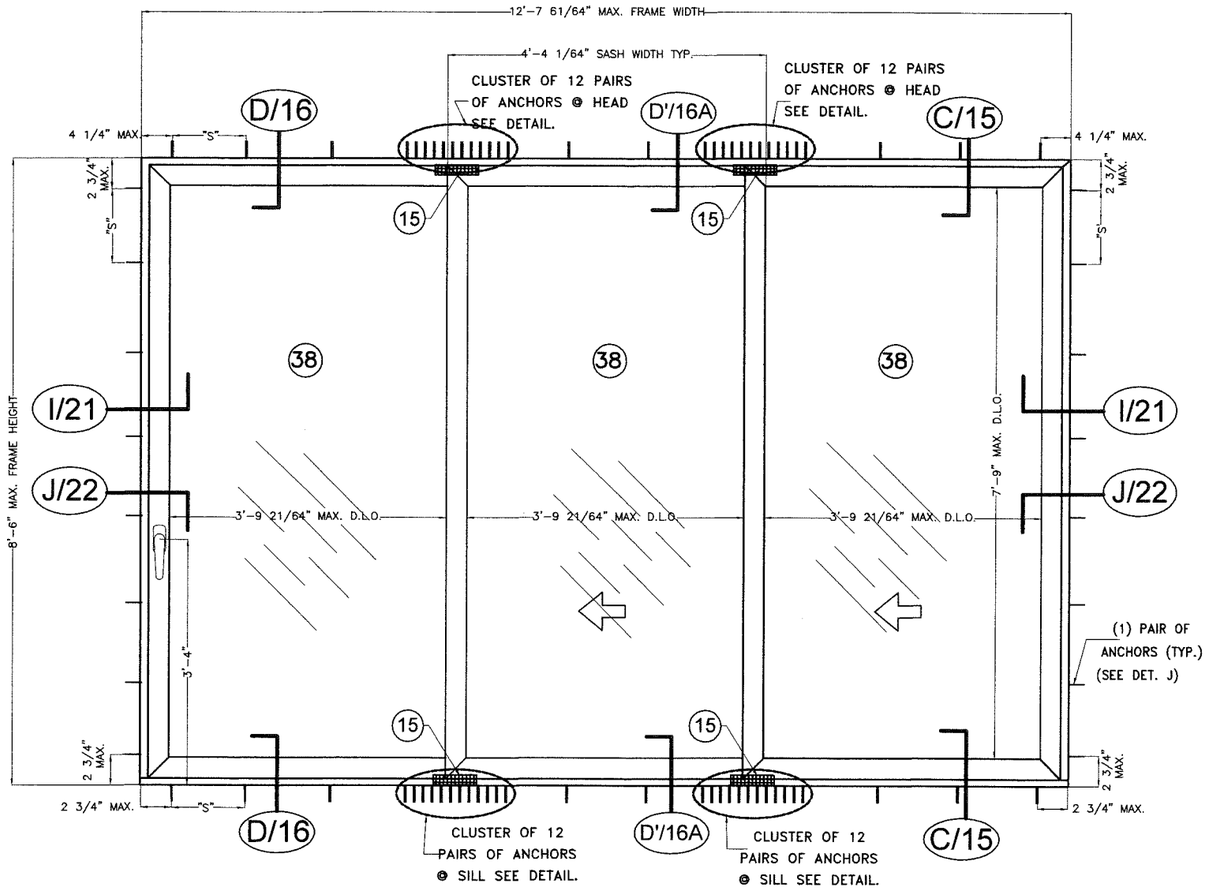


# TYPICAL EXTERIOR ELEVATION
# TRIPLE SASH DOOR (0XX) 3 TRACKS

MAXIMUM DESIGN LOAD: +80.0, -80.0 psf

SCALE: 1/2"=1'-0

"S" = MAX. ANCHOR SPACING (SEE SCHEDULE ON SHEET 30).

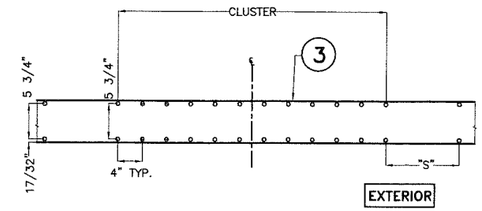


CLUSTER OF 12 PAIRS OF ANCHORS @ HEAD
(SEE SCHEDULE ON SHEET 30)
(SCHEMATIC PLAN)

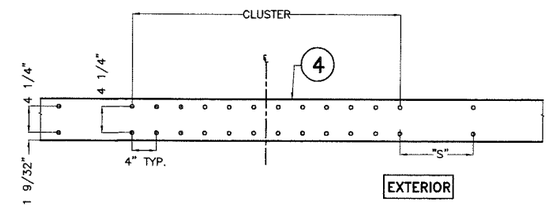


CLUSTER OF 12 PAIRS OF ANCHORS @ SILL
(SEE SCHEDULE ON SHEET 30)
(SCHEMATIC PLAN)

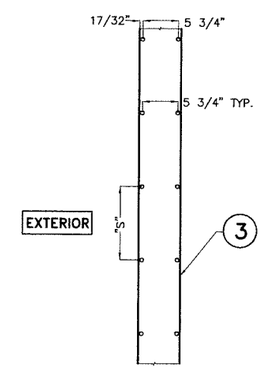


PAIRS OF ANCHORS @ JAMB
(SCHEMATIC ELEVATION)
DETAIL J

PRODUCT REVISED
in complying with the Florida Building Code
Acceptance No. 18-0117.03
Expiration Date 11/3/23
Miami-Dade Product Control

FLORIDA BUILDING CODE (High Velocity Hurricane Zone)

WALTER A. TILLIT JR. LICENSE No. 44167 STATE OF FLORIDA PROFESSIONAL ENGINEER

MIAMI-DADE COUNTY — P.E. SEAL/SIGNATURE/DATE

©2017 TILTECO INC.

TILTECO INC.
TILLIT TESTING & ENGINEERING COMPANY
6355 N.W. 36th. St., Ste. 305, VIRGINIA GARDENS, Fl 33166
Phone : (305)871-1530 . Fax : (305)871-1531
e-mail: tilteco@aol.com
EB-0006719
WALTER A. TILLIT Jr., P.E.
FLORIDA Lic. 44167

SERIES INTER 120, ALUMINUM SLIDING GLASS DOOR SMALL MISSILE IMPACT RESISTANT

MANUFACTURER: ALUCORP S.A. de C.V.
CALLE 2 TAB CAT 17439 INT C x21 Y 25
COL. CHICHI SUAREZ,
MERIDA, YUCATAN, MEXICO
C.P. 97306

DISTRIBUTOR: MIDDKO LLC.
6700 NW 77 CT., SUITE 100
MIAMI, FL. 33166

| REV. NO | DESCRIPTION | DATE | REV. No | DESCRIPTION | DATE |
|---|---|---|---|---|---|
| 1 | OLD 10-044 | 12/11/17 | 3 | - | - |
| 2 | | | 4 | - | - |

| | |
|---|---|
| M.L. | DRAWN BY |
| 12/11/17 | DATE |
| 17-272 | DRAWING No |
| SHEET 8 OF 31 | |

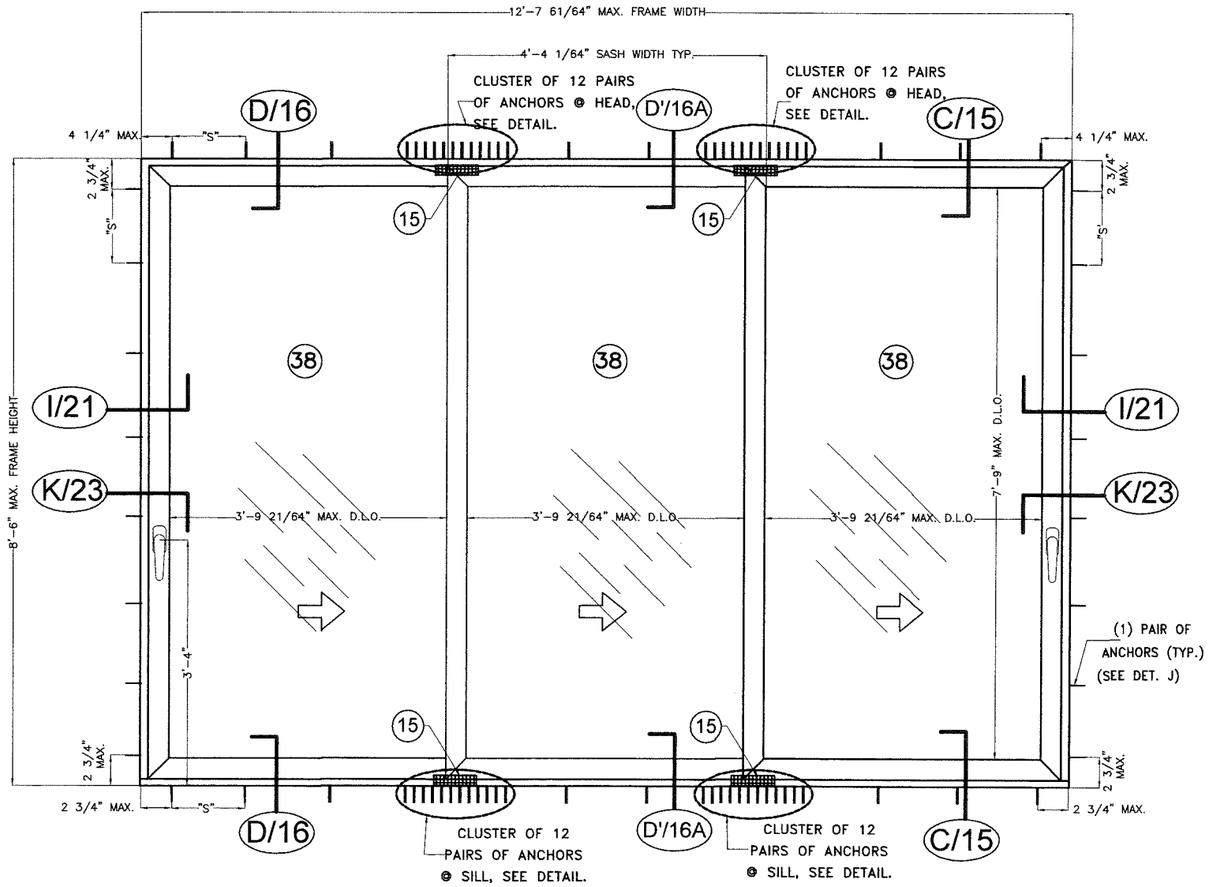


# TYPICAL EXTERIOR ELEVATION
# TRIPLE SASH DOOR (XXX) 3 TRACKS

MAXIMUM DESIGN LOAD: +80.0, -80.0 psf

SCALE: 1/2"=1'-0

"S" = MAX. ANCHOR SPACING (SEE SCHEDULE ON SHEET 30).

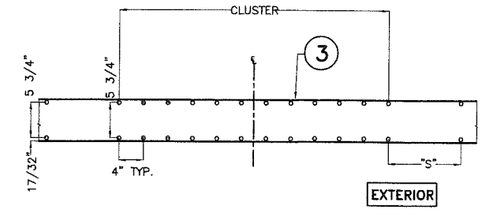


CLUSTER OF 12 PAIRS OF ANCHORS @ HEAD
(SEE SCHEDULE ON SHEET 30)
(SCHEMATIC PLAN)

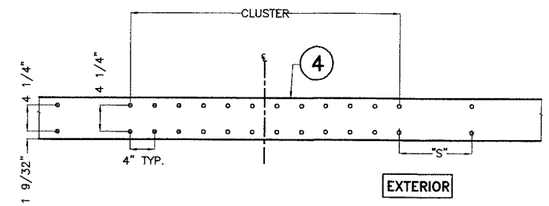


CLUSTER OF 12 PAIRS OF ANCHORS @ SILL
(SEE SCHEDULE ON SHEET 30)
(SCHEMATIC PLAN)

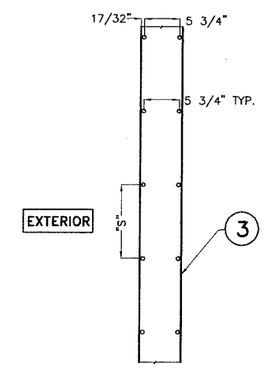


PAIRS OF ANCHORS @ JAMB
(SCHEMATIC ELEVATION)
DETAIL J

PRODUCT REVIEWED as complying with the Florida Building Code
Acceptance No. 18-0117.03
Expiration Date 11/13/23
By [signature]
Miami-Dade Product Control

WALTER A. TILLIT JR. LICENSE No. 44167 STATE OF FLORIDA PROFESSIONAL ENGINEER

MIAMI-DADE COUNTY — P.E. SEAL/SIGNATURE/DATE

©2017 TILTECO INC.

TILTECO INC.
TILLIT TESTING & ENGINEERING COMPANY
6355 N.W. 36th. St., Ste. 305, VIRGINIA GARDENS, Fl 33166
Phone : (305)871-1530 . Fax : (305)871-1531
e-mail: tilteco@aol.com
EB-0006719
WALTER A. TILLIT Jr., P.E.
FLORIDA Lic. 44167

FLORIDA BUILDING CODE (High Velocity Hurricane Zone)

SERIES INTER 120, ALUMINUM SLIDING GLASS DOOR SMALL MISSILE IMPACT RESISTANT

MANUFACTURER: ALUCORP S.A. de C.V.
CALLE 2 TAB CAT 17439 INT C X21 Y 25
COL. CHICHI SUAREZ, MERIDA, YUCATAN, MEXICO
C.P. 97306

DISTRIBUTOR: MIDDKO LLC.
6700 NW 77 CT., SUITE 100
MIAMI, FL. 33166

| REV. NO | DESCRIPTION | DATE | REV. No | DESCRIPTION | DATE |
|---|---|---|---|---|---|
| 1 | OLD 10-044 | 12/11/17 | 3 | - | - |
| 2 | | | 4 | - | - |

M.L. DRAWN BY

12/11/17 DATE

17-272 DRAWING No

SHEET 9 OF 31

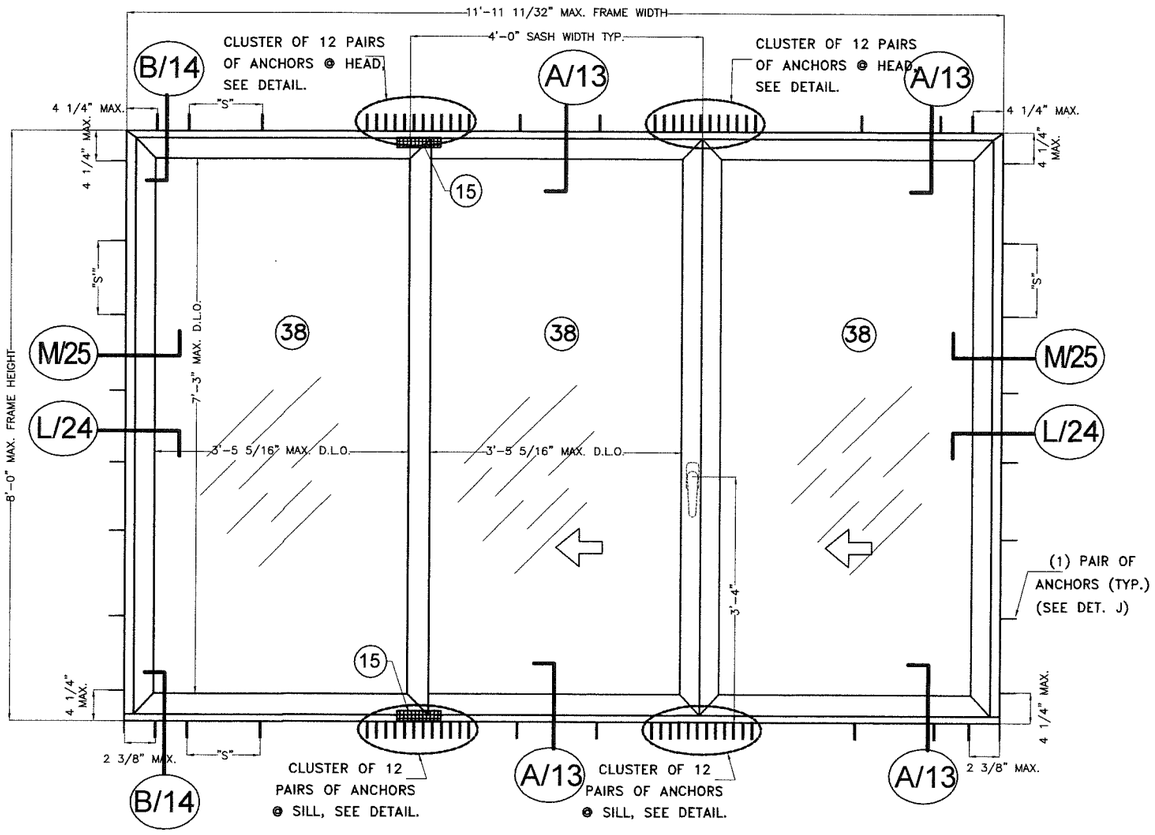


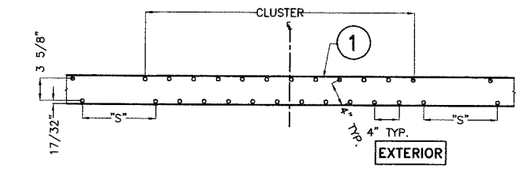


CLUSTER OF 12 PAIRS OF ANCHORS @ HEAD (SCHEMATIC PLAN)

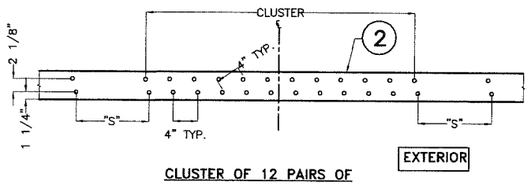


CLUSTER OF 12 PAIRS OF ANCHORS @ SILL (SCHEMATIC PLAN)

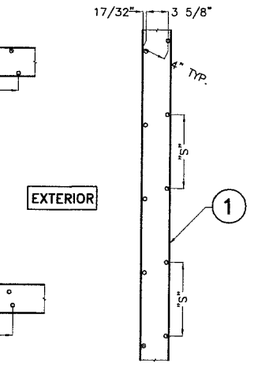


PAIRS OF ANCHORS @ JAMB (SCHEMATIC ELEVATION) DETAIL J

# TYPICAL EXTERIOR ELEVATION
# TRIPLE SASH DOOR (0XX) 2 TRACKS

MAXIMUM DESIGN LOAD: +80.0, -80.0 psf

SCALE: 1/2"=1'-0

**"S" = MAX. ANCHOR SPACING (SEE SCHEDULE ON SHEET 30).**

PRODUCT REVIEWED
as complying with the Florida Building Code
Acceptance No. 18-0117.03
Expiration Date 11/3/23
Miami-Dade Product Control

FLORIDA BUILDING CODE (High Velocity Hurricane Zone)

WALTER A. TILLIT JR. LICENSE No. 44167 STATE OF FLORIDA PROFESSIONAL ENGINEER

MIAMI-DADE COUNTY — P.E. SEAL/SIGNATURE/DATE

©2017 TILTECO INC.

TILTECO INC.
TILLIT TESTING & ENGINEERING COMPANY
6355 N.W. 36th. St., Ste. 305, VIRGINIA GARDENS, Fl 33166
Phone : (305)871-1530 . Fax : (305)871-1531
e-mail: tilteco@aol.com
EB-0006719
WALTER A. TILLIT Jr., P.E.
FLORIDA Lic. 44167

**SERIES INTER 120, ALUMINUM SLIDING GLASS DOOR SMALL MISSILE IMPACT RESISTANT**

MANUFACTURER:
**ALUCORP S.A. de C.V.**
CALLE 2 TAB CAT
17439 INT C X21 Y 25
COL. CHICHI SUAREZ,
MERIDA, YUCATAN, MEXICO
C.P. 97306

DISTRIBUTOR:
**MIDDKO LLC.**
6700 NW 77 CT., SUITE 100
MIAMI, FL. 33166

| REV. NO | DESCRIPTION | DATE | REV. No | DESCRIPTION | DATE |
|---|---|---|---|---|---|
| 1 | OLD 10-044 | 12/11/17 | 3 | - | - |
| 2 | | | 4 | - | - |

M.L.
DRAWN BY

12/11/17
DATE

17-272
DRAWING No

SHEET 10 OF 31

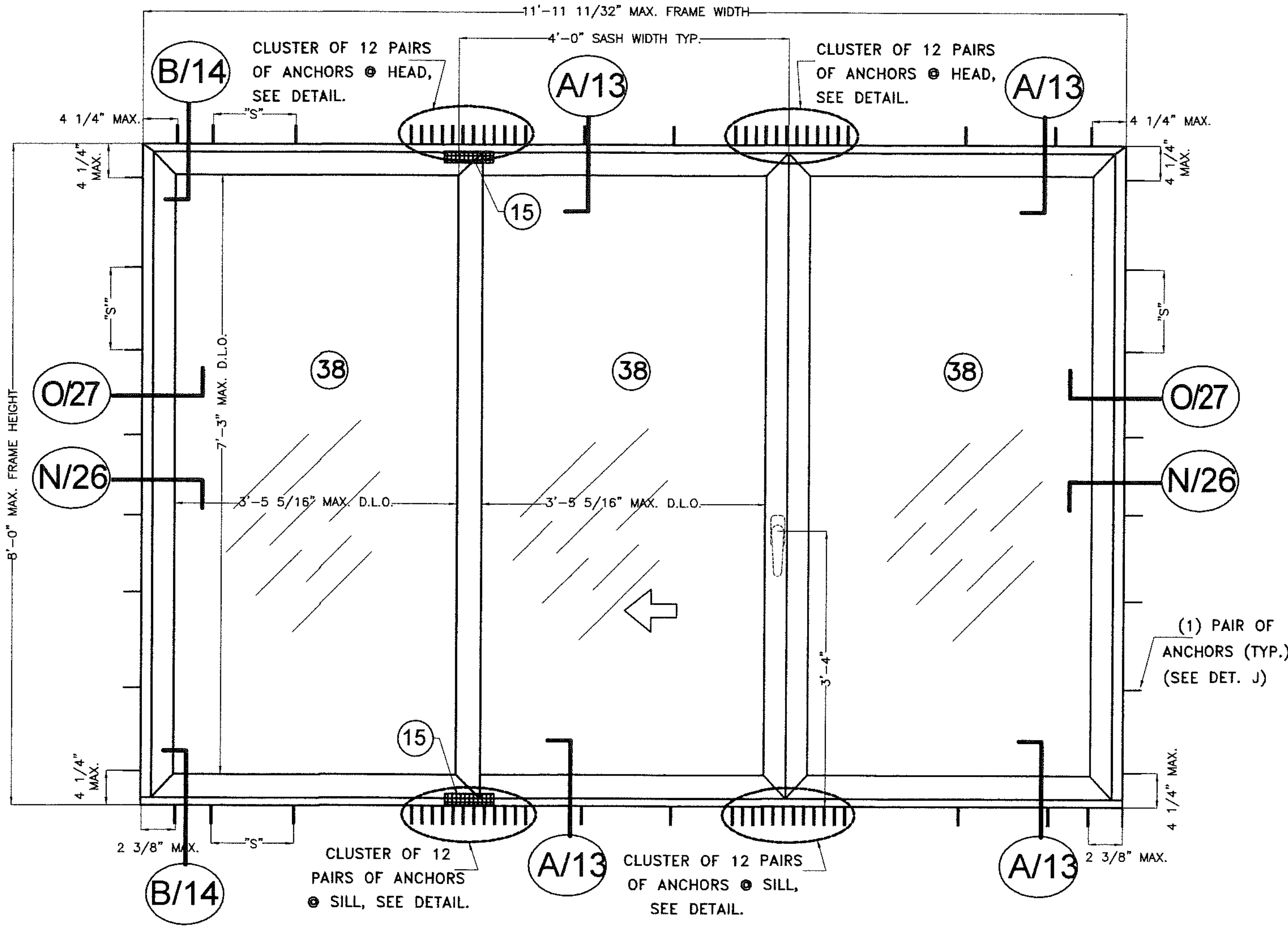


# TYPICAL EXTERIOR ELEVATION
# TRIPLE SASH DOOR (OXO) 2 TRACKS

MAXIMUM DESIGN LOAD: +80.0, -80.0 psf

SCALE: 1/2"=1'-0

**"S" = MAX. ANCHOR SPACING (SEE SCHEDULE ON SHEET 30).**

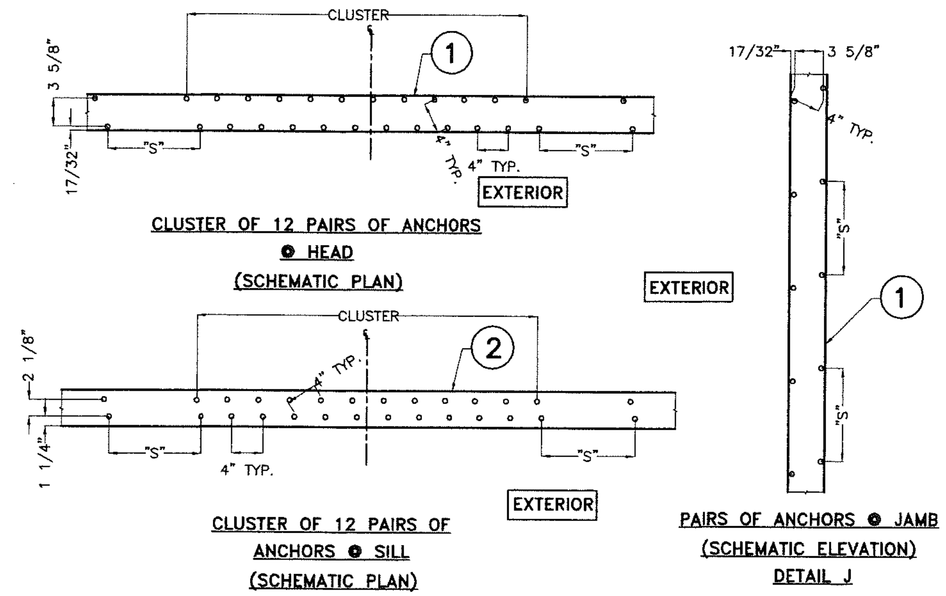


PRODUCT REVISED as complying with the Florida Building Code Acceptance No 15-0117.03 Expiration Date 11/13/23 By Ishaq I. Chanda Miami-Dade Product Control

FLORIDA BUILDING CODE (High Velocity Hurricane Zone)

WALTER A. TILLIT JR. LICENSE No. 44167 STATE OF FLORIDA PROFESSIONAL ENGINEER

MIAMI-DADE COUNTY | P.E. SEAL/SIGNATURE/DATE

© 2017 TILTECO INC.

TILTECO INC.
TILLIT TESTING & ENGINEERING COMPANY
6355 N.W. 36th. St., Ste. 305, VIRGINIA GARDENS, Fl 33166
Phone : (305)871-1530 . Fax : (305)871-1531
e-mail: tilteco@aol.com
EB-0006719
WALTER A. TILLIT Jr., P.E.
FLORIDA Lic. 44167

SERIES INTER 120, ALUMINUM SLIDING GLASS DOOR SMALL MISSILE IMPACT RESISTANT

| MANUFACTURER: | DISTRIBUTOR: |
|---|---|
| ALUCORP S.A. de C.V. CALLE 2 TAB CAT 17439 INT C x21 Y 25 COL. CHICHI SUAREZ, MERIDA, YUCATAN, MEXICO C.P. 97306 | MIDDKO LLC. 6700 NW 77 CT., SUITE 100 MIAMI, FL. 33166 |

| REV. NO | DESCRIPTION | DATE | REV. No | DESCRIPTION | DATE |
|---|---|---|---|---|---|
| 1 | OLD 10-044 | 12/11/17 | 3 | - | - |
| 2 | | | 4 | - | - |

M.L. DRAWN BY

12/11/17 DATE

17-272 DRAWING No

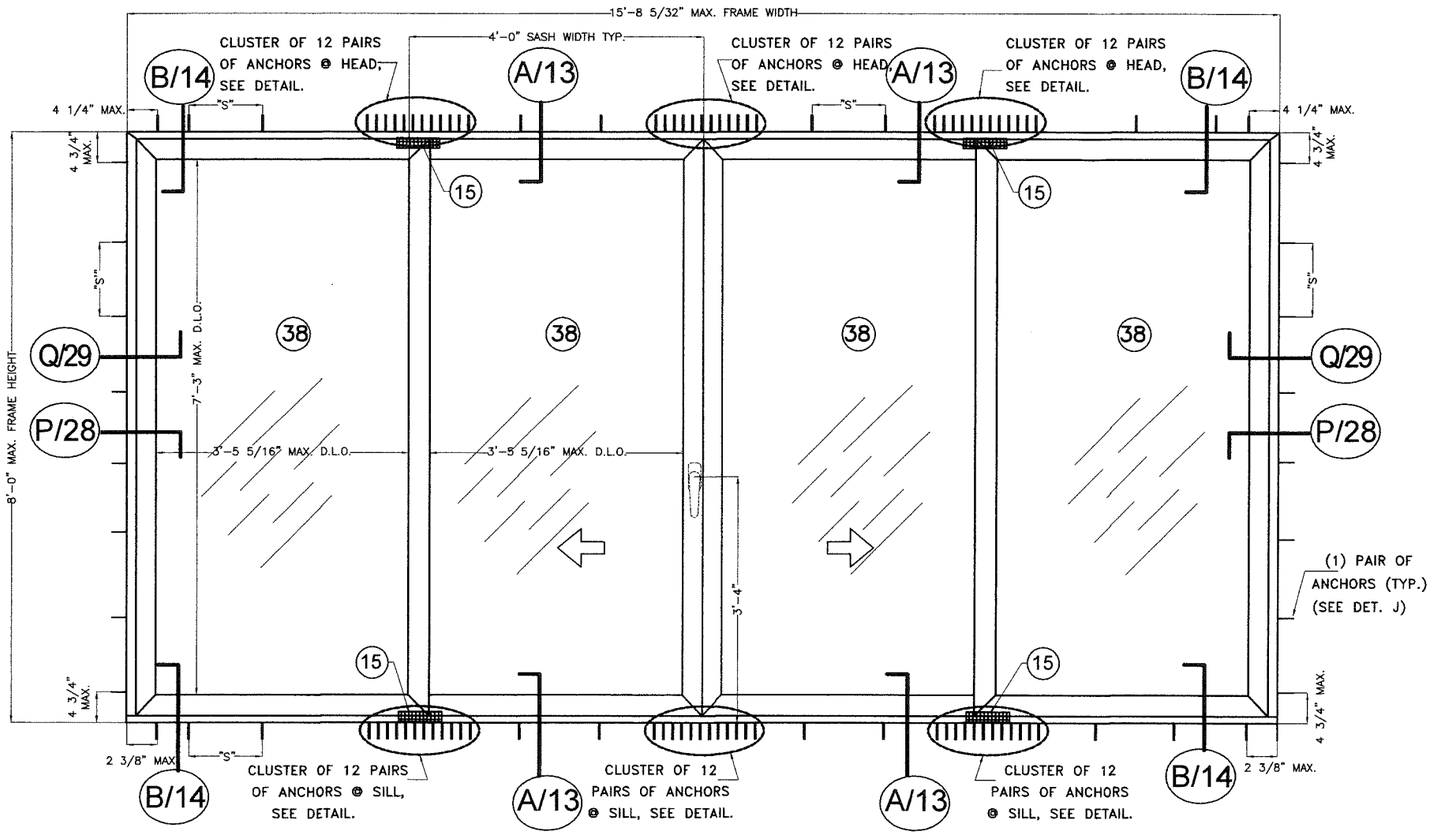


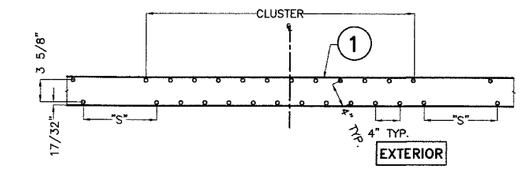


CLUSTER OF 12 PAIRS OF ANCHORS @ HEAD (SCHEMATIC PLAN)

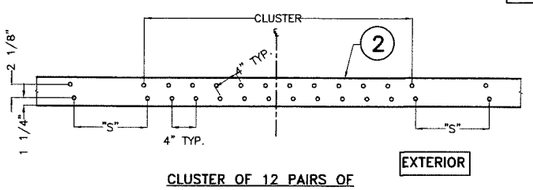


CLUSTER OF 12 PAIRS OF ANCHORS @ SILL (SCHEMATIC PLAN)

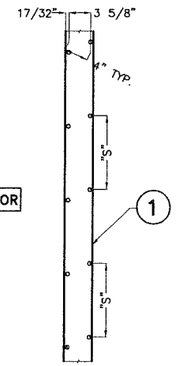


PAIRS OF ANCHORS @ JAMB (SCHEMATIC ELEVATION) DETAIL J

EXTERIOR

# TYPICAL EXTERIOR ELEVATION
# QUADRUPLE SASH DOOR (OXXO) 2 TRACKS

MAXIMUM DESIGN LOAD: +80.0, -80.0 psf

**"S" = MAX. ANCHOR SPACING (SEE SCHEDULE ON SHEET 30).**

PRODUCT REVIEWED
as complying with the Florida
Building Code
Acceptance No. 18-0117.03
Expiration Date 11/3/23
By Ishay I. Chana
Miami Dade Product Control

WALTER A. TILLIT JR. LICENSE No. 44167 STATE OF FLORIDA PROFESSIONAL ENGINEER

MIAMI-DADE COUNTY P.E. SEAL/SIGNATURE/DATE

© 2017 TILTECO INC.

TILTECO INC.
TILLIT TESTING & ENGINEERING COMPANY
6355 N.W. 36th. St., Ste. 305, VIRGINIA GARDENS, Fl 33166
Phone : (305)871-1530 . Fax : (305)871-1531
e-mail: tilteco@aol.com
EB-0006719
WALTER A. TILLIT Jr., P.E.
FLORIDA Lic. 44167

FLORIDA BUILDING CODE (High Velocity Hurricane Zone)

**SERIES INTER 120, ALUMINUM SLIDING GLASS DOOR SMALL MISSILE IMPACT RESISTANT**

MANUFACTURER:
**ALUCORP S.A. de C.V.**
CALLE 2 TAB CAT 17439 INT C x21 Y 25
COL. CHICHI SUAREZ,
MERIDA, YUCATAN, MEXICO
C.P. 97306

DISTRIBUTOR:
**MIDDKO LLC.**
6700 NW 77 CT., SUITE 100
MIAMI, FL. 33166

| REV. NO | DESCRIPTION | DATE | REV. No | DESCRIPTION | DATE |
|---|---|---|---|---|---|
| 1 | OLD 10-044 | 12/11/17 | 3 | – | – |
| 2 | | | 4 | – | – |

M.L.
DRAWN BY

12/11/17
DATE

17-272
DRAWING No

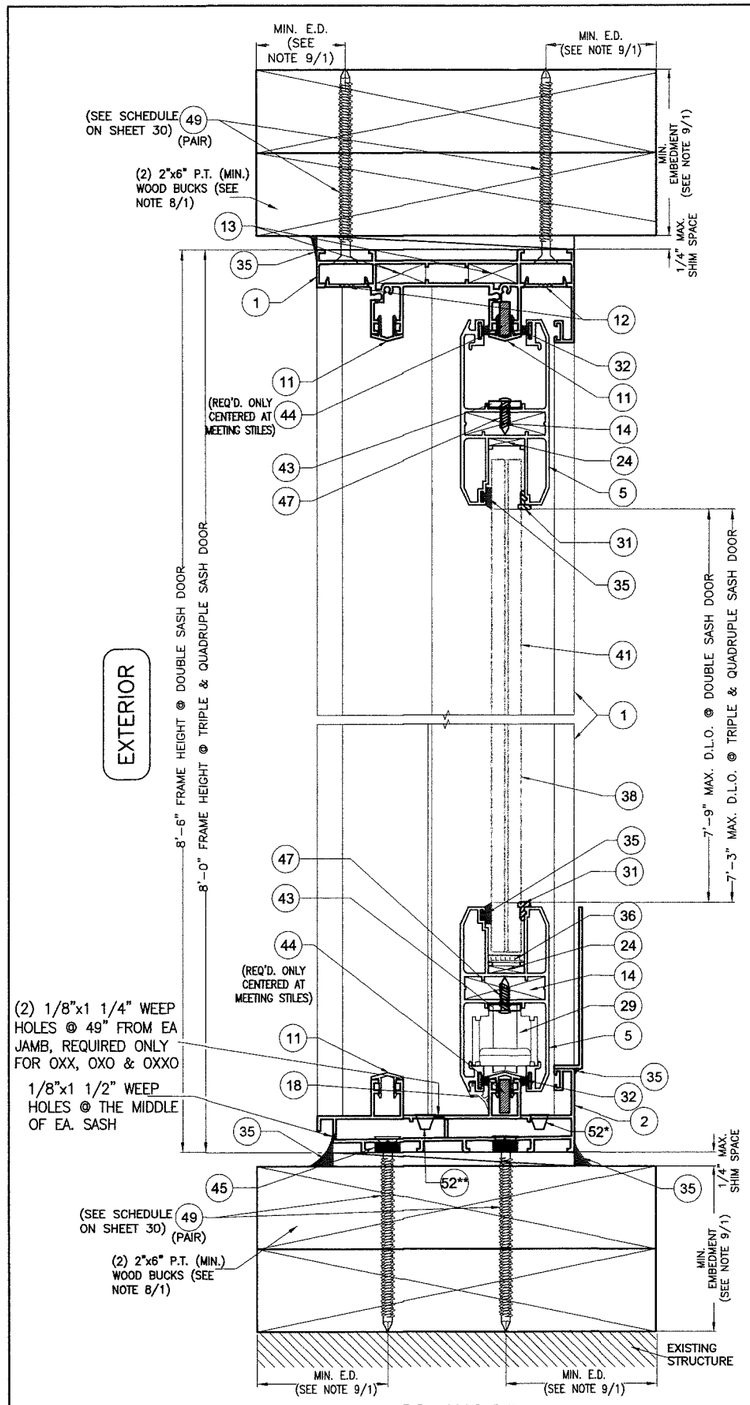


## TO WOOD

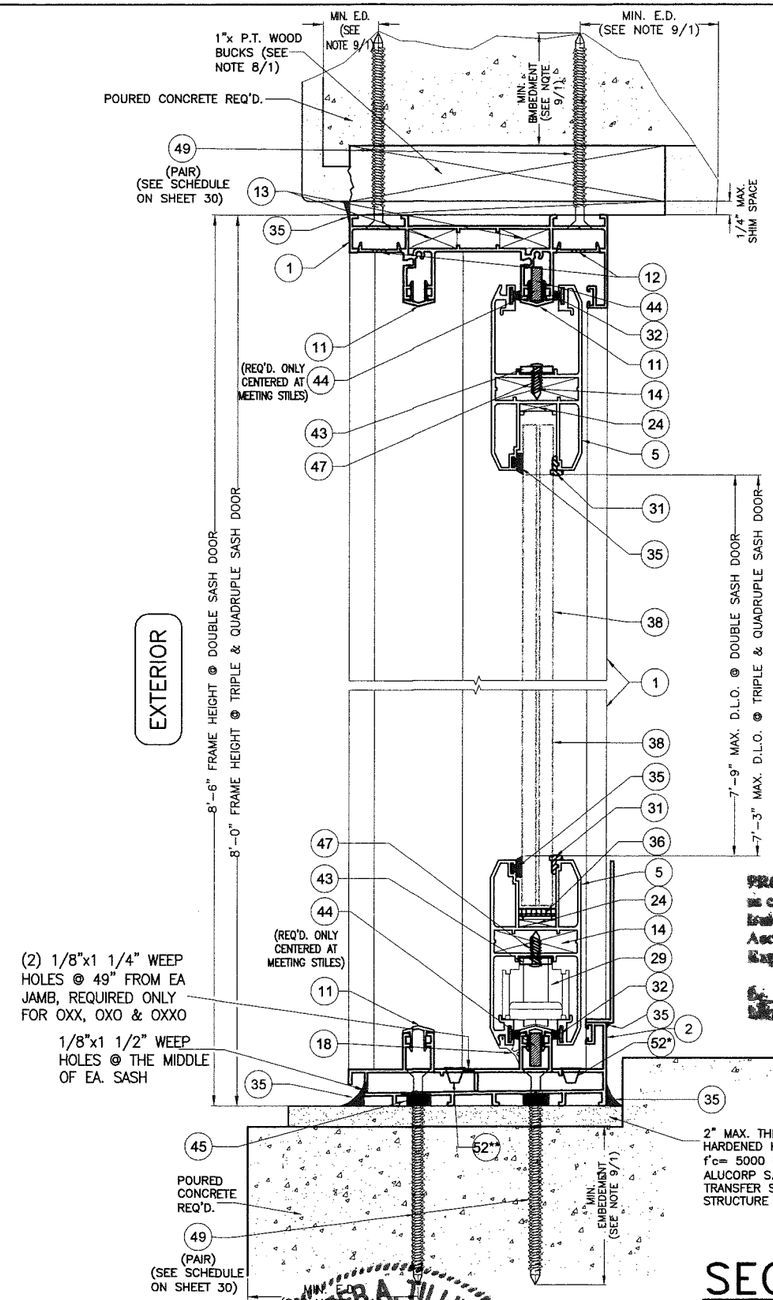


## TO POURED CONCRETE

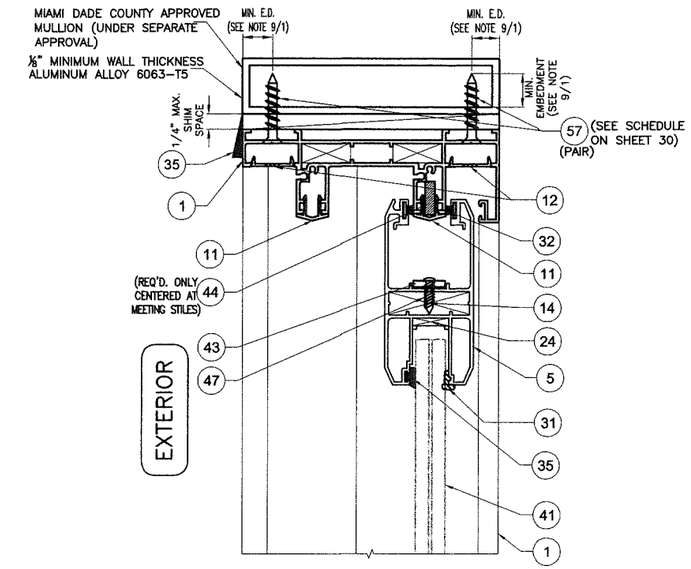


## TO ALUMINUM MULLION

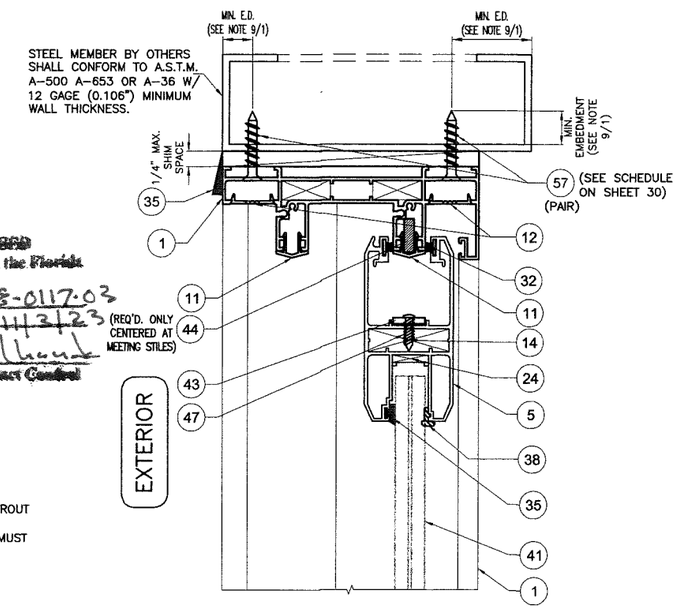


## TO STEEL MEMBER

## SECTIONS A-A

SCALE: 3/8"=1"

PRODUCT REVIEWED as complying with the Florida Building Code Acceptance No. 18-0117.03 Expiration Date 11/3/23 By Ishaq I. Thanh Miami-Dade Product Control

* a) (1) REQ'D. ONLY AT MIDDLE OF ALL SASHES FOR CONFIGURATIONS: XO, OX, XX.
b) (1) REQ'D @ MIDDLE OF OPERABLE SASHES FOR CONFIGURATIONS: OXX, OXO & OXXO.

** a) (6) @ 4 SASH DOORS REQUIRED FOR CONFIGURATION: OXXO; STARTING FROM THE JAMBS @ 5 1/2", THE REST @ MIDDLE OF SASHES.
b) (5) @ 3 SASH DOORS REQUIRED FOR CONFIGURATIONS: OXX & OXO; STARTING FROM THE JAMBS @ 5 1/2", THE REST @ MIDDLE OF SASHES.

WALTER A. TILLIT Jr. LICENSE No. 44167 STATE OF FLORIDA PROFESSIONAL ENGINEER 3/22/18

MIAMI-DADE COUNTY — P.E. SEAL/SIGNATURE/DATE

©2017 TILTECO INC.

TILTECO INC.
TILLIT TESTING & ENGINEERING COMPANY
6355 N.W. 36th. St., Ste. 305, VIRGINIA GARDENS, Fl 33166
Phone : (305)871-1530 . Fax : (305)871-1531
e-mail: tilteco@aol.com
EB-0006719
WALTER A. TILLIT Jr., P.E.
FLORIDA Lic. 44167

FLORIDA BUILDING CODE (High Velocity Hurricane Zone)

**SERIES INTER 120, ALUMINUM SLIDING GLASS DOOR SMALL MISSILE IMPACT RESISTANT**

MANUFACTURER:
**ALUCORP S.A. de C.V.**
CALLE 2 TAB CAT
17439 INT C x21 Y 25
COL. CHICHI SUAREZ,
MERIDA, YUCATAN, MEXICO
C.P. 97306

DISTRIBUTOR:
**MIDDKO LLC.**
6700 NW 77 CT., SUITE 100
MIAMI, FL. 33166

| REV. NO | DESCRIPTION | DATE | REV. No | DESCRIPTION | DATE |
|---|---|---|---|---|---|
| 1 | OLD 10-044 | 12/11/17 | 3 | – | – |
| 2 | M.D.C COMMENTS | 3/22/18 | 4 | – | – |

| | |
|---|---|
| M.L. DRAWN BY | |
| 12/11/17 DATE | |
| 17-272 DRAWING No | |
| SHEET 13 OF 31 | |

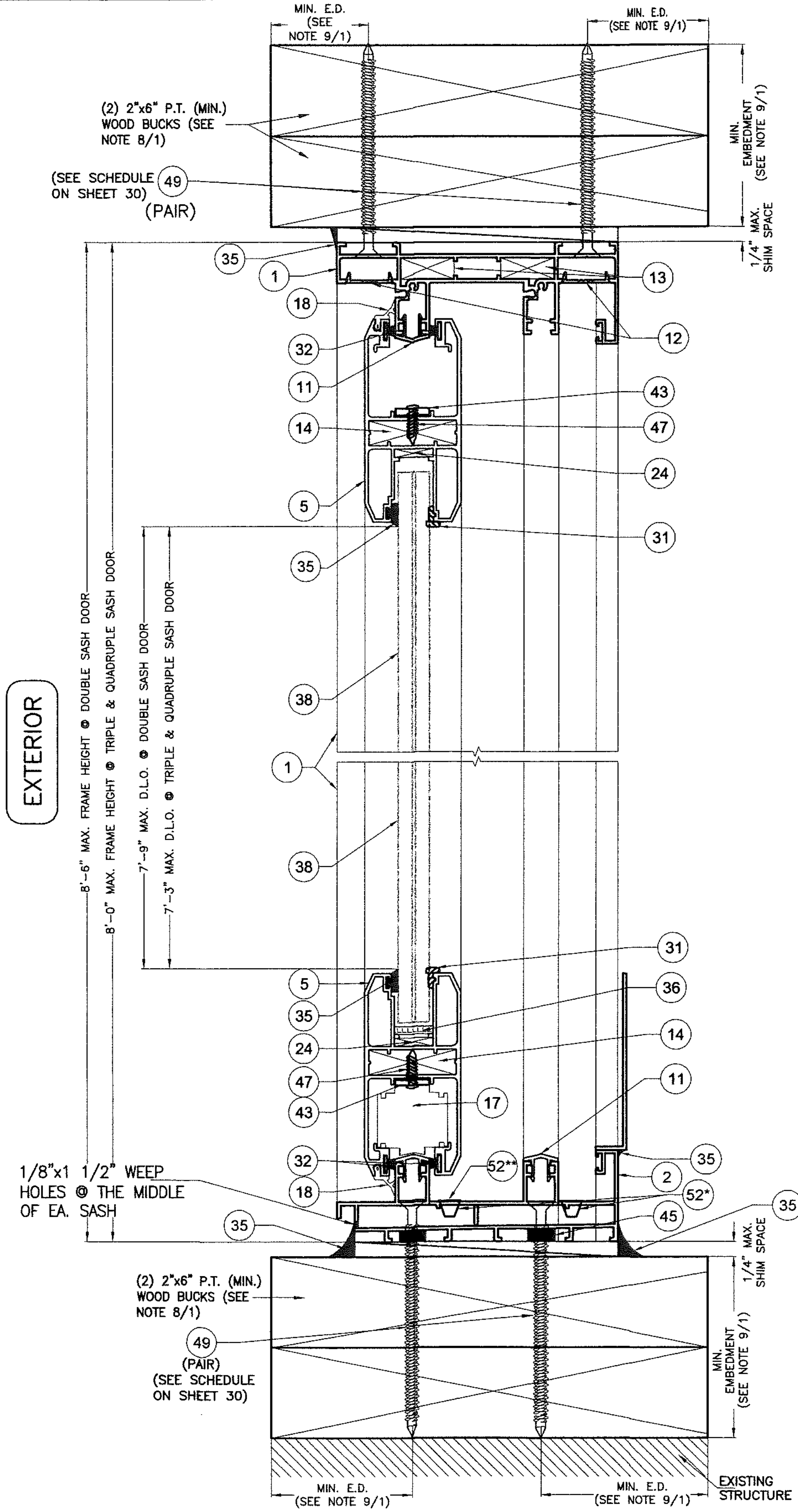


TO WOOD

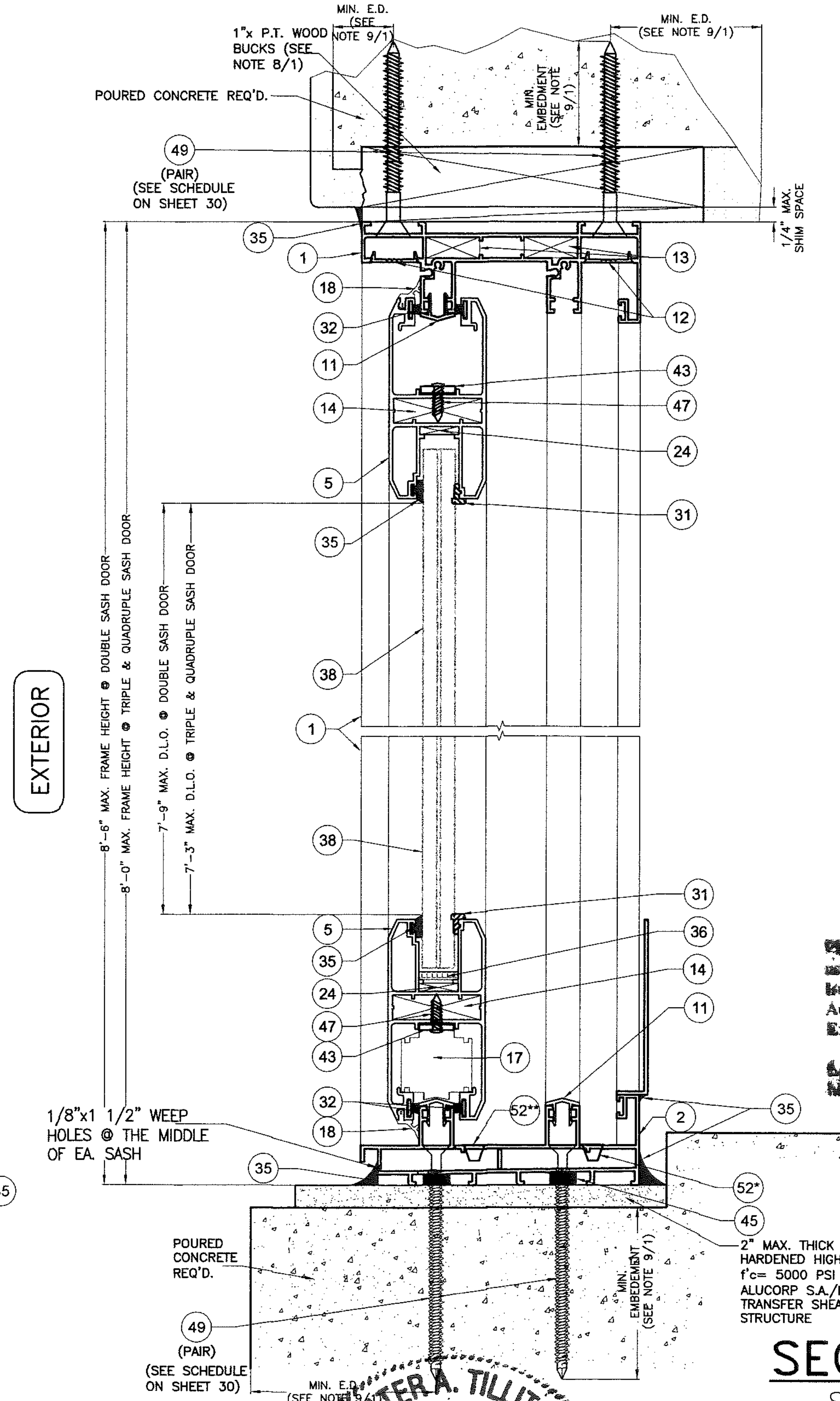


TO POURED CONCRETE

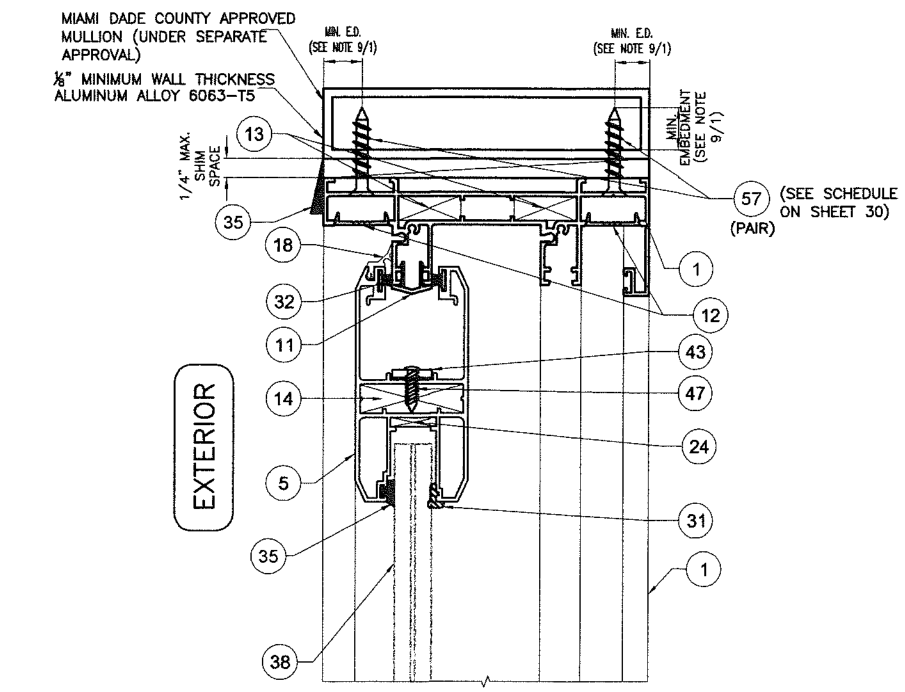


TO ALUMINUM MULLION

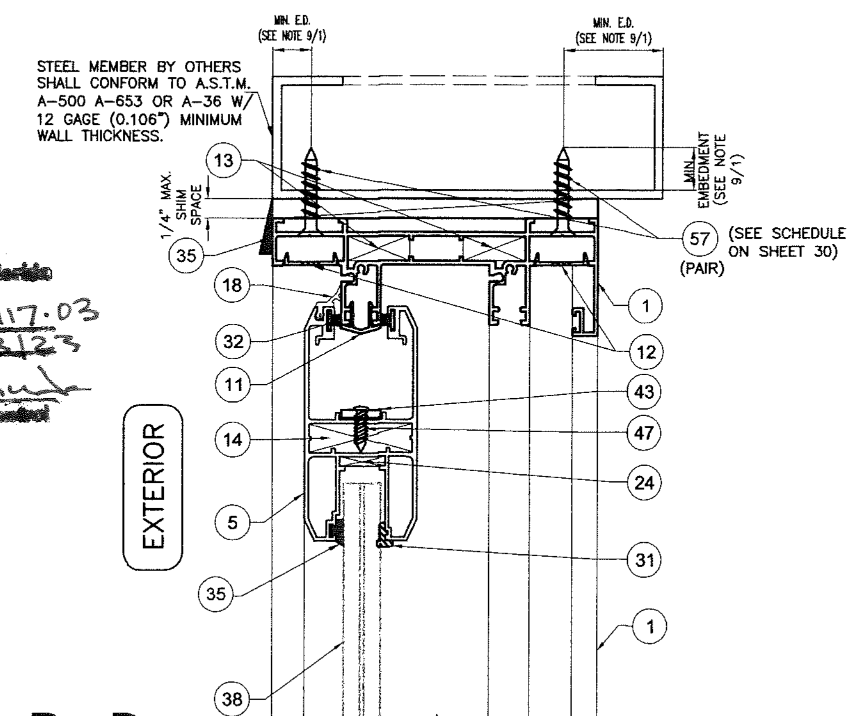


TO STEEL MEMBER

# SECTIONS B-B

SCALE: 3/8"=1"

PRODUCT REVISED as complying with the Florida Building Code Acceptance No 18-0117.03 Expiration Date 11/3/23 By [signature] Miami Dade Product Control

* a) (1) REQ'D. ONLY AT MIDDLE OF ALL SASHES FOR CONFIGURATIONS: XO, OX, XX.
b) (1) REQ'D @ MIDDLE OF OPERABLE SASHES FOR CONFIGURATIONS: OXX, OXO & OXXO.

** a) (6) @ 4 SASH DOORS REQUIRED FOR CONFIGURATION: OXXO; STARTING FROM THE JAMBS @ 5 1/2", THE REST @ MIDDLE OF SASHES.
b) (5) @ 3 SASH DOORS REQUIRED FOR CONFIGURATIONS: OXX & OXO; STARTING FROM THE JAMBS @ 5 1/2", THE REST @ MIDDLE OF SASHES.

FLORIDA BUILDING CODE (High Velocity Hurricane Zone)

WALTER A. TILLIT JR. LICENSE No. 44167 STATE OF FLORIDA PROFESSIONAL ENGINEER

MIAMI-DADE COUNTY | P.E. SEAL/SIGNATURE/DATE

© 2017 TILTECO INC.

TILTECO INC.

TILLIT TESTING & ENGINEERING COMPANY
6355 N.W. 36th. St., Ste. 305, VIRGINIA GARDENS, Fl 33166
Phone : (305)871-1530 . Fax : (305)871-1531
e-mail: tilteco@aol.com
EB-0006719
WALTER A. TILLIT Jr., P.E.
FLORIDA Lic. 44167

SERIES INTER 120, ALUMINUM SLIDING GLASS DOOR SMALL MISSILE IMPACT RESISTANT

MANUFACTURER: ALUCORP S.A. de C.V.
CALLE 2 TAB CAT 17439 INT C x21 Y 25 COL. CHICHI SUAREZ, MERIDA, YUCATAN, MEXICO C.P. 97306

DISTRIBUTOR: MIDDKO LLC.
6700 NW 77 CT., SUITE 100 MIAMI, FL. 33166

| REV. NO | DESCRIPTION | DATE | REV. No | DESCRIPTION | DATE |
|---|---|---|---|---|---|
| 1 | OLD 10-044 | 12/11/17 | 3 | - | - |
| 2 | M.D.C COMMENTS | 3/22/18 | 4 | - | - |

M.L. DRAWN BY

12/11/17 DATE

17-272 DRAWING No

SHEET 14 OF 31

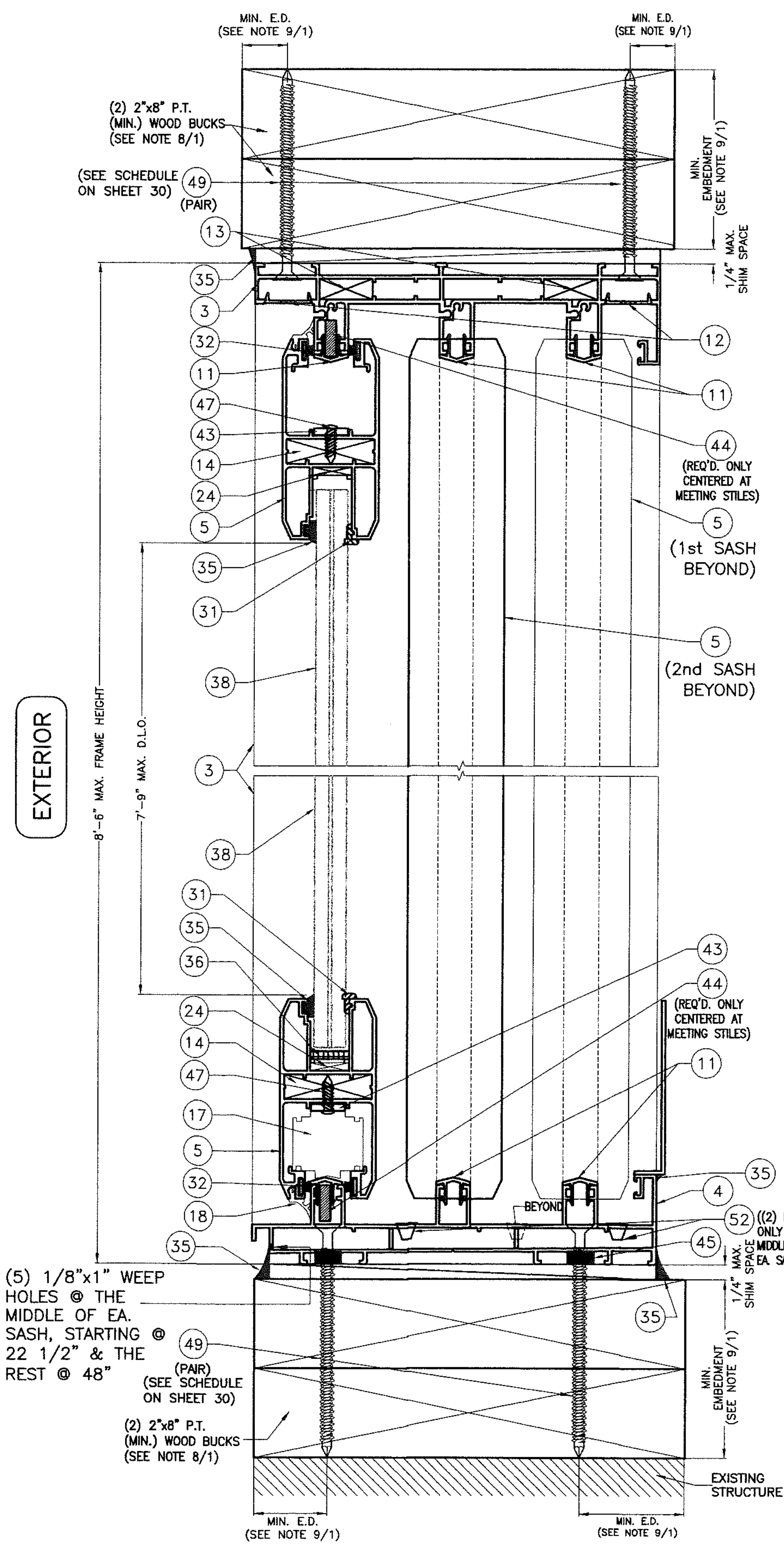


## TO WOOD

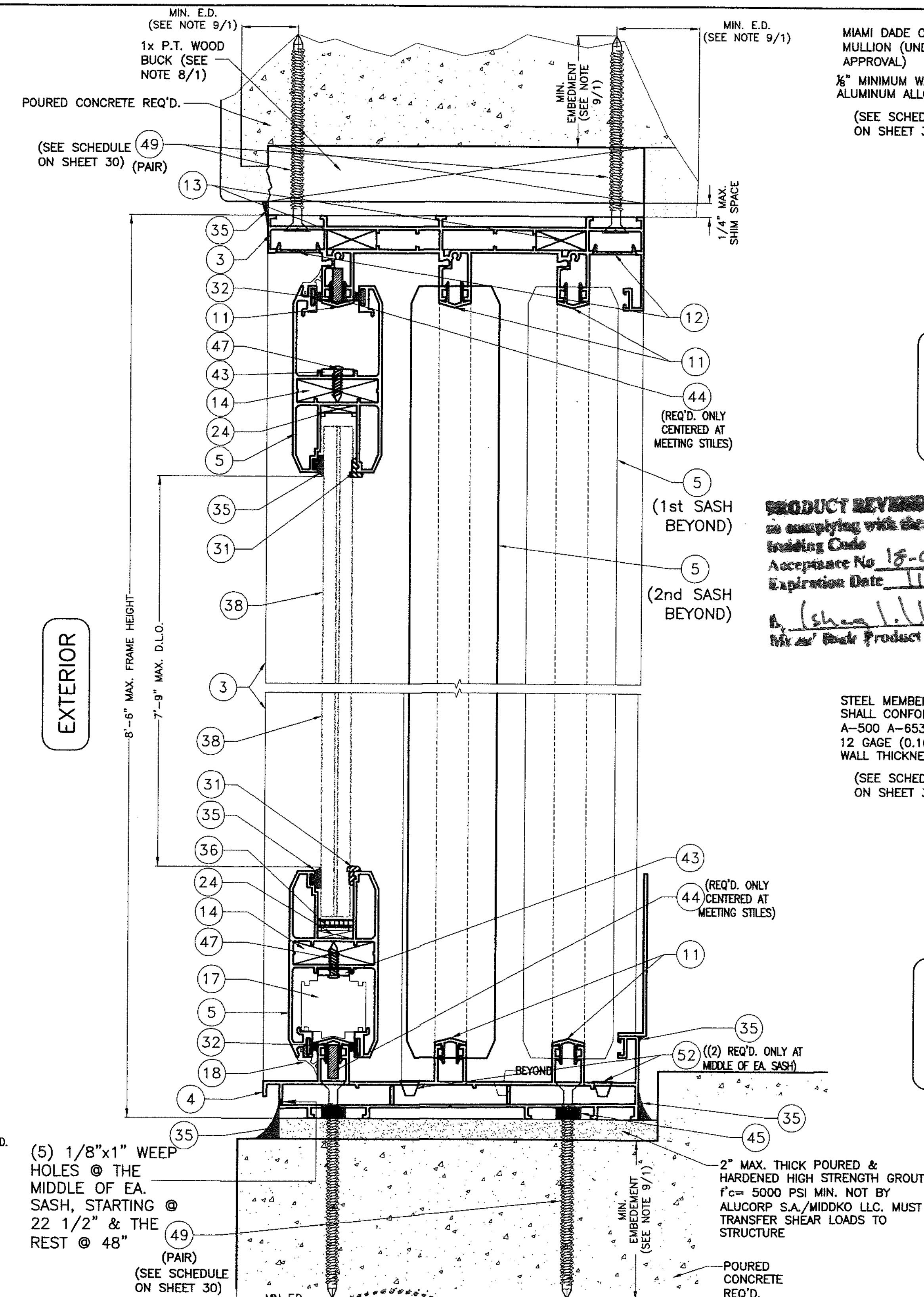


## TO POURED CONCRETE

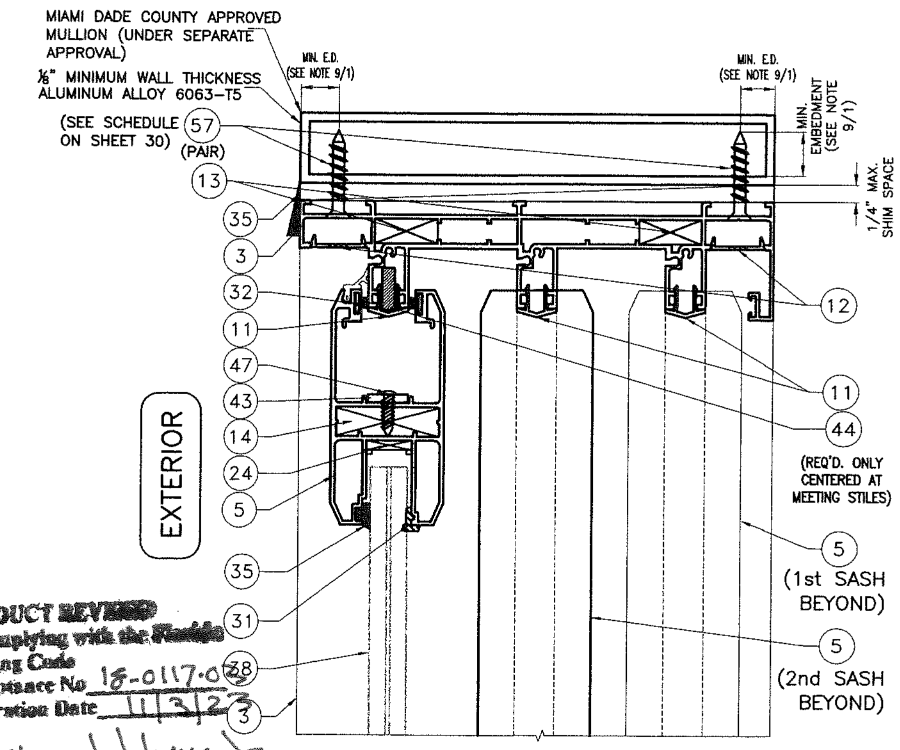


PRODUCT REVISED as complying with the Florida Building Code
Acceptance No 18-0117.08
Expiration Date 11/3/23
By [signature]
Miami Dade Product Control

## TO ALUMINUM MULLION

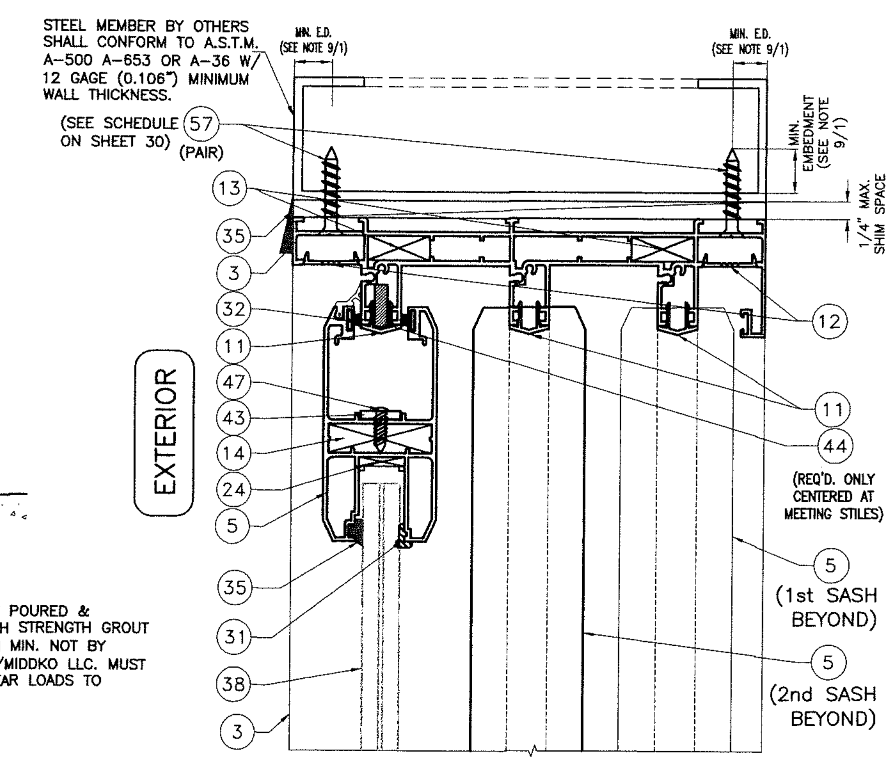


## TO STEEL MEMBER

# SECTIONS C-C

SCALE: 3/8"=1"

FLORIDA BUILDING CODE (High Velocity Hurricane Zone)

WALTER A. TILLIT JR. LICENSE No. 44167 STATE OF FLORIDA PROFESSIONAL ENGINEER

MIAMI-DADE COUNTY | P.E. SEAL/SIGNATURE/DATE

©2017 TILTECO INC.

TILTECO INC.

TILLIT TESTING & ENGINEERING COMPANY

6355 N.W. 36th. St., Ste. 305, VIRGINIA GARDENS, Fl 33166
Phone : (305)871-1530 . Fax : (305)871-1531
e-mail: tilteco@aol.com
EB-0006719
WALTER A. TILLIT Jr., P.E.
FLORIDA Lic. 44167

**SERIES INTER 120, ALUMINUM SLIDING GLASS DOOR SMALL MISSILE IMPACT RESISTANT**

MANUFACTURER: ALUCORP S.A. de C.V.
CALLE 2 TAB CAT 17439 INT C x21 Y 25 COL. CHICHI SUAREZ, MERIDA, YUCATAN, MEXICO C.P. 97306

DISTRIBUTOR: MIDDKO LLC.
6700 NW 77 CT., SUITE 100 MIAMI, FL. 33166

| REV. NO | DESCRIPTION | DATE | REV. No | DESCRIPTION | DATE |
|---|---|---|---|---|---|
| 1 | OLD 10-044 | 12/11/17 | 3 | - | - |
| 2 | M.D.C COMMENTS | 3/22/18 | 4 | - | - |

M.L. DRAWN BY

12/11/17 DATE

17-272 DRAWING No

SHEET 15 OF 31

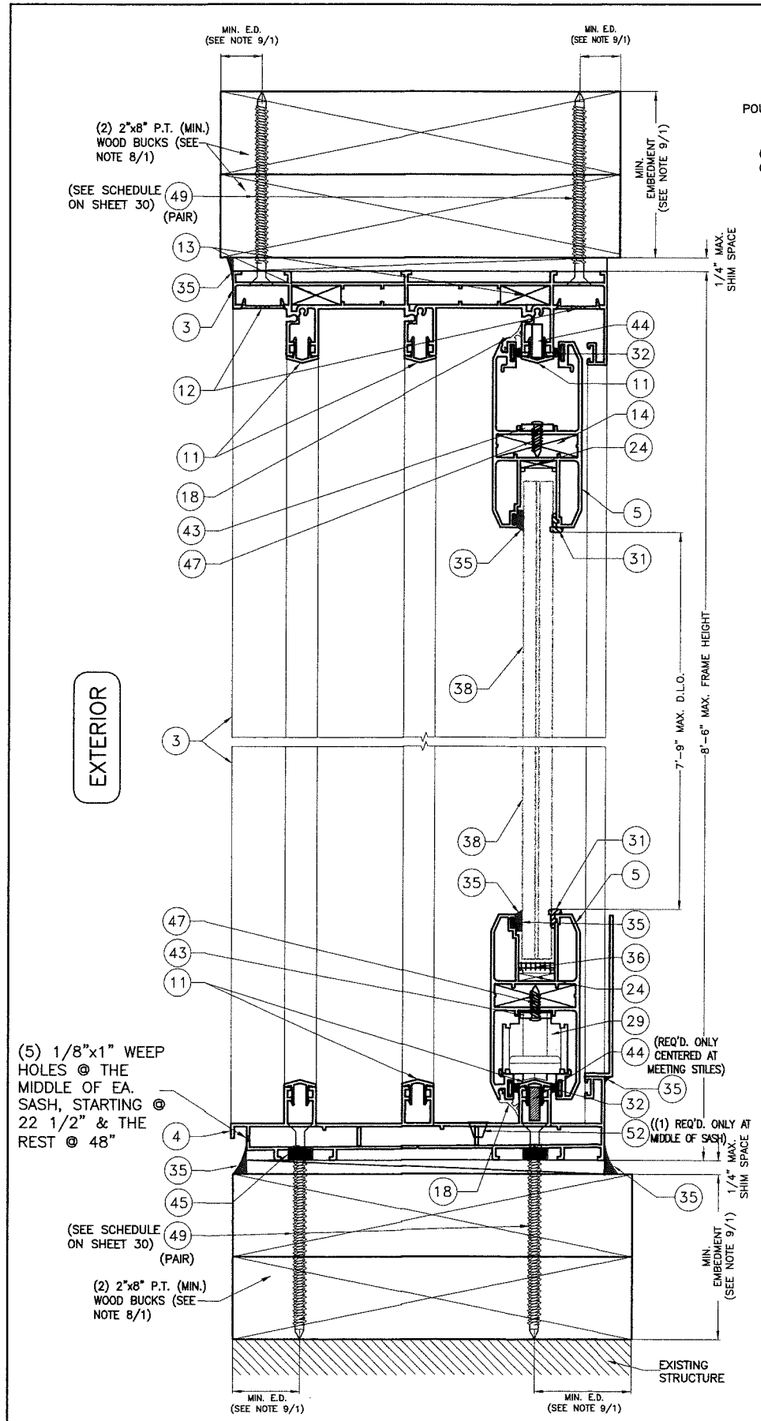


TO WOOD

## SECTIONS D-D

SCALE: 3/8"=1"

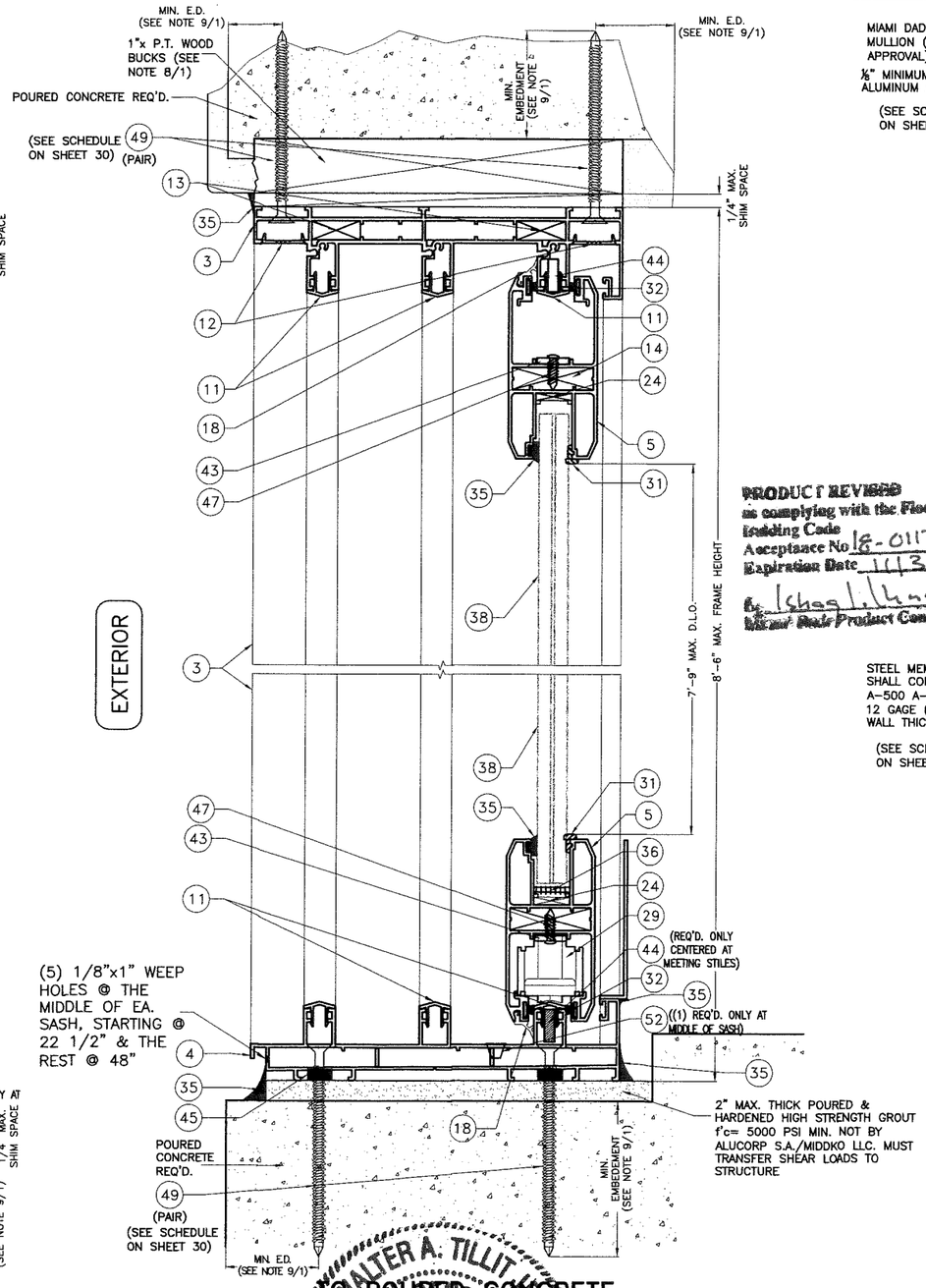


TO POURED CONCRETE

PRODUCT REVIEWED as complying with the Florida Building Code Acceptance No. 18-0117.03 Expiration Date 11/3/23 By Miami-Dade Product Control

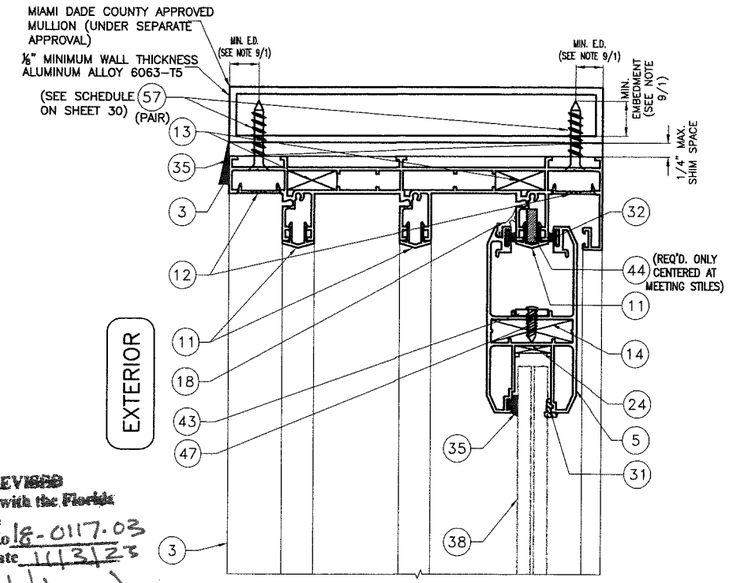


TO ALUMINUM MULLION

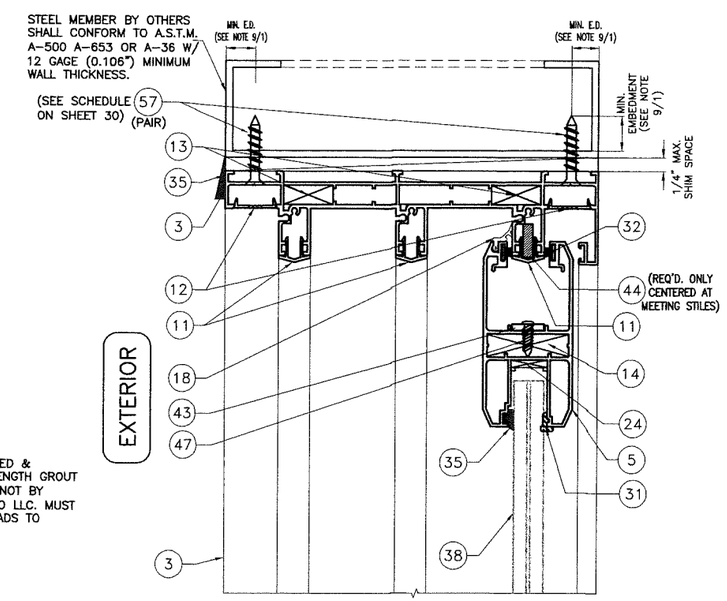


TO STEEL MEMBER

FLORIDA BUILDING CODE (High Velocity Hurricane Zone)

WALTER A. TILLIT JR. LICENSE No. 44167 STATE OF FLORIDA PROFESSIONAL ENGINEER 3/22/18

MIAMI-DADE COUNTY | P.E. SEAL/SIGNATURE/DATE

©2017 TILTECO INC.

TILTECO INC.
TILLIT TESTING & ENGINEERING COMPANY
6355 N.W. 36th. St., Ste. 305, VIRGINIA GARDENS, Fl 33166
Phone : (305)871-1530 . Fax : (305)871-1531
e-mail: tilteco@aol.com
EB-0006719
WALTER A. TILLIT Jr., P.E.
FLORIDA Lic. 44167

SERIES INTER 120, ALUMINUM SLIDING GLASS DOOR SMALL MISSILE IMPACT RESISTANT

MANUFACTURER: ALUCORP S.A. de C.V.
CALLE 2 TAB CAT 17439 INT C X21 Y 25 COL. CHICHI SUAREZ, MERIDA, YUCATAN, MEXICO C.P. 97306

DISTRIBUTOR: MIDDKO LLC.
6700 NW 77 CT., SUITE 100 MIAMI, FL. 33166

| REV. NO | DESCRIPTION | DATE | REV. No | DESCRIPTION | DATE |
|---|---|---|---|---|---|
| 1 | OLD 10-044 | 12/11/17 | 3 | - | - |
| 2 | M.D.C COMMENTS | 3/22/18 | 4 | - | - |

M.L. DRAWN BY

12/11/17 DATE

17-272 DRAWING No

SHEET 16 OF 31

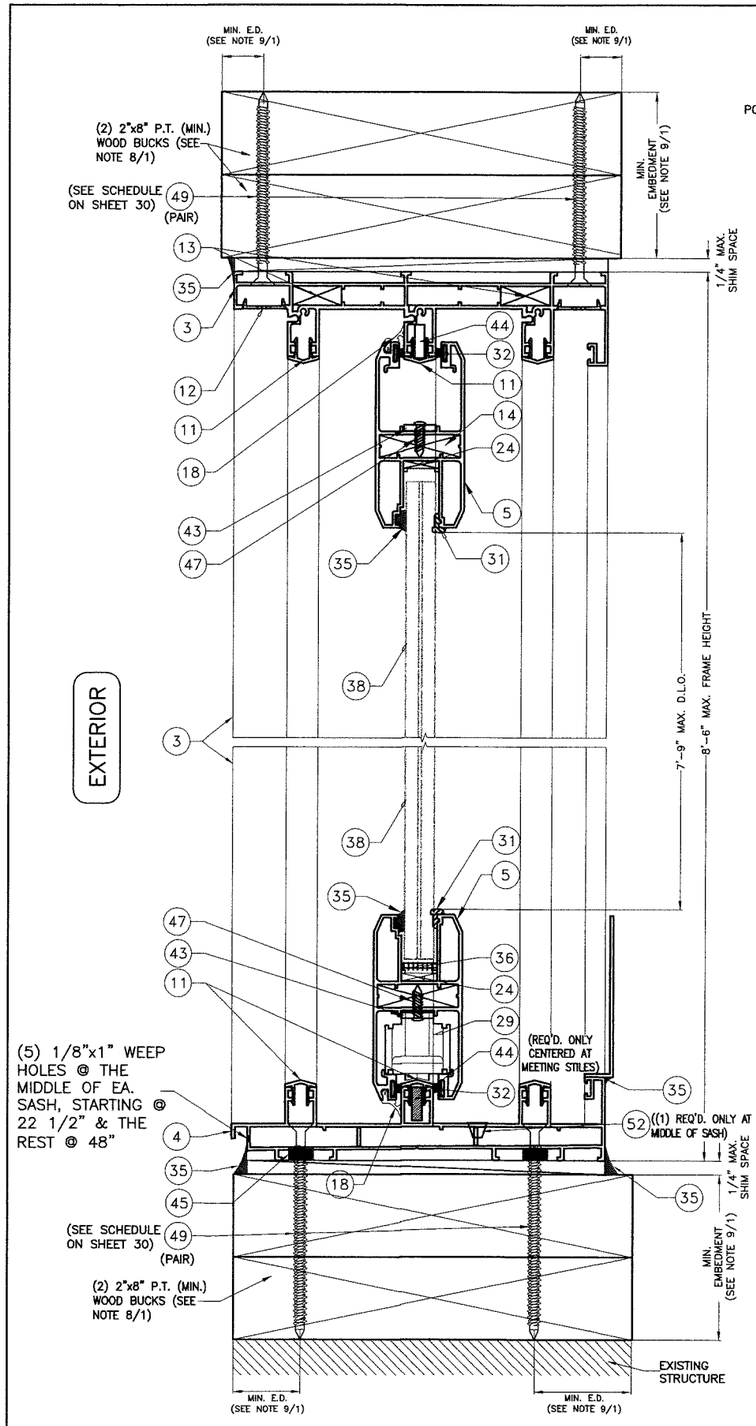


TO WOOD

SECTIONS D'-D'

SCALE: 3/8"=1"

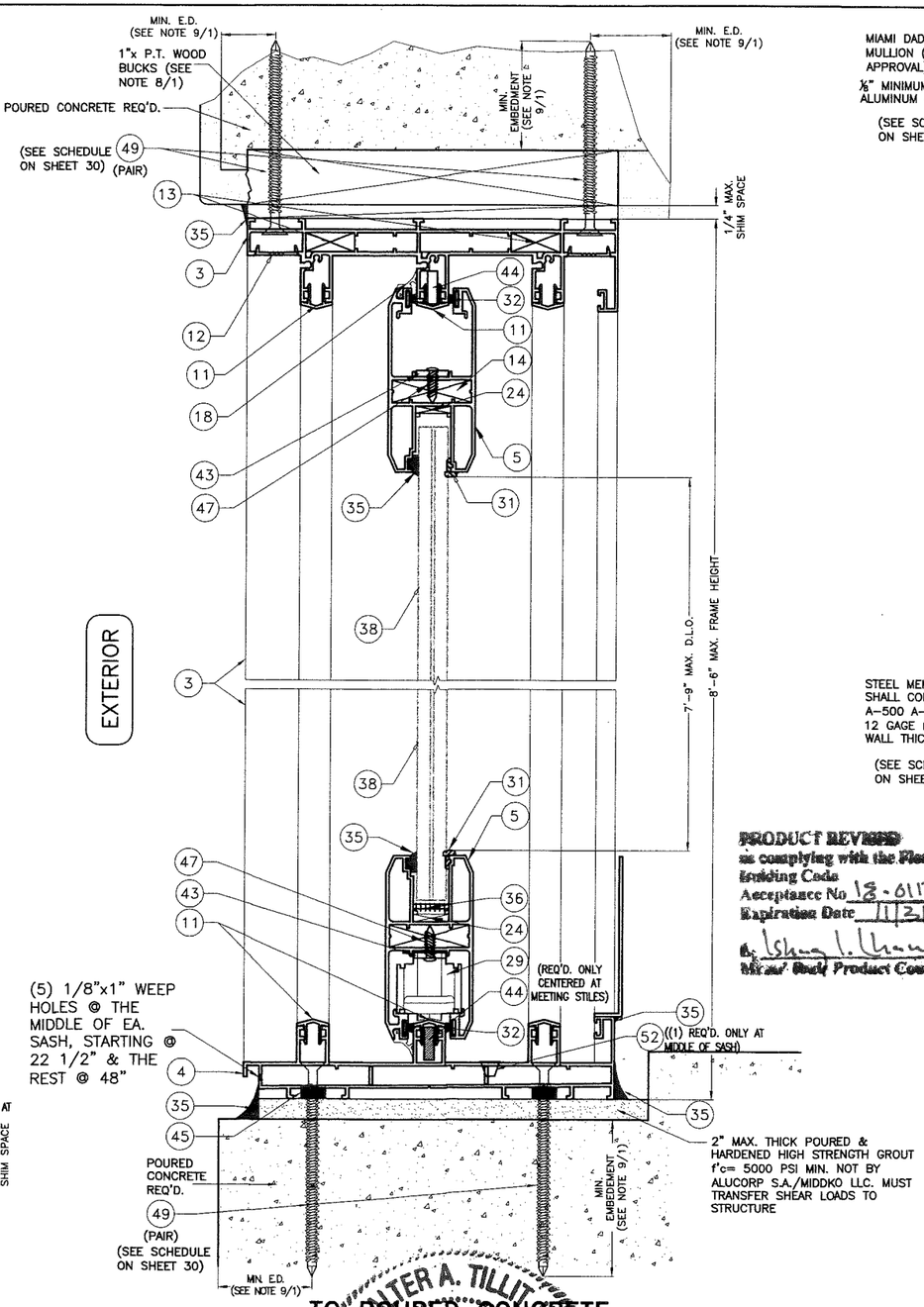


TO POURED CONCRETE

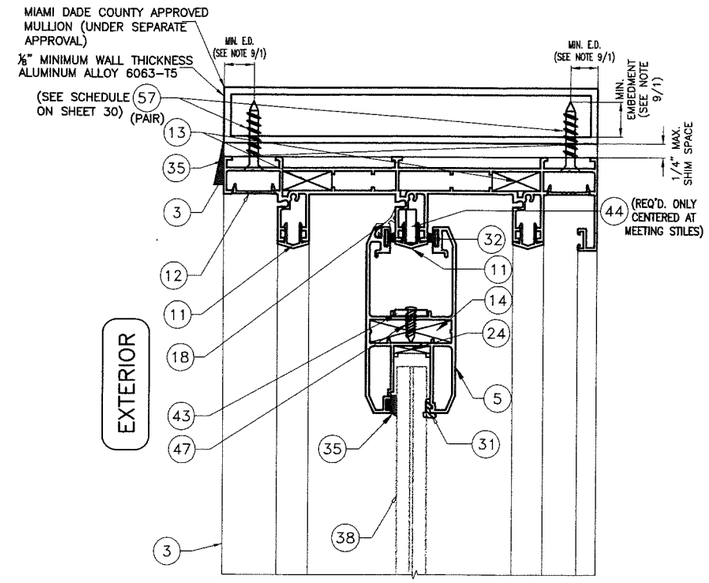


TO ALUMINUM MULLION

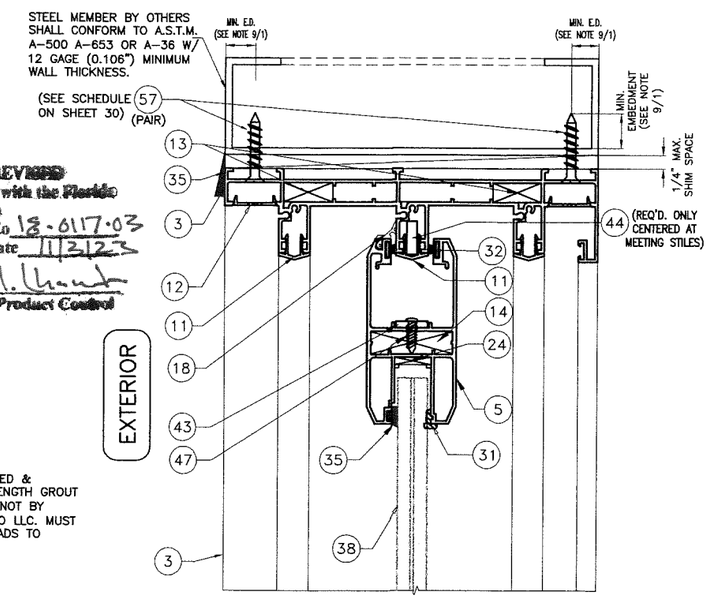


TO STEEL MEMBER

PRODUCT REVIEWED as complying with the Florida Building Code
Acceptance No. 18-0117.03
Expiration Date 11/3/23
Miami-Dade Product Control

FLORIDA BUILDING CODE (High Velocity Hurricane Zone)

WALTER A. TILLIT LICENSE No. 44167 STATE OF FLORIDA PROFESSIONAL ENGINEER

MIAMI-DADE COUNTY

P.E. SEAL/SIGNATURE/DATE

© 2017 TILTECO INC.

TILTECO INC.
TILLIT TESTING & ENGINEERING COMPANY
6355 N.W. 36th. St., Ste. 305, VIRGINIA GARDENS, Fl 33166
Phone : (305)871-1530 . Fax : (305)871-1531
e-mail: tilteco@aol.com
EB-0006719
WALTER A. TILLIT Jr., P.E.
FLORIDA Lic. 44167

SERIES INTER 120, ALUMINUM SLIDING GLASS DOOR SMALL MISSILE IMPACT RESISTANT

MANUFACTURER:
ALUCORP S.A. de C.V.
CALLE 2 TAB CAT
17439 INT C x21 Y 25
COL. CHICHI SUAREZ,
MERIDA, YUCATAN, MEXICO
C.P. 97306

DISTRIBUTOR:
MIDDKO LLC.
6700 NW 77 CT., SUITE 100
MIAMI, FL. 33166

| REV. NO | DESCRIPTION | DATE | REV. No | DESCRIPTION | DATE |
|---|---|---|---|---|---|
| 1 | OLD 10-044 | 12/11/17 | 3 | - | - |
| 2 | M.D.C COMMENTS | 3/22/18 | 4 | - | - |

M.L.
DRAWN BY

12/11/17
DATE

17-272
DRAWING No

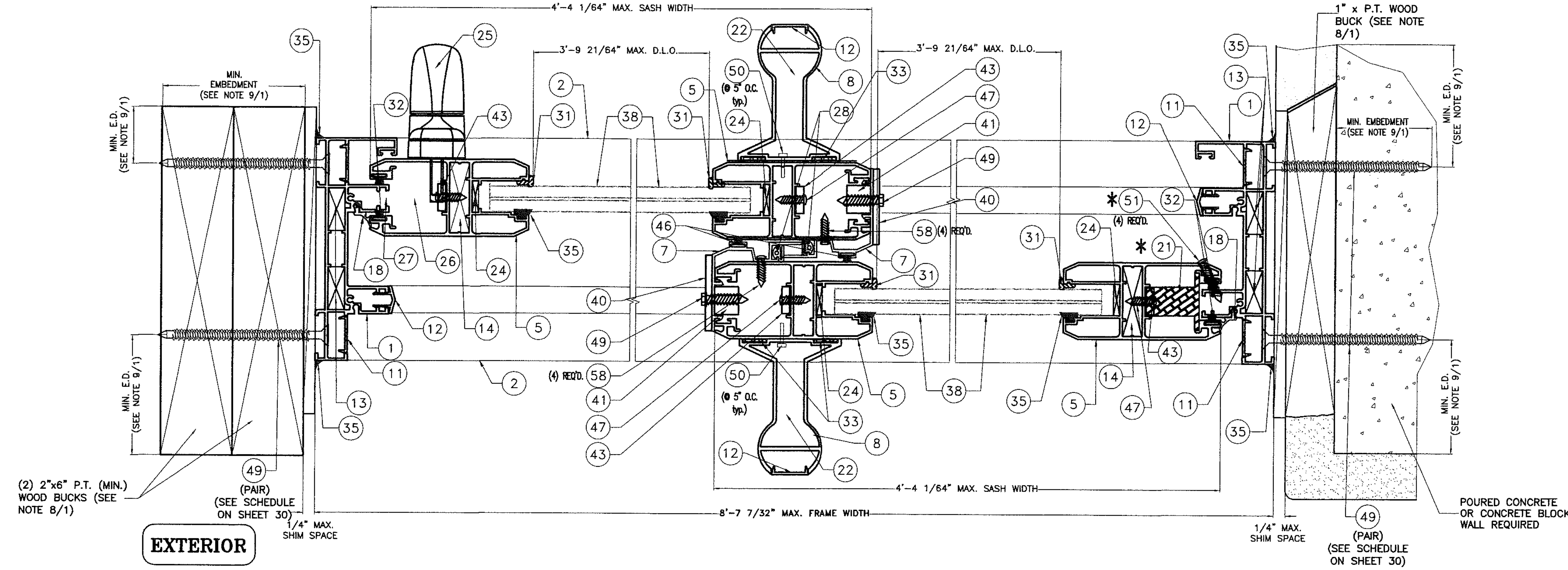


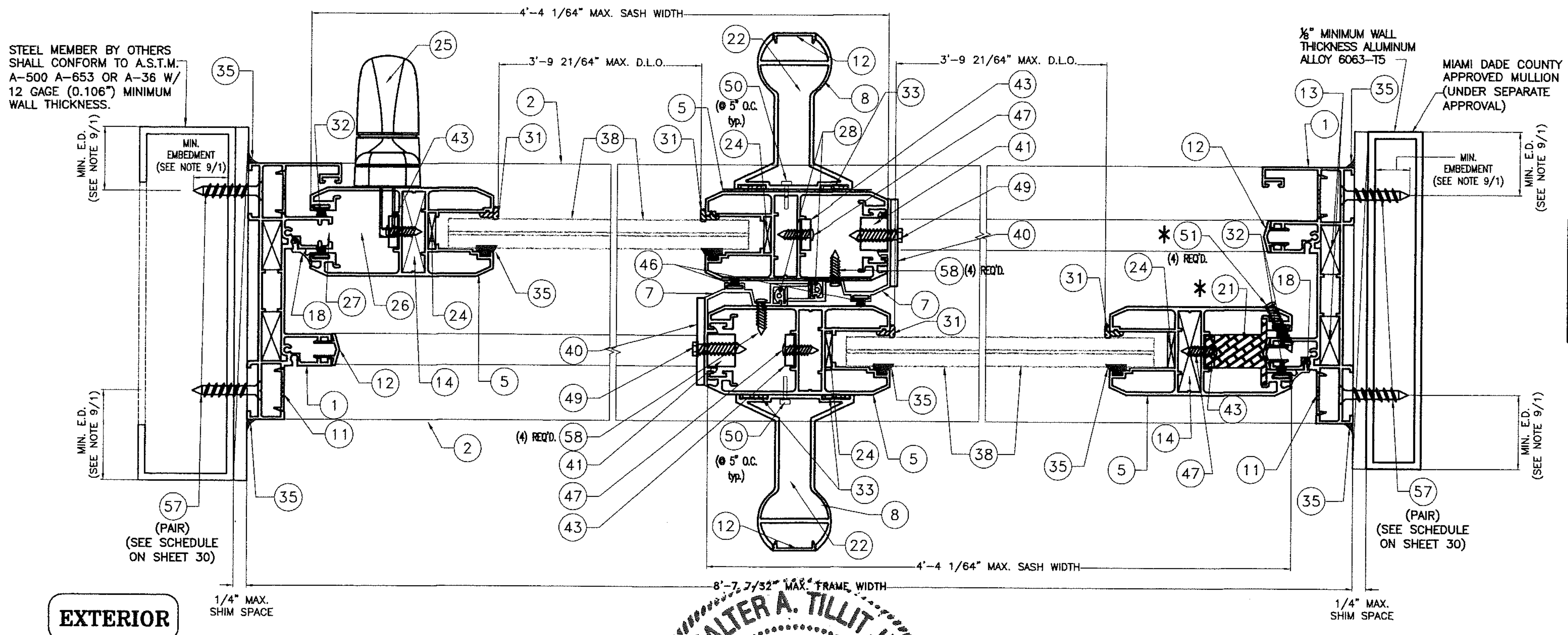


*REQUIRED @ FIXED (O) SASHES ONLY. LOCATE (51) AT 11 1/4", 36 3/4", 63 1/2" & 89" FROM THE BOTTOM RAIL.

PRODUCT REVISED as complying with the Florida Building Code
Acceptance No 18-0117.03
Expiration Date 11/13/23
By [signature]
Miami Dade Product Control

# SECTIONS E-E (XO) OR (XO REVERSED)

SCALE: 3/8"=1"

FLORIDA BUILDING CODE (High Velocity Hurricane Zone)

WALTER A. TILLIT JR. LICENSE No. 44167 STATE OF FLORIDA PROFESSIONAL ENGINEER

MIAMI-DADE COUNTY

P.E. SEAL/SIGNATURE/DATE

© 2017 TILTECO INC.

TILTECO INC.
TILLIT TESTING & ENGINEERING COMPANY
6355 N.W. 36th. St., Ste. 305, VIRGINIA GARDENS, Fl 33166
Phone : (305)871-1530 . Fax : (305)871-1531
e-mail: tilteco@aol.com
EB-0006719
WALTER A. TILLIT Jr., P.E.
FLORIDA Lic. 44167

SERIES INTER 120, ALUMINUM SLIDING GLASS DOOR SMALL MISSILE IMPACT RESISTANT

| MANUFACTURER: | DISTRIBUTOR: |
|---|---|
| ALUCORP S.A. de C.V. CALLE 2 TAB CAT 17439 INT C x21 Y 25 COL. CHICHI SUAREZ, MERIDA, YUCATAN, MEXICO C.P. 97306 | MIDDKO LLC. 6700 NW 77 CT., SUITE 100 MIAMI, FL. 33166 |

| REV. NO | DESCRIPTION | DATE | REV. No | DESCRIPTION | DATE |
|---|---|---|---|---|---|
| 1 | OLD 10-044 | 12/11/17 | 3 | – | – |
| 2 | | | 4 | – | – |

M.L. DRAWN BY
12/11/17 DATE
17-272 DRAWING No
SHEET 17 OF 31

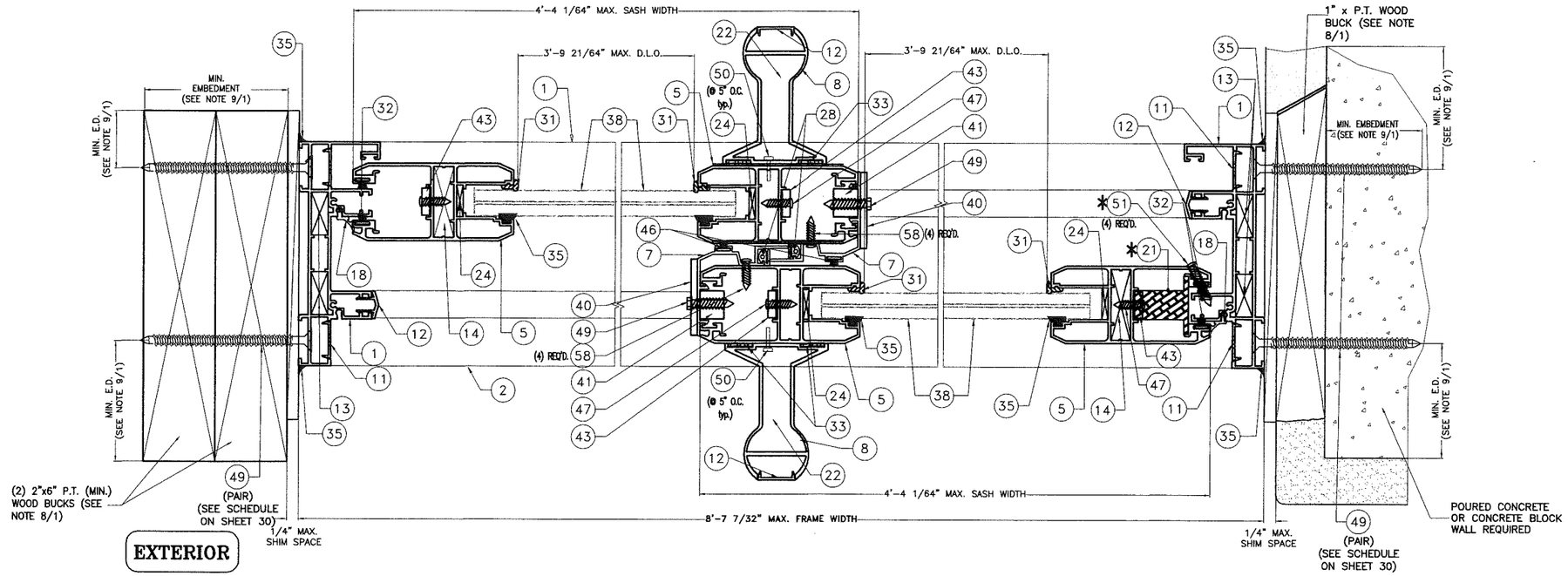


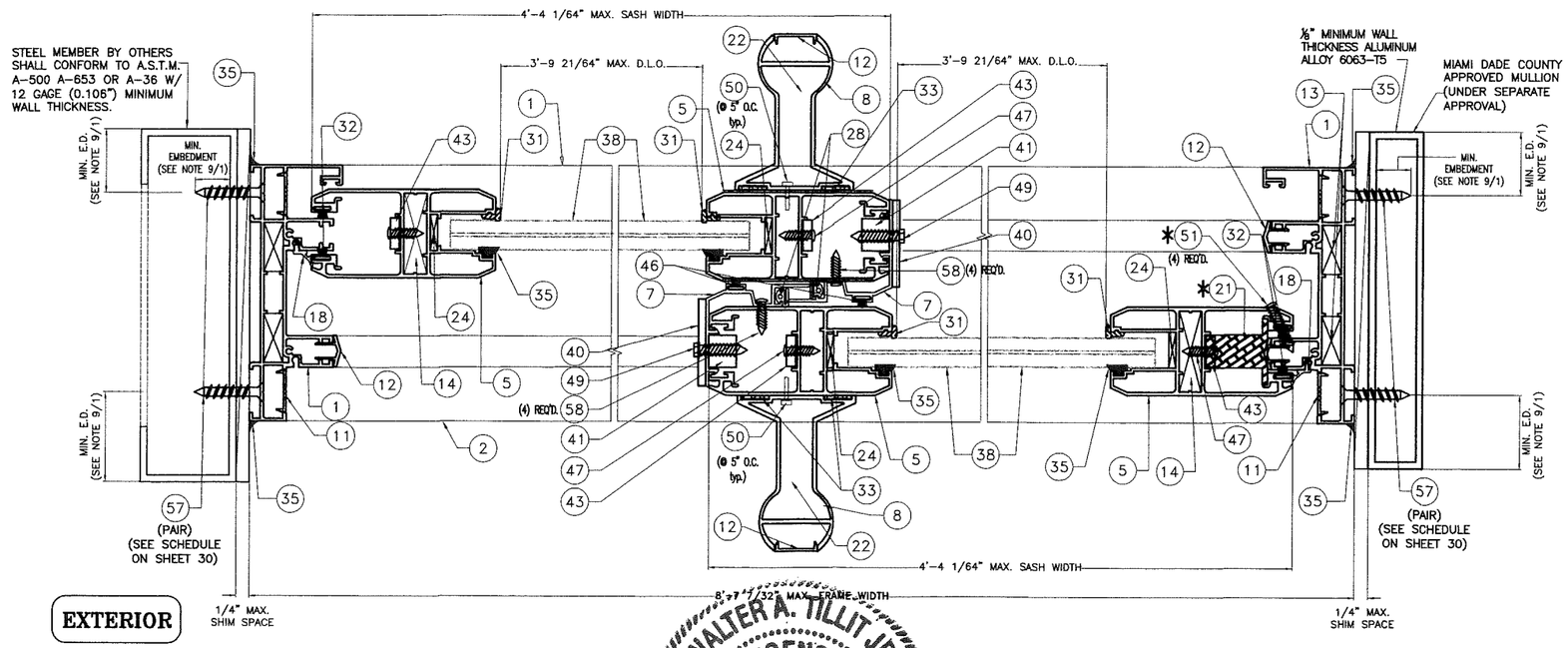


*REQUIRED @ FIXED (O) SASHES ONLY. LOCATE (51) AT 11 1/4", 36 3/4", 63 1/2" & 89" FROM THE BOTTOM RAIL.

PRODUCT REVIEWED as complying with the Florida Building Code
Acceptance No. 18-0117.03
Expiration Date 11/3/23
Miami-Dade Product Control

# SECTIONS F-F (XO) OR (XO REVERSED)

SCALE: 3/8"=1"

WALTER A. TILLIT JR. LICENSE No. 44167 STATE OF FLORIDA PROFESSIONAL ENGINEER

MIAMI-DADE COUNTY P.E. SEAL/SIGNATURE/DATE

©2017 TILTECO INC.

TILTECO INC.
TILLIT TESTING & ENGINEERING COMPANY
6355 N.W. 36th. St., Ste. 305, VIRGINIA GARDENS, Fl 33166
Phone : (305)871-1530 . Fax : (305)871-1531
e-mail: tilteco@aol.com
EB-0006719
WALTER A. TILLIT Jr., P.E.
FLORIDA Lic. 44167

FLORIDA BUILDING CODE (High Velocity Hurricane Zone)

SERIES INTER 120, ALUMINUM SLIDING GLASS DOOR SMALL MISSILE IMPACT RESISTANT

MANUFACTURER: ALUCORP S.A. de C.V.
CALLE 2 TAB CAT 17439 INT C x21 Y 25 COL. CHICHI SUAREZ, MERIDA, YUCATAN, MEXICO C.P. 97306

DISTRIBUTOR: MIDDKO LLC.
6700 NW 77 CT., SUITE 100 MIAMI, FL. 33166

| REV. NO | DESCRIPTION | DATE | REV. No | DESCRIPTION | DATE |
|---|---|---|---|---|---|
| 1 | OLD 10-044 | 12/11/17 | 3 | - | - |
| 2 | | | 4 | - | - |

M.L. DRAWN BY

12/11/17 DATE

17-272 DRAWING No

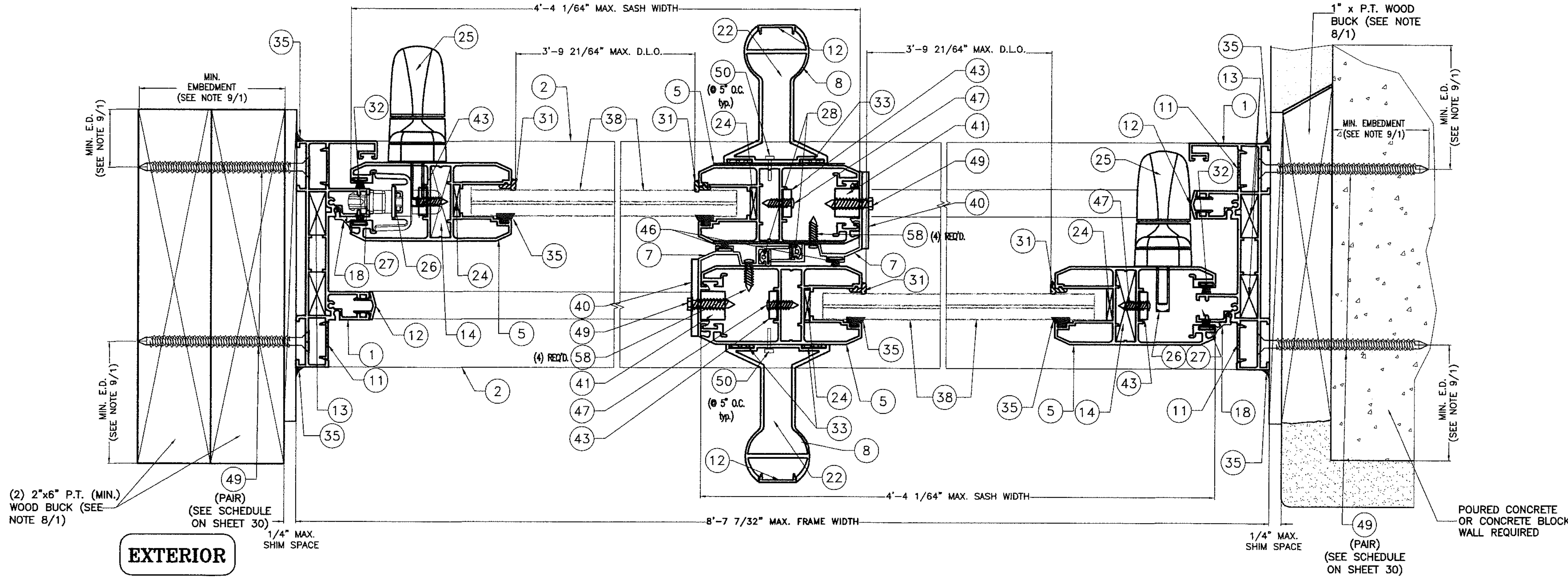


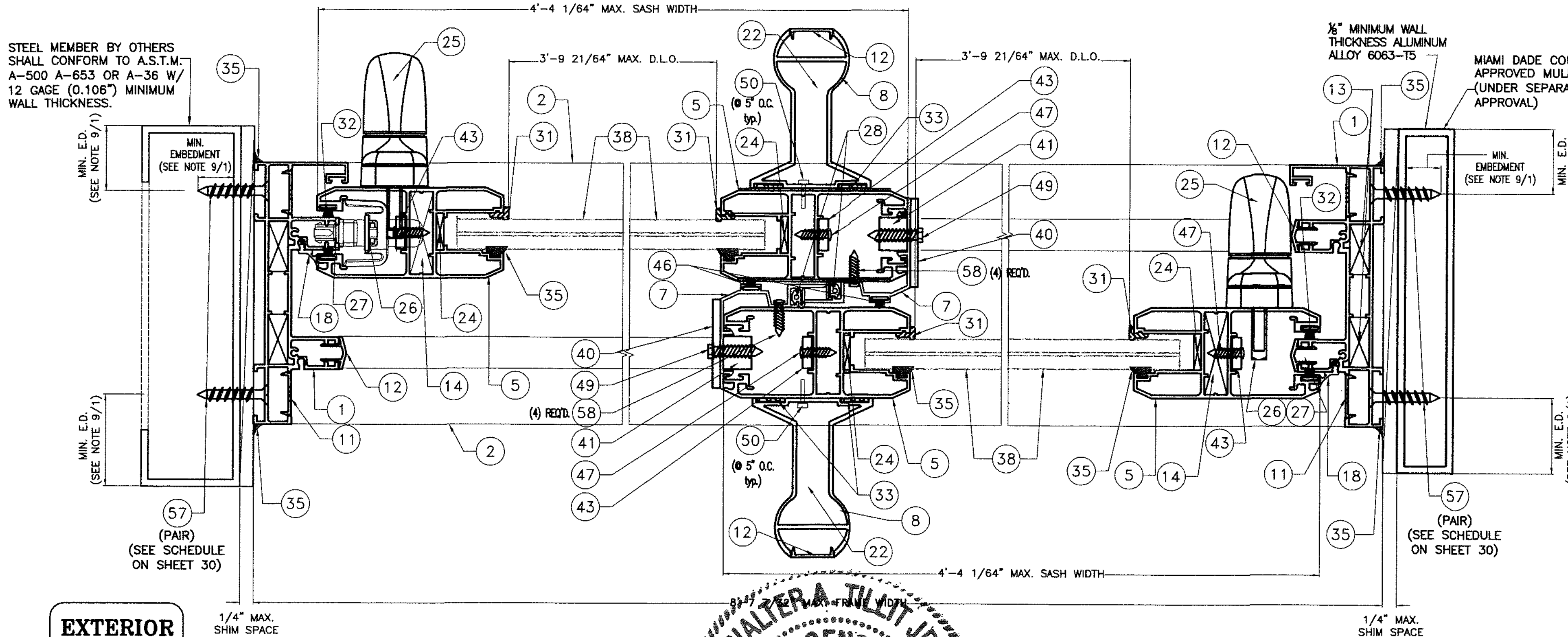


PRODUCT REVISED as complying with the Florida Building Code Acceptance No 18-0117.03 Expiration Date 11/3/23 By [signature] Miami Dade Product Control

FLORIDA BUILDING CODE (High Velocity Hurricane Zone)

# SECTIONS G-G (XX)

SCALE: 3/8"=1"

WALTER A. TILLIT JR. LICENSE No. 44167 STATE OF FLORIDA PROFESSIONAL ENGINEER

MIAMI-DADE COUNTY | P.E. SEAL/SIGNATURE/DATE

© 2017 TILTECO INC.

TILTECO INC.
TILLIT TESTING & ENGINEERING COMPANY
6355 N.W. 36th. St., Ste. 305, VIRGINIA GARDENS, Fl 33166
Phone : (305)871-1530 . Fax : (305)871-1531
e-mail: tilteco@aol.com
EB-0006719
WALTER A. TILLIT Jr., P.E.
FLORIDA Lic. 44167

SERIES INTER 120, ALUMINUM SLIDING GLASS DOOR SMALL MISSILE IMPACT RESISTANT

MANUFACTURER: ALUCORP S.A. de C.V.
CALLE 2 TAB CAT 17439 INT C x21 Y 25 COL. CHICHI SUAREZ, MERIDA, YUCATAN, MEXICO C.P. 97306

DISTRIBUTOR: MIDDKO LLC.
6700 NW 77 CT., SUITE 100 MIAMI, FL. 33166

| REV. No | DESCRIPTION | DATE | REV. No | DESCRIPTION | DATE |
|---|---|---|---|---|---|
| 1 | OLD 10-044 | 12/11/17 | 3 | - | - |
| 2 | | | 4 | - | - |

M.L. DRAWN BY
12/11/17 DATE
17-272 DRAWING No
SHEET 19 OF 31

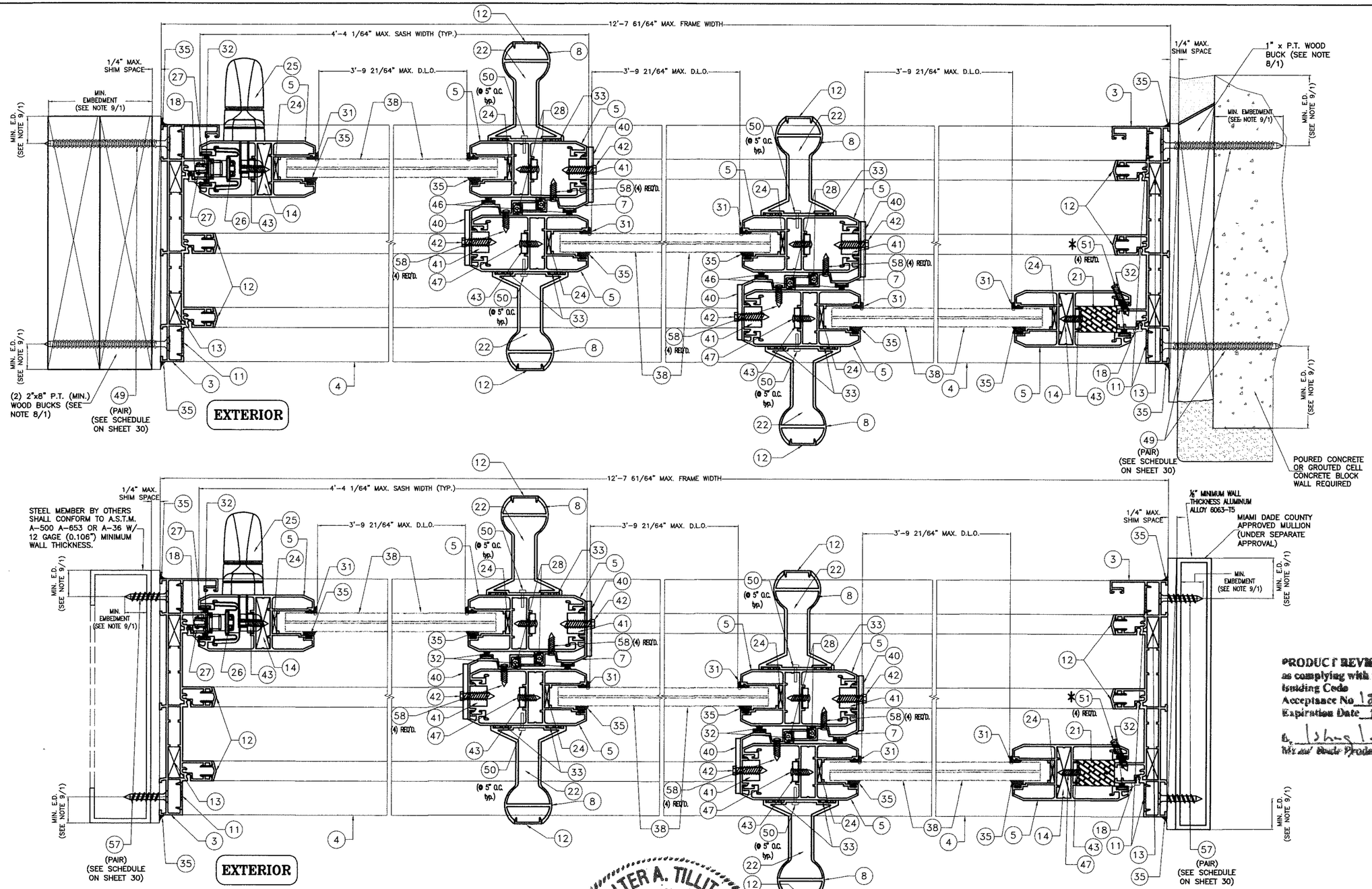


PRODUCT REVIEWED as complying with the Florida Building Code
Acceptance No 18-0117.03
Expiration Date 11/3/23
Miami-Dade Product Control

*LOCATE 51 AT 11 1/4", 36 3/4", 63 1/2" & 89" FROM THE BOTTOM RAIL.

# SECTIONS H-H (XXO)

SCALE: 3/8"=1"

WALTER A. TILLIT JR. LICENSE No. 44167 STATE OF FLORIDA PROFESSIONAL ENGINEER

MIAMI-DADE COUNTY

P.E. SEAL/SIGNATURE/DATE

©2017 TILTECO INC.

TILTECO INC.
TILLIT TESTING & ENGINEERING COMPANY
6355 N.W. 36th. St., Ste. 305, VIRGINIA GARDENS, Fl 33166
Phone : (305)871-1530 . Fax : (305)871-1531
e-mail: tilteco@aol.com
EB-0006719
WALTER A. TILLIT Jr., P.E.
FLORIDA Lic. 44167

FLORIDA BUILDING CODE (High Velocity Hurricane Zone)

SERIES INTER 120, ALUMINUM SLIDING GLASS DOOR SMALL MISSILE IMPACT RESISTANT

MANUFACTURER: ALUCORP S.A. de C.V.
CALLE 2 TAB CAT 17439 INT C x21 Y 25
COL. CHICHI SUAREZ,
MERIDA, YUCATAN, MEXICO
C.P. 97306

DISTRIBUTOR: MIDDKO LLC.
6700 NW 77 CT., SUITE 100
MIAMI, FL. 33166

| REV. NO | DESCRIPTION | DATE | REV. No | DESCRIPTION | DATE |
|---|---|---|---|---|---|
| 1 | OLD 10-044 | 12/11/17 | 3 | - | - |
| 2 | | | 4 | - | - |

M.L.
DRAWN BY

12/11/17
DATE

17-272
DRAWING No

SHEET 20 OF 31

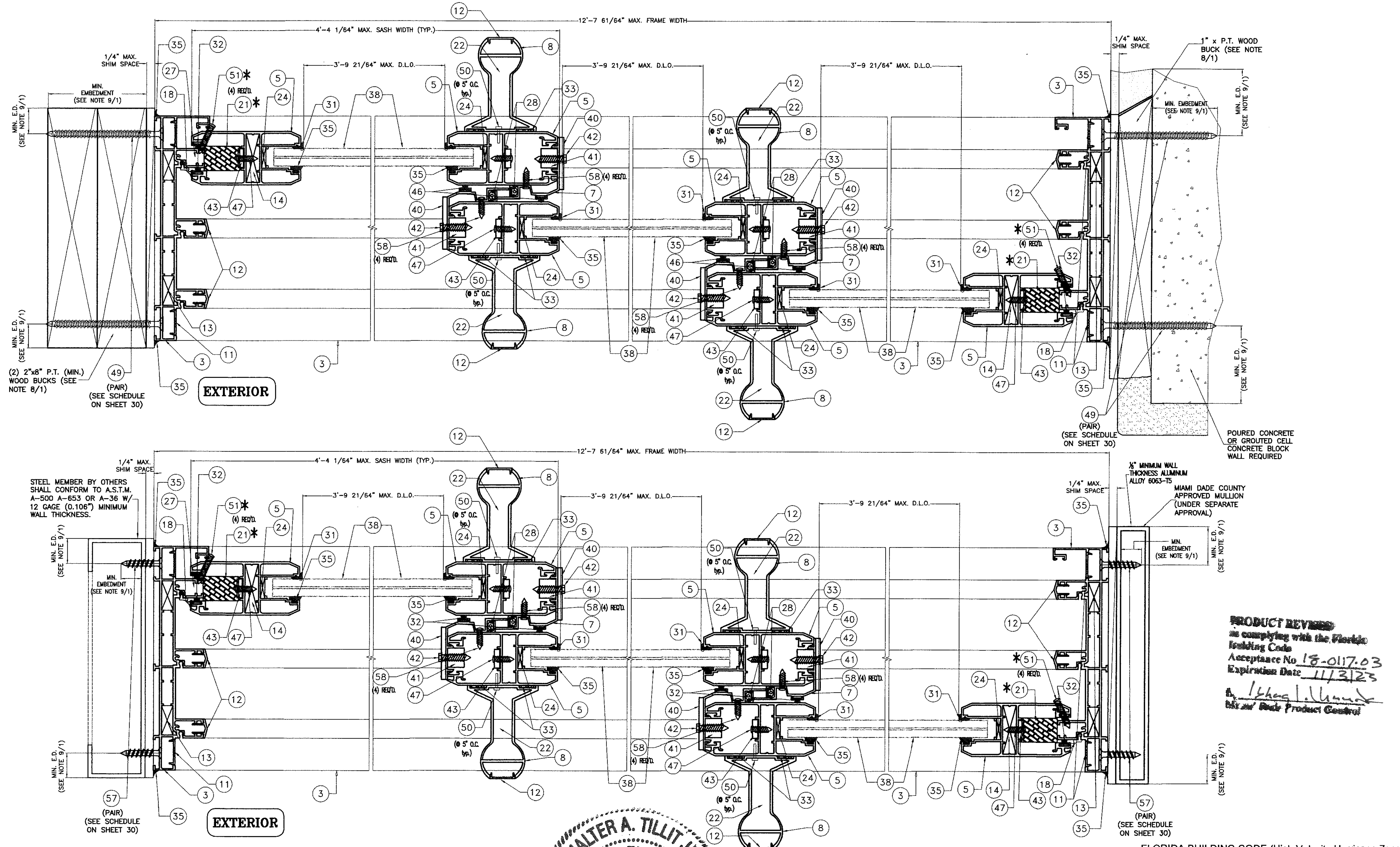


PRODUCT REVISED
as complying with the Florida Building Code
Acceptance No 18-0117.03
Expiration Date 11/3/23
By [signature]
Miami Dade Product Control

FLORIDA BUILDING CODE (High Velocity Hurricane Zone)

*REQUIRED @ FIXED (O) SASHES ONLY. LOCATE (51) AT 11 1/4", 36 3/4", 63 1/2" & 89" FROM THE BOTTOM RAIL.

# SECTIONS I-I (XXO, OXX or XXX)

SCALE: 3/8"=1"

WALTER A. TILLIT JR. LICENSE No. 44167 STATE OF FLORIDA PROFESSIONAL ENGINEER

5/7/18

MIAMI-DADE COUNTY

P.E. SEAL/SIGNATURE/DATE

© 2017 TILTECO INC.

TILTECO INC.
TILLIT TESTING & ENGINEERING COMPANY
6355 N.W. 36th. St., Ste. 305, VIRGINIA GARDENS, Fl 33166
Phone : (305)871-1530 . Fax : (305)871-1531
e-mail: tilteco@aol.com
EB-0006719
WALTER A. TILLIT Jr., P.E.
FLORIDA Lic. 44167

SERIES INTER 120, ALUMINUM SLIDING GLASS DOOR SMALL MISSILE IMPACT RESISTANT

MANUFACTURER:
ALUCORP S.A. de C.V.
CALLE 2 TAB CAT 17439 INT C x21 Y 25
COL. CHICHI SUAREZ, MERIDA, YUCATAN, MEXICO
C.P. 97306

DISTRIBUTOR:
MIDDKO LLC.
6700 NW 77 CT., SUITE 100
MIAMI, FL. 33166

| REV. NO | DESCRIPTION | DATE | REV. No | DESCRIPTION | DATE |
|---|---|---|---|---|---|
| 1 | OLD 10-044 | 12/11/17 | 3 | - | - |
| 2 | | | 4 | - | - |

M.L.
DRAWN BY

12/11/17
DATE

17-272
DRAWING No

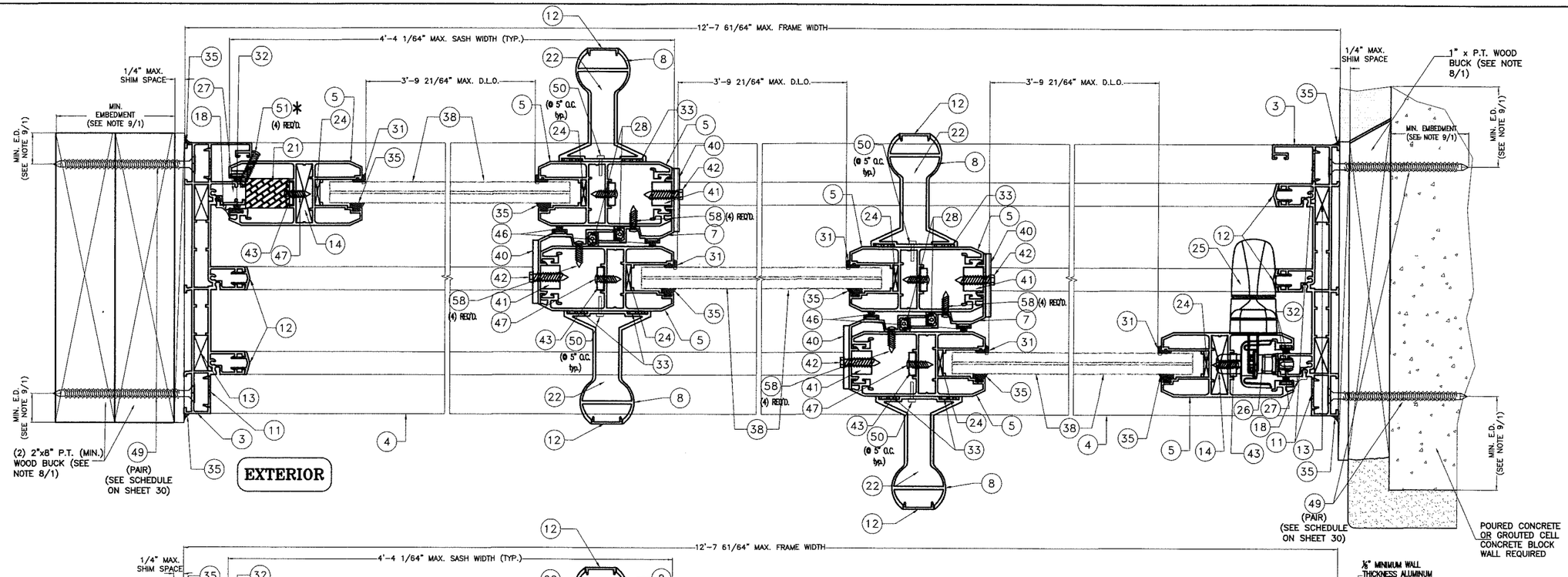


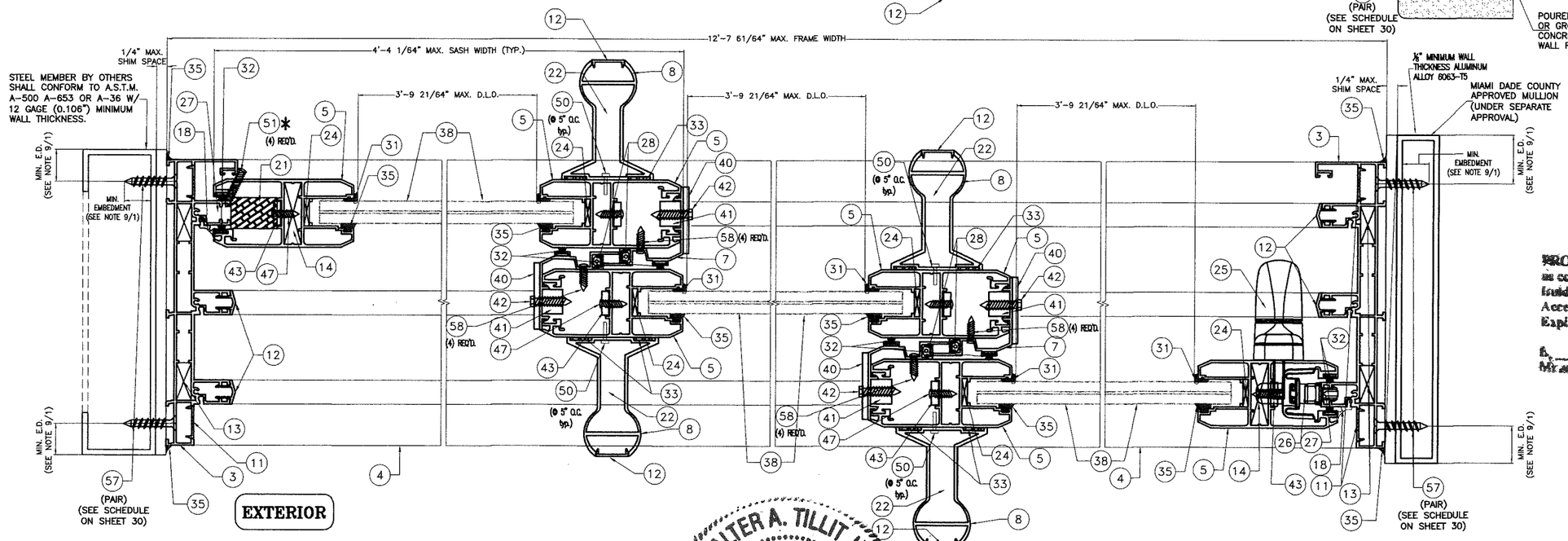


PRODUCT REVIEWED
as complying with the Florida
Building Code
Acceptance No 17-0117.03
Expiration Date 11/3/23
Miami Dade Product Control

FLORIDA BUILDING CODE (High Velocity Hurricane Zone)

*LOCATE (51) AT 11 1/4", 36 3/4", 63 1/2" & 89" FROM THE BOTTOM RAIL.

# SECTIONS J-J (OXX)

SCALE: 3/8"=1"

WALTER A. TILLIT JR. LICENSE No. 44167 STATE OF FLORIDA PROFESSIONAL ENGINEER

MIAMI-DADE COUNTY P.E. SEAL/SIGNATURE/DATE

© 2017 TILTECO INC.

TILTECO INC.
TILLIT TESTING & ENGINEERING COMPANY
6355 N.W. 36th. St., Ste. 305, VIRGINIA GARDENS, Fl 33166
Phone : (305)871-1530 . Fax : (305)871-1531
e-mail: tilteco@aol.com
EB-0006719
WALTER A. TILLIT Jr., P.E.
FLORIDA Lic. 44167

SERIES INTER 120, ALUMINUM SLIDING GLASS DOOR SMALL MISSILE IMPACT RESISTANT

MANUFACTURER:
ALUCORP S.A. de C.V.
CALLE 2 TAB CAT
17439 INT C x21 Y 25
COL. CHICHI SUAREZ,
MERIDA, YUCATAN, MEXICO
C.P. 97306

DISTRIBUTOR:
MIDDKO LLC.
6700 NW 77 CT., SUITE 100
MIAMI, FL. 33166

| REV. NO | DESCRIPTION | DATE | REV. No | DESCRIPTION | DATE |
|---|---|---|---|---|---|
| 1 | OLD 10-044 | 12/11/17 | 3 | - | - |
| 2 | | | 4 | - | - |

M.L.
DRAWN BY

12/11/17
DATE

17-272
DRAWING No

SHEET 22 OF 31

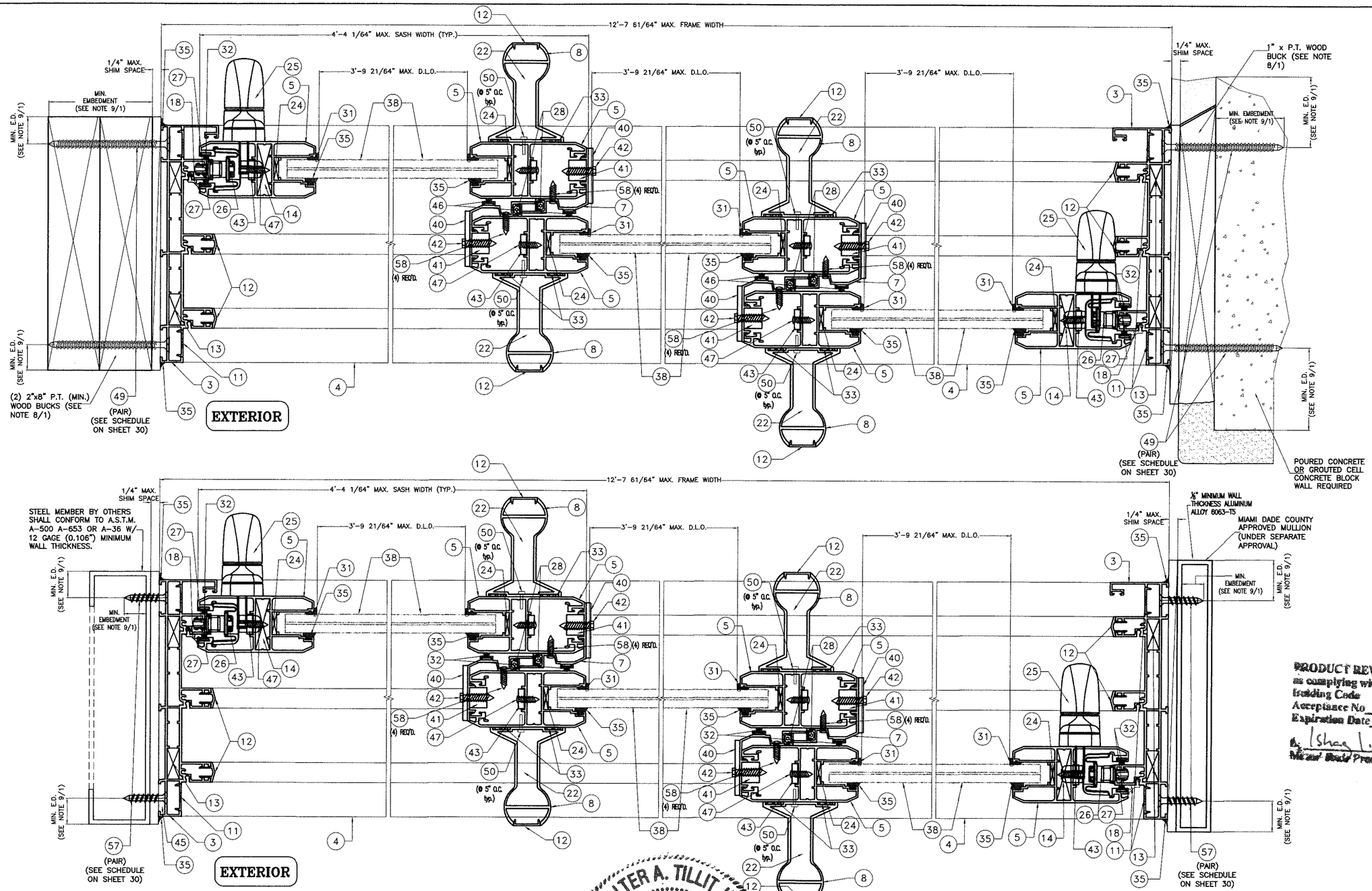





PRODUCT REVIEWED
as complying with the Florida Building Code
Acceptance No 18-0117.03
Expiration Date 11/3/23
Miami-Dade Product Control

FLORIDA BUILDING CODE (High Velocity Hurricane Zone)

# SECTIONS K-K (XXX)

SCALE: 3/8"=1"

WALTER A. TILLIT JR. LICENSE No. 44167 STATE OF FLORIDA PROFESSIONAL ENGINEER

MIAMI-DADE COUNTY

P.E. SEAL/SIGNATURE/DATE

©2017 TILTECO INC.

TILTECO INC.
TILLIT TESTING & ENGINEERING COMPANY
6355 N.W. 36th. St., Ste. 305, VIRGINIA GARDENS, Fl 33166
Phone : (305)871-1530 . Fax : (305)871-1531
e-mail: tilteco@aol.com
EB-0006719
WALTER A. TILLIT Jr., P.E.
FLORIDA Lic. 44167

SERIES INTER 120, ALUMINUM SLIDING GLASS DOOR SMALL MISSILE IMPACT RESISTANT

MANUFACTURER:
ALUCORP S.A. de C.V.
CALLE 2 TAB CAT
17439 INT C x21 Y 25
COL. CHICHI SUAREZ,
MERIDA, YUCATAN, MEXICO
C.P. 97306

DISTRIBUTOR:
MIDDKO LLC.
6700 NW 77 CT., SUITE 100
MIAMI, FL. 33166

| REV. NO | DESCRIPTION | DATE | REV. No | DESCRIPTION | DATE |
|---|---|---|---|---|---|
| 1 | OLD 10-044 | 12/11/17 | 3 | - | - |
| 2 | | | 4 | - | - |

M.L.
DRAWN BY

12/11/17
DATE

17-272
DRAWING No

SHEET 23 OF 31

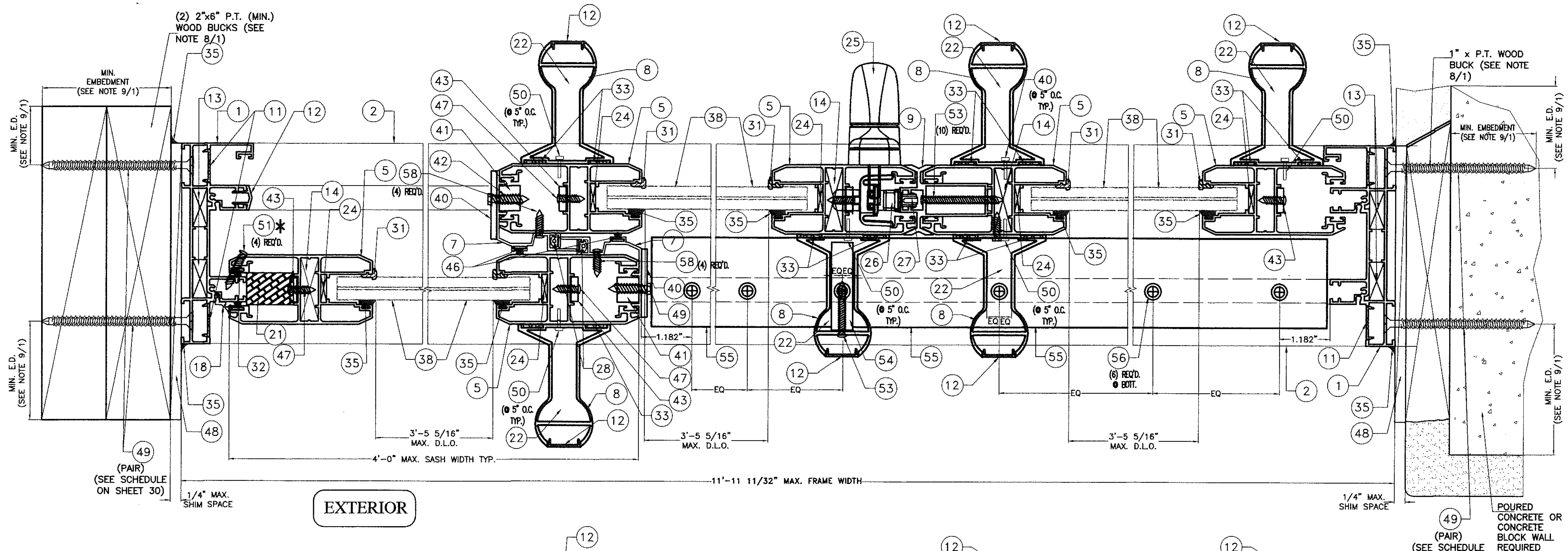


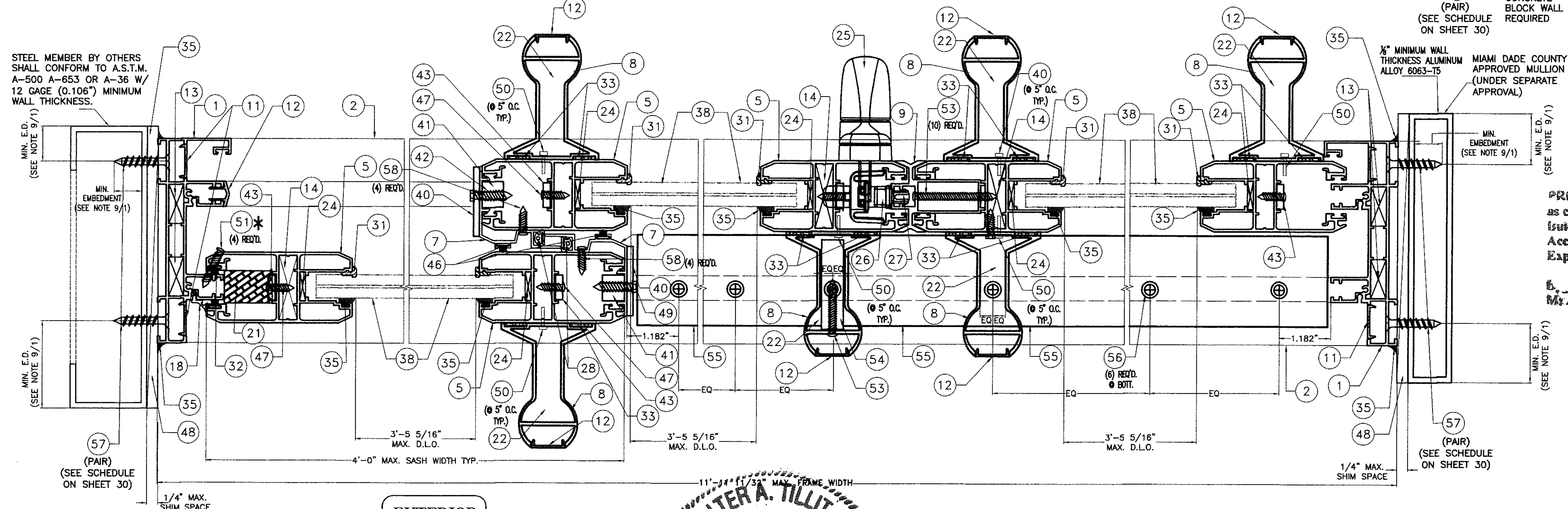


PRODUCT REVISED
as complying with the Florida Building Code
Acceptance No 18-0117.03
Expiration Date 11/3/23
By Ishaq I. Chanda
Miami Dade Product Control

*LOCATE (51) AT 11 1/4", 36 3/4", 63 1/2" & 89" FROM THE BOTTOM RAIL.

# SECTIONS L-L (OXX)

SCALE: 3/8"=1"

FLORIDA BUILDING CODE (High Velocity Hurricane Zone)

WALTER A. TILLIT JR. LICENSE No. 44167 STATE OF FLORIDA PROFESSIONAL ENGINEER

MIAMI-DADE COUNTY | P.E. SEAL/SIGNATURE/DATE

© 2017 TILTECO INC.

TILTECO INC.
TILLIT TESTING & ENGINEERING COMPANY
6355 N.W. 36th. St., Ste. 305, VIRGINIA GARDENS, Fl 33166
Phone : (305)871-1530 . Fax : (305)871-1531
e-mail: tilteco@aol.com
EB-0006719
WALTER A. TILLIT Jr., P.E.
FLORIDA Lic. 44167

SERIES INTER 120, ALUMINUM SLIDING GLASS DOOR SMALL MISSILE IMPACT RESISTANT

| MANUFACTURER: | DISTRIBUTOR: |
|---|---|
| ALUCORP S.A. de C.V. | MIDDKO LLC. |
| CALLE 2 TAB CAT 17439 INT C x21 Y 25 COL. CHICHI SUAREZ, MERIDA, YUCATAN, MEXICO C.P. 97306 | 6700 NW 77 CT., SUITE 100 MIAMI, FL. 33166 |

| REV. NO | DESCRIPTION | DATE | REV. No | DESCRIPTION | DATE |
|---|---|---|---|---|---|
| 1 | OLD 10-044 | 12/11/17 | 3 | – | – |
| 2 | | | 4 | – | – |

M.L.
DRAWN BY

12/11/17
DATE

17-272
DRAWING No

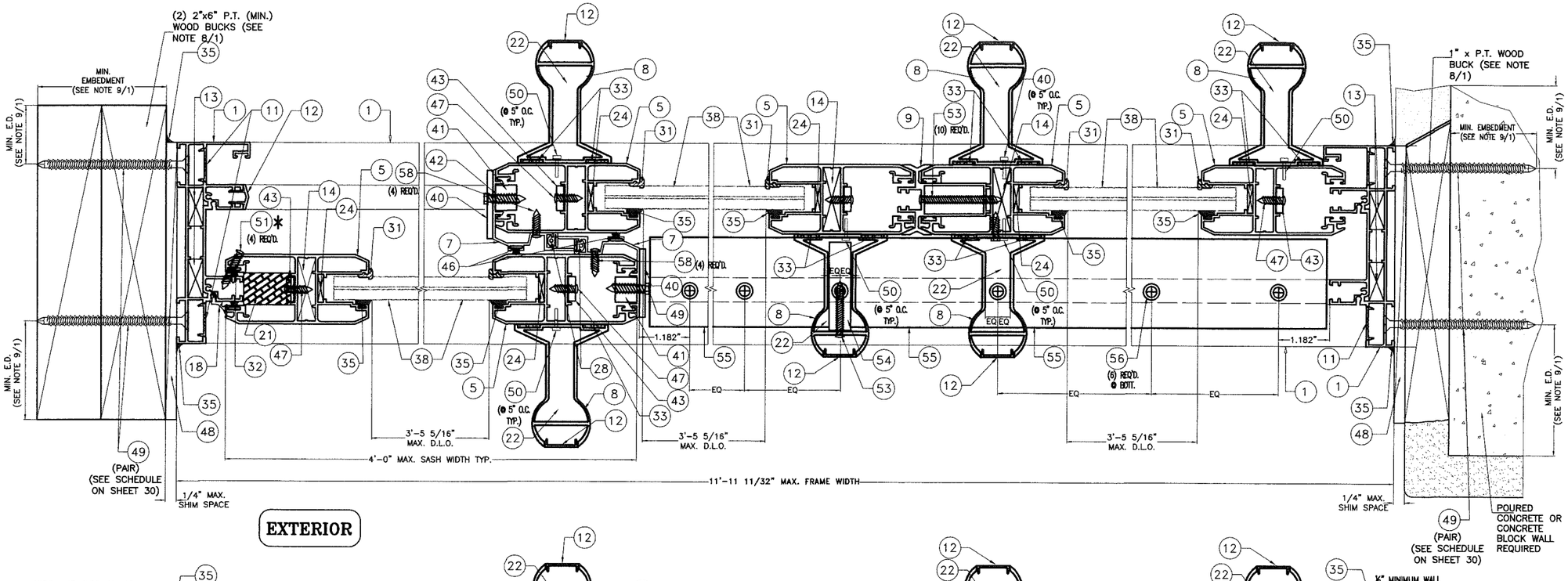


EXTERIOR

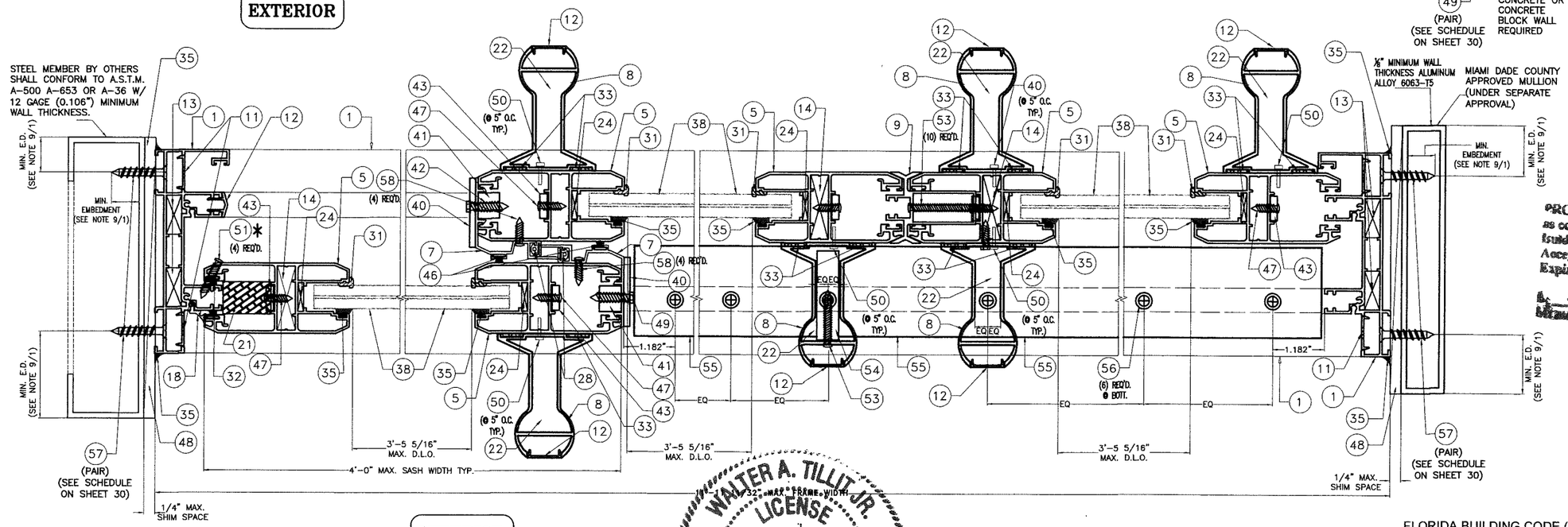


PRODUCT REVIEWED as complying with the Florida Building Code
Acceptance No. FL-0117.03
Expiration Date 11/3/23
Miami-Dade Product Control

EXTERIOR

*LOCATE (51) AT 11 1/4", 36 3/4", 63 1/2" & 89" FROM THE BOTTOM RAIL.

# SECTIONS M-M (0XX)

SCALE: 3/8"=1"

WALTER A. TILLIT JR. LICENSE No. 44167 STATE OF FLORIDA PROFESSIONAL ENGINEER

MIAMI-DADE COUNTY | P.E. SEAL/SIGNATURE/DATE

©2017 TILTECO INC.

TILTECO INC.
TILLIT TESTING & ENGINEERING COMPANY
6355 N.W. 36th. St., Ste. 305, VIRGINIA GARDENS, Fl 33166
Phone : (305)871-1530 . Fax : (305)871-1531
e-mail: tilteco@aol.com
EB-0006719
WALTER A. TILLIT Jr., P.E.
FLORIDA Lic. 44167

FLORIDA BUILDING CODE (High Velocity Hurricane Zone)

SERIES INTER 120, ALUMINUM SLIDING GLASS DOOR SMALL MISSILE IMPACT RESISTANT

MANUFACTURER: ALUCORP S.A. de C.V.
CALLE 2 TAB CAT 17439 INT C x21 Y 25
COL. CHICHI SUAREZ,
MERIDA, YUCATAN, MEXICO
C.P. 97306

DISTRIBUTOR: MIDDKO LLC.
6700 NW 77 CT., SUITE 100
MIAMI, FL. 33166

| REV. NO | DESCRIPTION | DATE | REV. No | DESCRIPTION | DATE |
|---|---|---|---|---|---|
| 1 | OLD 10-044 | 12/11/17 | 3 | – | – |
| 2 | | | 4 | – | – |

M.L. DRAWN BY

12/11/17 DATE

17-272 DRAWING No

SHEET 25 OF 31

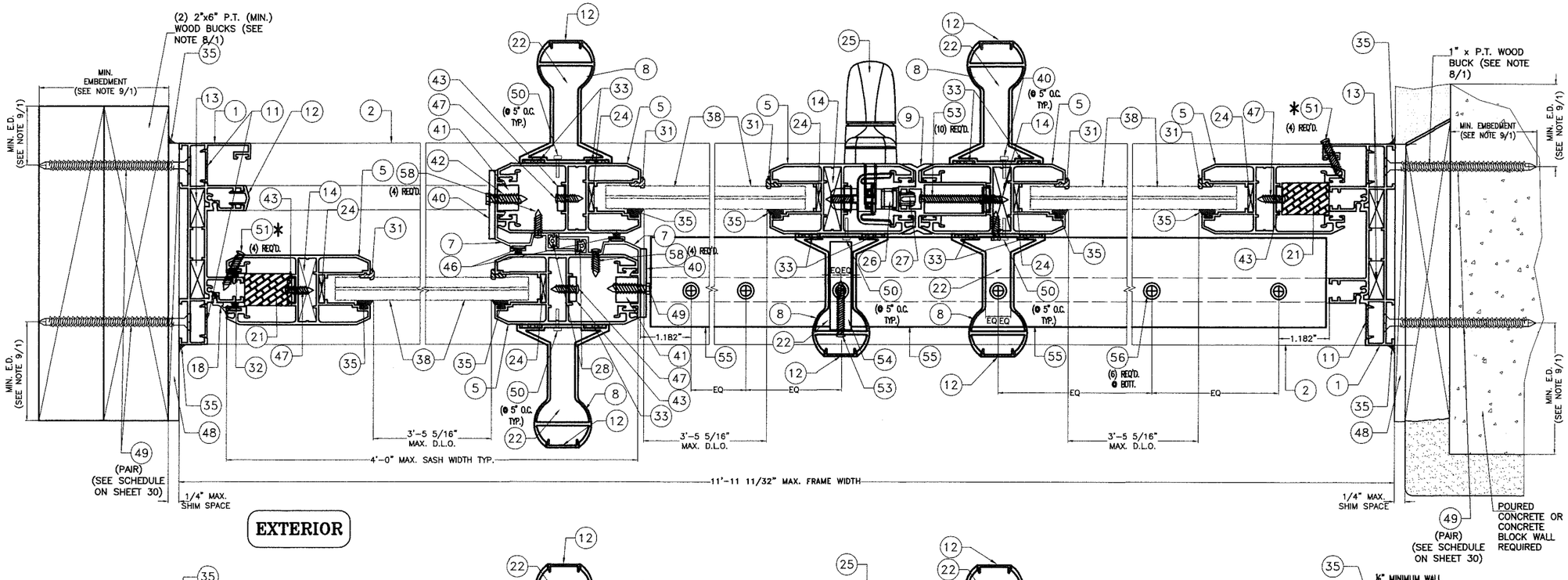


EXTERIOR

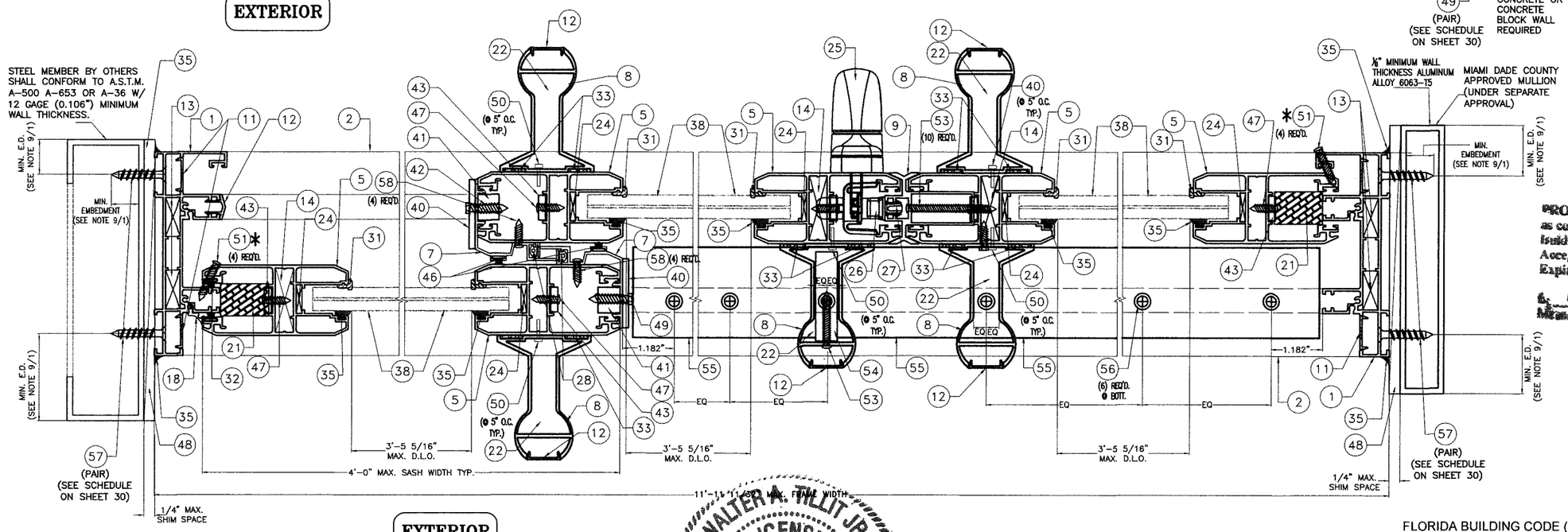


EXTERIOR

PRODUCT REVISED
as complying with the Florida Building Code
Acceptance No 18-0117.03
Expiration Date 11/3/23
Miami-Dade Product Control

FLORIDA BUILDING CODE (High Velocity Hurricane Zone)

*LOCATE (51) AT 11 1/4", 36 3/4", 63 1/2" & 89" FROM THE BOTTOM RAIL.

# SECTIONS N–N (OXO)

SCALE: 3/8"=1"

WALTER A. TILLIT JR. LICENSE No. 44167 STATE OF FLORIDA PROFESSIONAL ENGINEER

MIAMI-DADE COUNTY P.E. SEAL/SIGNATURE/DATE

©2017 TILTECO INC.

TILTECO INC.
TILLIT TESTING & ENGINEERING COMPANY
6355 N.W. 36th. St., Ste. 305, VIRGINIA GARDENS, Fl 33166
Phone : (305)871-1530 . Fax : (305)871-1531
e-mail: tilteco@aol.com
EB-0006719
WALTER A. TILLIT Jr., P.E.
FLORIDA Lic. 44167

SERIES INTER 120, ALUMINUM SLIDING GLASS DOOR SMALL MISSILE IMPACT RESISTANT

MANUFACTURER: ALUCORP S.A. de C.V.
CALLE 2 TAB CAT 17439 INT C x21 Y 25 COL. CHICHI SUAREZ, MERIDA, YUCATAN, MEXICO C.P. 97306

DISTRIBUTOR: MIDDKO LLC.
6700 NW 77 CT., SUITE 100 MIAMI, FL. 33166

| REV. NO | DESCRIPTION | DATE | REV. No | DESCRIPTION | DATE |
|---|---|---|---|---|---|
| 1 | OLD 10-044 | 12/11/17 | 3 | – | – |
| 2 | | | 4 | – | – |

| | |
|---|---|
| M.L. DRAWN BY | |
| 12/11/17 DATE | |
| 17-272 DRAWING No | |
| SHEET 26 OF 31 | |

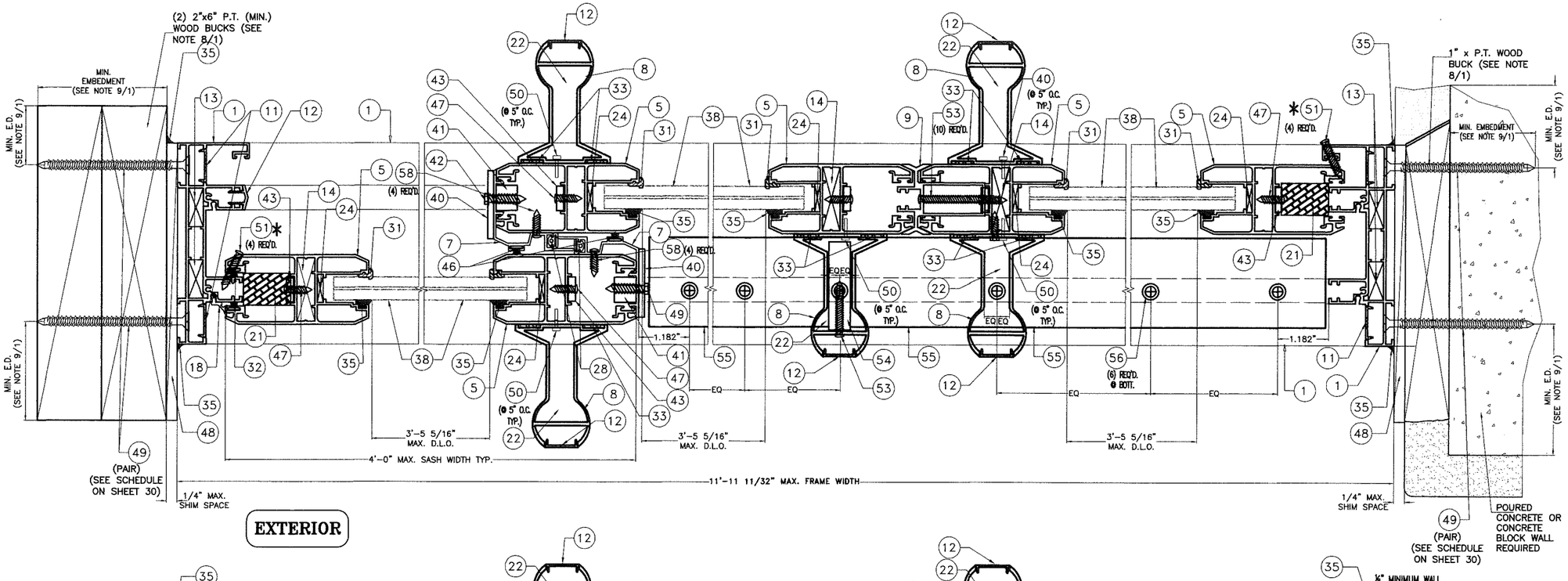


EXTERIOR

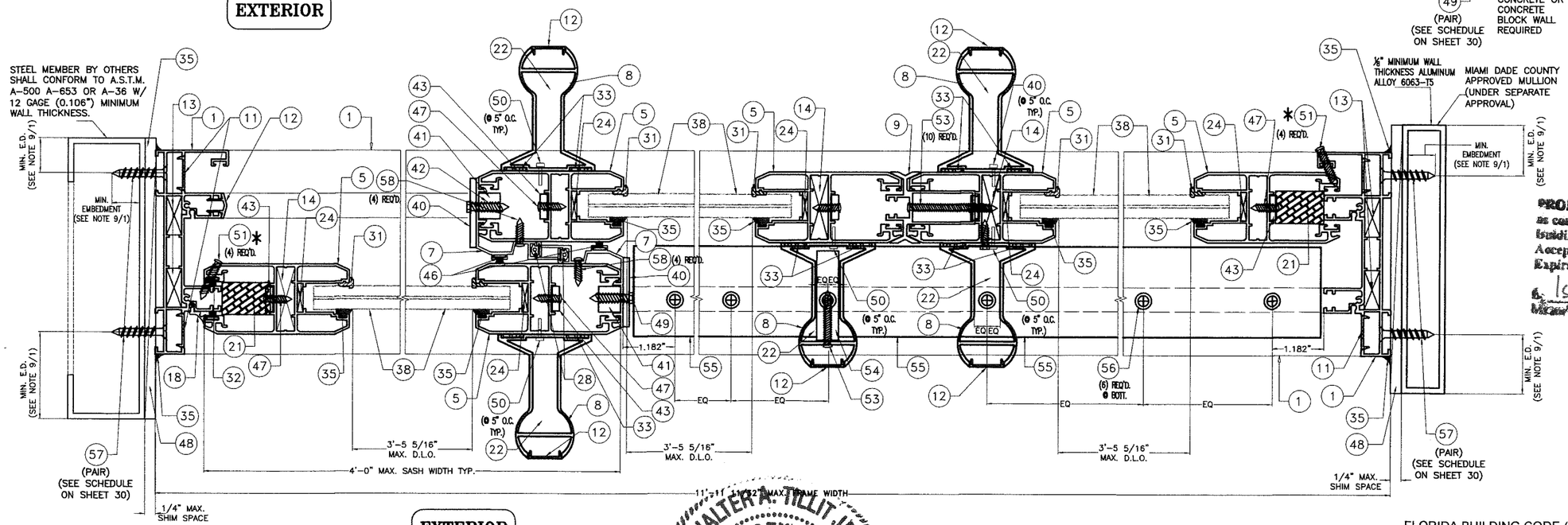


EXTERIOR

PRODUCT REVISED
as complying with the Florida Building Code
Acceptance No 18-0117.02
Expiration Date 11/3/23
Miami-Dade Product Control

*LOCATE (51) AT 11 1/4", 36 3/4", 63 1/2" & 89" FROM THE BOTTOM RAIL.

# SECTIONS 0-0 (0X0)

SCALE: 3/8"=1"

WALTER A. TILLIT JR. LICENSE No. 44167 STATE OF FLORIDA PROFESSIONAL ENGINEER

MIAMI-DADE COUNTY P.E. SEAL/SIGNATURE/DATE

©2017 TILTECO INC.

TILTECO INC.
TILLIT TESTING & ENGINEERING COMPANY
6355 N.W. 36th. St., Ste. 305, VIRGINIA GARDENS, Fl 33166
Phone : (305)871-1530 . Fax : (305)871-1531
e-mail: tilteco@aol.com
EB-0006719
WALTER A. TILLIT Jr., P.E.
FLORIDA Lic. 44167

FLORIDA BUILDING CODE (High Velocity Hurricane Zone)

SERIES INTER 120, ALUMINUM SLIDING GLASS DOOR SMALL MISSILE IMPACT RESISTANT

MANUFACTURER: ALUCORP S.A. de C.V.
CALLE 2 TAB CAT 17439 INT C x21 Y 25
COL. CHICHI SUAREZ,
MERIDA, YUCATAN, MEXICO
C.P. 97306

DISTRIBUTOR: MIDDKO LLC.
6700 NW 77 CT., SUITE 100
MIAMI, FL. 33166

| REV. NO | DESCRIPTION | DATE | REV. No | DESCRIPTION | DATE |
|---|---|---|---|---|---|
| 1 | OLD 10-044 | 12/11/17 | 3 | – | – |
| 2 | | | 4 | – | – |

M.L. DRAWN BY

12/11/17 DATE

17-272 DRAWING No

SHEET 27 OF 31

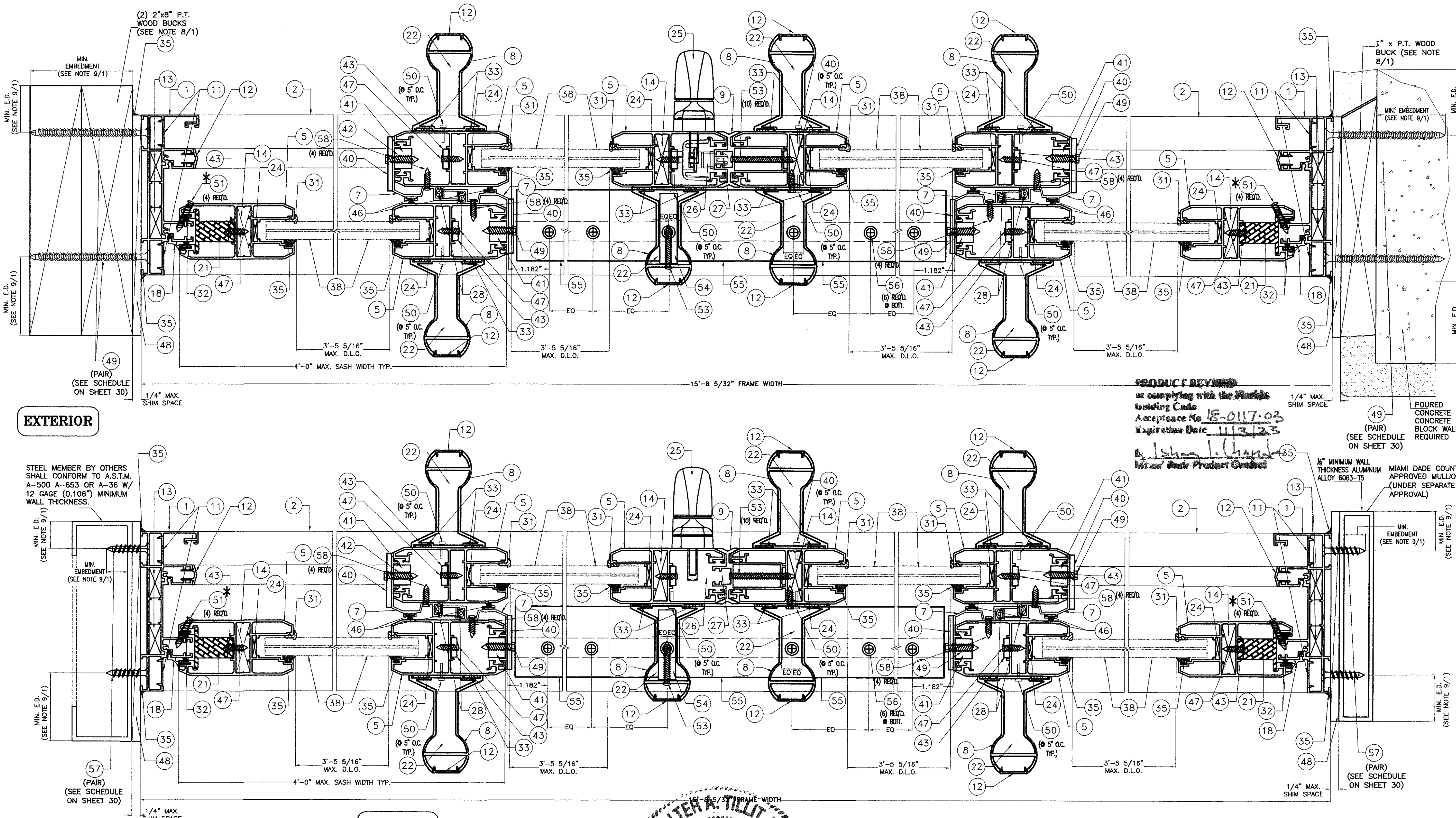


*LOCATE (51) AT 11 1/4", 36 3/4", 63 1/2" & 89" FROM THE BOTTOM RAIL.

# SECTIONS P-P (OXXO)

SCALE: 3/8"=1"

FLORIDA BUILDING CODE (High Velocity Hurricane Zone)

WALTER A. TILLIT JR. LICENSE No. 44167 STATE OF FLORIDA PROFESSIONAL ENGINEER

| MIAMI-DADE COUNTY | P.E. SEAL/SIGNATURE/DATE |
|---|---|

© 2017 TILTECO INC.

TILTECO INC.
TILLIT TESTING & ENGINEERING COMPANY
6355 N.W. 36th. St., Ste. 305, VIRGINIA GARDENS, Fl 33166
Phone : (305)871-1530 . Fax : (305)871-1531
e-mail: tilteco@aol.com
EB-0006719
WALTER A. TILLIT Jr., P.E.
FLORIDA Lic. 44167

SERIES INTER 120, ALUMINUM SLIDING GLASS DOOR SMALL MISSILE IMPACT RESISTANT

| MANUFACTURER: | DISTRIBUTOR: |
|---|---|
| ALUCORP S.A. de C.V.<br>CALLE 2 TAB CAT 17439 INT C x21 Y 25 COL. CHICHI SUAREZ, MERIDA, YUCATAN, MEXICO C.P. 97306 | MIDDKO LLC.<br>6700 NW 77 CT., SUITE 100 MIAMI, FL. 33166 |

| REV. NO | DESCRIPTION | DATE | REV. No | DESCRIPTION | DATE |
|---|---|---|---|---|---|
| 1 | OLD 10-044 | 12/11/17 | 3 | – | – |
| 2 | | | 4 | – | – |

M.L. DRAWN BY

12/11/17 DATE

17-272 DRAWING No

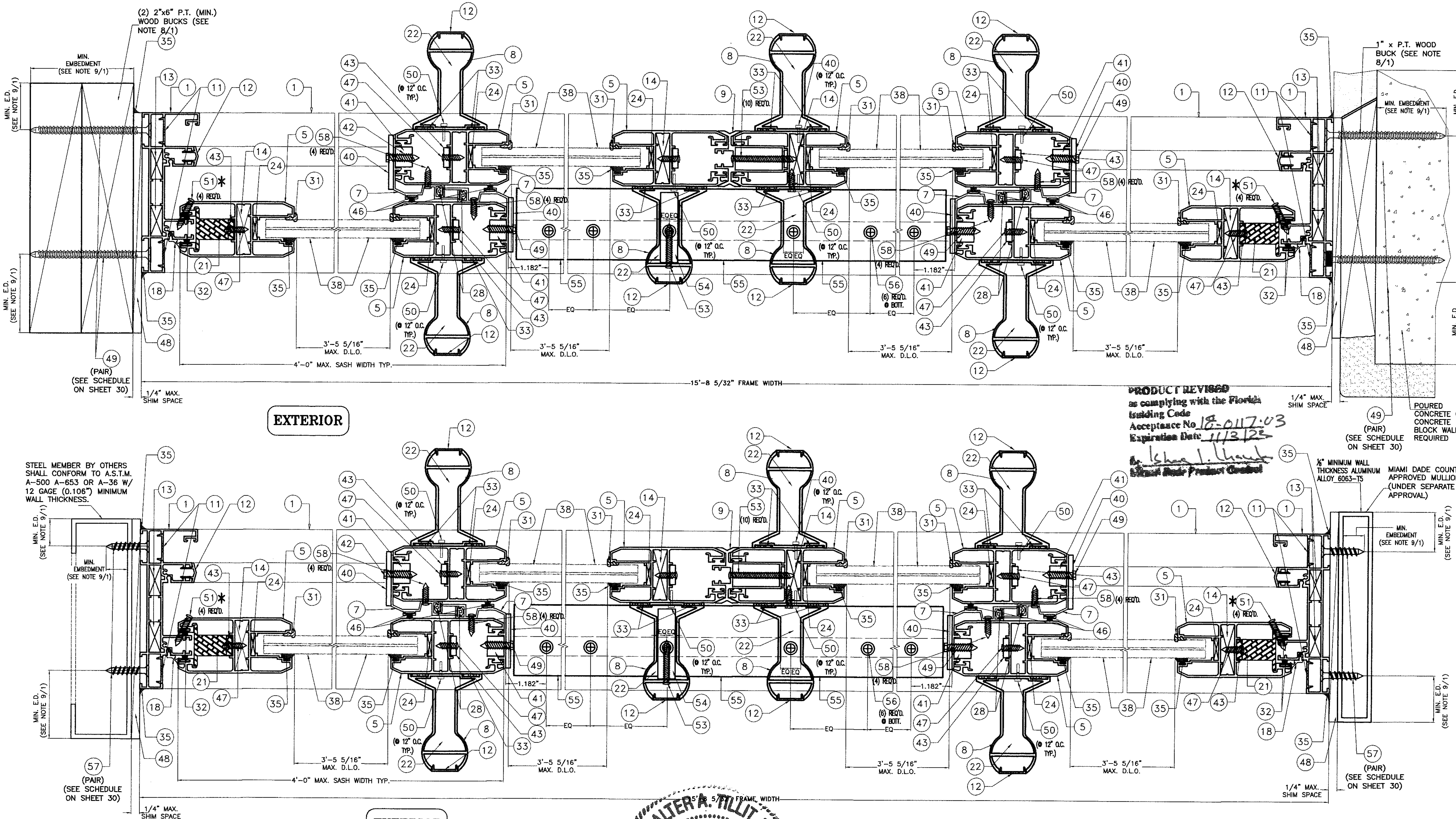


FLORIDA BUILDING CODE (High Velocity Hurricane Zone)

*LOCATE (51) AT 11 1/4", 36 3/4", 63 1/2" & 89" FROM THE BOTTOM RAIL.

# SECTIONS Q-Q (OXXO)

SCALE: 3/8"=1"

WALTER A. TILLIT JR. LICENSE No. 44167 STATE OF FLORIDA PROFESSIONAL ENGINEER

MIAMI-DADE COUNTY | P.E. SEAL/SIGNATURE/DATE

© 2017 TILTECO INC.

TILTECO INC.

TILLIT TESTING & ENGINEERING COMPANY

6355 N.W. 36th. St., Ste. 305, VIRGINIA GARDENS, Fl 33166
Phone : (305)871-1530 . Fax : (305)871-1531
e-mail: tilteco@aol.com
EB-0006719
WALTER A. TILLIT Jr., P.E.
FLORIDA Lic. 44167

SERIES INTER 120, ALUMINUM SLIDING GLASS DOOR SMALL MISSILE IMPACT RESISTANT

MANUFACTURER: ALUCORP S.A. de C.V. CALLE 2 TAB CAT 17439 INT C x21 Y 25 COL. CHICHI SUAREZ, MERIDA, YUCATAN, MEXICO C.P. 97306

DISTRIBUTOR: MIDDKO LLC. 6700 NW 77 CT., SUITE 100 MIAMI, FL. 33166

| REV. NO | DESCRIPTION | DATE | REV. No | DESCRIPTION | DATE |
|---|---|---|---|---|---|
| 1 | OLD 10-044 | 12/11/17 | 3 | – | – |
| 2 | M.D.C COMMENTS | 3/22/18 | 4 | – | – |

M.L. DRAWN BY

12/11/17 DATE

17-272 DRAWING No

SHEET 29 OF 31

# MAXIMUM ANCHOR SPACING SCHEDULE "S"

| SUBSTRATE (*) | ANCHOR TYPE (*) | A.S.D. DESIGN PRESSURE RATING | HEAD/SILL @ CONFIGURATIONS: XO, OX OR XX (SEE ELEV. ON SHEET 6) | HEAD/SILL @ CONFIGURATIONS: XXO, OXX OR XXX (SEE ELEV. ON SHEET 7 TO 9) | HEAD/SILL @ CONFIGURATIONS: OXX, OXO OR OXXO (SEE ELEV. ON SHEET 10 TO 12) | JAMBS | REQ'D. ADDITIONAL CLUSTER OF PAIRS OF (12) ANCHORS @ MEETING RAIL OR LOCKSTILES |
|---|---|---|---|---|---|---|---|
| CONCRETE | 1/4" Ø ULTRACON | ± 80 OR LESS | 7" O.C. | 8" O.C. | 4" O.C. | 12" O.C. | SEE DETAIL 1 (24 ANCHORS) (TOP & BOTTOM.) |
| BLOCK | 1/4" Ø ULTRACON | ± 80 OR LESS | N/A | N/A | N/A | 12" O.C. | SEE DETAIL 1 (24 ANCHORS) (TOP & BOTTOM.) |
| WOOD | 1/4" Ø ULTRACON | ± 80 OR LESS | 7" O.C. | 8" O.C. | 4" O.C. | 12" O.C. | SEE DETAIL 1 (24 ANCHORS) (TOP & BOTTOM.) |
| ALUM. TUBE OR STEEL MEMBER | 1/4" Ø TECK SCREW | ± 80 OR LESS | 7" O.C. | 8" O.C. | 4" O.C. | 12" O.C. | SEE DETAIL 1 (24 ANCHORS) (TOP & BOTTOM.) |

(*) SEE GENERAL NOTE 9/1.

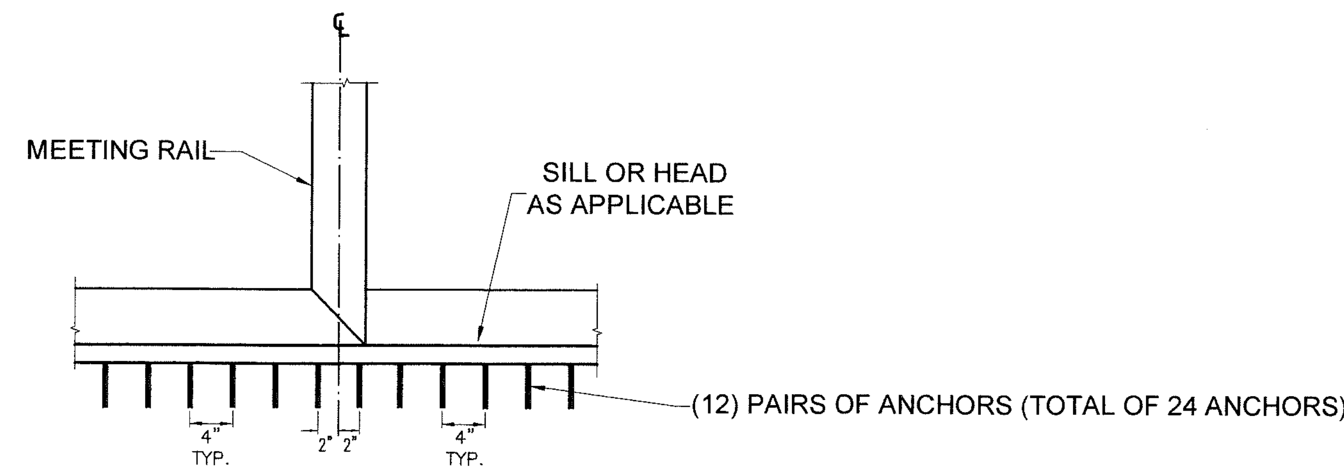


## DETAIL 1 @ MEETING RAIL OR LOCKSTILES

CLUSTER OF 12 PAIRS OF ANCHORS TYP.
TOP/BOTTOM
N.T.S.

PRODUCT REVISED
as complying with the Florida Building Code
Acceptance No 18-0117.03
Expiration Date 11/3/23
By Ishag I. Chanda
Miami-Dade Product Control

WALTER A. TILLIT JR.
LICENSE
No. 44167
STATE OF FLORIDA
PROFESSIONAL ENGINEER
6/5/18

MIAMI-DADE COUNTY

P.E. SEAL/SIGNATURE/DATE

FLORIDA BUILDING CODE (High Velocity Hurricane Zone)

©2017 TILTECO INC.

TILTECO INC.
TILLIT TESTING & ENGINEERING COMPANY
6355 N.W. 36th. St., Ste. 305, VIRGINIA GARDENS, Fl 33166
Phone : (305)871-1530 . Fax : (305)871-1531
e-mail: tilteco@aol.com
EB-0006719
WALTER A. TILLIT Jr., P.E.
FLORIDA Lic. 44167

SERIES INTER 120, ALUMINUM SLIDING GLASS DOOR SMALL MISSILE IMPACT RESISTANT

MANUFACTURER:
ALUCORP S.A. de C.V.
CALLE 2 TAB CAT 17439 INT C x21 Y 25
COL. CHICHI SUAREZ,
MERIDA, YUCATAN, MEXICO
C.P. 97306

DISTRIBUTOR:
MIDDKO LLC.
6700 NW 77 CT., SUITE 100
MIAMI, FL. 33166

| REV. NO | DESCRIPTION | DATE | REV. No | DESCRIPTION | DATE |
|---|---|---|---|---|---|
| 1 | OLD 10-044 | 12/11/17 | 3 | - | - |
| 2 | M.D.C COMMENTS | 3/22/18 | 4 | - | - |

M.L.
DRAWN BY

12/11/17
DATE

17-272
DRAWING No

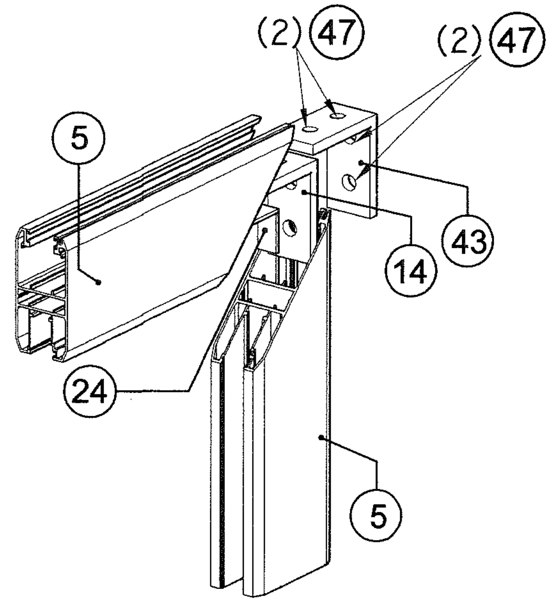


SASH TOP CORNER

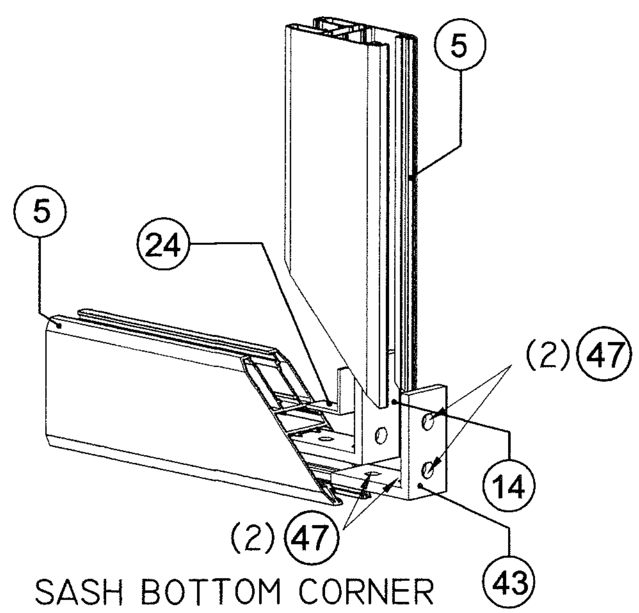


SASH BOTTOM CORNER

## SASH CONNECTION

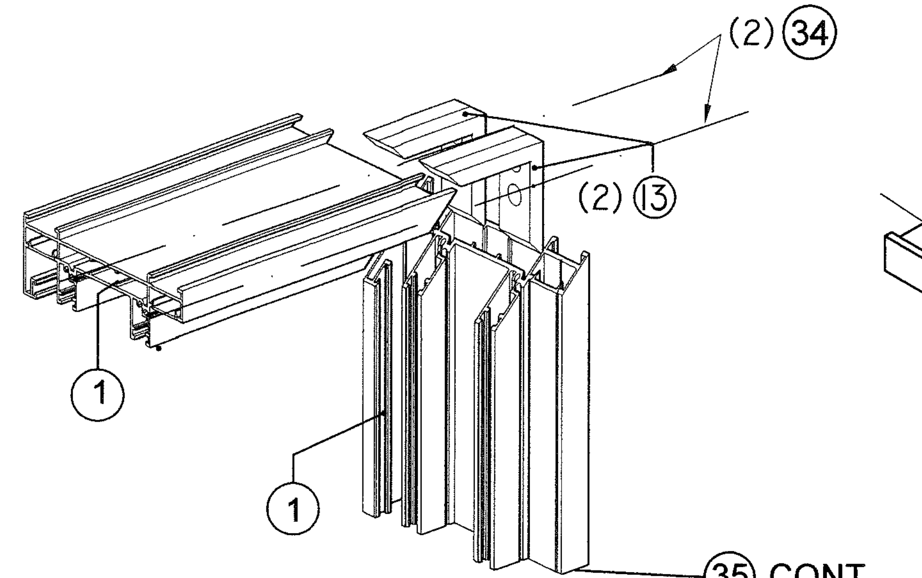


FRAME TOP CORNER

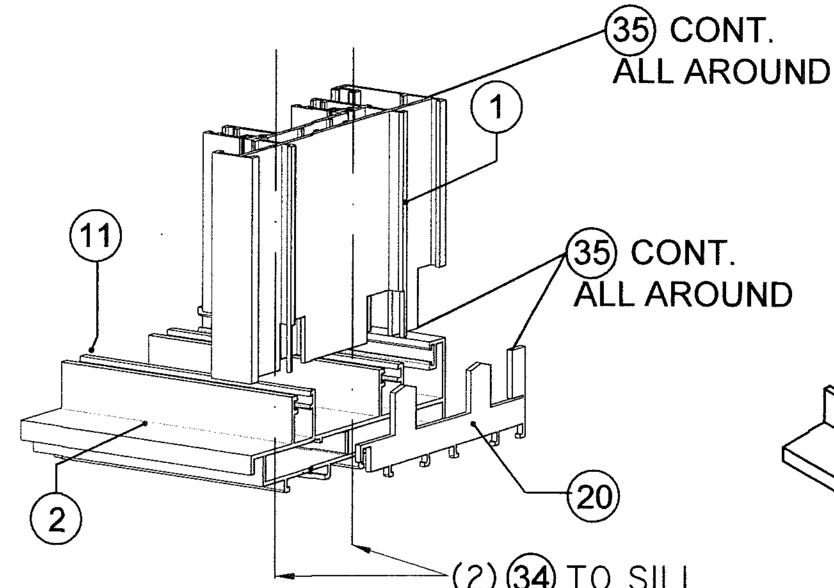


FRAME BOTTOM CORNER

## CORNER CONNECTION
(2 TRACKS APPLICATION)

PRODUCT REVISED as complying with the Florida Building Code
Acceptance No 18-0117.03
Expiration Date Nov 03, 2023
By [signature]
Miami Dade Product Control

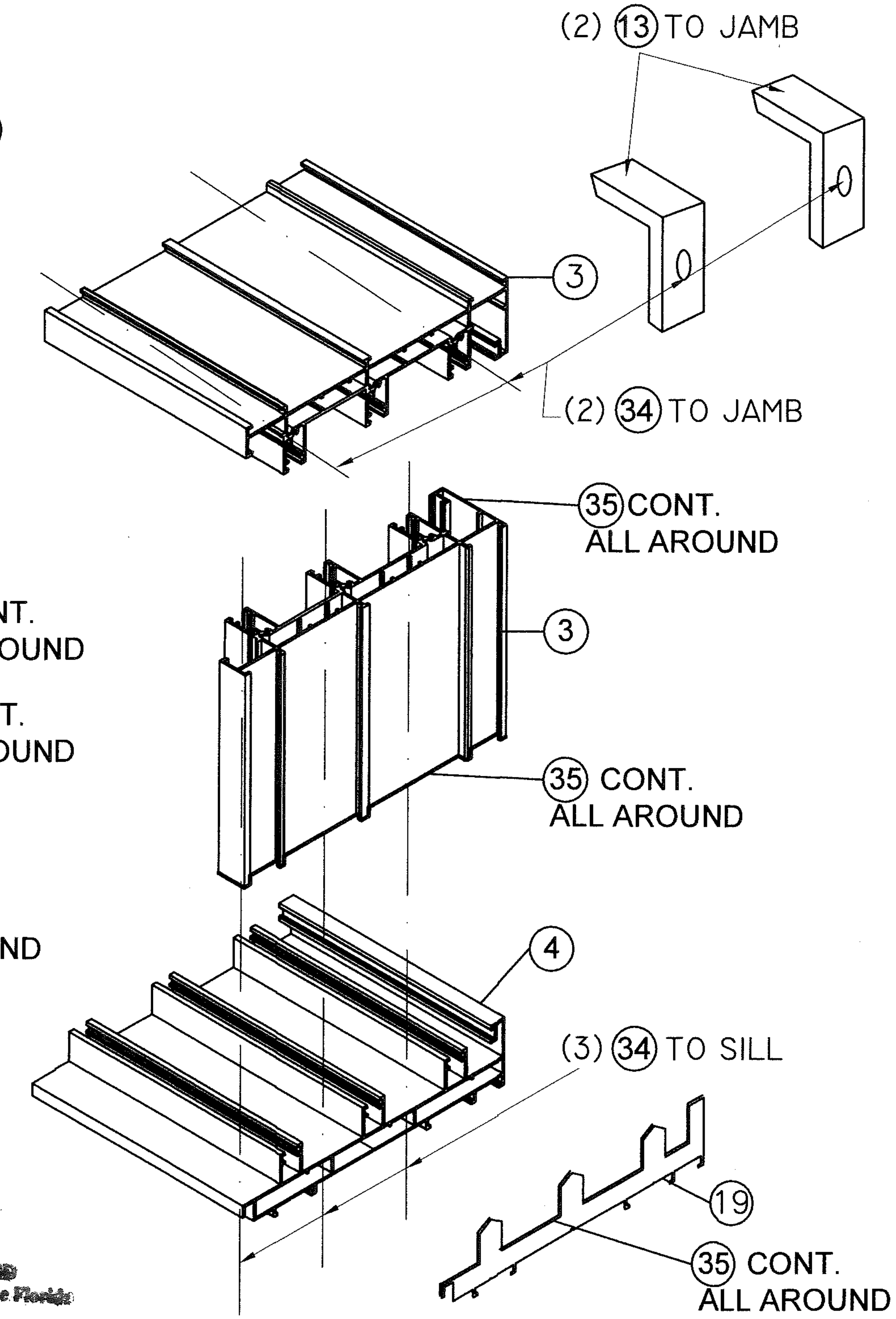


## CORNER CONNECTION
(3 TRACKS APPLICATION)

FLORIDA BUILDING CODE (High Velocity Hurricane Zone)

WALTER A. TILLIT JR. LICENSE No. 44167 STATE OF FLORIDA PROFESSIONAL ENGINEER

| MIAMI-DADE COUNTY | P.E. SEAL/SIGNATURE/DATE |
|---|---|

© 2017 TILTECO INC.

TILTECO INC.
TILLIT TESTING & ENGINEERING COMPANY
6355 N.W. 36th. St., Ste. 305, VIRGINIA GARDENS, Fl 33166
Phone : (305)871-1530 . Fax : (305)871-1531
e-mail: tilteco@aol.com
EB-0006719
WALTER A. TILLIT Jr., P.E.
FLORIDA Lic. 44167

SERIES INTER 120, ALUMINUM SLIDING GLASS DOOR SMALL MISSILE IMPACT RESISTANT

MANUFACTURER: ALUCORP S.A. de C.V. CALLE 2 TAB CAT 17439 INT C x21 Y 25 COL. CHICHI SUAREZ, MERIDA, YUCATAN, MEXICO C.P. 97306

DISTRIBUTOR: MIDDKO LLC. 6700 NW 77 CT., SUITE 100 MIAMI, FL. 33166

| REV. NO | DESCRIPTION | DATE | REV. No | DESCRIPTION | DATE |
|---|---|---|---|---|---|
| 1 | OLD 10-044 | 12/11/17 | 3 | - | - |
| 2 | | | 4 | - | - |

M.L. DRAWN BY
12/11/17 DATE
17-272 DRAWING No
SHEET 31 OF 31