MIAMI-DADE COUNTY
DEPARTMENT OF REGULATORY AND ECONOMIC RESOURCES (RER)
BOARD AND CODE ADMINISTRATION DIVISION

MIAMI-DADE COUNTY
PRODUCT CONTROL SECTION
11805 SW 26 Street, Room 208
T (786) 315-2590 F (786) 315-2599
www.miamidade.gov/economy

NOTICE OF ACCEPTANCE (NOA)

Regency Plus, Inc.
2000 Locust Gap Highway
Mount Carmel, PA 17851

SCOPE:

This NOA is being issued under the applicable rules and regulations governing the use of construction materials. The documentation submitted has been reviewed and accepted by Miami-Dade County RER-Product Control Section to be used in Miami-Dade County and other areas where allowed by the Authority Having Jurisdiction (AHJ).

This NOA shall not be valid after the expiration date stated below. The Miami-Dade County Product Control Section (In Miami-Dade County) and/ or the AHJ (in areas other than Miami-Dade County) reserve the right to have this product or material tested for quality assurance purposes. If this product or material fails to perform in the accepted manner, the manufacturer will incur the expense of such testing and the AHJ may immediately revoke, modify, or suspend the use of such product or material within their jurisdiction. RER reserves the right to revoke this acceptance, if it is determined by Miami-Dade County Product Control Section that this product or material fails to meet the requirements of the applicable building code.

This product is approved as described herein, and has been designed to comply with the Florida Building Code, including the High Velocity Hurricane Zone.

DESCRIPTION: Series "5405" White PVC Horizontal Sliding Window - L.M.I.

APPROVAL DOCUMENT: Drawing No. **RPLS0063**, titled "Impact Series 5405 Horizontal Slider Window", sheets 1 through 6 of 6, dated 11/26/08, with revision **J** dated 01/08/18, prepared by PTC Product Design Group, LLC, signed and sealed by Robert J. Amoruso, P.E., bearing the Miami-Dade County Product Control Revision stamp with the Notice of Acceptance number and expiration date by the Miami-Dade County Product Control Section.

MISSILE IMPACT RATING: Large and Small Missile Impact Resistant

LABELING: Each unit shall bear a permanent label with the manufacturer's name or logo, city, state, series, and following statement: "Miami-Dade County Product Control Approved", unless otherwise noted herein.

RENEWAL of this NOA shall be considered after a renewal application has been filed and there has been no change in the applicable building code negatively affecting the performance of this product.

TERMINATION of this NOA will occur after the expiration date or if there has been a revision or change in the materials, use, and/ or manufacture of the product or process. Misuse of this NOA as an endorsement of any product, for sales, advertising or any other purposes shall automatically terminate this NOA. Failure to comply with any section of this NOA shall be cause for termination and removal of NOA.

ADVERTISEMENT: The NOA number preceded by the words Miami-Dade County, Florida, and followed by the expiration date may be displayed in advertising literature. If any portion of the NOA is displayed, then it shall be done in its entirety.

INSPECTION: A copy of this entire NOA shall be provided to the user by the manufacturer or its distributors and shall be available for inspection at the job site at the request of the Building Official.

This NOA **revises NOA No. 15-0618.03** and consists of this page 1 and evidence pages E-1, E-2 and E-3, as well as approval document mentioned above.

The submitted documentation was reviewed by **Manuel Perez, P.E.**

MIAMI-DADE COUNTY APPROVED

3/1/18

NOA No. 18-0122.12
Expiration Date: July 22, 2019
Approval Date: March 08, 2018

Regency Plus, Inc.

NOTICE OF ACCEPTANCE: EVIDENCE SUBMITTED

1. EVIDENCE SUBMITTED UNDER PREVIOUS NOA's

A. DRAWINGS

1. Manufacturer's die drawings and sections.
   (Submitted under NOA No. 08-1210.12)
2. Drawing No. **RPLS0063**, Sheets 1 through 6 of 6, titled "Impact Series 5405 Horizontal Slider Window", dated 11/26/08, with revision **H** dated 09/24/15, prepared by PTC Product Design Group, LLC, signed and sealed by Robert J. Amoruso, P.E.

B. TESTS

1. Test reports on: 1) Air Infiltration Test, per FBC, TAS 202-94
   2) Uniform Static Air Pressure Test, Loading per FBC, TAS 202-94
   3) Water Resistance Test, per FBC, TAS 202-94
   4) Large Missile Impact Test per FBC, TAS 201-94
   5) Cyclic Wind Pressure Loading per FBC, TAS 203-94
   6) Forced Entry Test, per FBC 2411.3.2.1, and TAS 202-94

   along with marked-up drawings and installation diagram of a white PVC horizontal sliding window, prepared by National Certified Testing Laboratories, Test Report No. **NTCL-110-11507-1**, dated 08/18/08, revised on 09/03/08, signed and sealed by Harold Rupp, P.E.
   (Submitted under NOA No. 08-1210.12)

C. CALCULATIONS

1. Anchor verification calculations and structural analysis, complying with **FBC 5th Edition (2014)**, dated 03/31/15, with revision dated 09/01/15, prepared by PTC Product Design Group, LLC, signed and sealed by Robert J. Amoruso, P.E.
2. Glazing complies with **ASTM E1300-04**

D. QUALITY ASSURANCE

1. Miami-Dade Department of Regulatory and Economic Resources (RER).

E. MATERIAL CERTIFICATIONS

1. Notice of Acceptance No. **14-0916.10** issued to **Kuraray America, Inc.** for their **"Kuraray Butacite® PVB Glass Interlayer"** dated 04/25/15, expiring on 12/11/16.
2. Notice of Acceptance No. **12-1120.02,** issued to **Royal Window and Door Profiles, Plant 13**, for their **White Rigid PVC Exterior Extrusions**, approved on 02/28/13, expiring on 02/28/18.

Manuel Perez, P.E.
Product Control Examiner
NOA No. 18-0122.12
Expiration Date: July 22, 2019
Approval Date: March 08, 2018

NOTICE OF ACCEPTANCE: EVIDENCE SUBMITTED

F. STATEMENTS

1. Statement letter of conformance to, of complying with **FBC 5th Edition (2014)** and of no financial interest, dated 06/01/15, prepared by PTC Product Design Group, LLC, signed and sealed by Robert J. Amoruso, P.E.
2. Laboratory addendum letters in the Test Report No. **NTCL-110-11507-1**, issued by National Certified Testing Laboratories, dated 03/31/09 and 05/01/09, both signed and sealed by Harold E. Rupp, P.E.
   (Submitted under NOA No. 08-1210.12)
3. Laboratory compliance letter in the Test Report No. **NTCL-110-11507-1**, issued by National Certified Testing Laboratories, dated 08/18/08, signed and sealed by Harold E. Rupp, P.E.
   (Submitted under NOA No. 08-1210.12)

G. OTHERS

1. Notice of Acceptance No. **14-0128.06**, issued to Regency Plus, Inc. for their Series "5405" White PVC Horizontal Sliding Window - L.M.I., approved on 03/20/14 and expiring on 07/22/19.

Manuel Perez, P.E.
Product Control Examiner
NOA No. 18-0122.12
Expiration Date: July 22, 2019
Approval Date: March 08, 2018

NOTICE OF ACCEPTANCE: EVIDENCE SUBMITTED

2. NEW EVIDENCE SUBMITTED

A. DRAWINGS

1. Drawing No. **RPLS0063**, Sheets 1 through 6 of 6, titled "Impact Series 5405 Horizontal Slider Window", dated 11/26/08, with revision **J** dated 01/08/18, prepared by PTC Product Design Group, LLC, signed and sealed by Robert J. Amoruso, P.E.

B. TESTS

1. None

C. CALCULATIONS

1. None

D. QUALITY ASSURANCE

1. Miami-Dade Department of Regulatory and Economic Resources (RER)

E. MATERIAL CERTIFICATIONS

1. Notice of Acceptance No. **17-1114.14** issued to **Kuraray America, Inc.** for their "**Trosifol® Ultraclear, Clear and Color PVB Glass Interlayers**" dated 01/18/18, expiring on 07/08/19.
2. Notice of Acceptance No. **16-0712.03,** issued to **ENERGI Fenestration Solutions USA, Inc.**, for their **White Rigid PVC Exterior Extrusions for Windows and Doors**, approved on 08/10/17, expiring on 02/28/18.

F. STATEMENTS

1. Statement letter of conformance, complying with **FBC 6th Edition (2017)**, dated January 8, 2018, prepared by PTC Product Design Group, LLC, signed and sealed by Robert J. Amoruso, P.E.

G. OTHERS

1. Notice of Acceptance No. **15-0618.03**, issued to Regency Plus, Inc. for their Series "5405" White PVC Horizontal Sliding Window – L.M.I., approved on 10/01/15 and expiring on 07/22/19.

Manuel Perez, P.E.
Product Control Examiner
NOA No. 18-0122.12
Expiration Date: July 22, 2019
Approval Date: March 08, 2018

REGENCY PLUS, INC.

IMPACT SERIES 5405 HORIZONTAL SLIDER WINDOW - LMI

INSTALLATION ANCHORAGE DETAILS

GENERAL NOTES:

1. THE PRODUCT ANCHORAGE SHOWN HEREIN IS DESIGNED TO COMPLY WITH THE CURRENT EDITION OF THE FLORIDA BUILDING CODE (FBC) INCLUDING THE HIGH VELOCITY HURRICANE ZONE (HVHZ) AT THE DESIGN PRESSURE STATED HEREIN. △J

2. THE PRODUCT DETAILS CONTAINED HEREIN ARE BASED UPON SIGNED AND SEALED TEST REPORT # NCTL-110-11507-1 DATED 08/20/08 AND ASSOCIATED LABORATORY STAMPED DRAWINGS AND WERE TESTED IN ACCORDANCE WITH HIGH VELOCITY HURRICANE ZONE TESTING PROTOCOLS TAS-201, TAS-202 AND TAS-203. △G

3. THE PRODUCT HAS BEEN EVALUATED FOR CONFORMANCE TO THE STANDARDS LISTED IN THE CURRENT EDITION OF THE FLORIDA BUILDING CODE (FBC) AND IS IN COMPLIANCE WITH SAID STANDARDS INCLUDING HIGH VELOCITY HURRICANE ZONE (HVHZ) REQUIREMENTS. △J

4. ADEQUACY OF THE EXISTING STRUCTURAL CONCRETE MASONRY AND 2X FRAMING AS A MAIN WIND FORCE RESISTING SYSTEM CAPABLE OF WITHSTANDING AND TRANSFERRING APPLIED PRODUCT LOADS TO THE STRUCTURE IS THE RESPONSIBILITY OF THE ENGINEER OR ARCHITECT OF RECORD.

5. 1X AND 2X BUCKS (WHEN USED) SHALL BE DESIGNED AND ANCHORED TO PROPERLY TRANSFER ALL LOADS TO THE STRUCTURE. BUCK DESIGN AND INSTALLATION IS THE RESPONSIBILITY OF THE ENGINEER OR ARCHITECT OF RECORD.

6. THE INSTALLATION DETAILS DESCRIBED HEREIN ARE GENERIC AND MAY NOT REFLECT ACTUAL CONDITIONS FOR A SPECIFIC SITE. IF SITE CONDITIONS CAUSE INSTALLATION TO DEVIATE FROM THE REQUIREMENTS DETAILED HEREIN, THEN THE BUILDING OFFICIAL MAY ELECT ONE OF THE FOLLOWING OPTIONS:

   A. OUTSIDE HVHZ: REQUIRE THAT A LICENSED ENGINEER OR ARCHITECT PREPARE AND SUBMIT SITE SPECIFIC DOCUMENTS FOR USE WITH THIS DOCUMENT.
   B. INSIDE HVHZ: REQUIRE THAT A ONE-TIME SITE SPECIFIC APPROVAL BE APPLIED FOR AND OBTAINED FROM THE MIAMI-DADE COUNTY PRODUCT CONTROL. △G

7. MATERIALS:

   △J 7.1 WINDOW FRAME MATERIAL: ENERGI FENESTRATION SOLUTIONS USA, INC., WHITE RIGID PVC EXTERIOR EXTRUSIONS FOR WINDOWS AND DOORS PER CURRENT MIAMI-DADE NOTICE OF ACCEPTANCE (NOA).

   △J 7.2 GLAZING INTERLAYER KURARAY AMERICA, INC. TROSIFOL INTERLAYER PER CURRENT MIAMI DADE NOTICE OF ACCEPTANCE (NOA).

△F 8. NOT USED.

△D 9. GLASS MEETS THE REQUIREMENTS OF ASTM E1300-04e1.

10. DESIGNATIONS "X" AND "O" STAND FOR THE FOLLOWING:
    X: OPERABLE PANEL
    O: FIXED PANEL

11. A 1/3 INCREASE IN ALLOWABLE STRESS FOR WIND LOADS WAS NOT USED IN THE DESIGN OF THE PRODUCT(S) SHOWN HEREIN. WIND LOAD DURATION FACTOR (Cd = 1.6) △G HAS BEEN USED FOR WOOD ANCHOR DESIGN WHERE WOOD-ONLY FAILURE GOVERNS. FOR OTHER MATERIALS, APPROPRIATE SAFETY FACTORS PER THE APPLICABLE DESIGN STANDARD ARE USED.

12. IN AREAS WHERE WIND-BORNE DEBRIS PROTECTION REQUIREMENTS EXIST, USE OF AN APPROVED IMPACT PROTECTIVE SYSTEM IN NOT NEEDED.

INSTALLATION NOTES:

1. ONE (1) INSTALLATION ANCHOR IS REQUIRED AT EACH ANCHOR LOCATION SHOWN.

2. THE NUMBER OF INSTALLATION ANCHORS DEPICTED IS THE MINIMUM NUMBER OF ANCHORS TO BE USED FOR PRODUCT INSTALLATION.

3. SHIM AS REQUIRED AT EACH INSTALLATION ANCHOR THRU MAIN FRAME WITH LOAD BEARING SHIM(S). MAXIMUM ALLOWABLE SHIM SIZE IS 1/4 INCH. SHIM WHERE SPACE OF 1/16 INCH OR GREATER OCCURS. SHIM(S) SHALL BE CONSTRUCTED OF HIGH DENSITY PLASTIC OR BETTER.

4. FOR INSTALLATION INTO WOOD FRAMING, USE #12 WOOD SCREWS OF SUFFICIENT LENGTH TO ACHIEVE 1 1/2 INCH MINIMUM EMBEDMENT. MINIMUM EDGE DISTANCE IS 7/8 INCH.

△F 5. FOR INSTALLATION THROUGH 1X BUCK TO CONCRETE / MASONRY, OR DIRECTLY INTO CONCRETE / MASONRY, USE 1/4 INCH ITW ADVANCED THREADFORM TAPCONS OF SUFFICIENT LENGTH TO ACHIEVE THE FOLLOWING:
   5.1. CONCRETE SUBSTRATE
      5.1.1. 1 1/2 INCH MINIMUM EMBEDMENT
      5.1.2. 1-1/2 INCH MINIMUM EDGE DISTANCE
   5.2. MASONRY SUBSTRATE
      5.2.1. 1 INCH MINIMUM EMBEDMENT
      5.2.2. 2 INCH MINIMUM EDGE DISTANCE

6. FOR PARTING STOP INSTALLATION USE #8 X 1 1/2 INCH WOOD SCREWS.

7. MINIMUM EMBEDMENT AND EDGE DISTANCE EXCLUDE WALL FINISHES, INCLUDING BUT NOT LIMITED TO STUCCO, FOAM, BRICK VENEER AND SIDING.

8. INSTALLATION ANCHORS AND ASSOCIATED HARDWARE MUST BE MADE OF CORROSION RESISTANT MATERIAL OR HAVE A CORROSION RESISTANT COATING.

9. FOR HOLLOW BLOCK AND GROUT FILLED BLOCK, DO NOT INSTALL INSTALLATION ANCHORS INTO MORTAR JOINTS. EDGE DISTANCE IS MEASURED FROM FREE EDGE OF BLOCK OR EDGE OF MORTAR JOINT INTO FACE SHELL OF BLOCK.

10. INSTALLATION ANCHORS SHALL BE INSTALLED IN ACCORDANCE WITH ANCHOR MANUFACTURER'S INSTALLATION INSTRUCTIONS AND ANCHORS SHALL NOT BE USED IN SUBSTRATES WITH STRENGTHS LESS THAN THE MINIMUM STRENGTH SPECIFIED BY THE ANCHOR MANUFACTURER.

11. INSTALLATION ANCHOR CAPACITIES FOR PRODUCTS HEREIN ARE BASED ON SUBSTRATE MATERIALS WITH THE FOLLOWING PROPERTIES:

   △J A. WOOD PROTECTION.WOOD PROTECTION.WOOD - PRESSURE TREATED SOUTHERN YELLOW PINE. MINIMUM SPECIFIC GRAVITY OF 0.55 LUMBER MUST COMPLY WITH CURRENT EDITION FBC/FRC AS RELATED TO WOOD PROTECTION.
   △F B. CONCRETE -MINIMUM COMPRESSIVE STRENGTH OF 2500 psi AND CONFORMS TO ACI 301.
   △F C. MASONRY - STRENGTH CONFORMS TO ASTM C90, MEDIUM WEIGHT WITH DENSITY > 117 PCF.

TABLE OF CONTENTS

SHEET	REV.	SHEET DESCRIPTION
1	F	GENERAL AND INSTALLATION NOTES
2	F	ELEVATION AND ANCHOR LAYOUTS
3	F	VERTICAL SECTIONS
4	F	HORIZONTAL SECTIONS, GLAZING DETAIL & CORNER DETAIL
5	F	CORNER DETAIL
6	F	COMPONENTS AND BILL OF MATERIALS

DESIGN PRESSURE RATING (PSF)	IMPACT RATING
±55.0	LARGE MISSILE IMPACT

PROJECT #417-0907

REV	DESCRIPTION	DATE	BY
J	UPDATE TO 6TH ED. (2017) FBC	1/8/18	RJA

REGENCY PLUS, INC.
2000 LOCUST GAP HIGHWAY
MT. CARMEL, PA 17851

TITLE: IMPACT SERIES 5405 HORIZONTAL SLIDER WINDOW GENERAL AND INSTALLATION NOTES

DRAWN BY: SMC | DATE: 11/26/08
SCALE: N.T.S. | DRAWING NO: RPLS0063
REV: J | SHEET: 1 OF 6

PTC Product Design Group, LLC
PO Box 520775, Longwood, FL 32752-0775
321-690-1788 info@ptc-corp.com
FBPE Cert. of Auth. No. 29935

Robert J. Amoruso, P.E.
Florida P.E. No. 49752

ROBERT JAMES AMORUSO LICENSE No 49752 STATE OF FLORIDA PROFESSIONAL ENGINEER
1/9/18

PRODUCT REVISED
as complying with the Florida Building Code
Acceptance No 16-0122.12
Expiration Date Jan 22, 2019
By Manuel Perez
Miami Dade Product Control

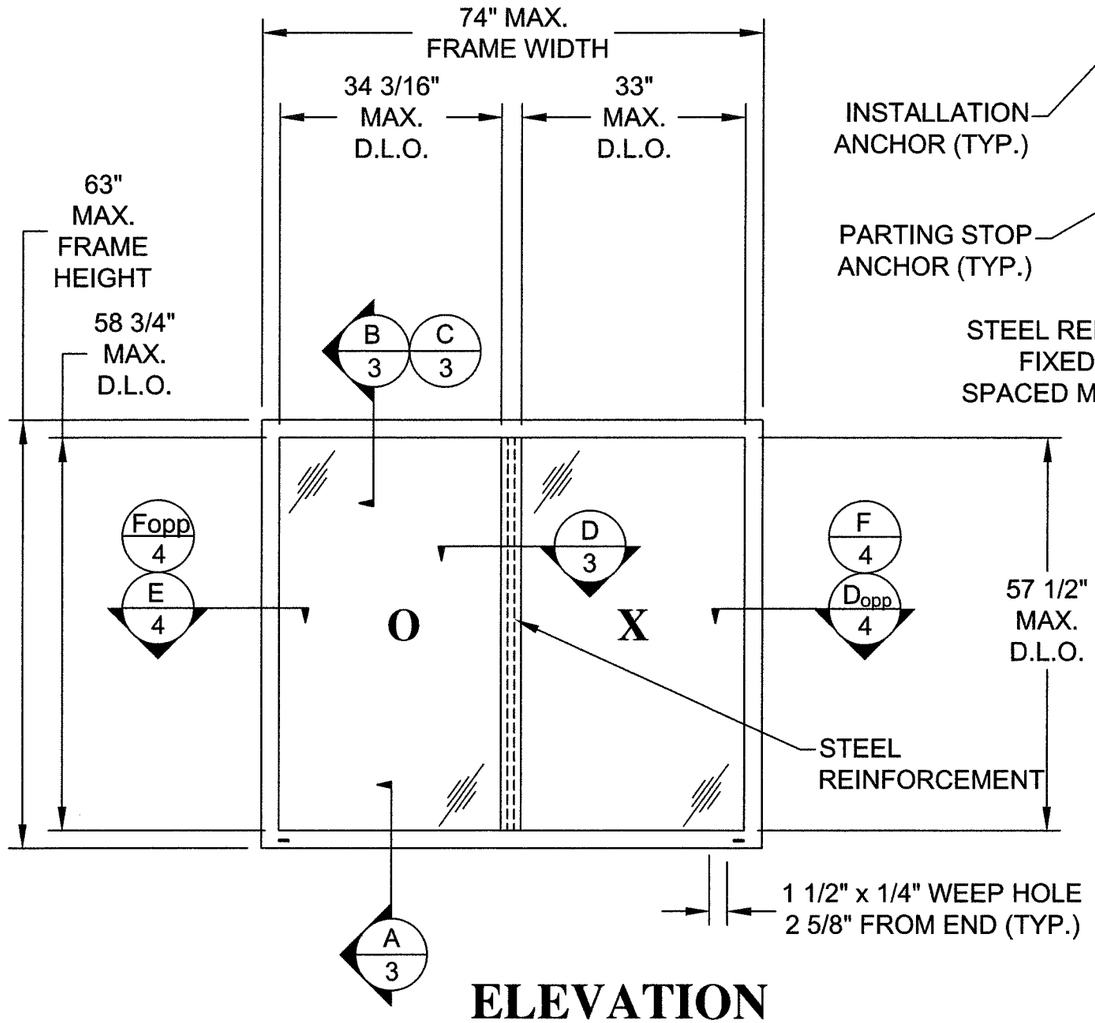

ELEVATION

EXTERIOR VIEW

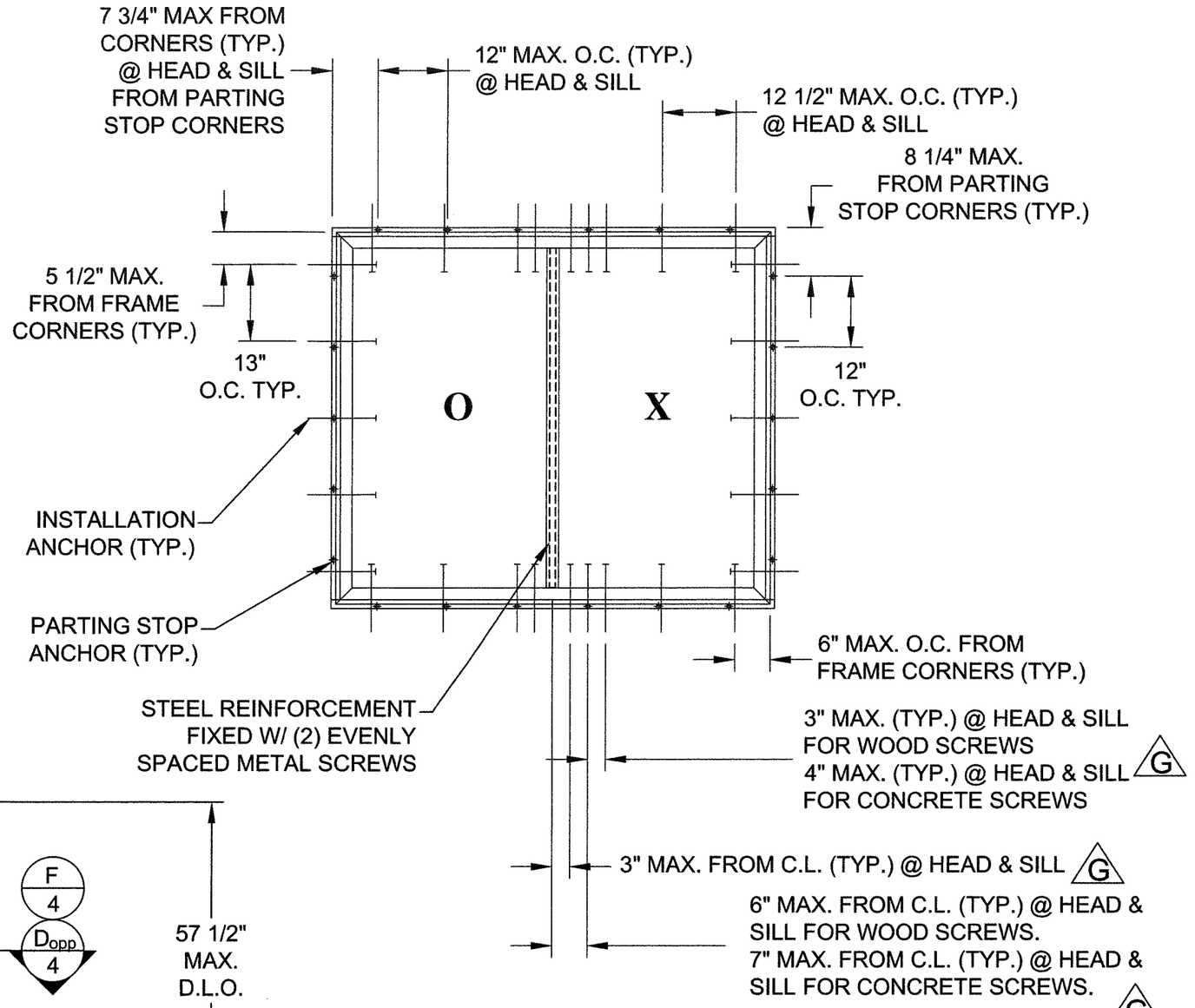

ANCHOR LAYOUT

EXTERIOR VIEW

REV	DESCRIPTION	DATE	BY
J	UPDATE TO 6TH ED. (2017) FBC	1/8/18	RJA

PROJECT #417-0907

REGENCY PLUS, INC.
2000 LOCUST GAP HIGHWAY
MT. CARMEL, PA 17851

TITLE: IMPACT SERIES 5405 HORIZONTAL SLIDER WINDOW
ELEVATION AND ANCHOR LAYOUT

DRAWN BY: SMC | DATE: 11/26/08
SCALE: N.T.S. | DRAWING NO: RPLS0063
REV: J | SHEET: 2 OF 6

PTC Product Design Group, LLC
PO Box 520775, Longwood, FL 32752-0775
321-690-1788 info@ptc-corp.com
FBPE Cert. of Auth. No. 25935

Robert J. Amoruso, P.E.
Florida P.E. No. 49752

ROBERT JAMES AMORUSO LICENSE No 49752 STATE OF FLORIDA PROFESSIONAL ENGINEER
1/9/19

PRODUCT REVISED
as complying with the Florida
Building Code
Acceptance No 18-0122.12
Expiration Date 1/1/2019
By Manuel Perez
Miami-Dade Product Control

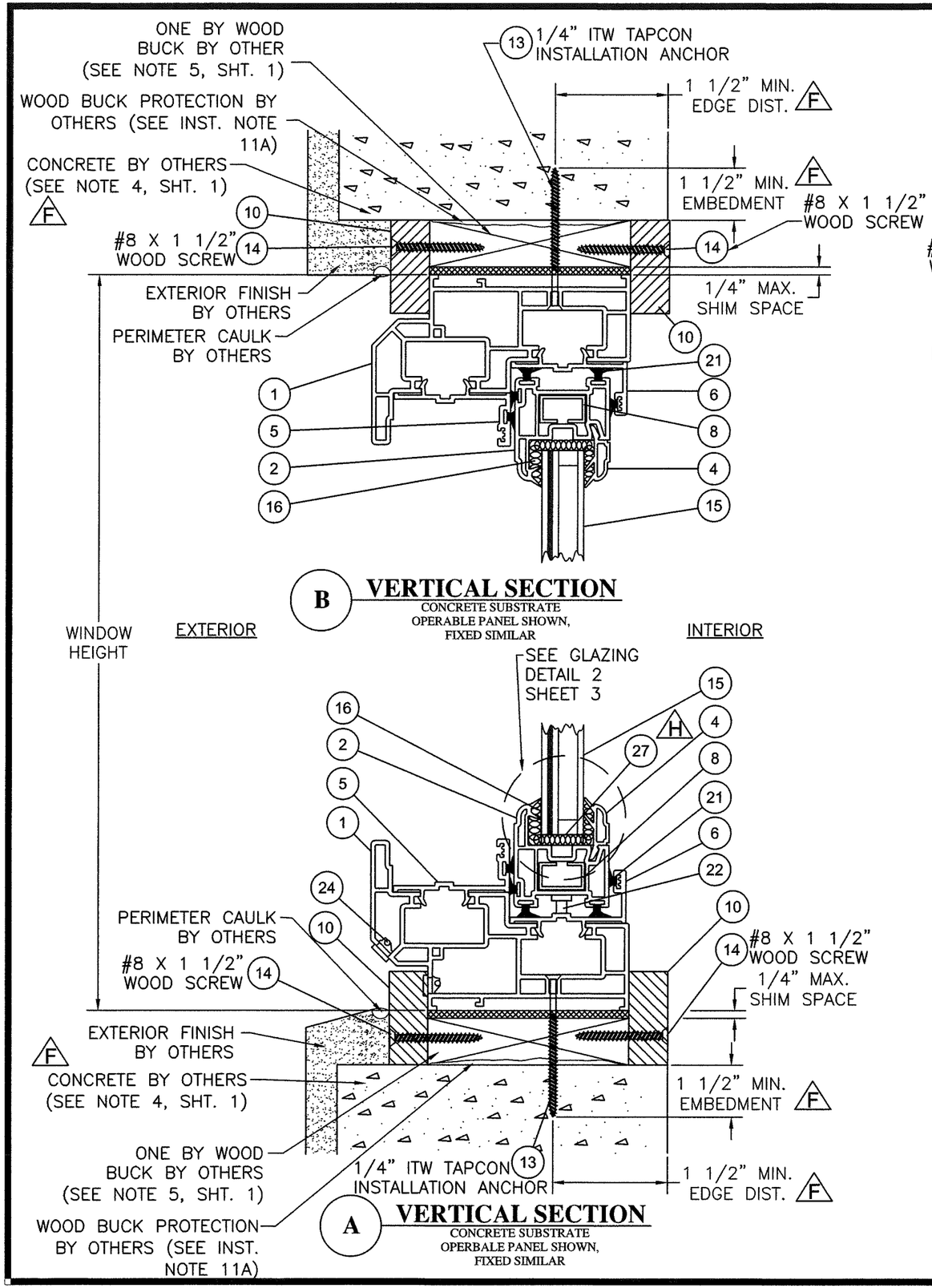

B **VERTICAL SECTION**
CONCRETE SUBSTRATE
OPERABLE PANEL SHOWN,
FIXED SIMILAR

A **VERTICAL SECTION**
CONCRETE SUBSTRATE
OPERBALE PANEL SHOWN,
FIXED SIMILAR

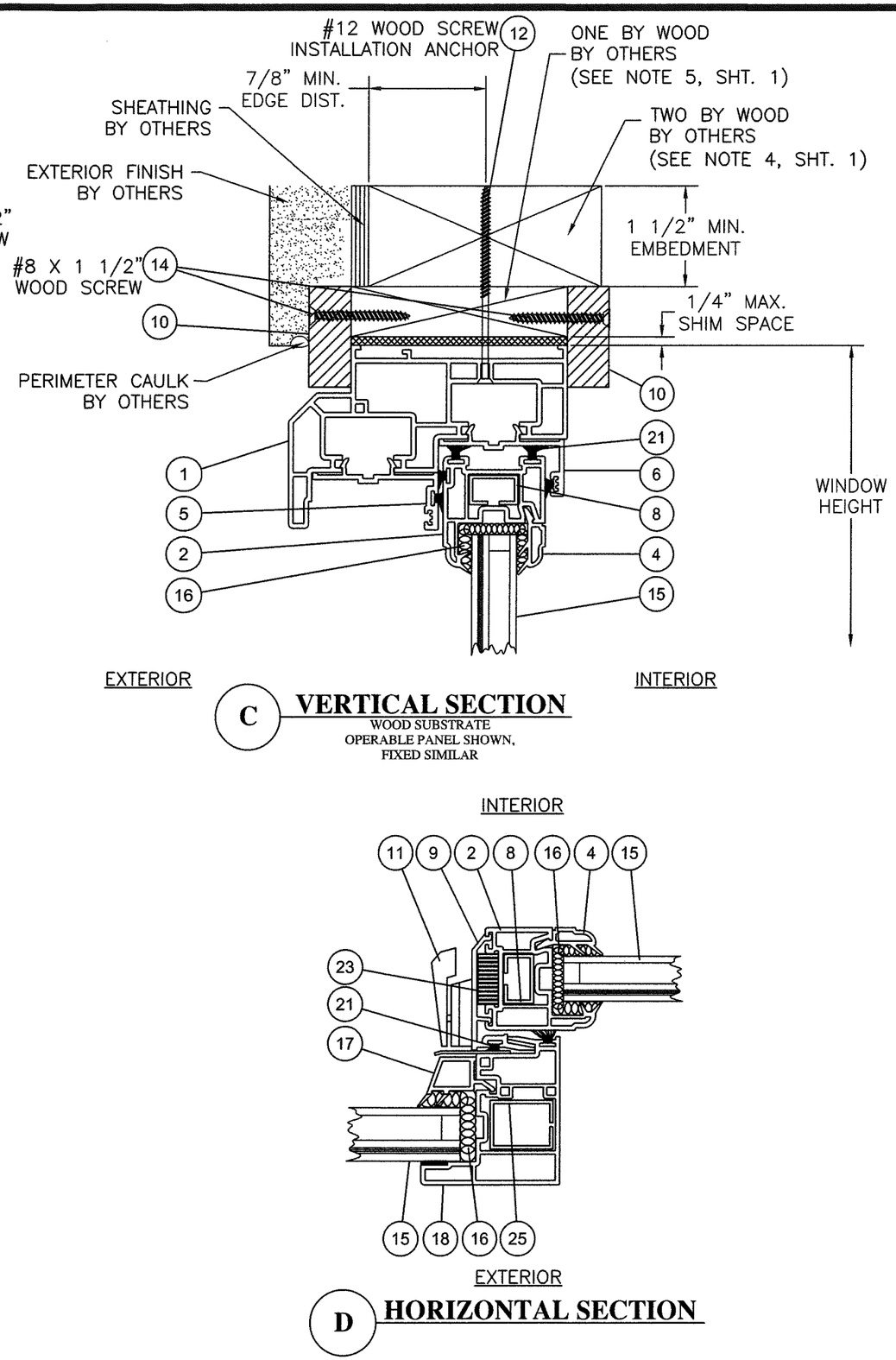

C **VERTICAL SECTION**
WOOD SUBSTRATE
OPERABLE PANEL SHOWN,
FIXED SIMILAR

D **HORIZONTAL SECTION**

PROJECT #417-0907

REV	DESCRIPTION	DATE	BY
J	UPDATE TO 6TH ED. (2017) FBC	1/8/18	RJA

REGENCY PLUS, INC.
2000 LOCUST GAP HIGHWAY
MT. CARMEL, PA 17851

TITLE: IMPACT SERIES 5405 HORIZONTAL SLIDER WINDOW VERTICAL SECTIONS

DRAWN BY: SMC
DATE: 11/26/08
SCALE: N.T.S.
DRAWING NO: RPLS0063
REV: J
SHEET: 3 OF 6

PTC Product Design Group, LLC
PO Box 520775, Longwood, FL 32752-0775
321-690-1788 info@ptc-corp.com
FBPE Cert. of Auth. No. 25935

Robert J. Amoruso, P.E.
Florida P.E. No. 49752

ROBERT JAMES AMORUSO
LICENSE
No 49752
STATE OF FLORIDA
PROFESSIONAL ENGINEER

PRODUCT REVISED
as complying with the Florida Building Code
Acceptance No 18-0122.12
Expiration Date July 22, 2019
By Manuel Perez
Miami/Dade Product Control

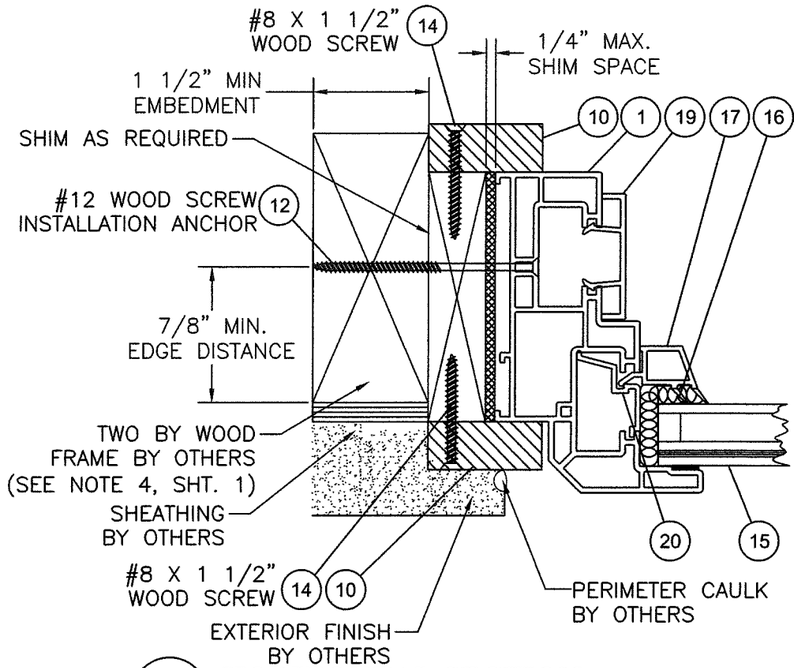

E **HORIZONTAL SECTION**
WOOD FRAME SUBSTRATE
(FIXED PANEL SHOWN,
OPERABLE PANEL SIMILAR)

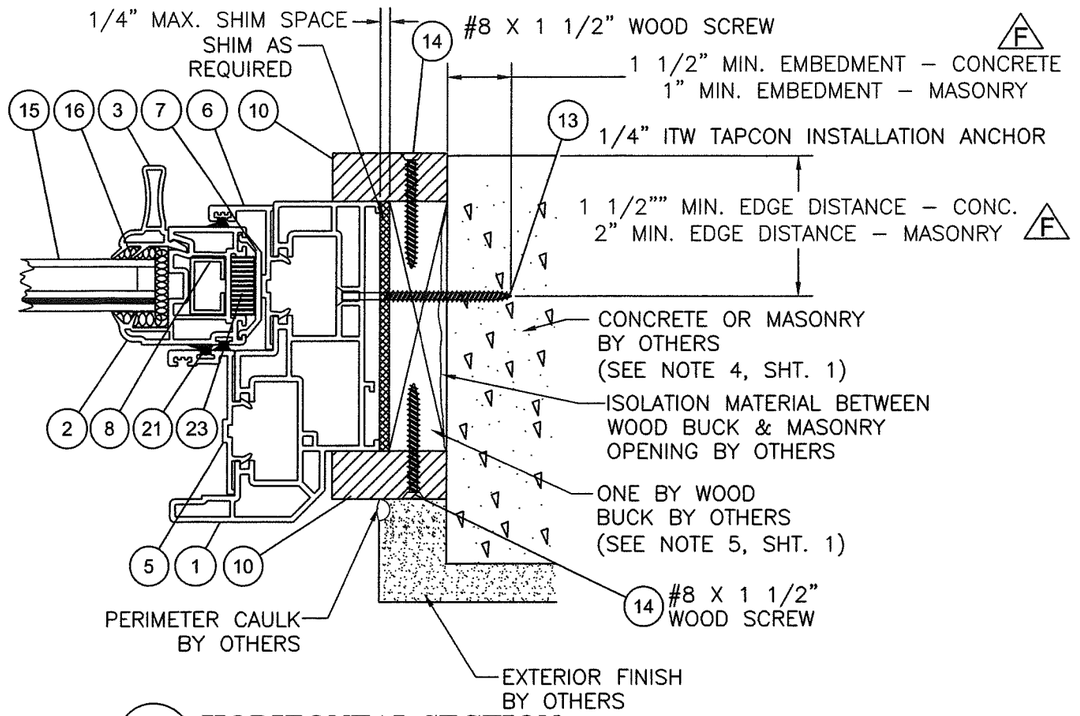

F **HORIZONTAL SECTION**
CONCRETE / MASONRY SUBSTRATE
(OPERBALE PANEL SHOWN,
FIXED PANEL SIMILAR)

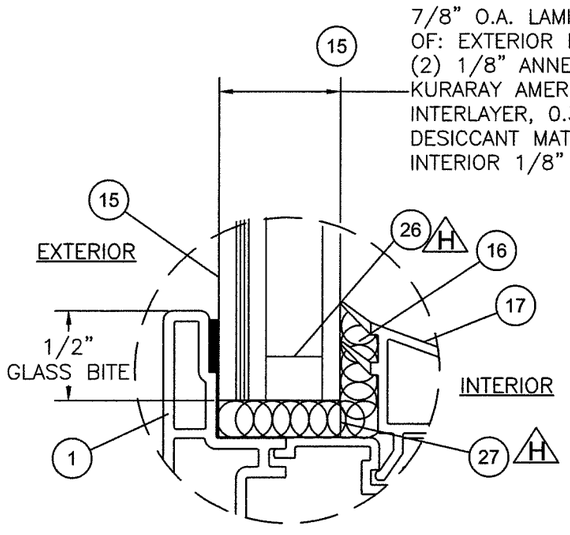

GLAZING DETAIL 1

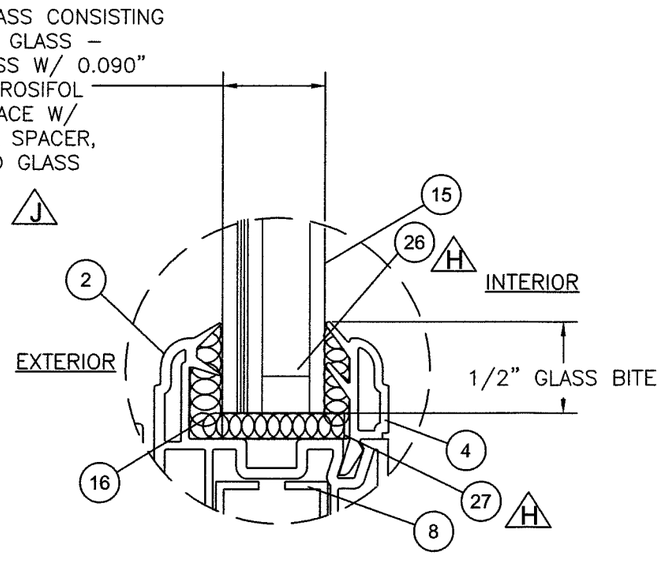

GLAZING DETAIL 2

PROJECT #417-0907					
			J	UPDATE TO 6TH ED. (2017) FBC	1/8/18	RJA
			REV	DESCRIPTION	DATE	BY

REGENCY PLUS, INC.
2000 LOCUST GAP HIGHWAY
MT. CARMEL, PA 17851

TITLE: IMPACT SERIES 5405 HORIZONTAL SLIDER WINDOW
HORIZONTAL SECTIONS, GLAZING DETAIL & CORNER DETAIL

DRAWN BY: SMC | DATE: 11/26/08
SCALE: N.T.S. | DRAWING NO: RPLS0063
REV: J | SHEET: 4 OF 6

PTC Product Design Group, LLC
PO Box 520775, Longwood, FL 32752-0775
321-690-1788 info@ptc-corp.com
FBPE Cert. of Auth. No. 29935

Robert J. Amoruso, P.E.
Florida P.E. No. 49752

ROBERT JAMES AMORUSO LICENSE No 49752 STATE OF FLORIDA PROFESSIONAL ENGINEER
1/9/19

PRODUCT REVISED
is complying with the Florida
Building Code
Acceptance No 18-0122.12
Expiration Date July 22, 2019
By
Miami-Dade Product Control

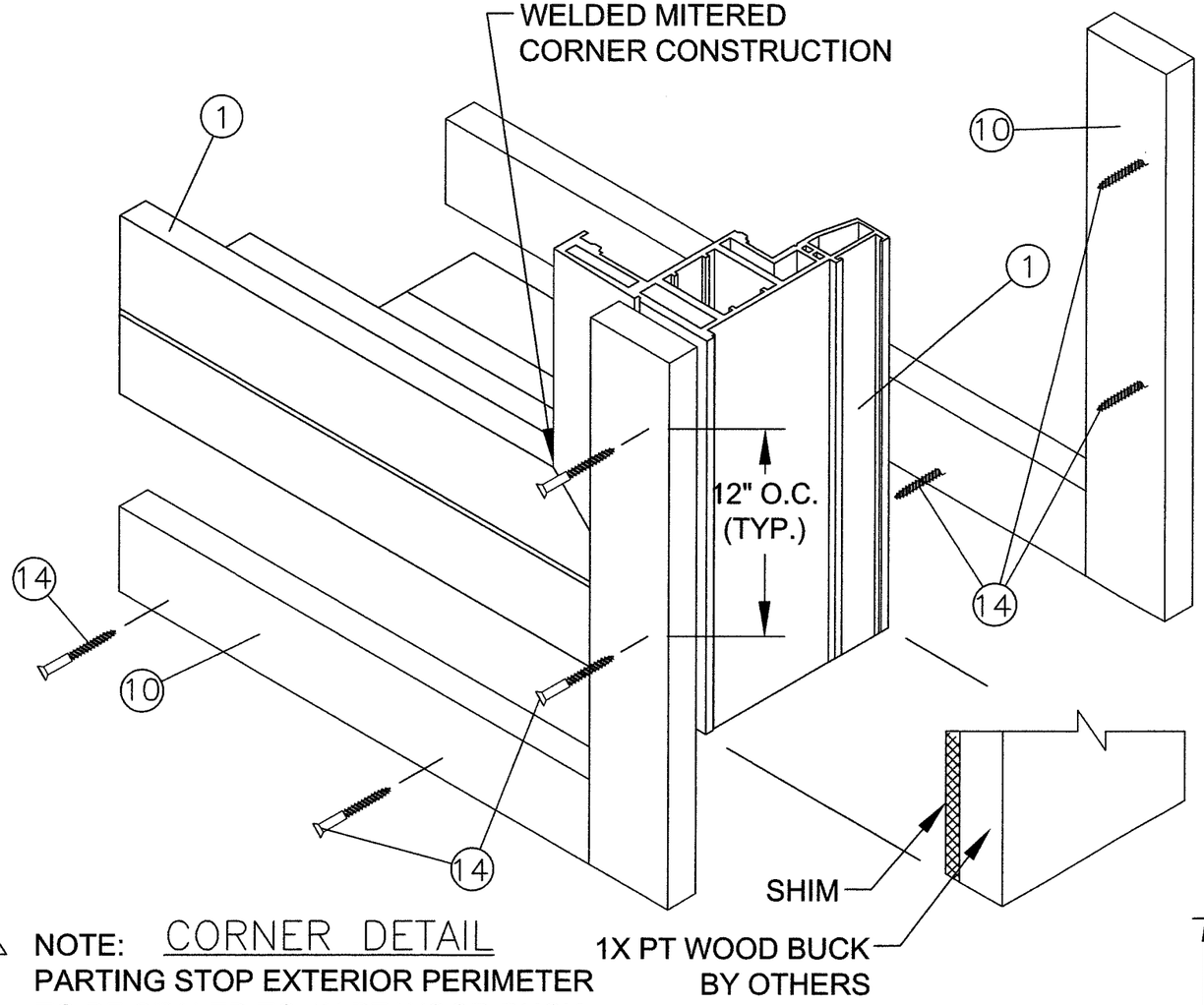

E NOTE: CORNER DETAIL
PARTING STOP EXTERIOR PERIMETER
TO BE SEALED TO 1X PT WOOD BUCK
WITH SIKA 551 SILICONE

H 23 **TILT LATCH**
STEEL - ZINC COATED

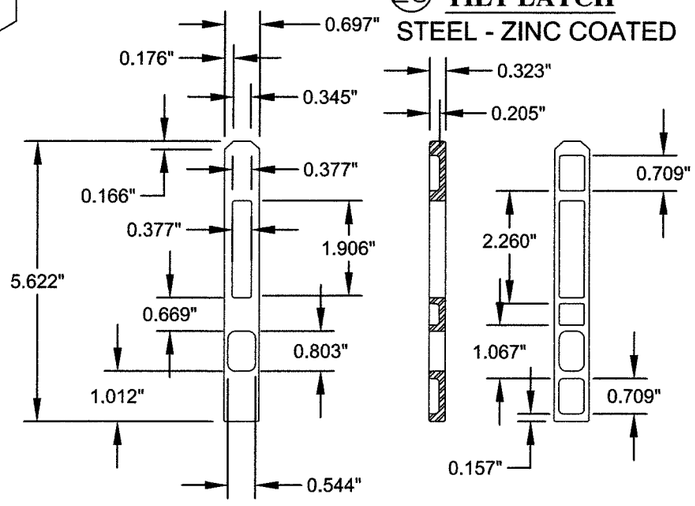

PROJECT #417-0907

REV	DESCRIPTION	DATE	BY
J	UPDATE TO 6TH ED. (2017) FBC	1/8/18	RJA

REGENCY PLUS, INC.
2000 LOCUST GAP HIGHWAY
MT. CARMEL, PA 17851

TITLE: IMPACT SERIES 5405 HORIZONTAL SLIDER WINDOW
CORNER DETAIL

DRAWN BY: SMC | DATE: 11/26/08
SCALE: N.T.S. | DRAWING NO: RPLS0063
REV: J | SHEET: 5 OF 6

PTC Product Design Group, LLC
PO Box 520775, Longwood, FL 32752-0775
321-690-1788 info@ptc-corp.com
FBPE Cert. of Auth. No. 29935

Robert J. Amoruso, P.E.
Florida P.E. No. 49752

ROBERT JAMES AMORUSO LICENSE No 49752 STATE OF FLORIDA PROFESSIONAL ENGINEER
1/9/18

PRODUCT REVISED
as complying with the Florida
Building Code
Acceptance No 18-0122.12
Expiration Date July 12, 2019
By Manuel Perez
Miami-Dade Product Control

(1) MAIN FRAME

WHITE RIGID PVC
0.070" THK.

WEEP HOLES (SILL):
1/2" X 1/2" EACH END (INT. TRACK)
1/2" X 3/8" MIDSPAN (INT. TRACK)
5/8" X 3/8" EACH END (EXT. TRACK)

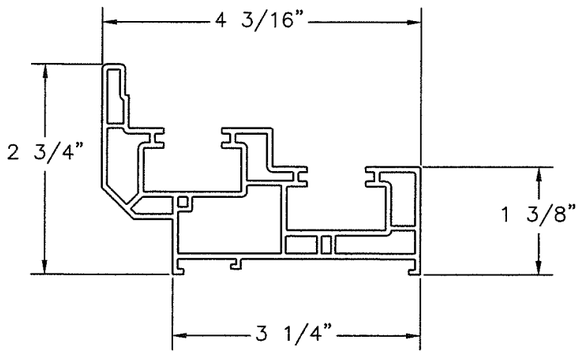

(2) SASH FRAME

WHITE RIGID PVC
0.068" THK.

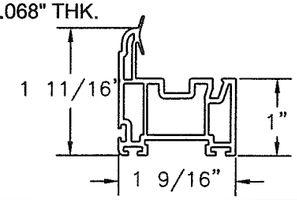

(3) GLAZING STOP W/ HANDLE

WHITE RIGID PVC
0.055" THK.

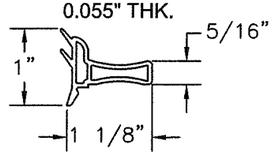

GLAZING STOP - OPERABLE LITE

(4)
WHITE RIGID PVC
0.055" THK.

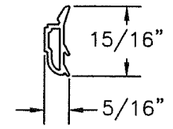

(7) SASH COVER

WHITE RIGID PVC
0.075" THK.

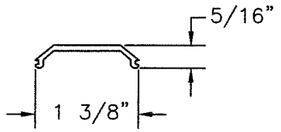

(17) GLAZING STOP - FIXED LITE

WHITE RIGID PVC
0.070" THK.

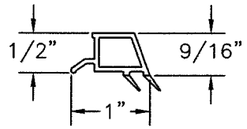

(19) PANEL STOP / FRAME COVER

WHITE RIGID PVC
0.050" THK.

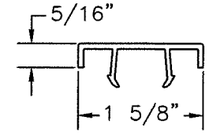

(5) POCKET COVER (EXT. TRACK)

WHITE RIGID PVC
0.070" THK.

(6) POCKET COVER (INT. TRACK)

WHITE RIGID PVC
0.070" THK.

(23) TILT LATCH

STEEL - ZINC COATED

SEE SHEET 5

WEEP HOLES:
3/4" X 3/8" EACH END
1/4" X 9/16" MID SPAN

(9) INTERLOCK COVER

WHITE RIGID PVC
0.070" THK.

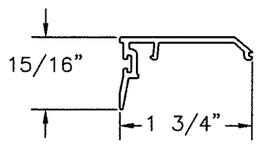

(8) REINFORCEMENT SASH FRAME

STEEL
0.050" THICK
Fy = 30 - 50 SKI
Fu = 37.5 - 68.7 KPSI

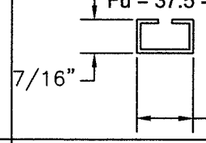

(18) FIXED MEETING RAIL

WHITE RIGID PVC
0.066" THK.

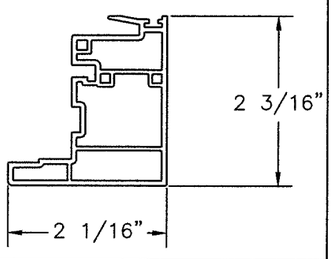

(10) PARTING STOP

WOOD

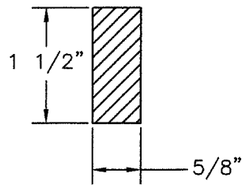

(25) REINFORCEMENT FIXED MEETING RAIL

STEEL
0.050" THICK
Fy = 30 - 50 KSI
Fu = 37.5 - 68.7 KPSI

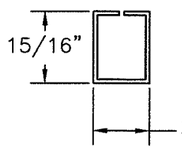

(20) POCKET INSERT FIXED PANEL

WHITE RIGID PVC
0.060" THK.

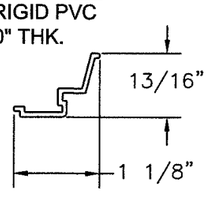

BILL OF MATERIALS

ITEM #	DESCRIPTION	MATERIAL	SUPPLIER
1	MAIN FRAME	WHITE RIGID PVC	** EFS J
2	SASH FRAME	WHITE RIGID PVC	** EFS J
3	GLAZING STOP WITH HANDLE	WHITE RIGID PVC	** EFS J
4	GLAZING STOP - OPERABLE LITE	WHITE RIGID PVC	** EFS J
5	POCKET COVER (EXT. TRACK)	WHITE RIGID PVC	** EFS J
6	POCKET COVER (INT. TRACK)	WHITE RIGID PVC	** EFS J
7	SASH COVER	WHITE RIGID PVC	** EFS J
8	REINFORCEMENT (SASH FRAME) 15 GA.	STEEL ALLOY 1008/1010*	REGENCY PLUS, INC.
9	INTERLOCK COVER	WHITE RIGID PVC	** EFS J
10	PARTING STOP	WOOD PT SYP	G=0.55 MIN.
11	CAM SWEEP LOCK & KEEPER	STEEL	TRUTH
12	#12 WOOD SCREW (INSTALLATION ANCHOR)	STEEL	-----
F 13	1/4" ADVANCED THREADFORM TAPCON	STEEL	ITW
14	#8 X 1 1/2" WOOD SCREW	STEEL	-----
15	7/8" O.A. INSULATED GLASS (SEE GLAZING DETAIL ON SHEET 4)	GLASS	EDGESEAL
16	SIKA FLEX 552	SILICONE	SIKA
17	GLAZING STOP - FIXED LITE	WHITE RIGID PVC	** EFS J
18	FIXED MEETING RAIL	WHITE RIGID PVC	** EFS J
19	PANEL STOP / FRAME COVER	WHITE RIGID PVC	** EFS J
20	POCKET INSERT - FIXED PANEL	WHITE RIGID PVC	** EFS J
21	FINSEAL WEATHERSTRIP	VINYL	ULTRAFAB
22	NYLON HOUSED METAL ROLLERS	NYLON / STEEL	SAUNDERS ENG'G
23	HURRICANE TILT LATCH (1057 EW)(SEE NOTE BELOW)	STEEL - ZINC COATED	VISION IND.
24	WEEP HOLE COVERS	PLASTIC	RO-MAI
25	REINFORCEMENT (FIXED MEETING RAIL) 15 GA.	STEEL ALLOY 1008/1010	REGENCY PLUS, INC.
H 26	ENDUR 9.8 SS SPACER	STAINLESS STEEL	CARDINAL
H 27	GLAZING PAD (SETTING BLOCK - 2NB-8K-125-028-026)	NEOPRENE	FRANK LOWE

H NOTE: HURRICANE TILT LATCH BY VISION IND. USED TO SECURE OPERATING SASH TO MASTER FRAME. NOT SHOWN IN DRAWING.

*ASTM A-A1008A / A109

J ** EFS: ENERGI FENESTRATION SOLUTIONS USA, INC., PER CURRENT MD NOA.

REV	DESCRIPTION	DATE	BY
J	UPDATE TO 6TH ED. (2017) FBC	1/8/18	RJA

PROJECT #417-0907

REGENCY PLUS, INC.
2000 LOCUST GAP HIGHWAY
MT. CARMEL, PA 17851

TITLE: IMPACT SERIES 5405 HORIZONTAL SLIDER WINDOW
COMPONENTS AND BILL OF MATERIALS

DRAWN BY: SMC | DATE: 11/26/08 | SHEET: 6 OF 6
SCALE: N.T.S. | DRAWING NO: RPLS0063 | REV: J

PTC Product Design Group, LLC
PO Box 520775, Longwood, FL 32752-0775
321-690-1788 info@ptc-corp.com
FBPE Cert. of Auth. No. 25935

Robert J. Amoruso, P.E.
Florida P.E. No. 49752

ROBERT JAMES AMORUSO LICENSE No 49752 STATE OF FLORIDA PROFESSIONAL ENGINEER
1/9/18

PRODUCT REVISED
as complying with the Florida
Building Code
Acceptance No. 18-0122.12
Expiration Date July 22, 2019
By
Miami-Dade Product Control