MIAMI-DADE COUNTY

DEPARTMENT OF REGULATORY AND ECONOMIC RESOURCES (RER)
BOARD AND CODE ADMINISTRATION DIVISION

MIAMI–DADE COUNTY, FLORIDA
PRODUCT CONTROL SECTION
11805 S.W. 26 Street, Room 208
T (786) 315–2590, F (786) 315–2599
www.miamidade.gov/economy

NOTICE OF ACCEPTANCE (NOA)

Doralum Corporation
7040 NW 77 Terrace
Miami, FL 33166

SCOPE:

This NOA is being issued under the applicable rules and regulations governing the use of construction materials. The documentation submitted has been reviewed and accepted by Miami–Dade County RER–Product Control Section to be used in Miami–Dade County and other areas where allowed by the Authority Having Jurisdiction (AHJ).

This NOA shall not be valid after the expiration date stated below. The Miami–Dade County Product Control Section (In Miami–Dade County) and/or the AHJ (in areas other than Miami–Dade County) reserve the right to have this product or material tested for quality assurance purposes. If this product or material fails to perform in the accepted manner, the manufacturer will incur the expense of such testing and the AHJ may immediately revoke, modify, or suspend the use of such product or material within their jurisdiction. RER reserves the right to revoke this acceptance, if it is determined by Miami–Dade County Product Control Section that this product or material fails to meet the requirements of the applicable building code.

This product is approved as described herein, and has been designed to comply with the Florida Building Code, including the High Velocity Hurricane Zone.

DESCRIPTION: Series 100 Outswing Aluminum French Patio Door w/ Sidelites – N. I.

APPROVAL DOCUMENT: Drawing No. **W98–58**, titled "S–100 Alum. Outswing Door W/ Sidelites (N.I.)" sheets 1 through 6 of 6, dated 07/31/98, prepared by Al–Farooq Corporation, with revision "**J**", dated 04/16/18, signed and sealed by Javad Ahmad, P. E., bearing the Miami–Dade County Product Control Revision stamp with the Notice of Acceptance number and Expiration date by the Miami–Dade County Product Control Section.

MISSILE IMPACT RATING: None.

LABELING: Each unit shall bear a permanent label with the manufacturer's name or logo, city, state/ country, models/ series and following statement: "Miami–Dade County Product Control Approved" unless otherwise noted herein.

RENEWAL of this NOA shall be considered after a renewal application has been filed and there has been no change in the applicable building code negatively affecting the performance of this product.

TERMINATION of this NOA will occur after the expiration date or if there has been a revision or change in the materials, use, and/or manufacture of the product or process. Misuse of this NOA as an endorsement of any product, for sales, advertising or any other purposes shall automatically terminate this NOA. Failure to comply with any section of this NOA shall be cause for termination and removal of NOA.

ADVERTISEMENT: The NOA number preceded by the words Miami–Dade County, Florida, and followed by the expiration date may be displayed in advertising literature. If any portion of the NOA is displayed, then it shall be done in its entirety.

INSPECTION: A copy of this entire NOA shall be provided to the user by the manufacturer or its distributors and shall be available for inspection at the job site at the request of the Building Official.

This NOA **revises NOA No. 16-0617.10** and consists of this page 1, evidence pages E–1 and E–2, as well as approval document mentioned above.

The submitted documentation was reviewed by **Jorge M. Plasencia, P. E.**

MIAMI-DADE COUNTY APPROVED 04/26/2018

NOTICE OF ACCEPTANCE: EVIDENCE SUBMITTED

1. EVIDENCE SUBMITTED UNDER PREVIOUS NOA'S

A. DRAWINGS

1. Manufacturer's die drawings and sections.
   (Submitted under previous NOA's No.'s 95–0428.01 and 06–0905.01)
2. Drawing No. **W98–58**, titled "S–100 Alum Outswing Door W/ Sidelites (N.I.)" sheets 1 through 6 of 6, dated 07/31/98, prepared by AL–Farooq Corporations, dated 6/25/15 with revision "H" dated 06/07/16, signed and sealed by Javad Ahmad, P. E.

B. TESTS

1. Test reports on:
   1) Air Infiltration Test, per FBC, TAS 202–94
   2) Uniform Static Air Pressure Test, Loading per FBC TAS 202–94
   3) Water Resistance Test, per FBC, TAS 202–94
   4) Forced Entry Test, Side–Hinged Door Systems, per FBC 2411 3.2.1, TAS 202–94 and per AAMA 1304–02

   along with marked–up drawings and installation diagram of an Aluminum fixed window, prepared by Fenestration Testing Laboratory, Inc., Test Reports No. ('s):
   a) **FTL–5042,** dated 10/10/06, signed and sealed by Edmundo Largaespada, P. E.
      (Submitted under previous NOA No. 06–0905.01)
   b) **FTL–1051,** dated 12/21/94 signed and sealed by Yamil G. Kuri, P. E.
      (Submitted under previous NOA No. 95–0428.01)

C. CALCULATIONS

1. Anchor verification calculations and structural analysis, complying with FBC, prepared by Al–Farooq Corporation, dated 06/09/16, signed and sealed by Javad Ahmad, P. E.
2. Anchor verification calculations and structural analysis, complying with FBC, prepared by Al–Farooq Corporation, dated 06/22/15 and 07/01/15, signed and sealed by Javad Ahmad, P. E.
   (Submitted under previous NOA No. 15-0706.02)
3. Glazing complies with ASTM E1300–09

D. QUALITY ASSURANCE

1. Miami–Dade Department of Regulatory and Economic Resources (RER).

E. MATERIAL CERTIFICATIONS

1. None.

F. STATEMENTS

1. Statement letter of no financial interest, conformance and compliance with the **FBC–2014, 5th edition**, dated 06/07/16, signed and sealed by Javad Ahmad, P. E.

Jorge M. Plasencia, P. E.
Product Control Unit Supervisor
NOA No. 18-0122.19
Expiration Date: September 14, 2021
Approval Date: May 03, 2018

F. STATEMENTS (continued)

2. **FTL–5042,** dated 10/10/06, signed and sealed by Edmundo Largaespada, P. E.
   (Submitted under previous NOA No. 06–0905.01)
3. **FTL–1051,** dated 12/21/94 signed and sealed by Yamil G. Kuri, P. E.
   (Submitted under previous NOA No. 95–0428.01)

G. OTHERS

1. Notice of Acceptance No. **15-0706.02**, issued to Doralum Corporation, for their Series "**100 Outswing Aluminum Patio Doors W/Sidelites – N. I.**", approved on 12/10/15 and expiring on 09/14/16.

2. NEW EVIDENCE SUBMITTED

A. DRAWINGS

1. Drawing No. **W98–58**, titled "S–100 Alum Outswing Door W/ Sidelites (N.I.)" sheets 1 through 6 of 6, dated 07/31/98, prepared by Al–Farooq Corporation, with revision "J" dated 04/16/18, signed and sealed by Javad Ahmad, P. E.

B. TESTS

1. None.

C. CALCULATIONS

1. Anchor verification calculations and structural analysis, complying with **FBC 6th Edition (2017)**, prepared by Al–Farooq Corporation, dated 01/15/18 and revised 04/20/18, signed and sealed by Javad Ahmad, P. E.

D. QUALITY ASSURANCE

1. Miami–Dade Department of Regulatory and Economic Resources (RER).

E. MATERIAL CERTIFICATIONS

1. None.

F. STATEMENTS

1. Statement letter of conformance to **FBC 6th Edition (2017)** and of no financial interest, dated 12/19/17, signed and sealed by Javad Ahmad, P. E.

G. OTHERS

1. This NOA revises NOA #16-0617.10, expiring on 09/14/2021.

Jorge M. Plasencia, P. E.
Product Control Unit Supervisor
NOA No. 18-0122.19
Expiration Date: September 14, 2021
Approval Date: May 03, 2018

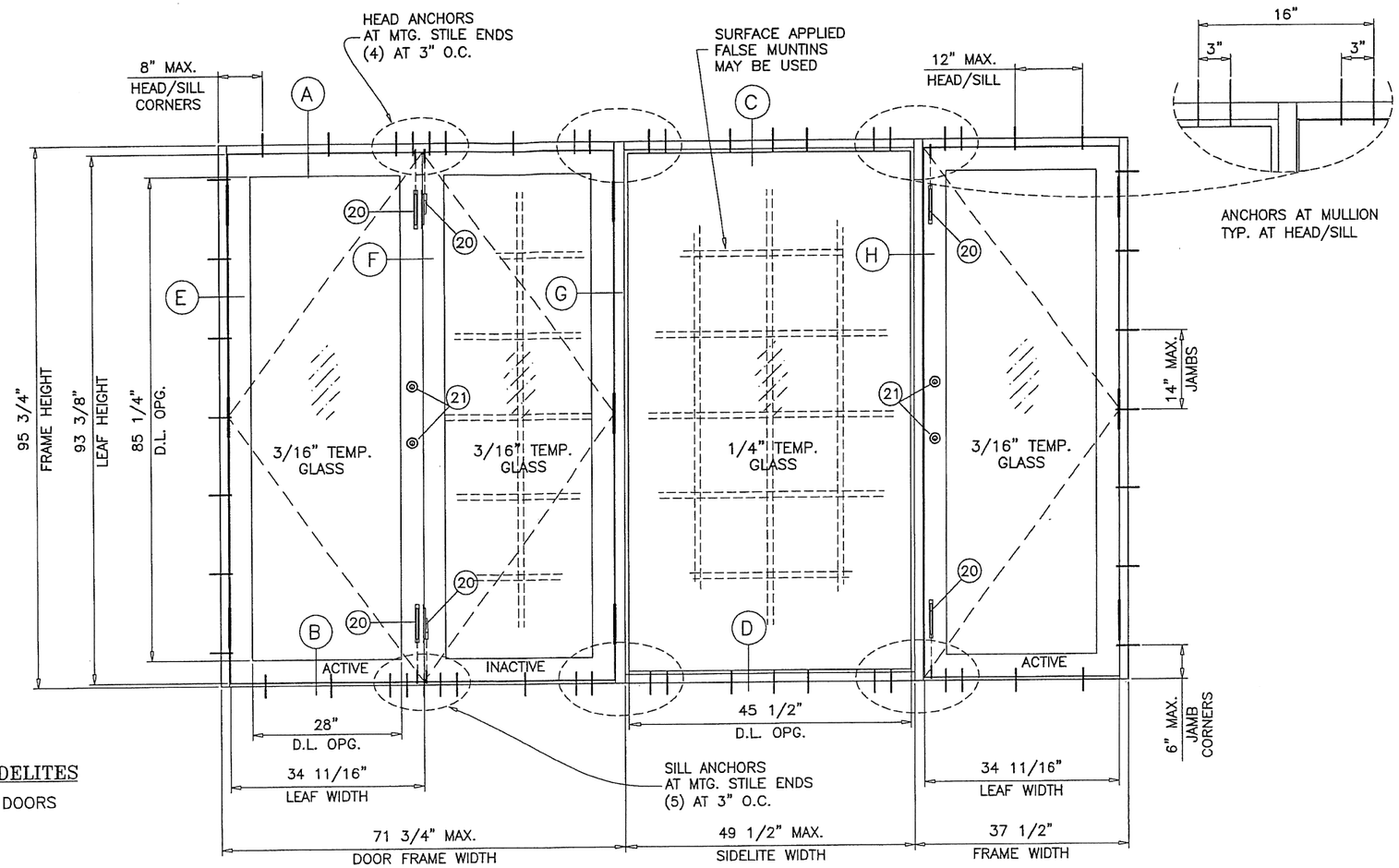

TYPICAL ELEVATION
(XXOX)
TESTED UNIT

SERIES-100 ALUMINUM OUTSWING DOOR W/ SIDELITES

APPROVAL APPLIES TO SINGLE (X) AND DOUBLE (XX) LEAF DOORS WITH OR WITHOUT SIDELITES.
SIDE LITES CAN BE ON ONE OR BOTH SIDES OF DOOR.
SEE SHEET 2 FOR DESIGN LOAD CAPACITIES.
LOWER VALUES FROM SIDELITE CAPACITY CHART OR DOOR CAPACITY WILL APPLY TO ENTIRE SYSTEM.

DOORS APPROVED FOR INSTALLATIONS WHERE WATER INFILTRATION RESISTANCE IS REQUIRED.

THIS PRODUCT HAS BEEN DESIGNED AND TESTED TO COMPLY WITH THE REQUIREMENTS OF THE 2017 (6TH EDITION) FLORIDA BUILDING CODE INCLUDING HIGH VELOCITY HURRICANE ZONE (HVHZ).

1BY OR 2BY WOOD BUCKS & BUCK FASTENERS BY OTHERS, MUST BE DESIGNED AND INSTALLED ADEQUATELY TO TRANSFER APPLIED PRODUCT LOADS TO THE BUILDING STRUCTURE.

ANCHORS SHALL BE CORROSION RESISTANT, SPACED AS SHOWN ON DETAILS AND INSTALLED PER MANUF'S INSTRUCTIONS. SPECIFIED EMBEDMENT TO BASE MATERIAL SHALL BE BEYOND WALL DRESSING OR STUCCO.

A LOAD DURATION INCREASE IS USED IN DESIGN OF ANCHORS INTO WOOD ONLY.

ALL SHIMS TO BE HIGH IMPACT, NON-METALLIC AND NON-COMPRESSIBLE.

MATERIALS INCLUDING BUT NOT LIMITED TO STEEL/METAL SCREWS, THAT COME INTO CONTACT WITH OTHER DISSIMILAR MATERIALS SHALL MEET THE REQUIREMENTS OF THE 2017 FLORIDA BLDG. CODE & ADOPTED STANDARDS.

THIS PRODUCT APPROVAL IS GENERIC AND DOES NOT PROVIDE INFORMATION FOR A SITE SPECIFIC PROJECT, i.e. LIFE SAFETY OF THIS PRODUCT, ADEQUACY OF STRUCTURE RECEIVING THIS PRODUCT AND SEALING AROUND OPENING FOR WATER INFILTRATION RESISTANCE ETC.
CONDITIONS NOT SHOWN IN THIS DRAWING ARE TO BE ANALYZED SEPARATELY, AND TO BE REVIEWED BY BUILDING OFFICIAL.

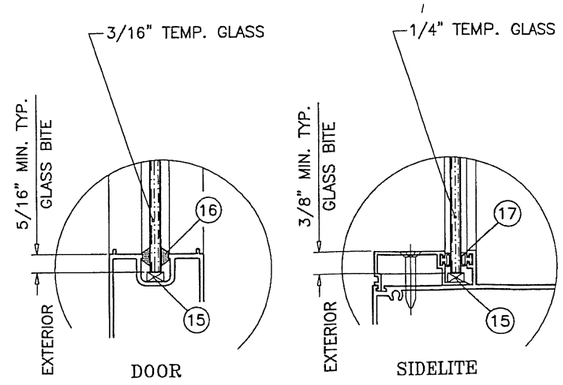

GLAZING DETAILS

DOORS NOT RATED FOR IMPACT.

INSTALLATION OF THIS PRODUCT IN THE HVHZ AREA REQUIRES THE USE OF APPROVED SHUTTERS OR EXTERNAL PROTECTION DEVICES COMPLYING WITH HVHZ REQUIREMENTS.

INSTALLATION OF THIS SYSTEM OUTSIDE THE HVHZ AREA SHALL MEET THE APPLICABLE REQUIREMENTS FOR WIND BORNE DEBRIS PROTECTION.

PRODUCT REVISED
as complying with the Florida Building Code
NOA-No. 18-0122.19
Expiration Date 09/14/2021
By
Miami-Dade Product Control

JAVAD AHMAD
LICENSE
No. 70592
APR 20 2018
STATE OF FLORIDA
PROFESSIONAL ENGINEER

AL-FAROOQ CORPORATION
ENGINEERS & PRODUCT DEVELOPMENT
9360 SUNSET DRIVE, SUITE 220
MIAMI, FLORIDA 33173 (C.A.N. 3538)
TEL. (305) 264-8100 FAX. (305) 262-6978

COMP-ANL\W98-58DAC

S-100 ALUM OUTSWING DOOR W/ SIDELITES (N.I.)

DORALUM CORPORATION
7040 N.W. 77 TERRACE
MIAMI, FL. 33166
TEL. (305) 884-3922 FAX (305) 884-1464

revisions:

no	date	by	description
G	06.25.15		UPDATED TO 2014 FBC
H	06.07.16		EDITORIAL CHANGES
I	01.09.18		UPDATED TO 2017 FBC
J	04.16.18		NO CHANGE THIS SHEET

date: 07-31-98
scale: 1/2"=1'-0"
dr. by: TARIQ
chk. by:

drawing no. W98-58

sheet 1 of 6

CHART 'A' (FOR X & XX DOORS)

DOORS WITHOUT SIDELITES			
DESIGN LOAD CAPACITY – PSF			
NOMINAL DIMS.		3/16" TEMP. GLASS	
NOM. WIDTH FT./IN.	NOM. HEIGHT FT./IN.	EXT.(+)	INT.(–)
2/6	6/8	67.3	91.3
2/8		67.0	85.6
2/10		63.0	80.6
3/0		59.5	76.1
2/6	7/0	67.3	86.9
2/8		63.8	81.5
2/10		60.0	76.7
3/0		56.7	72.4
2/6	8/0	59.5	76.1
2/8		55.8	71.3
2/10		52.5	67.1
3/0		49.6	63.4

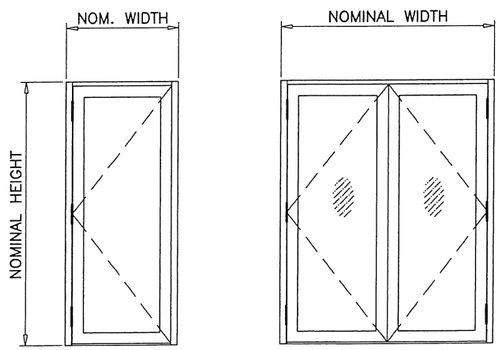

(X) (XX)

HEIGHTS:

NOMINAL HEIGHT	FRAME HEIGHT	LEAF HEIGHT	DAYLITE OPG.
6/8	79–3/4"	77–3/8"	69–3/8"
7/0	83–3/4"	81–3/8"	73–3/8"
8/0	95–3/4"	93–3/8"	85–3/8"

WIDTHS:

NOMINAL WIDTH	FRAME WIDTH	LEAF WIDTH	DAYLITE OPG.
2/6 (X)	31–1/2"	28–11/16"	20"
3/0 (X)	37–1/2"	34–11/16"	26"
5/0 (XX)	59–3/4"	28–11/16"	20"
6/0 (XX)	71–3/4"	34–11/16"	26"

CHART 'B'

SIDELITE AND 'O' PANEL CHART				
DESIGN LOAD CAPACITY – PSF				
FRAME HEIGHT FT./IN.	DOOR WIDTH FT./IN.	SIDELITE WIDTH INCHES	1/4" TEMP. GLASS	
			EXT. (+)	INT. (–)
6/8	3/0 (X) 6/0 (XX)	24	67.3	118.6
		30	67.3	107.8
		36	67.3	98.8
		42	67.3	88.4
		48	67.3	77.3
		49–1/2	67.3	75.0
7/0	3/0 (X) 6/0 (XX)	24	67.3	108.7
		30	67.3	99.6
		36	67.3	92.4
		42	67.3	86.5
		48	67.3	77.3
		49–1/2	67.3	75.0
8/0	3/0 (X) 6/0 (XX)	24	67.3	74.5
		30	67.3	68.3
		36	63.2	63.2
		42	59.1	59.1
		48	55.8	55.8

NOTE:
FOR DOORS CAPACITIES SEE CHART 'A'
FOR SIDELITE & 'O' PANEL CAPACITIES SEE CHART 'B'.
LOWER VALUES FROM DOOR OR SIDELITE CHART
WILL APPLY TO ENTIRE SYSTEM.

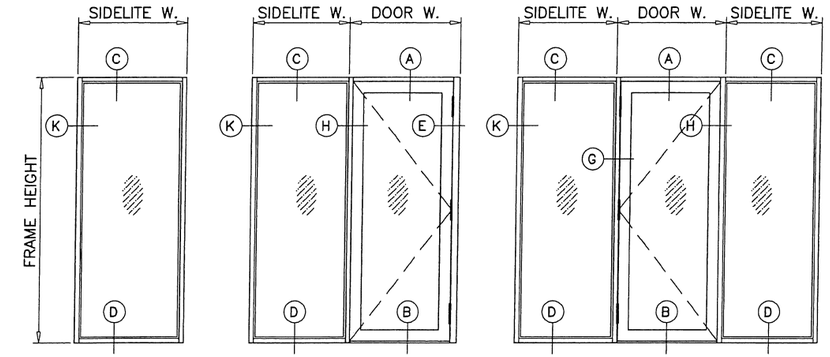

(O) (OX) (XO) (OXO)

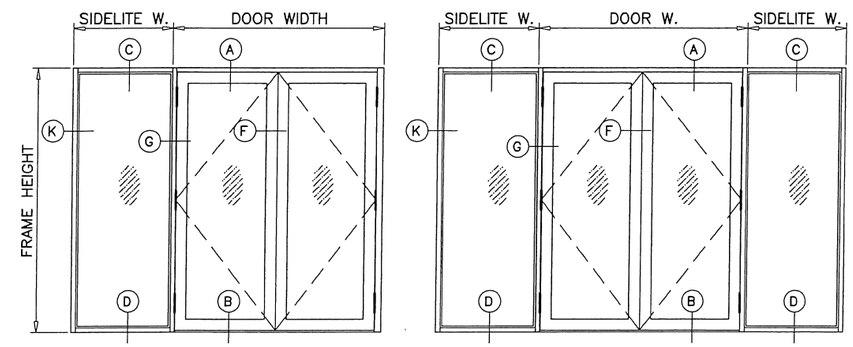

(OXX) (XXO) (OXXO)

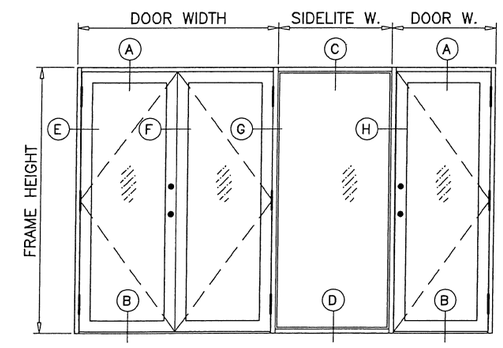

(XXOX)

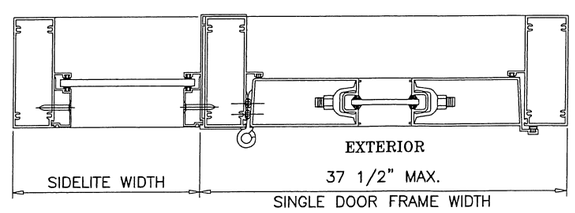

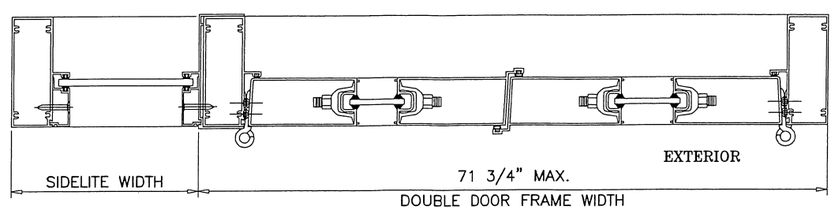

NOTE:
GLASS CAPACITIES ON THIS SHEET ARE
BASED ON ASTM E1300–09 (3 SEC. GUSTS)
AND FLORIDA BUILDING COMMISSION
DECLARATORY STATEMENT DCA05–DEC–219

PRODUCT REVISED
as complying with the Florida Building Code
NOA–No. 18-0122.19
Expiration Date 09/14/2021
By
Miami–Dade Product Control

JAVAD AHMAD
LICENSE
No. 70592
04-20-2018
STATE OF FLORIDA
PROFESSIONAL ENGINEER

AL-FAROOQ CORPORATION
ENGINEERS & PRODUCT DEVELOPMENT
9360 SUNSET DRIVE, SUITE 220
MIAMI, FLORIDA 33173 (C.A.N. 3538)
TEL. (305) 264-8100 FAX. (305) 262-6978

COMP–ANL\W98–58DAC

S–100 ALUM OUTSWING DOOR W/ SIDELITES (N.I.)

DORALUM CORPORATION
7040 N.W. 77 TERRACE
MIAMI, FL. 33166
TEL. (305) 884–3922 FAX (305) 884–1464

revisions:

no	date	by	description
G	06.25.15		UPDATED TO 2014 FBC
H	06.07.16		EDITORIAL CHANGES
I	01.09.18		NO CHANGE THIS SHEET
J	04.16.18		REV. PER RER COMMENTS

date: 07–31–98
scale: 1/2"=1'–0"
dr. by: TARIQ
chk. by:

drawing no. W98–58

sheet 2 of 6

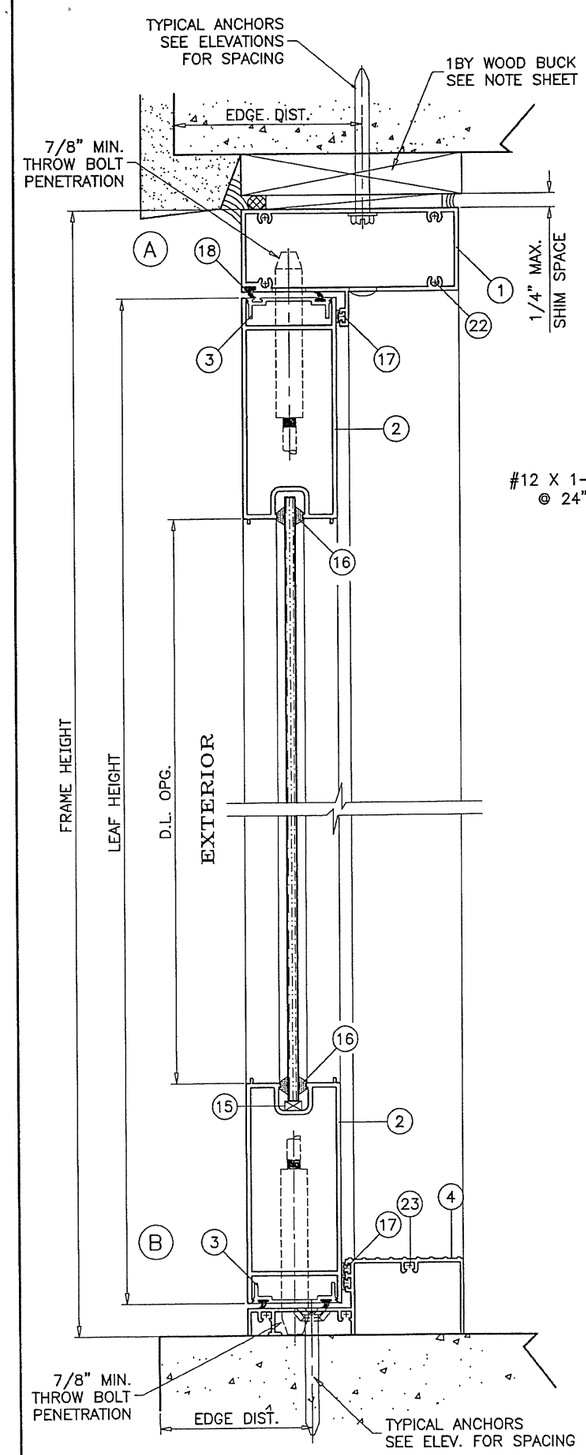

OUTSWING DOOR

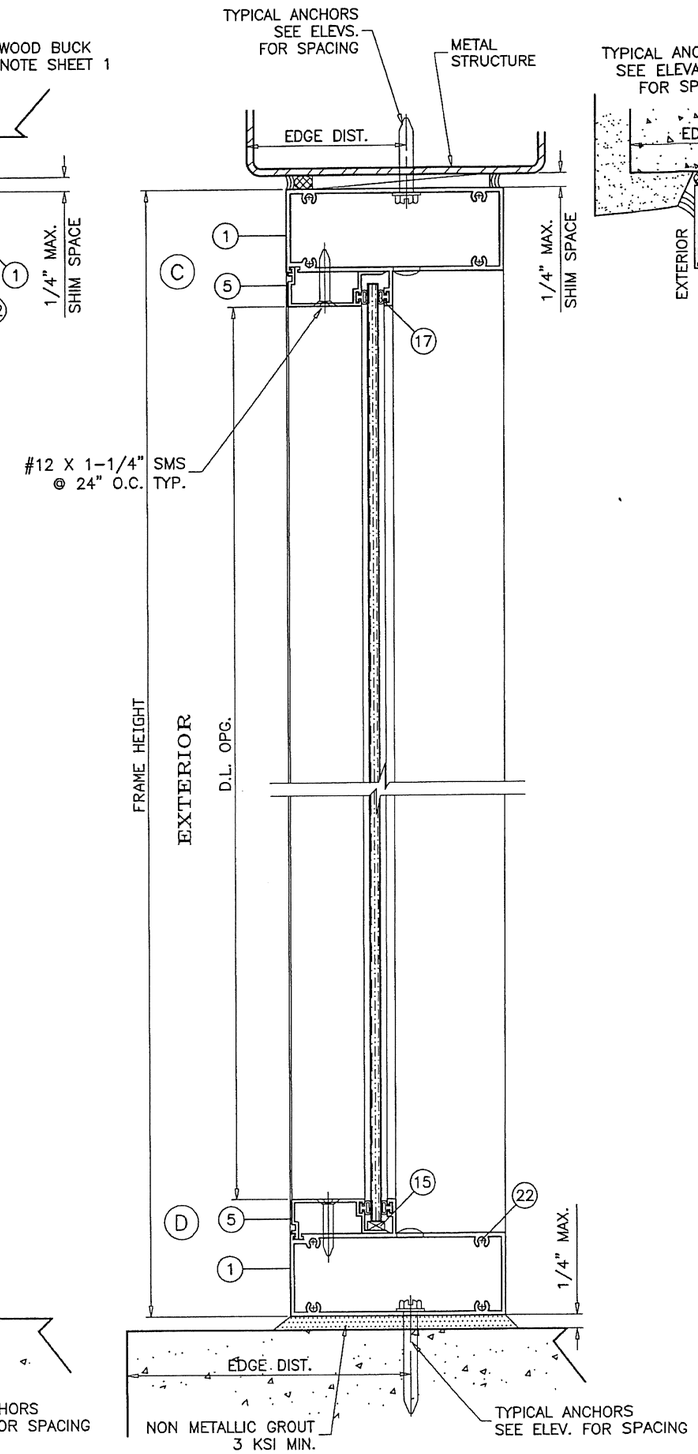

DIRECT SET SIDELITE

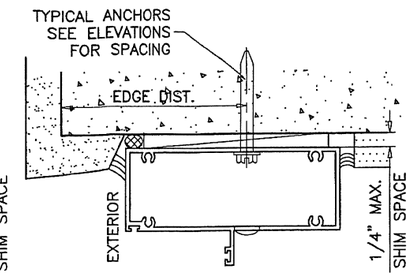

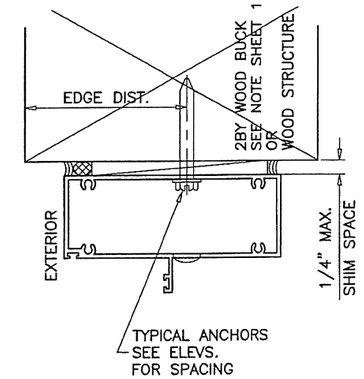

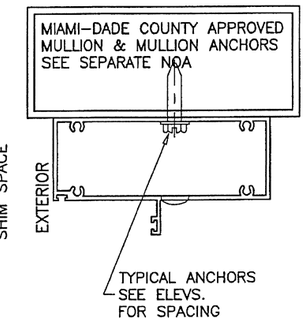

WOOD BUCKS AND METAL STRUCTURE NOT BY DORALUM MUST SUSTAIN LOADS IMPOSED BY GLAZING SYSTEM AND TRANSFER THEM TO THE BUILDING STRUCTURE.

TYPICAL ANCHORS: SEE ELEV. FOR SPACING

1/4" DIA. ULTRACON BY 'ELCO' (Fu=177 KSI, Fy=155 KSI)

INTO 2BY WOOD BUCKS OR WOOD STRUCTURES
1-1/2" MIN. PENETRATION INTO WOOD (HEAD/JAMBS)

THRU 1BY BUCKS INTO CONC. OR BLOCKS
1-1/4" MIN. EMBED INTO CONCRETE (HEAD/JAMBS)
1-1/4" MIN. EMBED INTO BLOCKS (JAMBS)

DIRECTLY INTO CONCRETE OR BLOCKS
1-3/4" MIN. EMBED INTO CONCRETE (HEAD/SILL)
1-1/4" MIN. EMBED INTO CONC. OR BLOCKS (JAMBS)

1/4" DIA. TEKS OR SELF-DRILLING SCREWS (GRADE 5 CRS)

INTO MIAMI-DADE COUNTY APPROVED MULLIONS
OR
INTO METAL STRUCTURES (HEAD/JAMBS)
(3) THREADS MIN. TO EXTEND BEYOND METAL THICKNESS
ALUMINUM: 1/8" THK. MIN. (6063-T5 MIN.)
STEEL: 1/8" THK. MIN. (Fy = 36 KSI MIN.)
(STEEL IN CONTACT WITH ALUMINUM TO BE PLATED OR PAINTED)

CRITICAL EDGE DISTANCE

INTO CONCRETE AND BLOCKS = 2-1/2" MIN.
INTO WOOD STRUCTURE = 1" MIN.
INTO METAL STRUCTURE = 3/4" MIN.

WOOD AT HEAD OR JAMBS SG = 0.55 MIN.
CONCRETE AT HEAD, SILL OR JAMBS f'c = 3000 PSI MIN.
C-90 HOLLOW/FILLED BLOCK AT JAMBS f'm = 2000 PSI MIN.

PRODUCT REVISED
as complying with the Florida Building Code
NOA-No. 18-0122.19
Expiration Date 09/14/2021
By
Miami-Dade Product Control

JAVAD AHMAD
LICENSE
No. 70592
APR 20 2018
STATE OF FLORIDA
PROFESSIONAL ENGINEER

AL-FAROOQ CORPORATION
ENGINEERS & PRODUCT DEVELOPMENT
9360 SUNSET DRIVE, SUITE 220
MIAMI, FLORIDA 33173 (C.A.N. 3538)
TEL. (305) 264-8100 FAX. (305) 262-6978

COMP-ANL\W98-58DAC

S-100 ALUM OUTSWING DOOR W/ SIDELITES (N.I.)

DORALUM CORPORATION
7040 N.W. 77 TERRACE
MIAMI, FL. 33166
TEL. (305) 884-1464 FAX (305) 884-3922

revisions:

no	date	by	description
G	06.25.15		UPDATED TO 2014 FBC
H	06.07.16		EDITORIAL CHANGES
I	01.09.18		UPDATED TO 2017 FBC
J	04.16.18		NO CHANGE THIS SHEET

date: 07-31-98
scale: 3/8" = 1"
dr. by: TARIQ
chk. by:

drawing no. W98-58

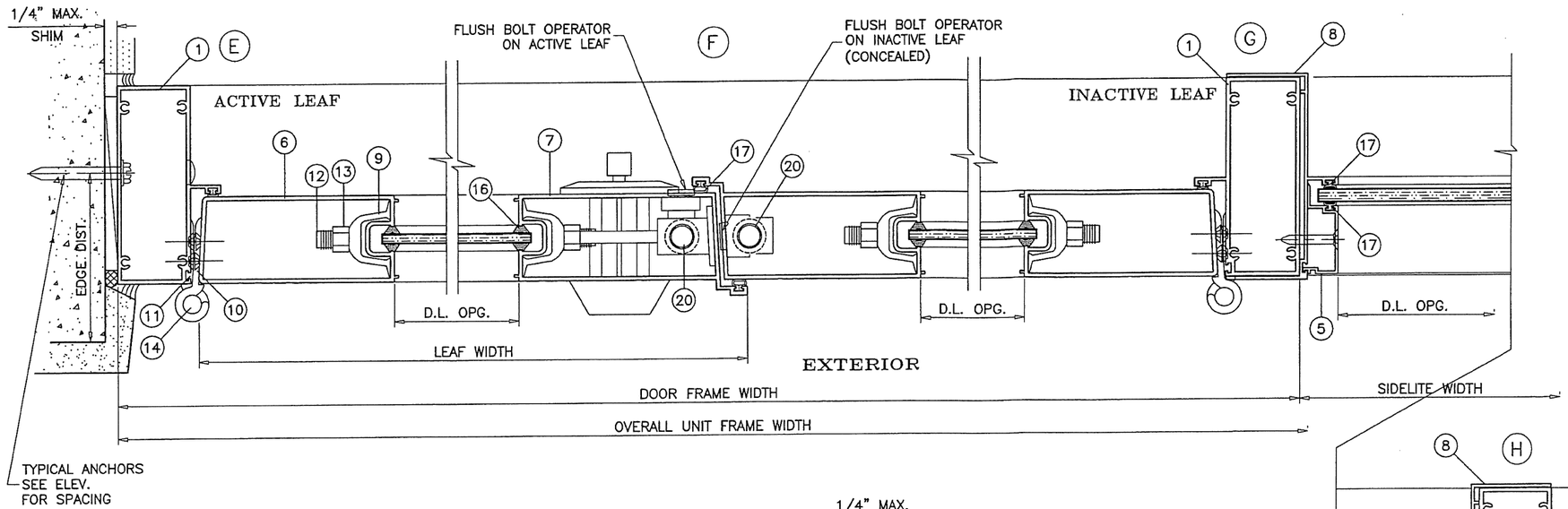

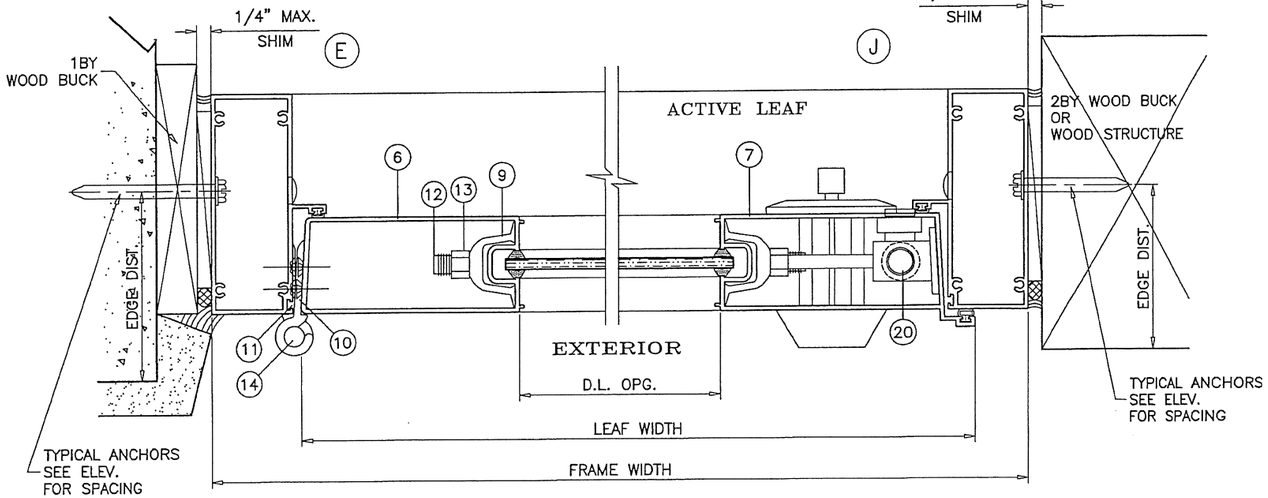

SINGLE LEAF (X) DOOR

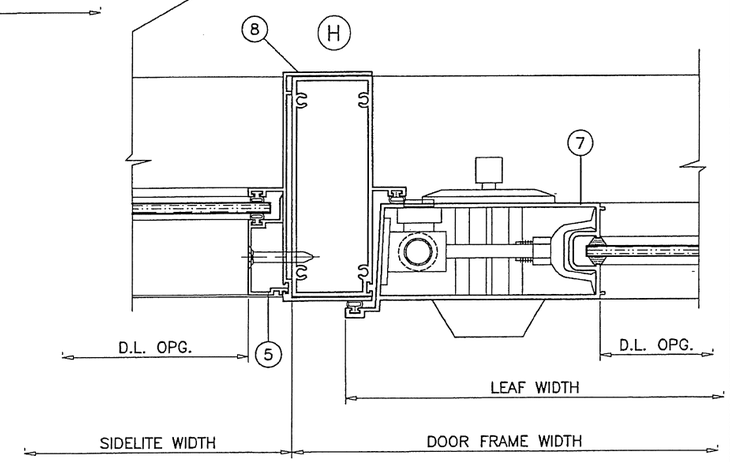

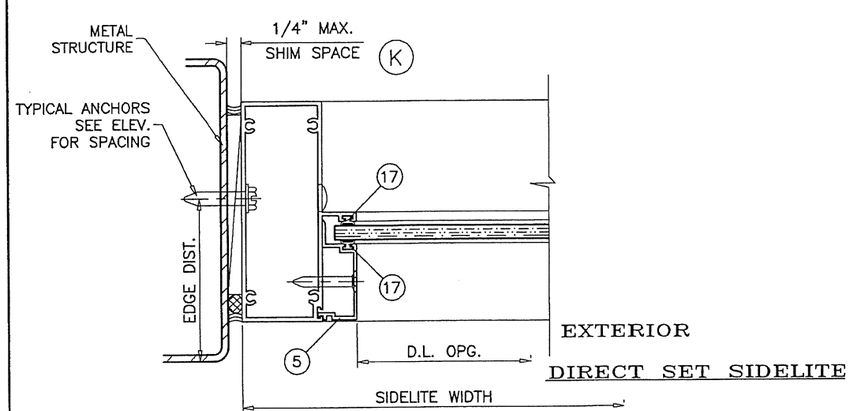

DIRECT SET SIDELITE

PRODUCT REVISED
as complying with the Florida Building Code
NOA-No. 18-0122.19
Expiration Date 09/14/2021
By
Miami-Dade Product Control

JAVAD AHMAD LICENSE No. 70592 STATE OF FLORIDA PROFESSIONAL ENGINEER
APR 20 2018

AL-FAROOQ CORPORATION
ENGINEERS & PRODUCT DEVELOPMENT
9360 SUNSET DRIVE, SUITE 220
MIAMI, FLORIDA 33173 (C.A.N. 3538)
TEL. (305) 264-8100 FAX. (305) 262-6978

COMP-ANL\W98-58DAC

S-100 ALUM OUTSWING DOOR W/ SIDELITES (N.I.)

DORALUM CORPORATION
7040 N.W. 77 TERRACE
MIAMI, FL. 33166
TEL. (305) 884-3922 FAX (305) 884-1464

revisions:

no	date	by	description
G	06.25.15		NO CHANGE THIS SHEET
H	06.07.16		EDITORIAL CHANGES
I	01.09.18		NO CHANGE THIS SHEET
J	04.16.18		NO CHANGE THIS SHEET

date: 07-31-98
scale: 3/8" = 1"
dr. by: TARIQ
chk. by:

drawing no. W98-58

sheet 4 of 6

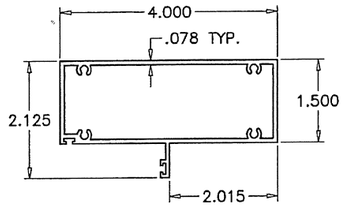

(1) FRAME HEAD/JAMB

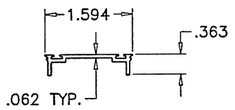

(3) WEATHERSTRIP ADAPTER

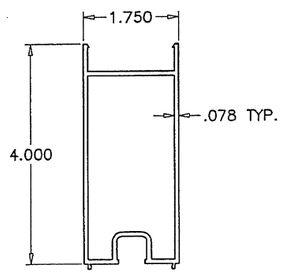

(2) TOP/BOTTOM RAIL

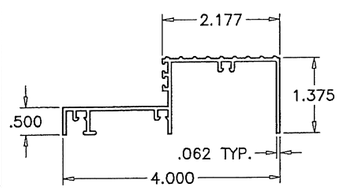

(4) THRESHOLD

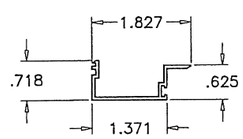

(5) SIDE LITE GLAZING BEAD

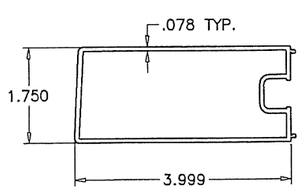

(6) HINGE STILE

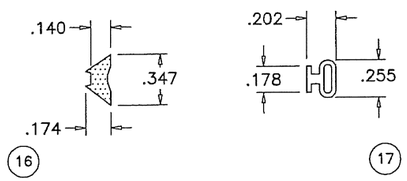

(16) (17)

HARDNESS = 75 SHORE A
TENSILE STRENGTH = 1640 PSI
ELONGATION AT BREAK = 340%
TEAR STRENGTH = 233 PPI
SPECIFIC GRAVITY = 1.45

GLAZING GASKETS
SCALE 1:1

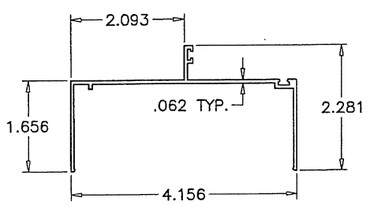

(8) SIDE LITE JAMB

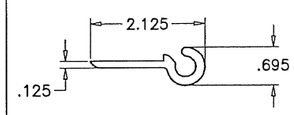

(10) HINGE

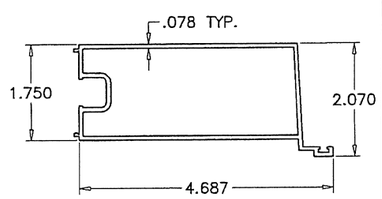

(7) LOCK STILE

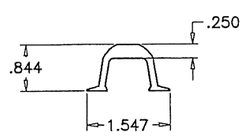

(9) ASSEMBLY STIFFENER

ITEM #	PART #	REQD.	DESCRIPTION	MATERIALS/REMARKS
1	SW-28899	3/DOOR	FRAME HEAD/JAMB	6063-T6
2	SW-28900	2/LEAF	DOOR TOP/BOTTOM RAIL	6061-T6
3	SW-28904	AS REQD.	WEATHERSTRIP ADAPTER	6063-T6
4	SW-28898	1/DOOR	THRESHOLD	6063-T6
5	SW-28902	AS REQD.	SIDE LITE GLAZING BEAD	6063-T6
6	SW-28896	1/LEAF	HINGE STILE	6063-T6
7	SW-28901	1/LEAF	LOCK STILE	6063-T6
8	SW-28897	AS REQD.	SIDELITE JAMB	6063-T6
9	SW-28903	1/CORNER	ASSEMBLY STIFFENER	6063-T6
10	SW-29244	3/LEAF	HINGE DOOR PORTION	6063-T5
11	SW-29245	3/LEAF	HINGE FRAME PORTION	6063-T5
12	–	2/LEAF	3/8" X 16 X 32" LONG THREADED ROD	STEEL
13	–	2/LEAF	3/8" X 16 NUT	–
14	–	1/HINGE	5/16" X 6" ROD	PLATED STEEL
15	–	2/LITE	1/4" SETTING BLOCK	EPDM, DUROMETER 80±5 SHORE A
16	PW-100	AS REQD.	GLAZING WEDGE	VINYL
17	PW-101	AS REQD.	BULB WEATHERSTRIPPING	VINYL
18	PB-8400	AS REQD.	PILE WEATHERSTRIPPING	SCHLEGEL
19	SILICONE PLUS	–	SILICONE	DOWSIL OR EQUIV.
20	5025	AS REQD.	FLUSH BOLTS	DELTA IND. OR EQUIV.
21	CP-B111	–	ENTRY LOCKSET	TACO OR WESTLOCK
22	#8X1" PHPS	4/ CORNER	ASSEMBLY SCREWS	FRAME HEAD CORNERS
23	#8X2-1/2" PHPS	3/ CORNER	ASSEMBLY SCREWS	FRAME SILL CORNERS

LOCKS:

STANDARD STEEL THROW BOLT LOCK, KEY OPERATED ON EXTERIOR AND THUMB TURN ON INTERIOR AT EACH ACTIVE LEAF LOCK STILE, 53" FROM BOTTOM

CONVENTIONAL LOCKSET WITH KNOB, KEY OPERATED ON EXTERIOR AND THUMB TURN ON INTERIOR AT EACH ACTIVE LEAF LOCK STILE, 43" FROM BOTTOM

(20) FLUSH MOUNT CONCEALED FLUSH BOLTS AT ACTIVE AND INACTIVE LEAF LOCK STILES,
MANUALLY OPERATED LEVERS LOCATED AT 11-1/2" FROM BOTTOM AND 20" FROM TOP.
EACH FASTENED WITH (2) #8 X 1/2" FH MACHINE SCREW

HINGES:

EXTRUDED ALUMINUM BUTT HINGE
1/8" THICK AND 7-1/2" LONG WITH 5/16" PLATED STEEL ROD AT EACH LEAF JAMB STILE ONE EACH AT 7" FROM TOP & BOTTOM AND ONE AT MIDSPAN

SEALANTS:

FRAME AND LEAF CORNERS, INSTALLATION SCREWS AT SILL AND ALL METAL PARTS CONNECTIONS SEALED WITH CLEAR COLORED SEALANT.

PRODUCT REVISED
as complying with the Florida Building Code
NOA-No. 18-0122.19
Expiration Date 09/14/2021
By
Miami-Dade Product Control

JAWAD AHMAD
LICENSE
No. 70592
APR 20 2018
STATE OF FLORIDA
PROFESSIONAL ENGINEER

AL-FAROOQ CORPORATION
ENGINEERS & PRODUCT DEVELOPMENT
9360 SUNSET DRIVE, SUITE 220
MIAMI, FLORIDA 33173 (C.A.N. 3538)
TEL. (305) 264-8100 FAX. (305) 262-6978

COMP-ANL\W98-58DAC

S-100 ALUM OUTSWING DOOR W/ SIDELITES (N.I.)

DORALUM CORPORATION
7040 N.W. 77 TERRACE
MIAMI, FL. 33166
TEL. (305) 884-3922 FAX (305) 884-1464

revisions:

no	date	by	description
G	06.25.15		UPDATED TO 2014 FBC
H	06.07.16		EDITORIAL CHANGES
I	01.09.18		NO CHANGE THIS SHEET
J	04.16.18		NO CHANGE THIS SHEET

date: 07-31-98
scale: 3/8" = 1"
dr. by: TARIQ
chk. by:

drawing no.
W98-58

sheet 5 of 6

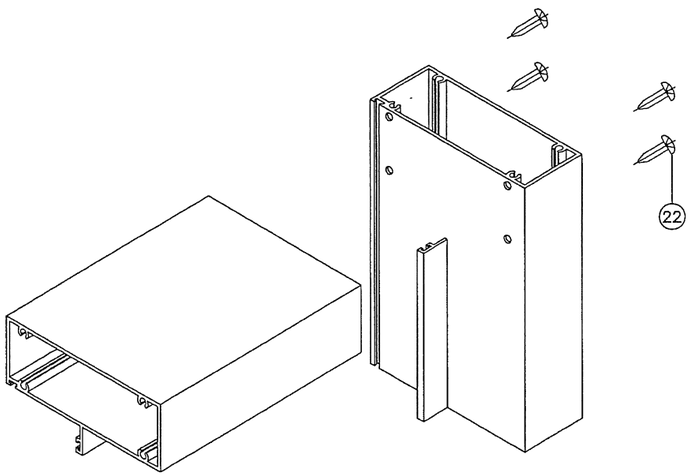

FRAME TOP CORNER

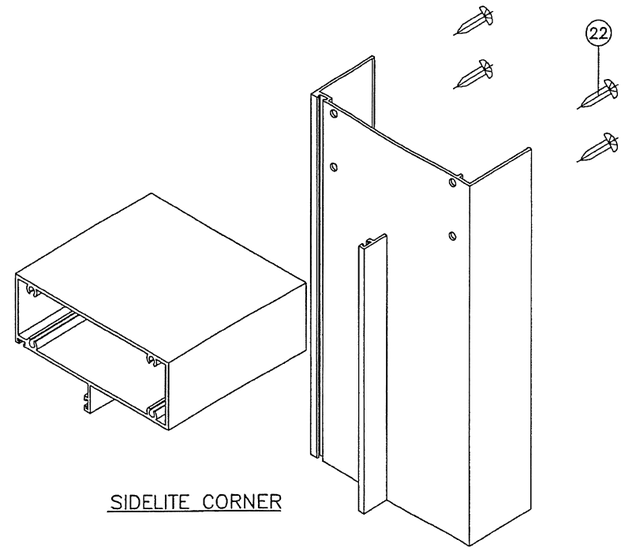

SIDELITE CORNER

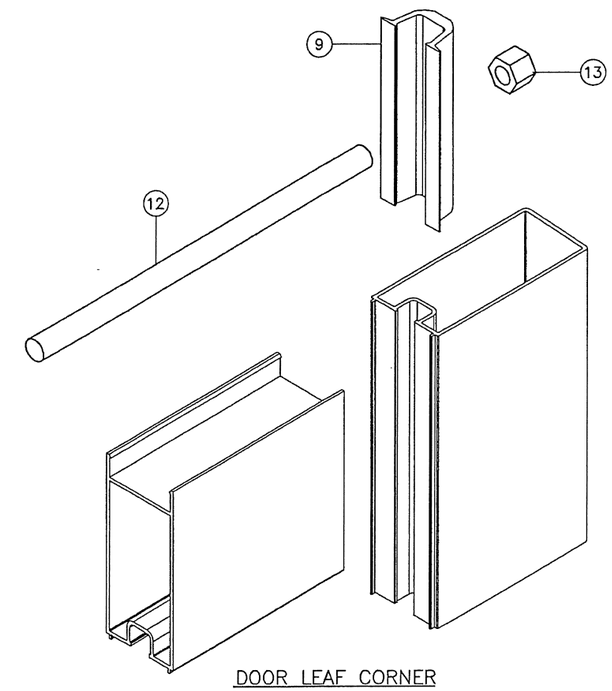

DOOR LEAF CORNER

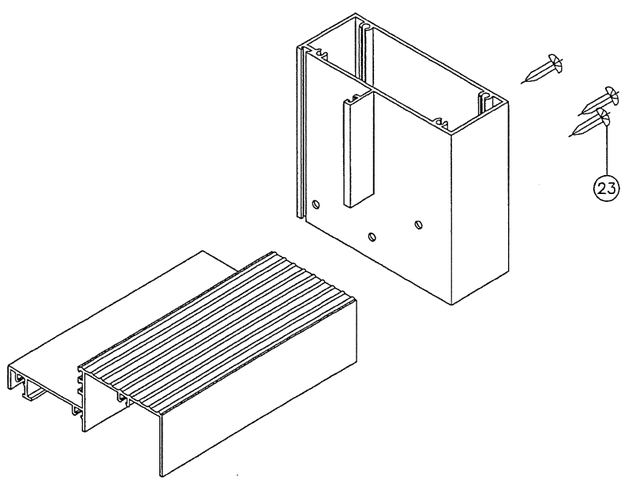

FRAME BOTTOM CORNER

PRODUCT REVISED
as complying with the Florida Building Code
NOA-No. 18-0122.19

Expiration Date 09/14/2021

By
Miami-Dade Product Control

JAVAD AHMAD
LICENSE
No. 70592
APR 20 2018
STATE OF FLORIDA
PROFESSIONAL ENGINEER

AL-FAROOQ CORPORATION
ENGINEERS & PRODUCT DEVELOPMENT
9360 SUNSET DRIVE, SUITE 220
MIAMI, FLORIDA 33173 (C.A.N. 3538)
TEL. (305) 264-8100 FAX. (305) 262-6978

COMP-ANL\W98-58DAC

S-100 ALUM OUTSWING DOOR W/ SIDELITES (N.I.)

DORALUM CORPORATION
7040 N.W. 77 TERRACE
MIAMI, FL. 33166
TEL. (305) 884-3922 FAX (305) 884-1464

revisions:

no	date	by	description
G	06.25.15		NO CHANGE THIS SHEET
H	06.07.16		EDITORIAL CHANGES
I	01.09.18		NO CHANGE THIS SHEET
J	04.16.18		NO CHANGE THIS SHEET

date: 07-31-98
scale: 3/8" = 1"
dr. by: TARIQ
chk. by:

drawing no.
W98-58

sheet 6 of 6