MIAMI-DADE COUNTY
DEPARTMENT OF REGULATORY AND ECONOMIC RESOURCES (RER)
BOARD AND CODE ADMINISTRATION DIVISION

MIAMI-DADE COUNTY
PRODUCT CONTROL SECTION
11805 SW 26 Street, Room 208
T (786) 315-2590 F (786) 315-2599
www.miamidade.gov/economy

NOTICE OF ACCEPTANCE (NOA)

Curv-A-Tech Corporation
930 West 23rd Street
Hialeah, FL 33010

SCOPE:

This NOA is being issued under the applicable rules and regulations governing the use of construction materials. The documentation submitted has been reviewed and accepted by Miami-Dade County RER - Product Control Section to be used in Miami Dade County and other areas where allowed by the Authority Having Jurisdiction (AHJ).

This NOA shall not be valid after the expiration date stated below. The Miami-Dade County Product Control Section (In Miami-Dade County) and/ or the AHJ (in areas other than Miami-Dade County) reserve the right to have this product or material tested for quality assurance purposes. If this product or material fails to perform in the accepted manner, the manufacturer will incur the expense of such testing and the AHJ may immediately revoke, modify, or suspend the use of such product or material within their jurisdiction. RER reserves the right to revoke this acceptance, if it is determined by Miami-Dade County Product Control Section that this product or material fails to meet the requirements of the applicable building code.

This product is approved as described herein, and has been designed to comply with the Florida Building Code, including the High Velocity Hurricane Zone.-

DESCRIPTION: Extruded Aluminum Tube Mullion – L.M.I.

APPROVAL DOCUMENT: Drawing No. **M95-19A**, titled "Aluminum Tube Mullions", sheets 1 through 6 of 6, dated 12/07/95, with revision **G** dated 01/11/18, prepared by Al-Farooq Corporation, signed and sealed by Javad Ahmad, P.E., bearing the Miami-Dade County Product Control Revision stamp with the Notice of Acceptance number and expiration date by the Miami-Dade County Product Control Section.

MISSILE IMPACT RATING: Large and Small Missile Impact Resistant

LABELING: Each unit shall bear a permanent label with the manufacturer's name or logo, city, state, model/ series, and following statement: "Miami-Dade County Product Control Approved", unless otherwise noted herein.

RENEWAL of this NOA shall be considered after a renewal application has been filed and there has been no change in the applicable building code negatively affecting the performance of this product.

TERMINATION of this NOA will occur after the expiration date or if there has been a revision or change in the materials, use, and/ or manufacture of the product or process. Misuse of this NOA as an endorsement of any product, for sales, advertising or any other purposes shall automatically terminate this NOA. Failure to comply with any section of this NOA shall be cause for termination and removal of NOA.

ADVERTISEMENT: The NOA number preceded by the words Miami-Dade County, Florida, and followed by the expiration date may be displayed in advertising literature. If any portion of the NOA is displayed, then it shall be done in its entirety.

INSPECTION: A copy of this entire NOA shall be provided to the user by the manufacturer or its distributors and shall be available for inspection at the job site at the request of the Building Official.

This NOA **revises and renews NOA# 15-0603.18** and consists of this page 1 and evidence pages E-1 and E-2, as well as approval document mentioned above.

The submitted documentation was reviewed by **Sifang Zhao, P.E.**

MIAMI-DADE COUNTY APPROVED

S. Z.
01/16/2018

Curv-A-Tech Corporation

NOTICE OF ACCEPTANCE: EVIDENCE SUBMITTED

1. EVIDENCE SUBMITTED UNDER PREVIOUS NOAs

A. DRAWINGS

1. Manufacturer's die drawings and sections.
   (Submitted under NOA's No. 08-0813.08 and 97-0423.05)
2. Drawing No. **M95-19A**, titled "Aluminum Tube Mullions", sheets 1 through 6 of 6, dated 12/07/95, revision **F**, dated 01/29/16, prepared by Al-Farooq Corporation, signed and sealed by Javad Ahmad, P.E.

B. TESTS

1. Test reports on: 1) Uniform Static Air Pressure Test, Loading per FBC, TAS 202-94
   2) Large Missile Impact Test per FBC, TAS 201-94
   3) Cyclic Wind Pressure Loading per FBC, TAS 203-94
   along with marked-up drawings and installation diagram of aluminum fixed windows mulled together, prepared by Fenestration Testing Laboratory, Inc., Test Report No. **FTL-5636**, dated 06/12/08, signed and sealed by Carlos S. Rionda, P.E.
   (Submitted under NOA# 08-0813.08)
2. Test reports on: 1) Uniform Static Air Pressure Test, Loading per PA 202-94
   along with installation diagram of aluminum fixed windows mulled together, prepared by Hurricane Engineering & Testing Inc., Test Report No. **HETI-96-1054**, dated 02/01/96 signed and sealed by Hector Medina, P.E.
   (Submitted under NOA# 97-0423.05)

C. CALCULATIONS

1. Anchor verification calculations and structural analysis, complying with **FBC 5th Edition (2014)**, dated 02/09/16, prepared by Al-Farooq Corporation, signed and sealed by Javad Ahmad, P.E.

D. QUALITY ASSURANCE

1. Miami-Dade Department of Regulatory and Economic Resources (RER).

E. MATERIAL CERTIFICATIONS

1. None.

F. STATEMENTS

1. Statement letter of conformance, complying with **FBC-5th Edition (2014)**, and of no financial interest, dated May 29, 2015, issued by Al-Farooq Corporation, signed and sealed by Javad Ahmad, P.E.
2. Laboratory compliance letter for Test Report No. **FTL-5636** issued by Fenestration Testing Laboratory, Inc., dated 06/12/08, signed and sealed by Carlos S. Rionda, P.E.
   (Submitted under NOA No. 08-1024.06)

Sifang Zhao, P.E.
Product Control Examiner
NOA No. 18-0129.15
Expiration Date: March 28, 2023
Approval Date: February 22, 2018

NOTICE OF ACCEPTANCE: EVIDENCE SUBMITTED

F. STATEMENTS CONTINUED

3. Laboratory compliance letter for Test Report No. **HETI-96-1054** issued by Hurricane Engineering & Testing, Inc., dated 02/01/96 signed and sealed by Hector Medina, P.E. ***(Submitted under NOA No. 97-0423.05)***

G. OTHERS

1. Notice of Acceptance No. **12-0430.02**, issued to Curv-A-Tech Corporation for their Extruded Aluminum Tube Mullion – L.M.I., approved on 08/02/12 and expiring on 03/28/18.

2. NEW EVIDENCE SUBMITTED

A. DRAWINGS

1. Drawing No. **M95-19A**, titled "Aluminum Tube Mullions", sheets 1 through 6 of 6, dated 12/07/95, revision **G**, dated 01/11/18, prepared by Al-Farooq Corporation, signed and sealed by Javad Ahmad, P.E.

C. TESTS

1. None

D. CALCULATIONS

1. Anchor verification calculations and structural analysis, complying with **FBC 6th Edition (2017)**, dated 01/23/18, prepared by Al-Farooq Corporation, signed and sealed by Javad Ahmad, P.E.

E. QUALITY ASSURANCE

1. Miami-Dade Department of Regulatory and Economic Resources (RER).

G. MATERIAL CERTIFICATIONS

1. None.

H. STATEMENTS

1. Statement letter of conformance, complying with **FBC 6th Edition (2017)**, and of no financial interest, dated January 09, 2018, issued by Al-Farooq Corporation, signed and sealed by Javad Ahmad, P.E.

G. OTHERS

1. Notice of Acceptance No. **15-0603.18**, issued to Curv-A-Tech Corporation for their Extruded Aluminum Tube Mullion - L.M.I., approved on 02/18/16 and expiring on 03/28/18

Sifang Zhao, P.E.
Product Control Examiner
NOA No. 18-0129.15
Expiration Date: March 28, 2023
Approval Date: February 22, 2018

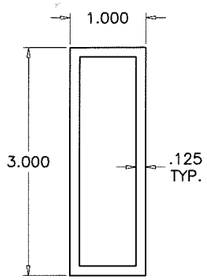

1 X 3 X 1/8"
TUBE MULLION
6063–T6

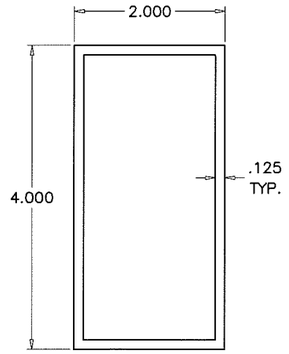

2 X 4 X 1/8"
TUBE MULLION
6063–T6

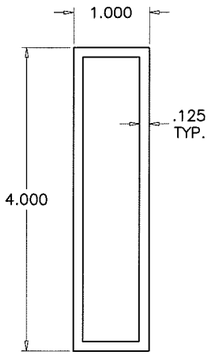

1 X 4 X 1/8"
TUBE MULLION
6063–T6

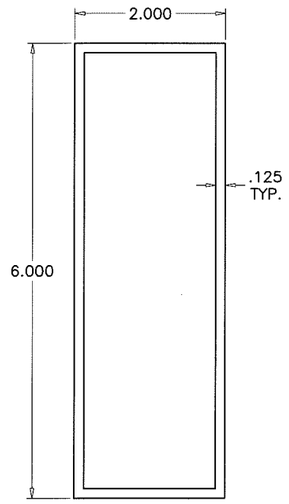

2 X 6 X 1/8"
TUBE MULLION
6063–T6

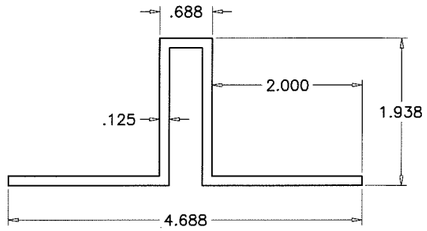

MULLION CLIP (6063–T6)
CLIP LENGTHS MUST BE CUT TO FIT SNUG INTO TUBE MULLIONS.

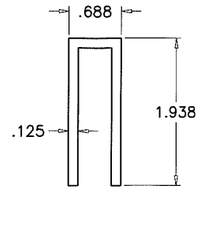

MULLION CLIP
LEGS REMOVED

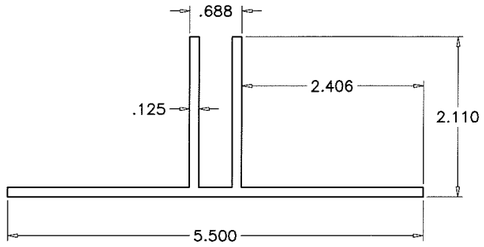

MULLION CLIP (6063–T6)
CLIP LENGTHS MUST BE CUT TO FIT SNUG INTO TUBE MULLIONS.

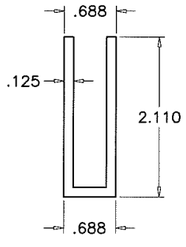

MULLION CLIP
LEGS REMOVED

MULLION CLIP (6063–T6)
CLIP LENGTHS MUST BE CUT TO FIT SNUG INTO TUBE MULLIONS.

MULLION CLIP
LEGS REMOVED

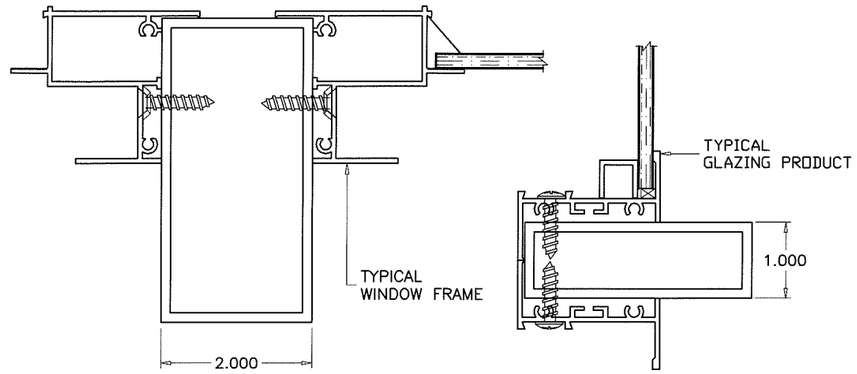

MULLIONS CONTAINING TYPICAL GLAZING PRODUCTS HORIZONTAL OR VERTICAL

SEE WINDOW OR DOOR APPROVAL FOR FASTENERS SIZES AND SPACING

MULLION SYSTEM IS RATED FOR LARGE MISSILE IMPACT.
AND CAN BE USED WITH ALL MIAMI–DADE COUNTY APPROVED IMPACT AND NON–IMPACT RESISTANT PRODUCTS.

RECTANGULAR ALUMINUM TUBE MULLIONS USING MULLION PROPERTIES ONLY

NOTES:

THIS PRODUCT HAS BEEN DESIGNED AND TESTED TO COMPLY WITH THE REQUIREMENTS OF THE 2017 (6TH EDITION) FLORIDA BUILDING CODE INCLUDING HIGH VELOCITY HURRICANE ZONE (HVHZ).

ALL GLAZING PRODUCTS USED WITH THESE MULLIONS MUST MEET THE APPLICABLE BUILDING CODE REQUIREMENTS I.E: WIND LOAD, WATER INFILTRATION, FORCED ENTRY RESISTANCE, SAFEGUARDS ETC.

1BY OR 2BY WOOD BUCKS & BUCK FASTENERS BY OTHERS, MUST BE DESIGNED AND INSTALLED ADEQUATELY TO TRANSFER APPLIED PRODUCT LOADS TO THE BUILDING STRUCTURE.

ANCHORS SHALL BE CORROSION RESISTANT, SPACED AS SHOWN ON DETAILS AND INSTALLED PER MANUF'S INSTRUCTIONS. SPECIFIED EMBEDMENT TO BASE MATERIAL SHALL BE BEYOND WALL DRESSING OR STUCCO.

A LOAD DURATION INCREASE IS USED IN DESIGN OF ANCHORS INTO WOOD ONLY.

ALL SHIMS TO BE HIGH IMPACT, NON–METALLIC AND NON–COMPRESSIBLE.

MATERIALS INCLUDING BUT NOT LIMITED TO STEEL/METAL SCREWS, THAT COME INTO CONTACT WITH OTHER DISSIMILAR MATERIALS SHALL MEET THE REQUIREMENTS OF THE 2017 FLORIDA BLDG. CODE & ADOPTED STANDARDS.

THIS PRODUCT APPROVAL IS GENERIC AND DOES NOT PROVIDE INFORMATION FOR A SITE SPECIFIC PROJECT, i.e. LIFE SAFETY OF THIS PRODUCT, ADEQUACY OF STRUCTURE RECEIVING THIS PRODUCT AND SEALING AROUND OPENING FOR WATER INFILTRATION RESISTANCE ETC.
CONDITIONS NOT SHOWN IN THIS DRAWING ARE TO BE ANALYZED SEPARATELY, AND TO BE REVIEWED BY BUILDING OFFICIAL.

INSTRUCTIONS:

USE CHARTS AND GRAPHS AS FOLLOWS.

STEP 1	DETERMINE DESIGN LOAD REQUIRED PER ASCE 7 FOR PARTICULAR OPENING.
STEP 2	USE DADE COUNTY APPROVED GLAZING PRODUCTS MEETING ABOVE LOAD REQUIREMENTS.
STEP 3	USE CONNECTION TO MULLION AS PER PRODUCT APPROVAL.
STEP 4	USING GRAPHS ON SHEET 2 SELECT MULLION SIZE WITH DESIGN RATING MORE THAN DESIGN LOAD SPECIFIED IN STEP 1 ABOVE.
STEP 5	USING ANCHOR TYPES ON SHEETS 4 & 5, AND ANCHOR GRAPHS ON SHEET 3, SELECT ANCHOR TYPE WITH DESIGN RATING MORE THAN THE DESIGN LOADS SPECIFIED IN STEP 1 ABOVE.

THIS NOA IS NOT VALID WITHOUT CORPORATE SEAL OF CURV–A–TECH CORPORATION AND A LABEL AFFIXED.

PRODUCT REVISED
as complying with the Florida Building Code
Acceptance No 18-0129.15
Expiration Date 03/28/2023
By
Miami Dade Product Control

JAVAD AHMAD LICENSE No. 70582 STATE OF FLORIDA PROFESSIONAL ENGINEER
JAN 23 2018

AL-FAROOQ CORPORATION
ENGINEERS & PRODUCT DEVELOPMENT
9360 SUNSET DRIVE, SUITE 220
MIAMI, FLORIDA 33173 (C.A.N. 3538)
TEL. (305) 264-8100 FAX. (305) 262-6978

MULLION\M95–19A–CC

ALUMINUM TUBE MULLIONS

CURV–A–TECH CORPORATION
930 W. 23rd STREET
HIALEAH, FL 33010
TEL. (305) 888–9631 FAX. (305) 888–9969

revisions:

no	date	by	description
C	07.24.08		UPDATED FOR 2007 FBC
D	04.12.12		UPDATED TO 2010 FBC
E	05.18.15		UPDATED TO 2014 FBC
F	01.29.16		REV. PER RER COMMENTS
G	01.11.18		UPDATED TO 2017 FBC

date: 12–07–95
scale: 1/2" = 1"
dr. by: TARIQ
chk. by:

drawing no.
M95–19A

sheet 1 of 6

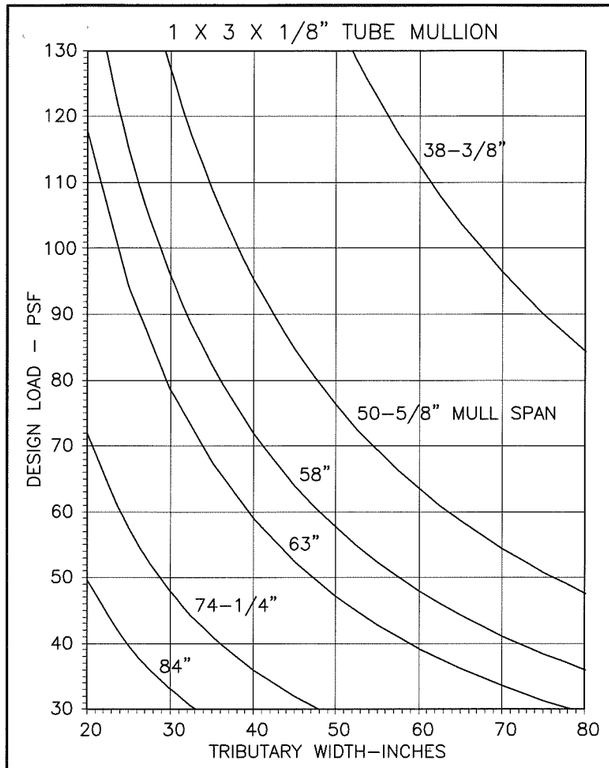

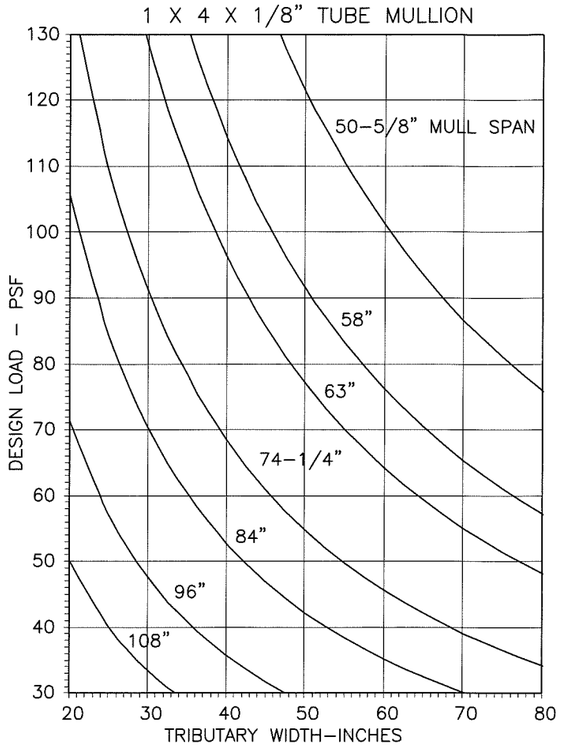

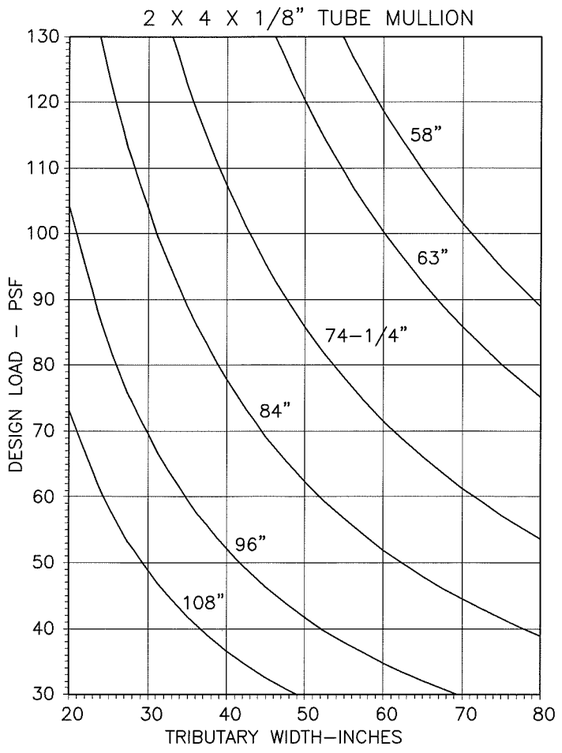

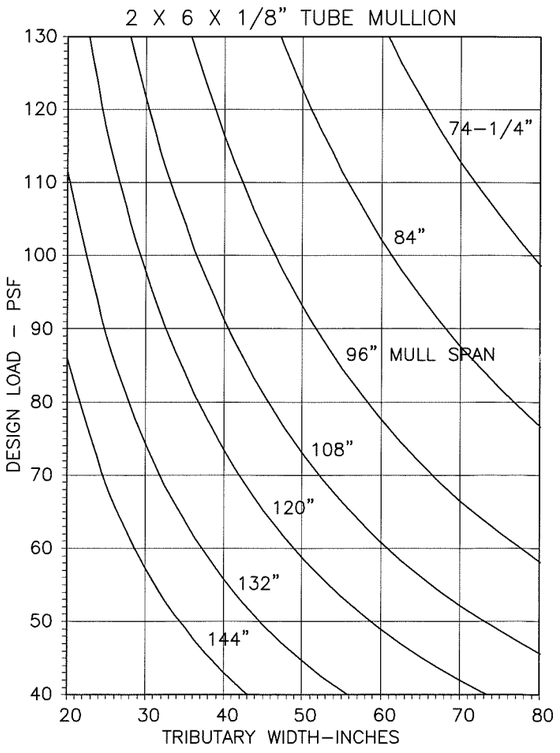

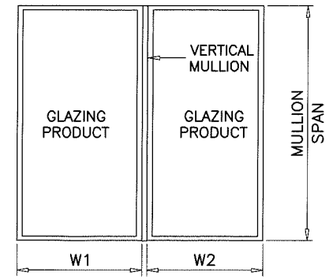

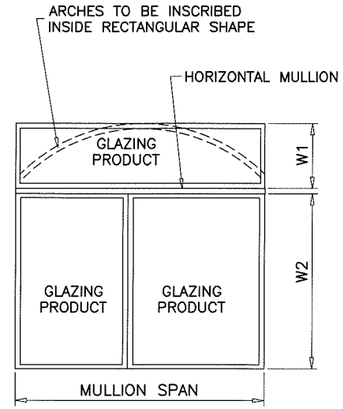

TYPICAL MULLION ARRANGEMENTS

$$\text{WIDTH (W)} = \frac{W1 + W2}{2}$$

NOTE:
MULLIONS RATED IN THESE CHARTS MAY BE ORIENTED VERTICALLY OR HORIZONTALLY. (INTERPOLATION BETWEEN WIDTHS ALLOWED)

MULLIONS

PRODUCT REVISED
as complying with the Florida Building Code
Acceptance No 18-0129.15
Expiration Date 03/28/2023
By
Miami Dade Product Control

JAVAD AHMAD LICENSE No. 70592 STATE OF FLORIDA PROFESSIONAL ENGINEER JAN 23 2018

AL-FAROOQ CORPORATION
ENGINEERS & PRODUCT DEVELOPMENT
9360 SUNSET DRIVE, SUITE 220
MIAMI, FLORIDA 33173 (C.A.N. 3538)
TEL. (305) 264-8100 FAX. (305) 262-6978

MULLION\M95-19A-CC

ALUMINUM TUBE MULLIONS

CURV-A-TECH CORPORATION
930 W. 23rd STREET
HIALEAH, FL 33010
TEL. (305) 888-9631 FAX. (305) 888-9969

revisions:

no	date	by	description
C	07.24.08		UPDATED FOR 2007 FBC
D	04.12.12		NO CHANGE THIS SHEET
E	05.18.15		UPDATED TO 2014 FBC
F	01.29.16		REV. PER RER COMMENTS
G	01.11.18		UPDATED TO 2017 FBC

date: 12-07-95
scale: 1/2" = 1"
dr. by: TARIQ
chk. by:

drawing no.
M95-19A

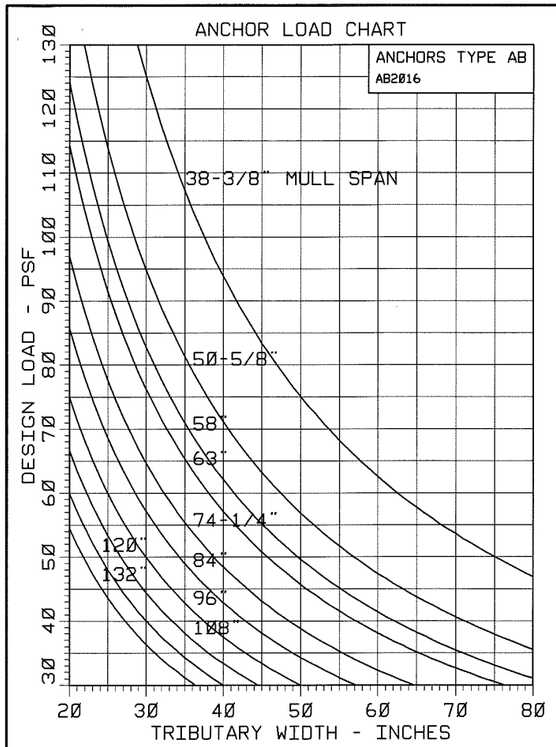

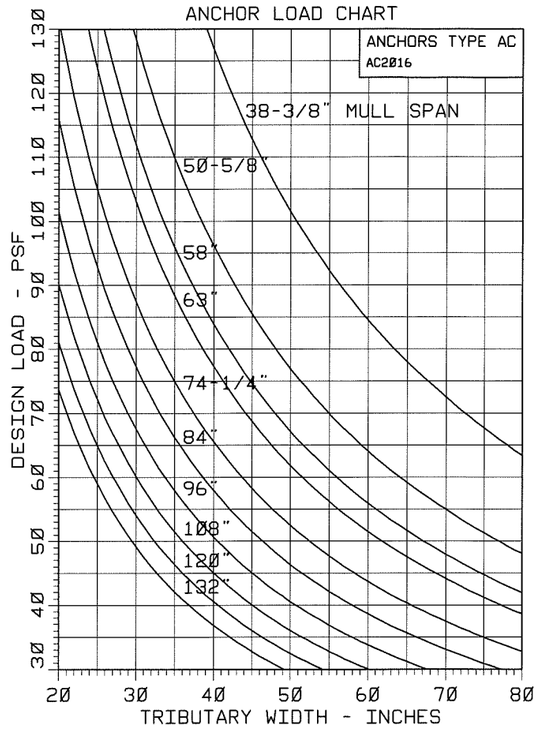

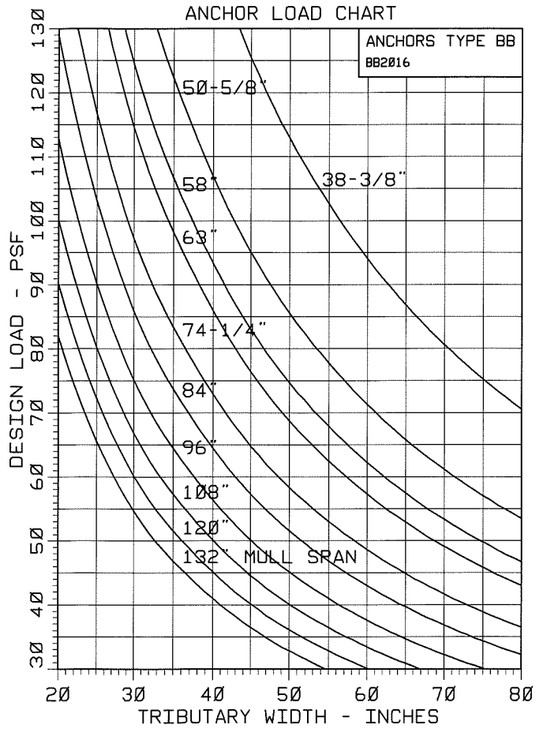

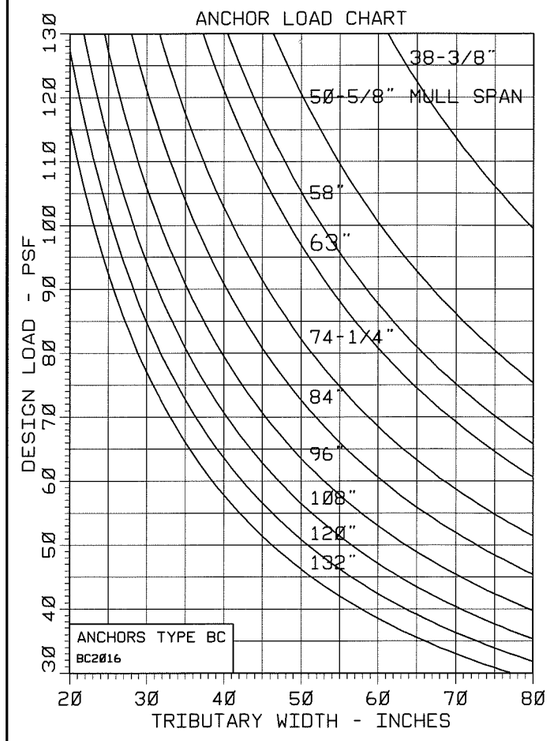

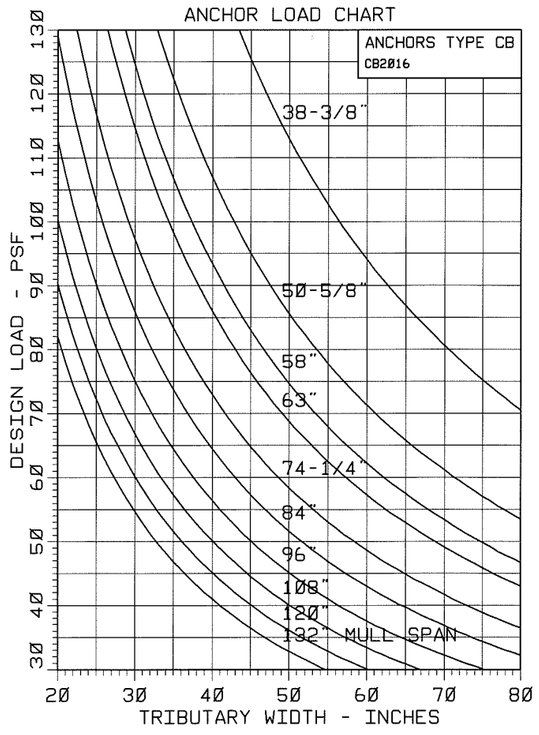

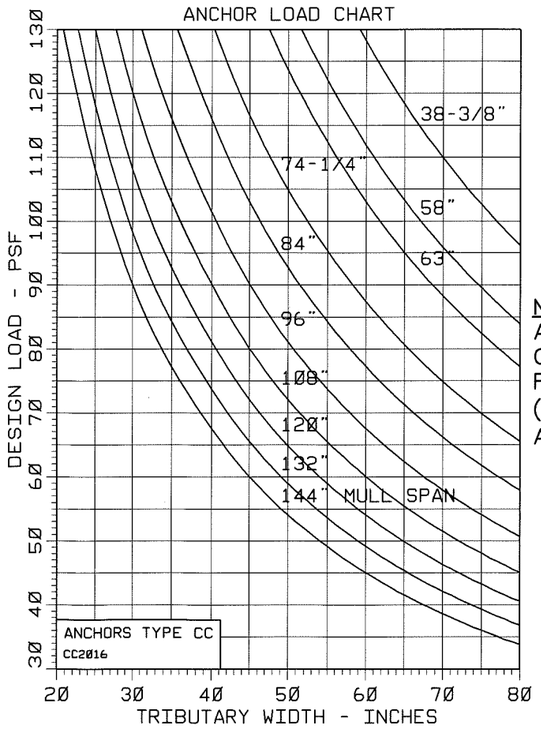

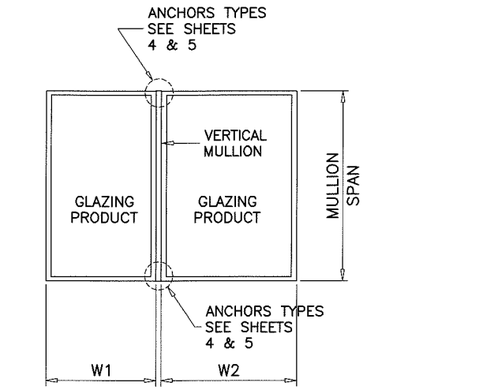

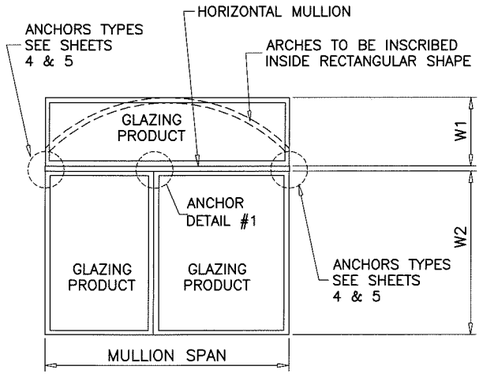

TYPICAL MULLION ARRANGEMENTS

$$\text{WIDTH (W)} = \frac{W1 + W2}{2}$$

NOTE:
ANY ANCHOR CONDITION SHOWN HEREIN MAY COVER LOCATIONS AT HEAD, SILL OR JAMB ENDS. FOR ANCHORS DESCRIPTION SEE SHEETS 4 & 5. (INTERPOLATION BETWEEN WIDTHS OR SPANS ALLOWED)

PRODUCT REVISED
as complying with the Florida
Building Code
Acceptance No 18-0129.15
Expiration Date 03/28/2023
By
Miami Dade Product Control

ANCHORS

JAVAD AHMAD
LICENSE
No. 70592
STATE OF
FLORIDA
PROFESSIONAL ENGINEER
JAN 23 2019

AL-FAROOQ CORPORATION
ENGINEERS & PRODUCT DEVELOPMENT
9360 SUNSET DRIVE, SUITE 220 (C.A.N. 3538)
MIAMI, FLORIDA 33173
TEL. (305) 264-8100 FAX. (305) 262-6978

MULLION\M95-19A-CC

ALUMINUM TUBE MULLIONS

CURV-A-TECH CORPORATION
930 W. 23rd STREET
HIALEAH, FL 33010
TEL. (305) 888-9631 FAX. (305) 888-9969

revisions:			
no	date	by	description
C	07.24.08		UPDATED FOR 2007 FBC
D	04.12.12		UPDATED TO 2010 FBC
E	05.18.15		UPDATED TO 2014 FBC
F	01.29.16		REV. PER RER COMMENTS
G	01.11.18		UPDATED TO 2017 FBC

date: 12-07-95
scale: 1/2" = 1"
dr. by: TARIQ
chk. by:

drawing no.
M95-19A

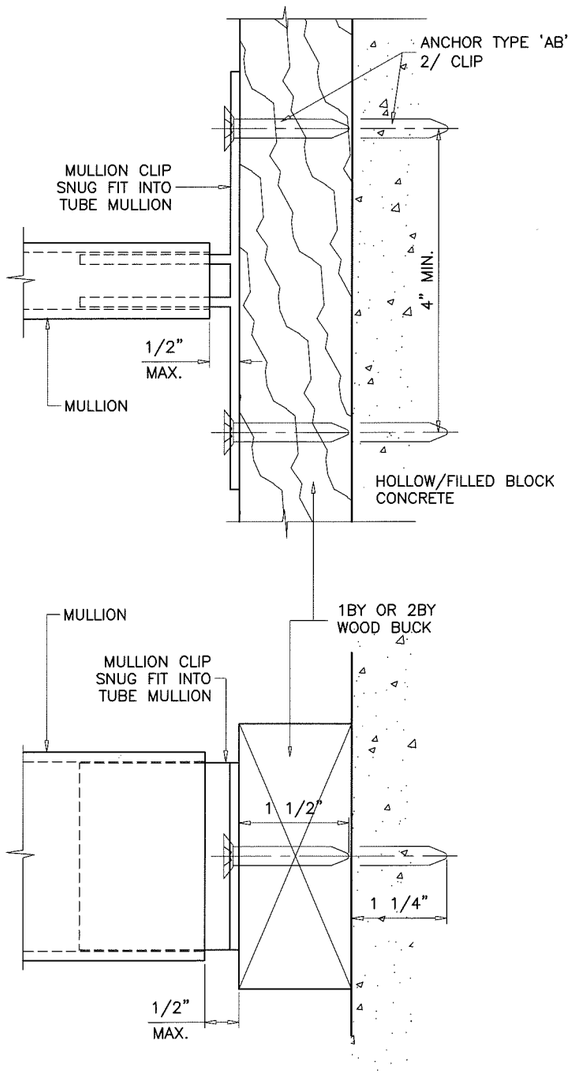

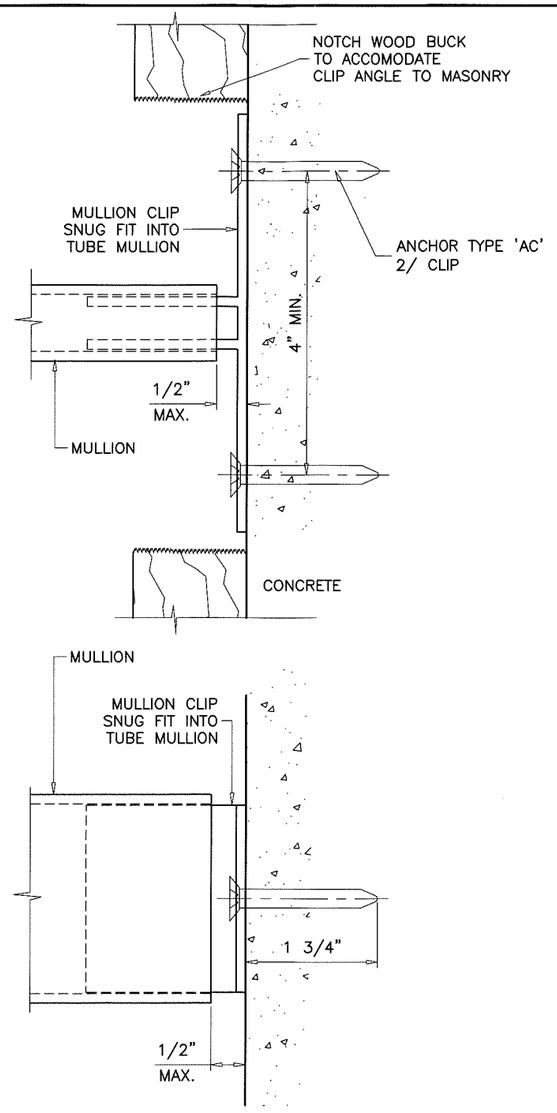

FLOATING MULLION CLIPS

CLIPS TO FIT SNUG INTO TUBE MULLIONS
LENGTH = INSIDE DIMENSION OF TUBE – 1/32"

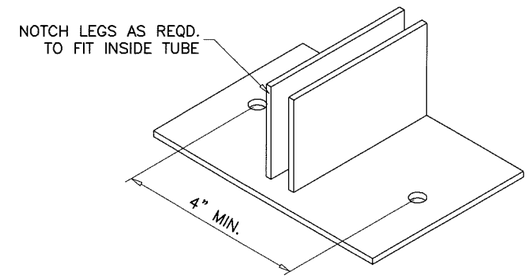

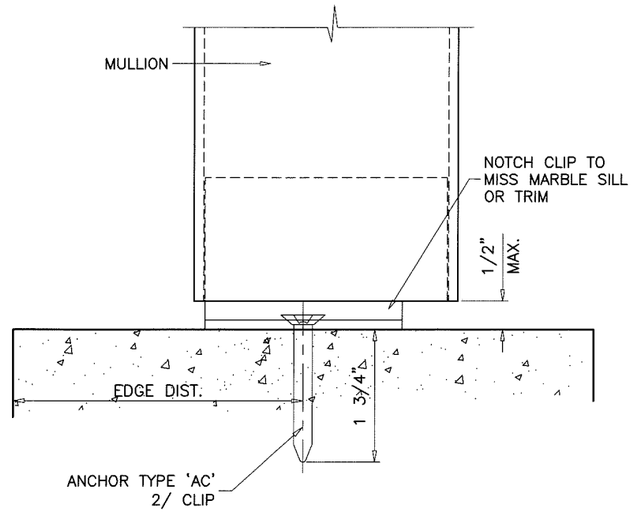

ANCHORS:

TYPE 'AB'– 1/4" DIA ULTRACON BY 'ELCO' (Fu=177 KSI, Fy=155 KSI)
INTO 2BY WOOD BUCKS OR WOOD STRUCTURES
WITH 1–1/2" MIN. PENETRATION INTO WOOD (HEAD/SILL/JAMBS)

THRU 1BY WOOD BUCKS INTO HOLLOW/FILLED BLOCKS
WITH 1–1/4" MIN. EMBED INTO BLOCKS (JAMBS)

THRU 1BY WOOD BUCKS INTO CONCRETE
WITH 1–1/4" MIN. EMBED INTO CONCRETE (HEAD/SILL/JAMBS)

ANCHOR EDGE DISTANCES

INTO CONCRETE AND MASONRY = 2–1/2" MIN.
INTO WOOD STRUCTURE = 1" MIN.

ANCHORS:

TYPE 'AC'– 1/4" DIA ULTRACON BY 'ELCO' (Fu=177 KSI, Fy=155 KSI)
DIRECTLY INTO CONCRETE
WITH 1–3/4" MIN. EMBED INTO CONCRETE (HEAD/SILL/JAMBS)

ANCHOR EDGE DISTANCES

INTO CONCRETE = 2–1/2" MIN.

WOOD BUCKS NOT BY CURVATECH
MUST SUSTAIN LOADS IMPOSED.

WOOD AT HEAD, SILL OR JAMBS SG = 0.55 MIN.
CONCRETE AT HEAD, SILL OR JAMBS f'c = 3000 PSI MIN.
C–90 HOLLOW/FILLED BLOCK AT JAMBS f'm = 2000 PSI MIN.

PRODUCT REVISED
as complying with the Florida
Building Code
Acceptance No 18-0129.15
Expiration Date 03/28/2023
By
Miami Dade Product Control

JAVAD AHMAD
LICENSE
No. 70592
JAN 23 2018
STATE OF
FLORIDA
PROFESSIONAL ENGINEER

AL-FAROOQ CORPORATION
ENGINEERS & PRODUCT DEVELOPMENT
9360 SUNSET DRIVE, SUITE 220
MIAMI, FLORIDA 33173 (C.A.N. 3538)
TEL. (305) 264-8100 FAX. (305) 262-6978

MULLION\M95–19A–CC

ALUMINUM TUBE MULLIONS

CURV–A–TECH CORPORATION
930 W. 23rd STREET
HIALEAH, FL 33010
TEL. (305) 888–9631 FAX. (305) 888–9969

revisions:

no	date	by	description
C	07.24.08		UPDATED FOR 2007 FBC
D	04.12.12		UPDATED TO 2010 FBC
E	05.18.15		UPDATED TO 2014 FBC
F	01.29.16	RER	REV. PER RER COMMENTS
G	01.11.18		UPDATED TO 2017 FBC

date: 12–07–95
scale: 1/2" = 1"
dr. by: TARIQ
chk. by:

drawing no.
M95–19A

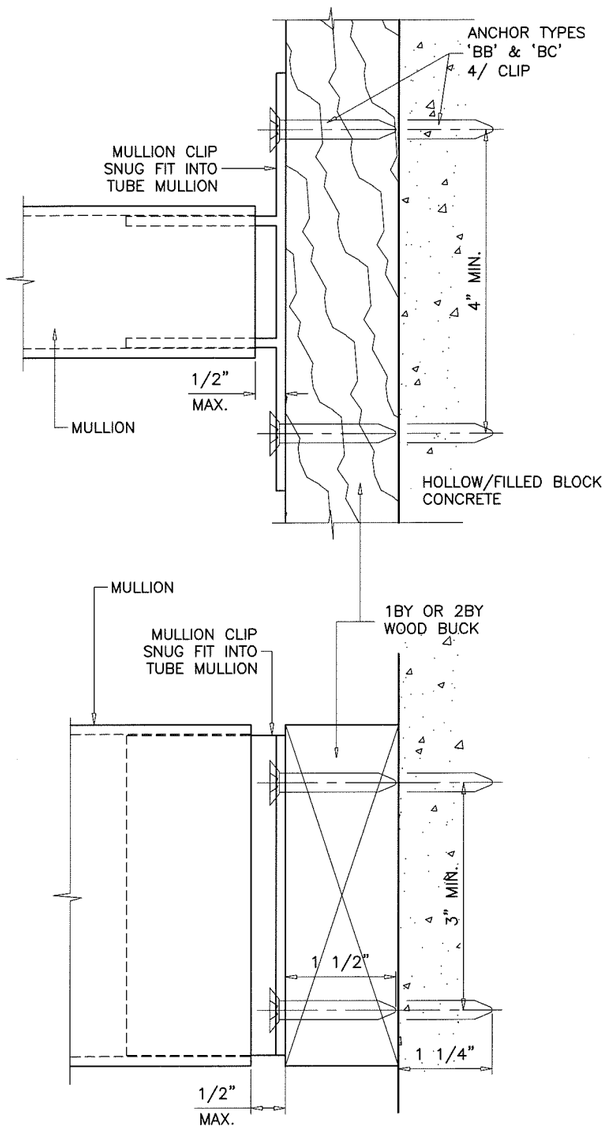

ANCHORS:

TYPE 'BB'– 1/4" DIA ULTRACON BY 'ELCO' (Fu=177 KSI, Fy=155 KSI)
INTO 2BY WOOD BUCKS OR WOOD STRUCTURES
WITH 1–1/2" MIN. PENETRATION INTO WOOD (HEAD/SILL/JAMBS)

THRU 1BY WOOD BUCKS INTO HOLLOW/FILLED BLOCKS
WITH 1–1/4" MIN. EMBED INTO BLOCKS (JAMBS)

TYPE 'BC'– 1/4" DIA ULTRACON BY 'ELCO' (Fu=177 KSI, Fy=155 KSI)
THRU 1BY WOOD BUCKS INTO CONCRETE
WITH 1–1/2" MIN. EMBED INTO CONCRETE (HEAD/SILL/JAMBS)

ANCHOR EDGE DISTANCES

INTO CONCRETE AND MASONRY = 2–1/2" MIN.
INTO WOOD STRUCTURE = 1" MIN.

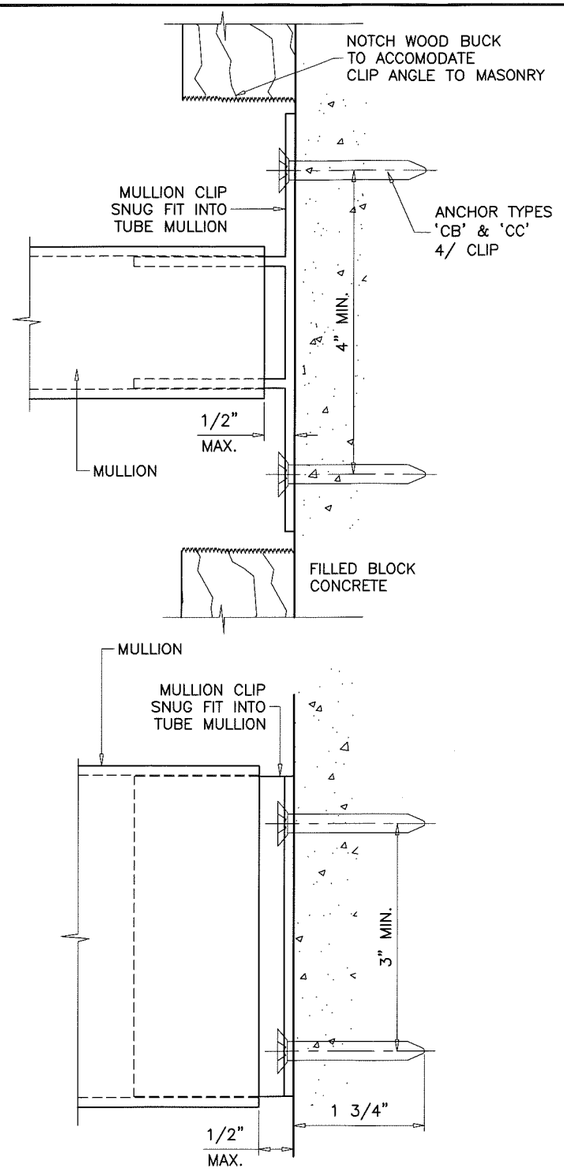

ANCHORS:

TYPE 'CB'– 1/4" DIA ULTRACON BY 'ELCO' (Fu=177 KSI, Fy=155 KSI)
DIRECTLY INTO GROUT FILLED BLOCKS
WITH 1–3/4" MIN. EMBED INTO BLOCKS (JAMBS)

TYPE 'CC'– 1/4" DIA ULTRACON BY 'ELCO' (Fu=177 KSI, Fy=155 KSI)
DIRECTLY INTO CONCRETE
WITH 1–3/4" MIN. EMBED INTO CONCRETE (HEAD/SILL/JAMBS)

ANCHOR EDGE DISTANCES

INTO CONCRETE AND MASONRY = 2–1/2" MIN.
INTO WOOD STRUCTURE = 1" MIN.

WOOD AT HEAD, SILL OR JAMBS SG = 0.55 MIN.
CONCRETE AT HEAD, SILL OR JAMBS f'c = 3000 PSI MIN.
C–90 HOLLOW/FILLED BLOCK AT JAMBS f'm = 2000 PSI MIN.

FLOATING MULLION CLIPS

CLIPS TO FIT SNUG INTO TUBE MULLIONS
LENGTH = INSIDE DIMENSION OF TUBE – 1/32"

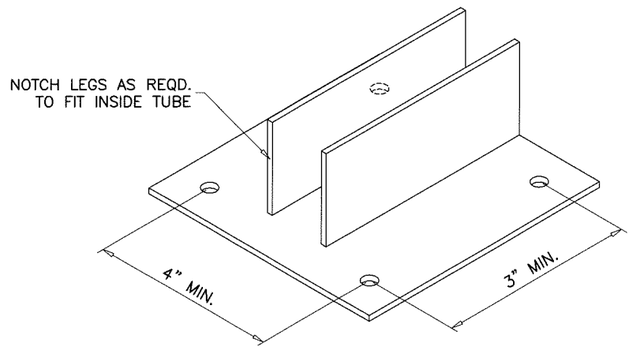

WOOD BUCKS NOT BY CURVATECH
MUST SUSTAIN LOADS IMPOSED.

PRODUCT REVISED
as complying with the Florida
Building Code
Acceptance No 18-0129.15
Expiration Date 03/28/2023
By
Miami Dade Product Control

JAVAD AHMAD
LICENSE
No. 70592
JAN 23 2018
STATE OF
FLORIDA
PROFESSIONAL ENGINEER

AL-FAROOQ CORPORATION
ENGINEERS & PRODUCT DEVELOPMENT
9360 SUNSET DRIVE, SUITE 220 (C.A.N. 3538)
MIAMI, FLORIDA 33173
TEL. (305) 264-8100 FAX. (305) 262-6978

MULLION\M95–19A–CC

ALUMINUM TUBE MULLIONS

CURV–A–TECH CORPORATION
930 W. 23rd STREET
HIALEAH, FL 33010
TEL. (305) 888–9631 FAX. (305) 888–9969

revisions:			
no	date	by	description
E	05.18.15		UPDATED TO 2014 FBC
F	01.29.16		REV. PER RER COMMENTS
G	01.11.18		UPDATED TO 2017 FBC

date: 12–07–95
scale: 1/2" = 1"
dr. by: TARIQ
chk. by:

drawing no.
M95–19A

sheet 5 of 6

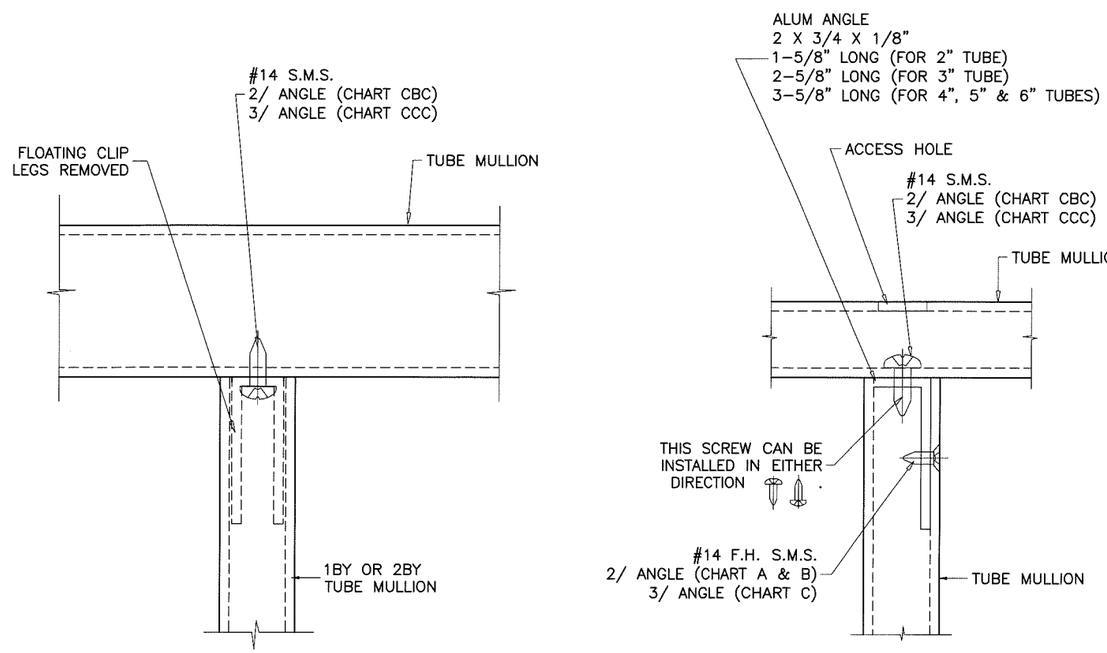

ANCHORS DETAIL #1

METAL TO METAL CONNECTION

PRODUCT REVISED
as complying with the Florida
Building Code
Acceptance No 18-0129.15
Expiration Date 03/28/2023
By
Miami Dade Product Control

JAVAD AHMAD
LICENSE
No. 70592
JAN 23 2018
STATE OF
FLORIDA
PROFESSIONAL ENGINEER

AL-FAROOQ CORPORATION
ENGINEERS & PRODUCT DEVELOPMENT
9360 SUNSET DRIVE, SUITE 220
MIAMI, FLORIDA 33173 *(C.A.N. 3538)*
TEL. (305) 264-8100 FAX. (305) 262-6978

MULLION\M95-19A-CC

ALUMINUM TUBE MULLIONS

CURV-A-TECH CORPORATION
930 W. 23rd STREET
HIALEAH, FL 33010
TEL. (305) 888-9631 FAX. (305) 888-9969

revisions:		
no	date	by description
C	07.24.08	UPDATED FOR 2007 FBC
D	04.12.12	NO CHANGE THIS SHEET
E	05.18.15	UPDATED TO 2014 FBC
F	01.29.16	NO CHANGE THIS SHEET
G	01.11.18	UPDATED TO 2017 FBC

date: 12-07-95
scale: 1/2" = 1"
dr. by: TARIQ
chk. by:

drawing no.
M95-19A

sheet 6 of 6