MIAMI-DADE COUNTY
PRODUCT CONTROL SECTION
11805 SW 26 Street, Room 208
Miami, Florida 33175-2474
T (786) 315-2590 F (786) 315-2599
www.miamidade.gov/economy

DEPARTMENT OF REGULATORY AND ECONOMIC RESOURCES (RER)
BOARD AND CODE ADMINISTRATION DIVISION

NOTICE OF ACCEPTANCE (NOA)

Vision Hollow Metal Limited
400 Zenway Blvd., Unit 1
Woodbridge, Ontario L4H 057

SCOPE:

This NOA is being issued under the applicable rules and regulations governing the use of construction materials. The documentation submitted has been reviewed and accepted by Miami-Dade County RER -Product Control Section to be used in Miami Dade County and other areas where allowed by the Authority Having Jurisdiction (AHJ).

This NOA shall not be valid after the expiration date stated below. The Miami-Dade County Product Control Section (In Miami Dade County) and/or the AHJ (in areas other than Miami Dade County) reserve the right to have this product or material tested for quality assurance purposes. If this product or material fails to perform in the accepted manner, the manufacturer will incur the expense of such testing and the AHJ may immediately revoke, modify, or suspend the use of such product or material within their jurisdiction. RER reserves the right to revoke this acceptance, if it is determined by Miami-Dade County Product Control Section that this product or material fails to meet the requirements of the applicable building code.

This product is approved as described herein, and has been designed to comply with the Florida Building Code, including the High Velocity Hurricane Zone.

DESCRIPTION: Series LS18 Outswing Single and Double louvered Steel Doors-LMI

APPROVAL DOCUMENT: Drawing No "**S-4114**" Rev **2**, titled "Series LS18 Steel Single & Double Louvered-Outswing -Impact", sheets 1 through 15 of 15, prepared by R. W. Building consultant, Inc., dated 10/29/15 and last revised on 01-17-18, signed and sealed by Lyndon F. Schmidt, P.E., bearing the Miami-Dade County Product Control Revision stamp with the Notice of Acceptance number and expiration date by the Miami-Dade County Product Control Section.

MISSILE IMPACT RATING: Large and Small Missile Impact Resistant

Limitations:

1. **Not** approved where **Air** and **Water** infiltration are required.
2. **8'0"** doors must have min 10" stiles and 18" top rail and 10" min bottom rails and **7'0"** must have min 6" stiles and top rails with min 10" bottom rails.(See sheets 1 & 2).
3. Double doors with Rim Panic device requires PDQ 9200M removable mullion for installation.
4. Electrical/Electronic function is not part of this approval, such functions to be reviewed and approved by AHJ

LABELING: Each unit shall bear a permanent label with the manufacturer's name or logo, **Woodbridge, Ontario, Canada,** series/model and following statement: "Miami-Dade County Product Control Approved", unless otherwise noted herein.

RENEWAL of this NOA shall be considered after a renewal application has been filed and there has been no change in the applicable building code negatively affecting the performance of this product.

TERMINATION of this NOA will occur after the expiration date or if there has been a revision or change in the materials, use, and/or manufacture of the product or process. Misuse of this NOA as an endorsement of any product, for sales, advertising or any other purposes shall automatically terminate this NOA. Failure to comply with any section of this NOA shall be cause for termination and removal of NOA.

ADVERTISEMENT: The NOA number preceded by the words Miami-Dade County, Florida, and followed by the expiration date may be displayed in advertising literature. If any portion of the NOA is displayed, then it shall be done in its entirety.

INSPECTION: A copy of this entire NOA shall be provided to the user by the manufacturer or its distributors and shall be available for inspection at the job site at the request of the Building Official.

This NOA **revises # 15-0611.02** and consists of this page 1 and evidence pages E-1 & E-2, as well as approval document mentioned above.

The submitted documentation was reviewed by **Ishaq I. Chanda, P.E.**

MIAMI-DADE COUNTY APPROVED

3/5/18

Vision Hollow Metal Limited

NOTICE OF ACCEPTANCE: EVIDENCE SUBMITTED

1. Evidence submitted under previous approvals

A. DRAWINGS

1. Manufacturer's die drawings and sections.
2. Drawing No "**S-4114**" Rev **1**, titled "Series LS18 Steel Single & Double Louvered-Outswing - Impact", sheets 1 through 13 of 13, prepared by R. W. Building consultant, Inc., dated 06-01-16, signed and sealed by Lyndon F. Schmidt, P.E.

B. TESTS

1. Test reports on: 1) Air Infiltration Test, per FBC, TAS 202-94
   2) Uniform Static Air Pressure Test, Loading per FBC TAS 202-94
   3) Water Resistance Test, per FBC, TAS 202-94 (w/Exterior astragal)
   4) Large Missile Impact Test per FBC, TAS 201-94
   5) Cyclic Wind Pressure Loading per FBC, TAS 203-94
   6) Forced Entry Test, per FBC 2411 3.2.1, TAS 202-94

Along with manufacturer's parts and section drawings of double outswing Louvered steel doors (Samples A-1 & D-1, marked by Fenestration Testing Lab, Test Report No. **FTL-8513,** dated 10/22/15, signed and sealed by Idalmis Ortega, P. E.

This test report was revised by an addendum letter w/ revised marked-up Dwgs, issued by Fenestration testing lab, dated Mar 25, 2016, signed by Ms. L. Delgado.

C. CALCULATIONS

1. Anchor verification calculations and structural analysis, complying with FBC2014 (5th Edition), prepared by R. W. Building Consultant, Inc., dated 11-16-15 and last revised on 05/31/16, signed and sealed by L. F. Schmidt, P. E.

D. QUALITY ASSURANCE

1. Miami Dade Department of Department of Regulatory and Economic Resources (RER).

E. MATERIAL CERTIFICATIONS

1. Tensile test report # FTL-8718, dated 11/04/15per ASTM A-370, prepared by fenestration Testing lab, signed & sealed by Idalmis Ortega, P.E.
2. Notice of Acceptance No. **11-0926.07** issued to Dyplastic Products, LLC (former Apache Products Co) for "EPS-Expanded Polystyrene Insulation", expiring on 01/11/2017.

F. STATEMENTS

1. Letter of conformance to FBC 2014 (5th edition) and No Financial interest dated 05/31/16, prepared by R. W. Building Consultant, Inc., signed and sealed by L. F. Schmidt, P.E.
2. Lab compliance as part of the above referenced test report.

G. OTHER

1. Test proposal dated 12/03/14 approved by RER.
2. Distributor Agreement between Vision Hollow Metal Ltd., Ontario Canada and Precision Building Products, Florida USA, dated 04/13/15, signed by Nick Siragusa and Jacques Rousseau, respectively, on behalf of their companies.

Ishaq I. Chanda

Ishaq I. Chanda, P.E.
Product Control Examiner
NOA No. 18-0131.07
Expiration Date: June 16, 2021
Approval Date: March 15, 2018

NOTICE OF ACCEPTANCE: EVIDENCE SUBMITTED

2. New Evidence submitted.

A. DRAWINGS

1. Drawing No "**S-4114**" Rev **2**, titled "Series LS18 Steel Single & Double Louvered-Outswing - Impact", sheets 1 through 15 of 15, prepared by R. W. Building consultant, Inc., dated 10/29/15 and last revised on 01-17-18, signed and sealed by Lyndon F. Schmidt, P.E.

Note: This revision 2, consist of FBC code update note only.

B. TESTS

1. None.

C. CALCULATIONS

1. None.

D. QUALITY ASSURANCE

1. Miami Dade Department of Regulatory and Economic Resources (RER).

E. MATERIAL CERTIFICATIONS

1. Notice of Acceptance No. **17-0808.02** issued to Kuraray America, Inc. (former E.I. DuPont DeNemours & Co., Inc.) for the "Kuarary **Sentry Glass ® Interlayer**", expiring on 07/4/23.
2 Notice of Acceptance No. **16-1129.05** issued to Dyplast Products, LLC, (Former Apache Product Co.) for "E and R Board Expanded Polystyrene Rigid foam Insulation", expiring on 01/11/22.

F. STATEMENTS

1. Statement letter of conformance to FBC 2017(6th edition) dated JAN 17, 2018, issued by R. W. Building consultant, Inc., signed and sealed by Lyndon F. Schmidt, P.E.

G. OTHER

1. This NOA **revises NOA # 15-0611.02**, expiring 06/16/2021.

Ishaq I. Chanda

Ishaq I. Chanda, P.E.
Product Control Examiner
NOA No. 18-0131.07
Expiration Date: June 16, 2021
Approval Date: March 15, 2018

Vision Hollow Metal Limited

400 Zenway Blvd. Unit #1
Woodbridge, ON L4H OS7

LS18 STEEL SINGLE & DOUBLE DOORS LOUVERED

OUTSWING

"IMPACT"

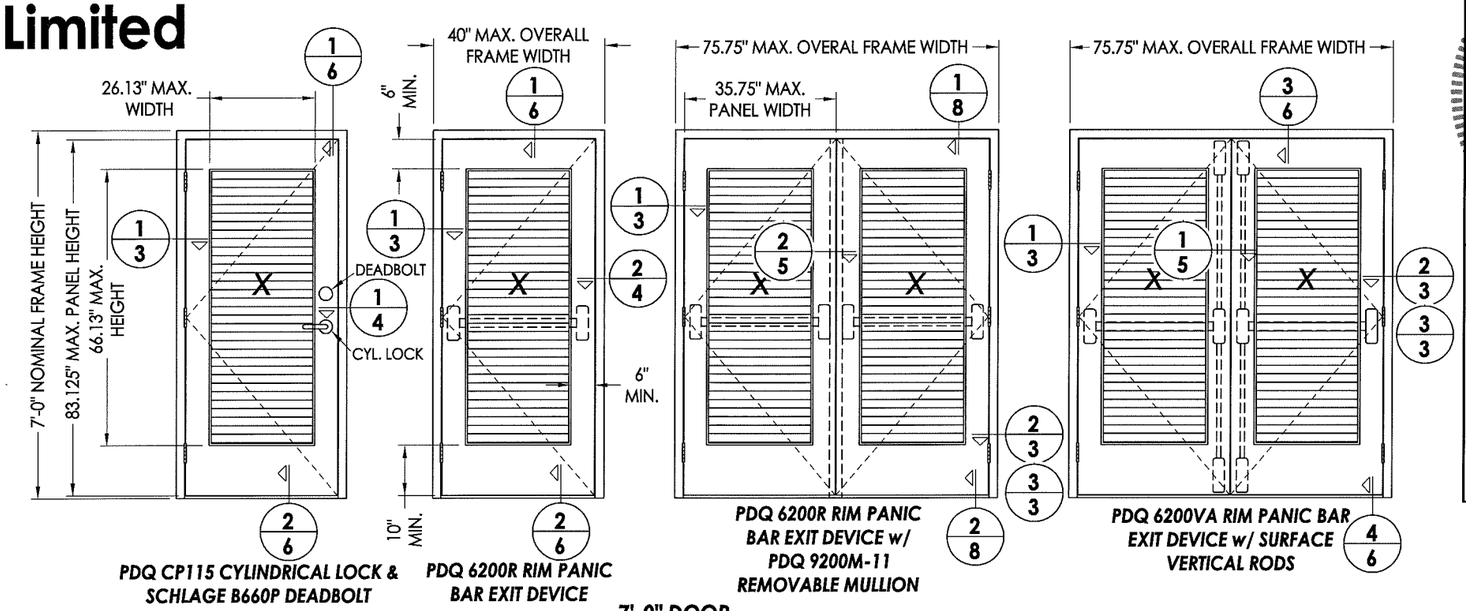

7'-0" DOOR

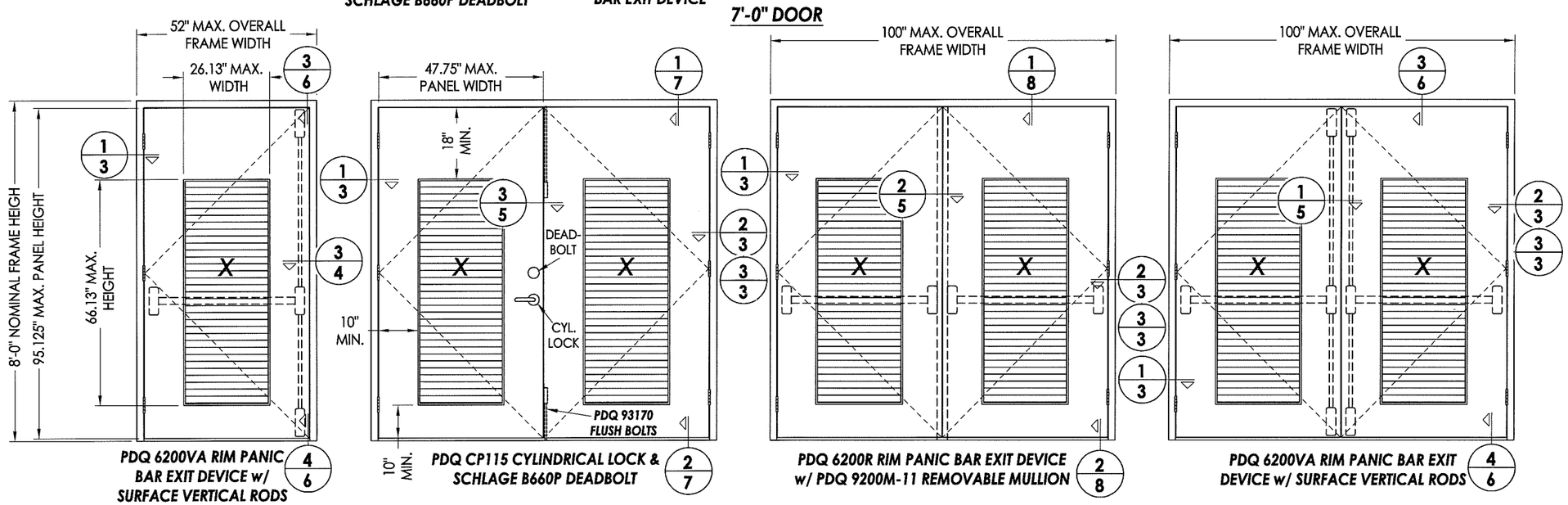

8'-0" DOOR

TABLE OF CONTENTS		TABLE OF CONTENTS	
SHEET #	DESCRIPTION	SHEET #	DESCRIPTION
1	Typical elevation & design pressures	9	Frame anchoring: X (7'-0" Door)
2	General notes & glazed door panel details	10	Frame anchoring: XX (7'-0" Door)
3	Horizontal cross sections	11	Frame anchoring: X (8'-0" Door)
4	Horizontal cross sections	12	Frame anchoring: XX (8'-0" Door)
5	Horizontal cross sections	13	Hardware details
6	Vertical cross sections	14	Components
7	Vertical cross sections	15	Bill of materials and components
8	Vertical cross sections		

		NOT APPROVED WHERE WATER RESISTANCE & AIR INFILTRATION ARE REQUIRED	
CONFIG.	MAX. FRAME DIMENSION	DESIGN PRESSURE (PSF)	
		POSITIVE	NEGATIVE
X	52.0" x 97.75"	+65.0	-65.0
XX	100.0" x 97.75"	+65.0	-65.0

PRODUCT REVISED
as complying with the Florida
Building Code
Acceptance No 18-0131.07
Expiration Date JUNE 16, 2021
Miami-Dade Product Control

STATE OF FLORIDA
LYNDON F. SCHMIDT
LICENSE No 43409
PROFESSIONAL ENGINEER

Documents Prepared By:
Lyndon F. Schmidt
P.E. No. 43409

RW BUILDING CONSULTANTS, INC.
P.O. Box 230, Valrico, FL 33595
Phone No.: 813.659.9197
FBPE C.A. No. 9813

PRODUCT: LS18 STEEL DOOR

PART OR ASSEMBLY: TYPICAL ELEVATIONS & DESIGN PRESSURES

NO.	DATE	REVISIONS	BY
2	1/17/18	UPDATE TO 6TH ED. (2017) FBC	LFS
1	5/26/16	REVISE ANCHORING	LFS

DATE: 10/29/15
SCALE: N.T.S.
DWG. BY: JK
CHK. BY: LFS
DRAWING NO.: S-4114
SHEET 1 OF 15

GENERAL NOTES

1. This product has been evaluated and is in compliance with the 6th Edition (2017) Florida Building Code (FBC) structural requirements for the "High Velocity Hurricane Zone" (HVHZ).
2. Product anchors shall be as listed and spaced as shown on details. Anchor embedment to base material shall be beyond wall dressing or stucco.
3. When used in the "HVHZ", this product complies with Section 1626 of the Florida Building Code and does not require an impact resistant covering.
4. Site conditions that deviate from the details of this drawing require a one-time product approval from Miami-Dade County.
5. This product does not meet the water infiltration requirements for the "HVHZ" and shall be installed only in non-habitable areas or at habitable locations protected by an overhang or canopy such that the angle between the edge of canopy or overhang to sill is less than 45 degrees.
6. All steel shall be protected as specified in Section 2222.6 of the FBC.

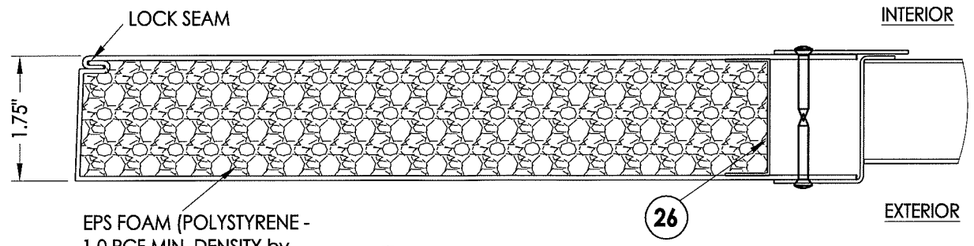

1/2 HORIZONTAL CROSS SECTION

PRODUCT REVISED
In complying with the Florida Building Code
Acceptance No. LE-0131.07
Expiration Date 6/11/12
Shay I. Chaus
Miami-Dade Product Control

STATE OF FLORIDA PROFESSIONAL ENGINEER L.F. SCHMIDT LICENSE No 43409

Documents Prepared By:
Lyndon F. Schmidt
P.E. No. 43409

BUILDING CONSULTANTS, INC.
P.O. Box 230, Valrico, FL 33595
Phone No.: 813.659.9197
FBPE C.A. No. 9813

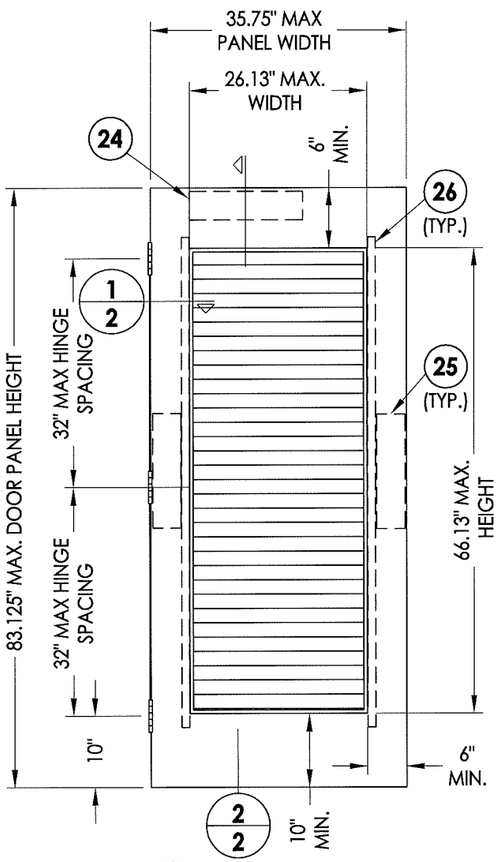

40 LOUVERED DOOR PANEL
7'-0" Door

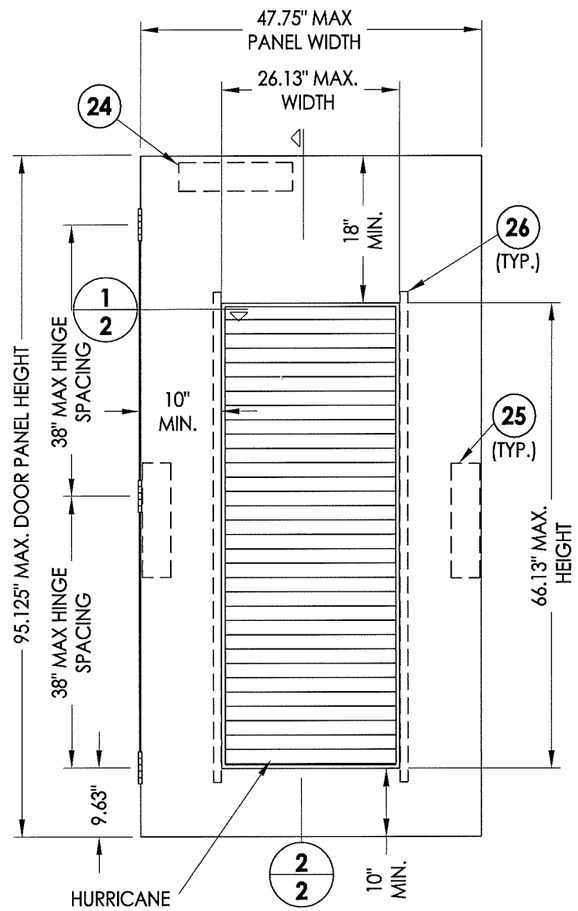

41 LOUVERED DOOR PANEL
8'-0" Door

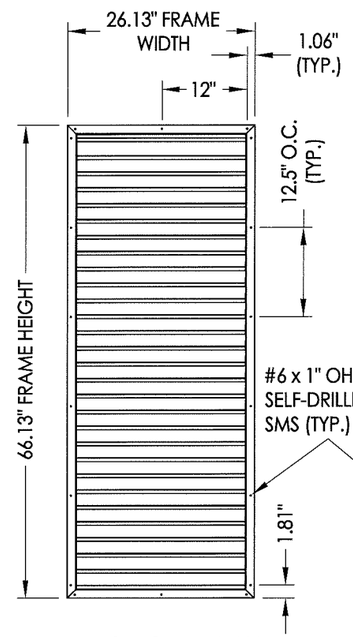

EXTERIOR LOUVER FRAME

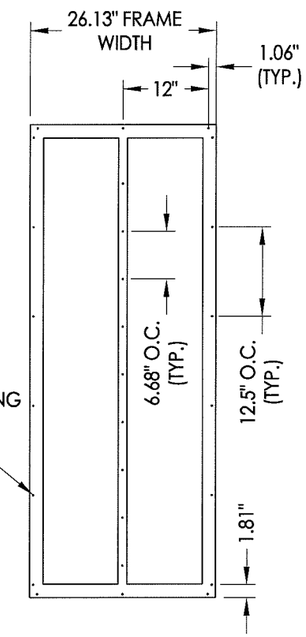

INTERIOR LOUVER FRAME

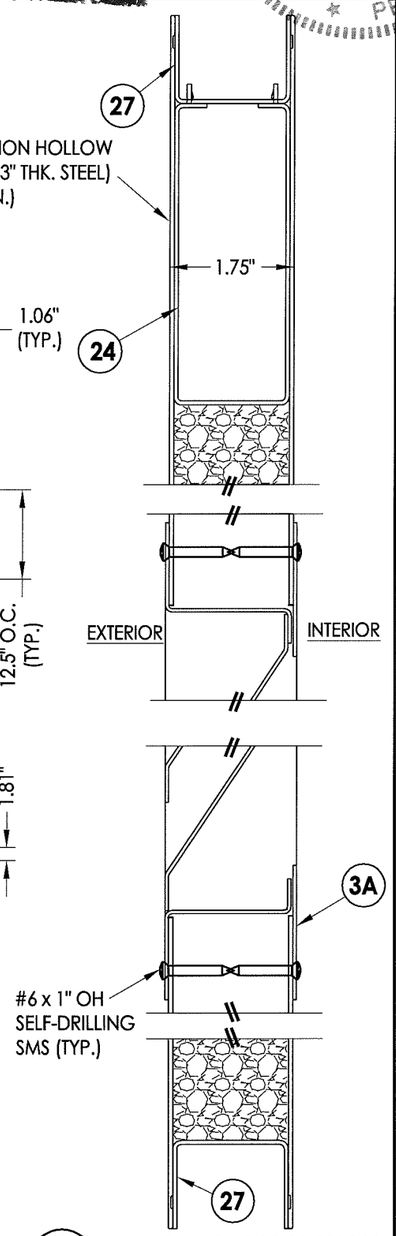

2/2 VERTICAL CROSS SECTION

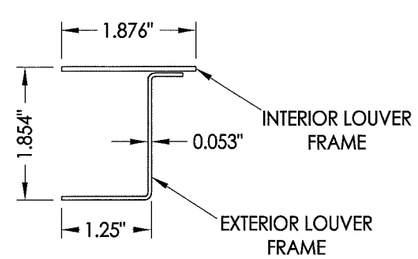

3A HURRICANE LOUVER
(VISION HOLLOW METAL)

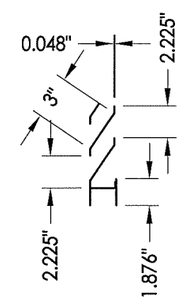

LOUVER BLADE SECTION
BLADES WELDED TO FRAME AT EACH END

NO.	DATE	REVISIONS	BY
2	1/17/18	UPDATE TO 6TH ED. (2017) FBC	LFS
1	5/26/16	REVISE ANCHORING	LFS

PRODUCT: LS18 STEEL DOOR

PART OR ASSEMBLY: LOUVERED DOOR PANEL DETAILS

DATE: 10/29/15
SCALE: N.T.S.
DWG. BY: JK
CHK. BY: LFS
DRAWING NO.: S-4114
SHEET 2 OF 15

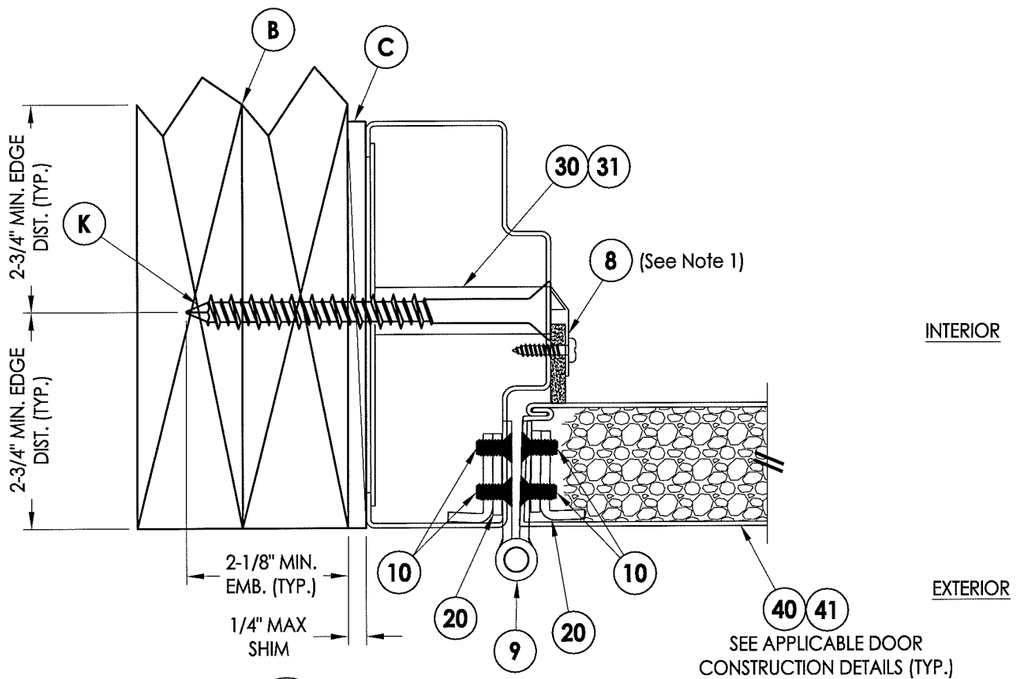

1/3 HORIZONTAL CROSS SECTION

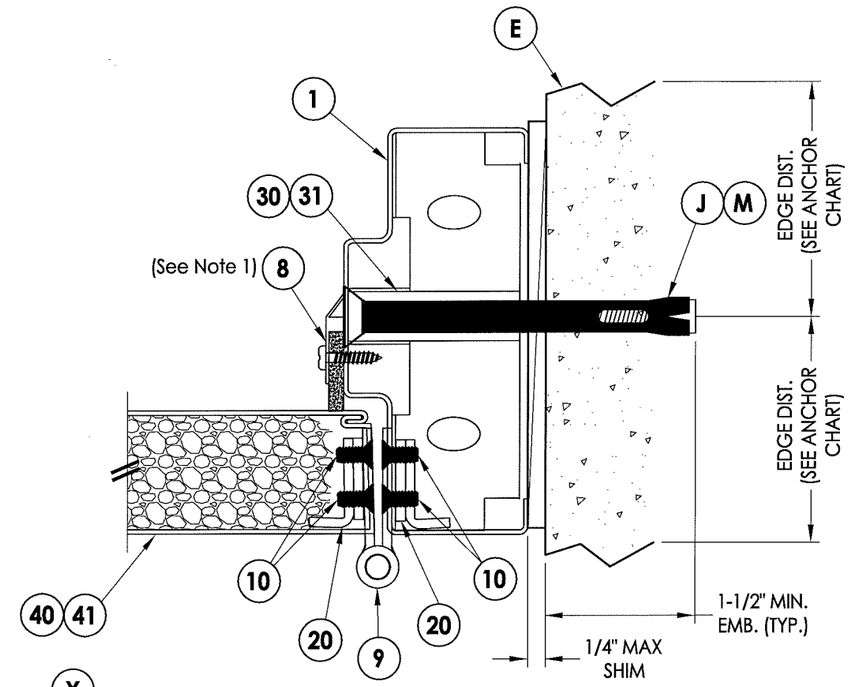

2/3 HORIZONTAL CROSS SECTION

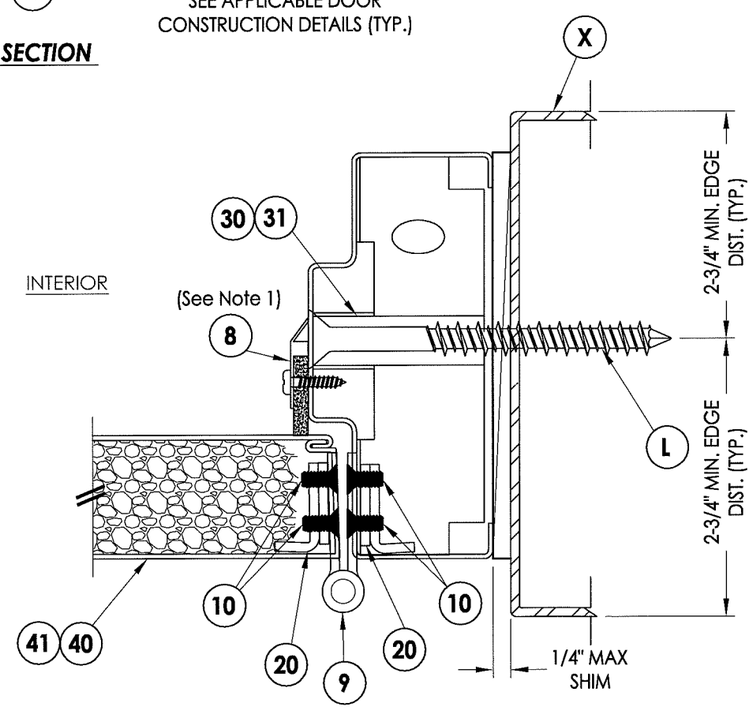

3/3 HORIZONTAL CROSS SECTION

PRODUCT REVISED
as complying with the Florida Building Code
Acceptance No. 18-0131.07
Expiration Date 6/16/21
Mr. Shaul Product Control

Note:
1. Frame weatherstrip attached w/ #6 X 5/8" PH SMS located 2" from ends & 8" max. o.c. thereafter.

NO.	DATE	REVISIONS	BY
2	1/17/18	UPDATE TO 6TH ED. (2017) FBC	LFS
1	5/26/16	REVISE ANCHORING	LFS

DATE: 10/29/15
SCALE: N.T.S.
DWG. BY: JK
CHK. BY: LFS
DRAWING NO.: S-4114
SHEET 3 OF 15

PRODUCT: LS18 STEEL DOOR
PART OR ASSEMBLY: HORIZONTAL CROSS SECTIONS

Documents Prepared By:
Lyndon F. Schmidt
P.E. No. 43409
RW BUILDING CONSULTANTS, INC.
P.O. Box 230, Valrico, FL 33595
Phone No.: 813.659.9197
FBPE C.A. No. 9813

LYNDON F. SCHMIDT LICENSE No 43409 STATE OF FLORIDA PROFESSIONAL ENGINEER

Note:
1. Frame weatherstrip attached w/ #6 X 5/8" PH SMS located 2" from ends & 8" max. o.c. thereafter.

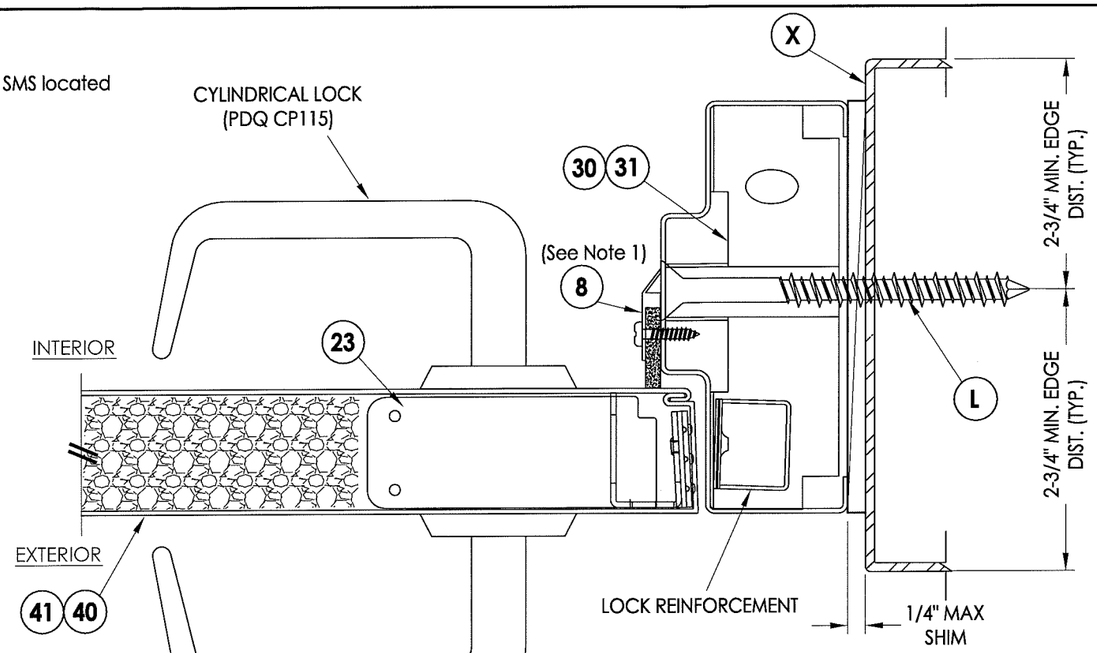

1/4 HORIZONTAL CROSS SECTION
CYLINDRICAL LOCK (PDQ)

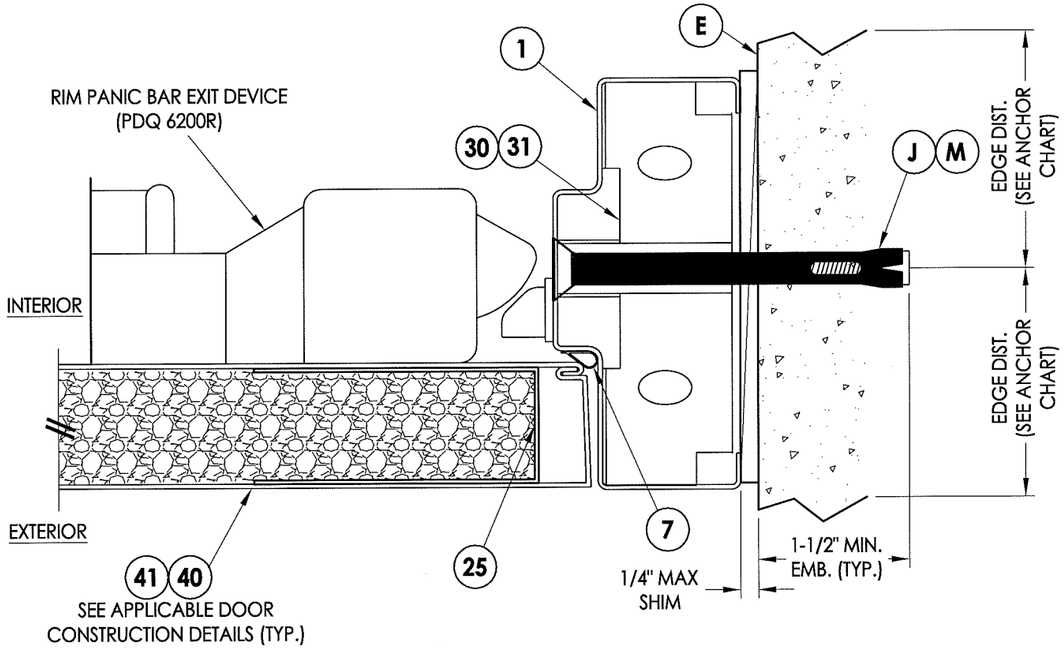

2/4 HORIZONTAL CROSS SECTION
RIM PANIC BAR EXIT DEVICE (PDQ 6200R)

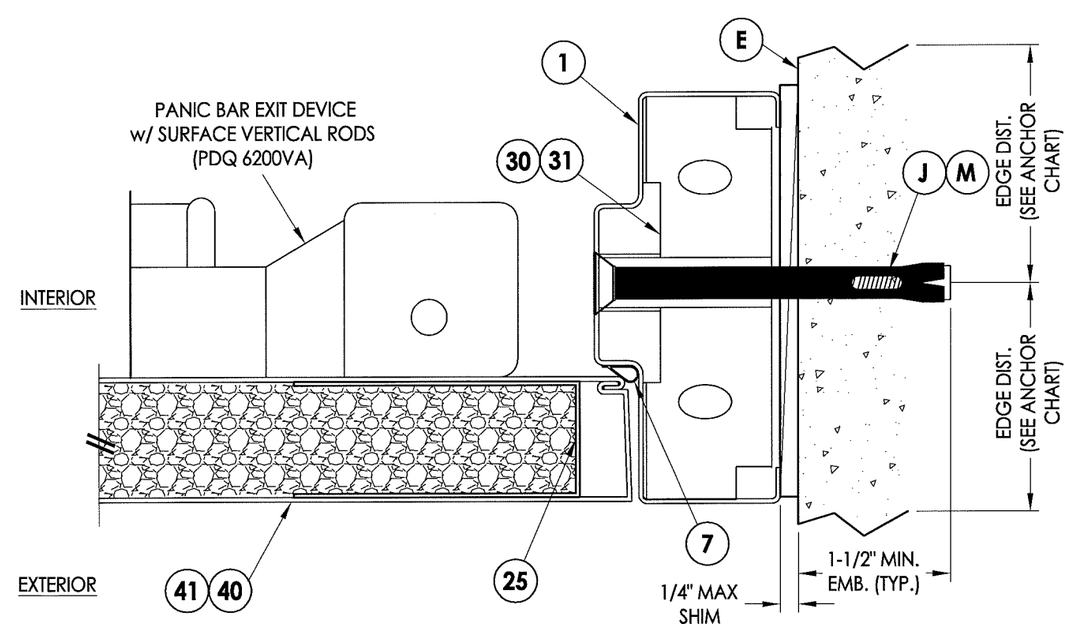

3/4 HORIZONTAL CROSS SECTION
PANIC BAR EXIT DEVICE w/ SURFACE VERTICAL RODS (PDQ 6200VA)

*PRODUCT REVISED
as complying with the Florida
Building Code
Acceptance No. 18-0131.07
Expiration Date 6/16/21
Ishang L. Chauhan
Miami-Dade Product Control

LYNDON F. SCHMIDT
LICENSE
No 43409
STATE OF
PROFESSIONAL ENGINEER
FLORIDA

Documents Prepared By:
Lyndon F. Schmidt
P.E. No. 43409

RW BUILDING CONSULTANTS, INC.
P.O. Box 230, Valrico, FL 33595
Phone No.: 813.659.9197
FBPE C.A. No. 9813

PRODUCT: LS18 STEEL DOOR

PART OR ASSEMBLY: HORIZONTAL CROSS SECTIONS

NO.	DATE	REVISIONS	BY
2	1/17/18	UPDATE TO 6TH ED. (2017) FBC	LFS
1	5/26/16	REVISE ANCHORING	LFS

DATE: 10/29/15
SCALE: N.T.S.
DWG. BY: JK
CHK. BY: LFS
DRAWING NO.: S-4114
SHEET 4 OF 15

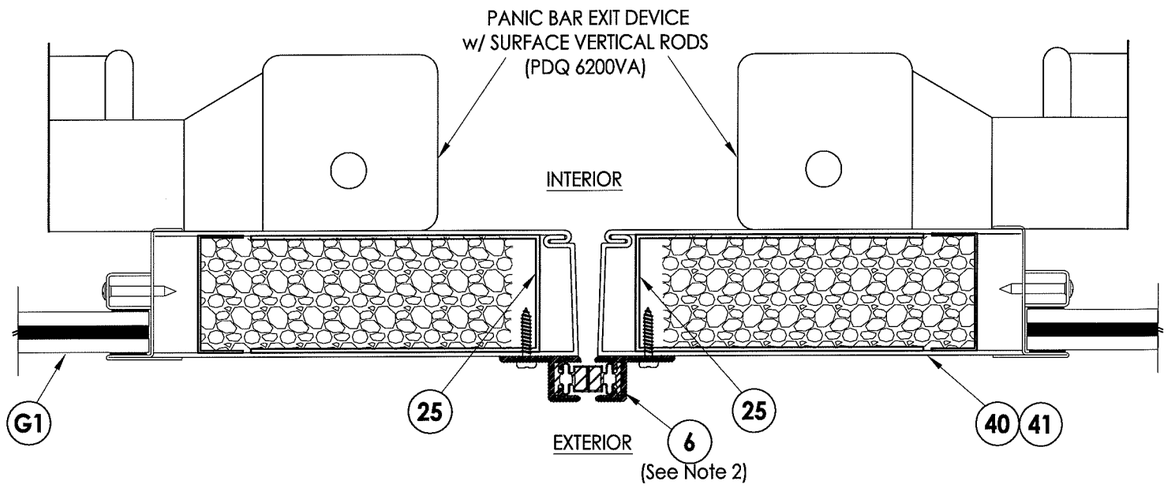

1/5 HORIZONTAL CROSS SECTION
PANIC BAR EXIT DEVICE w/ SURFACE VERTICAL RODS (PDQ 6200VA)

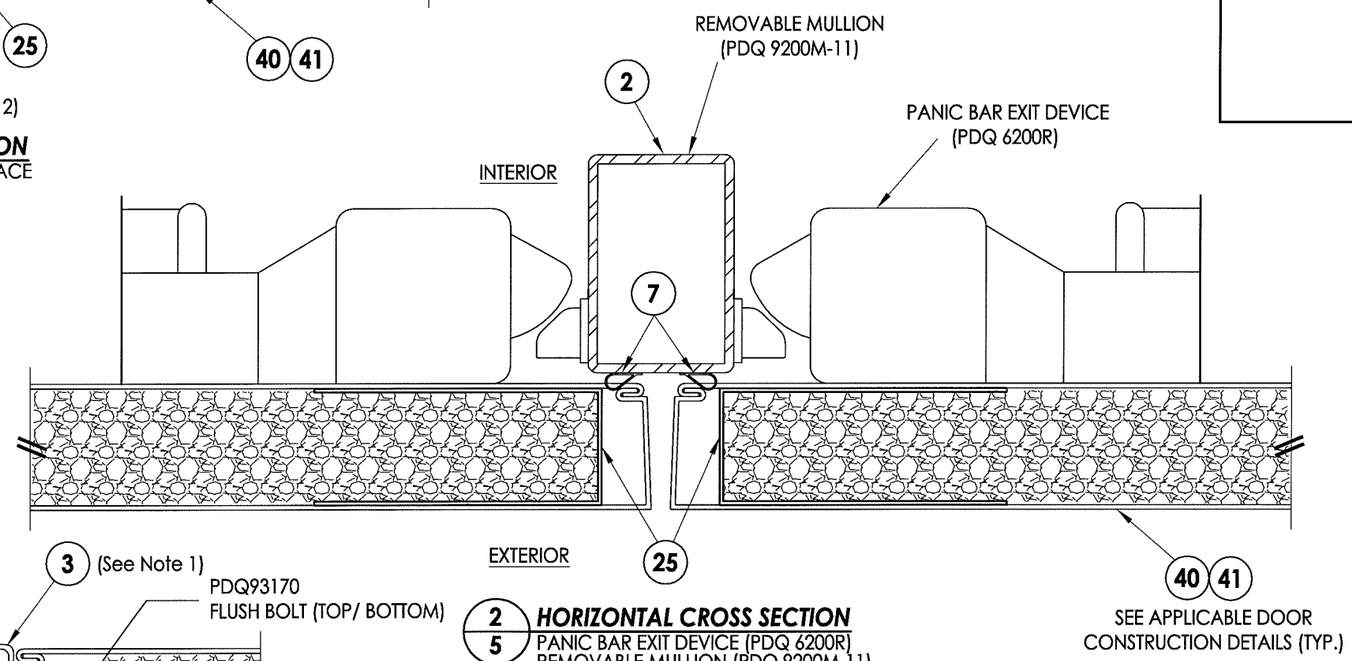

2/5 HORIZONTAL CROSS SECTION
PANIC BAR EXIT DEVICE (PDQ 6200R)
REMOVABLE MULLION (PDQ 9200M-11)

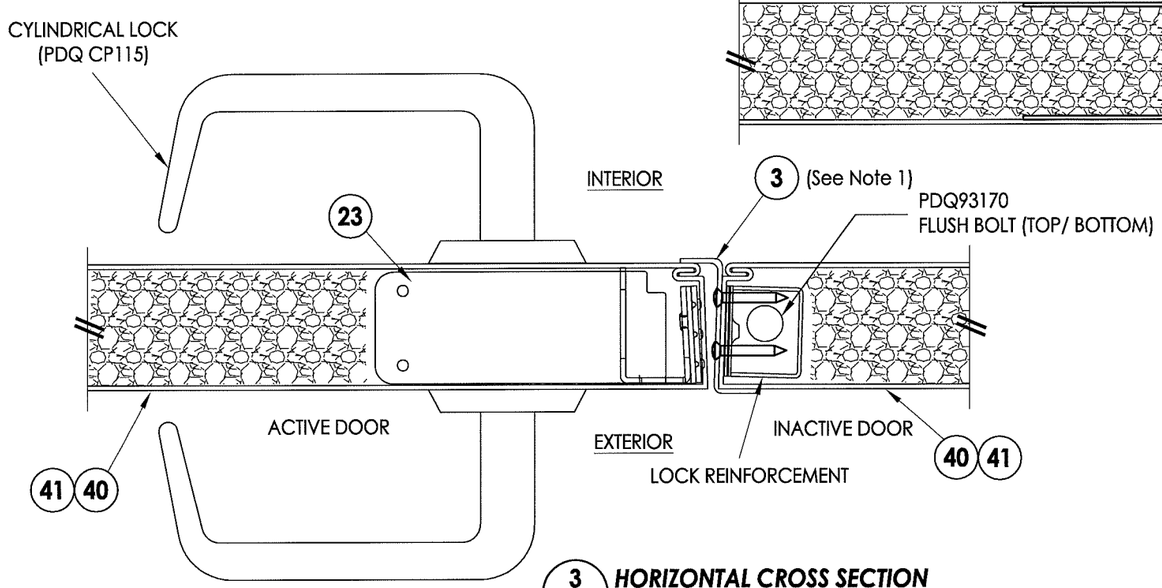

3/5 HORIZONTAL CROSS SECTION
CYLINDRICAL LOCK (PDQ G115) w/ DEADBOLT (SCHLAGE B660P)

PRODUCT REVISED
as complying with the Florida
building Code
Acceptance No 18-0131.07
Expiration Date 6/16/21
Mr. Ishaq I. Chanda
Product Control

Notes:
1. "Z" Astragal attached to the inactive door w/ 2 rows of #6 x 1" OH Self-Drilling SMS located @ 2-1/2", 21-1/2", 33-1/2", 52-5/8", 64-5/8", 79-5/8" & 92-5/8" from bottom.
2. Frame weatherstrip attached w/ #6 X 5/8" PH SMS located 2" from ends & 8" max. o.c. thereafter.

STATE OF FLORIDA
LYNDON F. SCHMIDT
LICENSE
No 43409
PROFESSIONAL ENGINEER

Documents Prepared By:
Lyndon F. Schmidt
P.E. No. 43409
R.W. BUILDING CONSULTANTS, INC.
P.O. Box 230, Valrico, FL 33595
Phone No.: 813.659.9197
FBPE C.A. No. 9813

PRODUCT: LS18 STEEL DOOR

PART OR ASSEMBLY: HORIZONTAL CROSS SECTIONS

NO.	DATE	REVISIONS	BY
2	1/17/18	UPDATE TO 6TH ED. (2017) FBC	LFS
1	5/26/16	REVISE ANCHORING	LFS

DATE: 10/29/15
SCALE: N.T.S.
DWG. BY: JK
CHK. BY: LFS
DRAWING NO.: S-4114
SHEET 5 OF 15

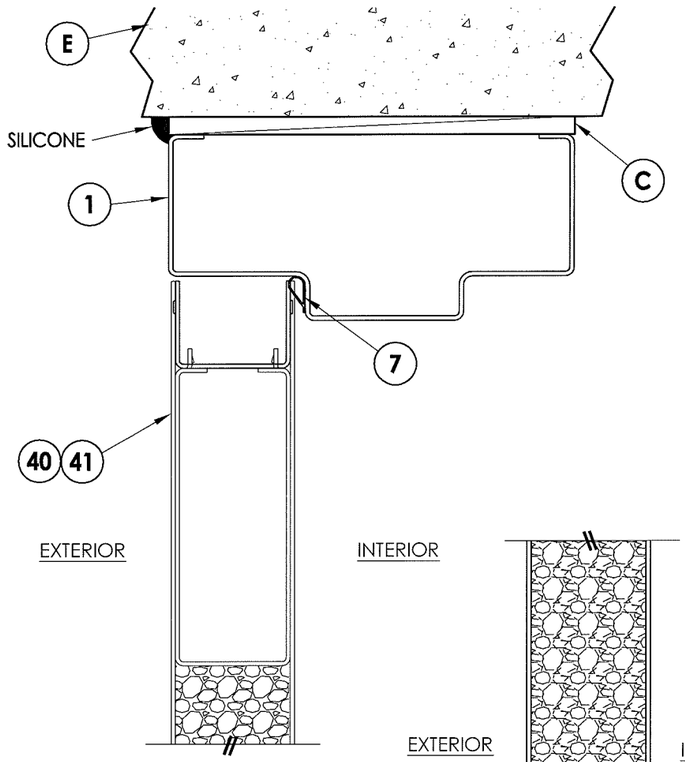

1/6 VERTICAL CROSS SECTION

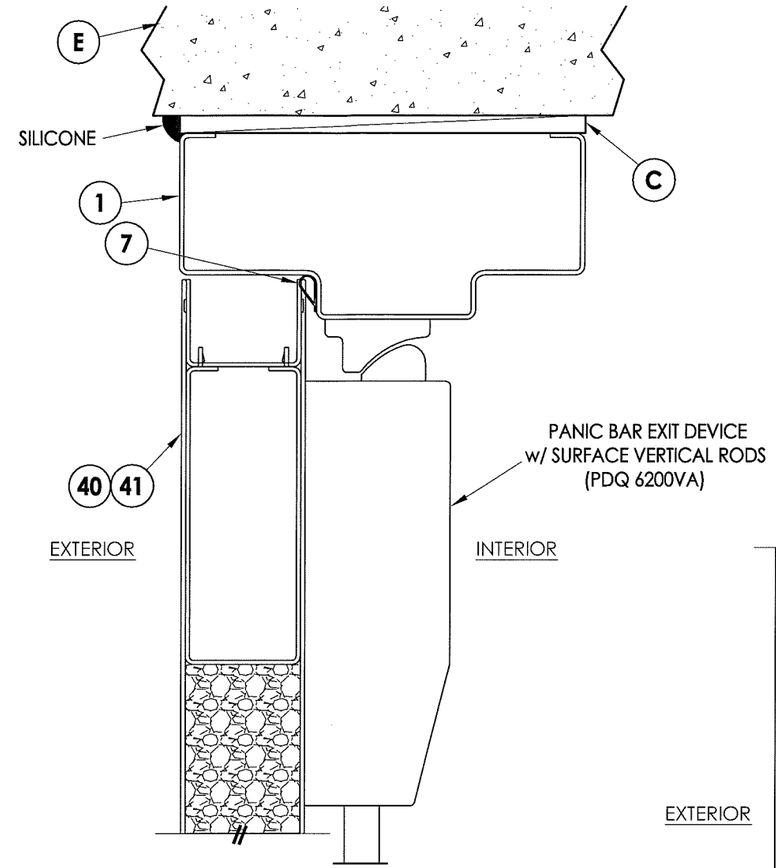

3/6 VERTICAL CROSS SECTION
w/ SURFACE VERTICAL RODS

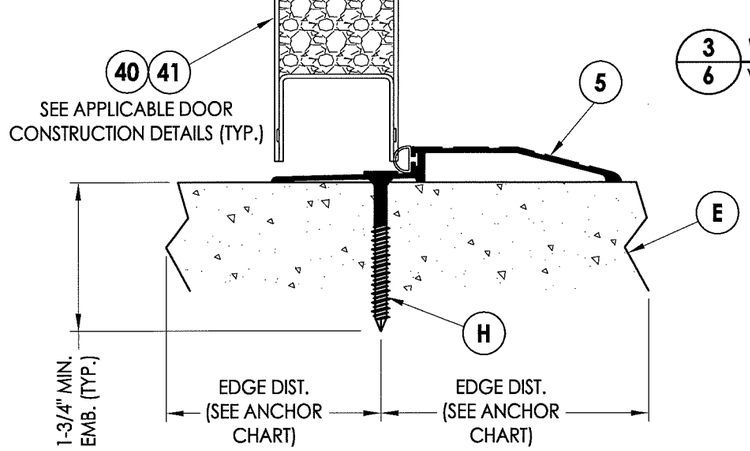

2/6 VERTICAL CROSS SECTION

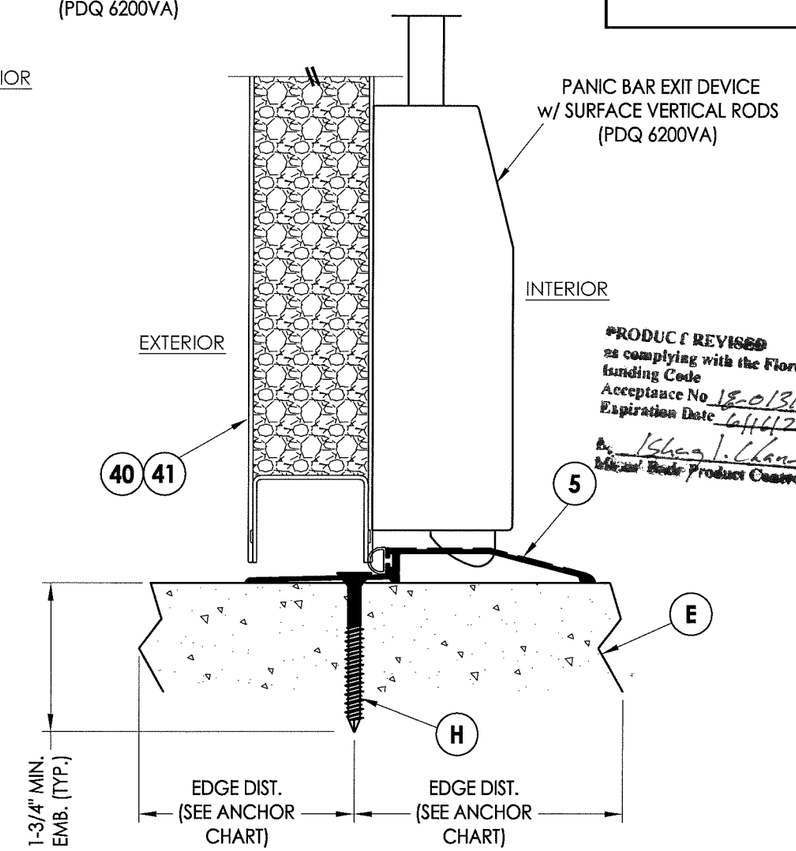

4/6 VERTICAL CROSS SECTION
w/ SURFACE VERTICAL RODS

PRODUCT REVISED
as complying with the Florida
Building Code
Acceptance No 18-0131.07
Expiration Date 6/14/21
By Sheng L. Chang
Miami-Dade Product Control

STATE OF FLORIDA
LYNDON F. SCHMIDT
LICENSE No 43409
PROFESSIONAL ENGINEER

Documents Prepared By:
Lyndon F. Schmidt
P.E. No. 43409

RW BUILDING CONSULTANTS, INC.
P.O. Box 230, Valrico, FL 33595
Phone No.: 813.659.9197
FBPE C.A. No. 9813

PRODUCT: LS18 STEEL DOOR

PART OR ASSEMBLY: VERTICAL CROSS SECTIONS

NO.	DATE	REVISIONS	BY
2	1/17/18	UPDATE TO 6TH ED. (2017) FBC	LFS
1	5/26/16	REVISE ANCHORING	LFS

DATE: 10/29/15
SCALE: N.T.S.
DWG. BY: JK
CHK. BY: LFS
DRAWING NO.: S-4114
SHEET 6 OF 15

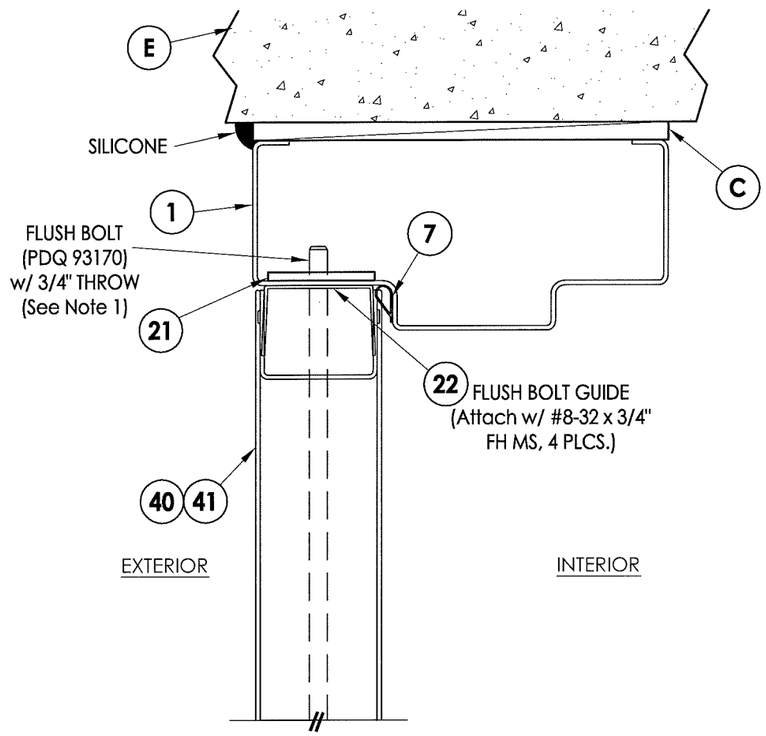

1/7 VERTICAL CROSS SECTION

Note:
1. Flush Bolt required w/ Cylindrical Lock & Deadbolt only.

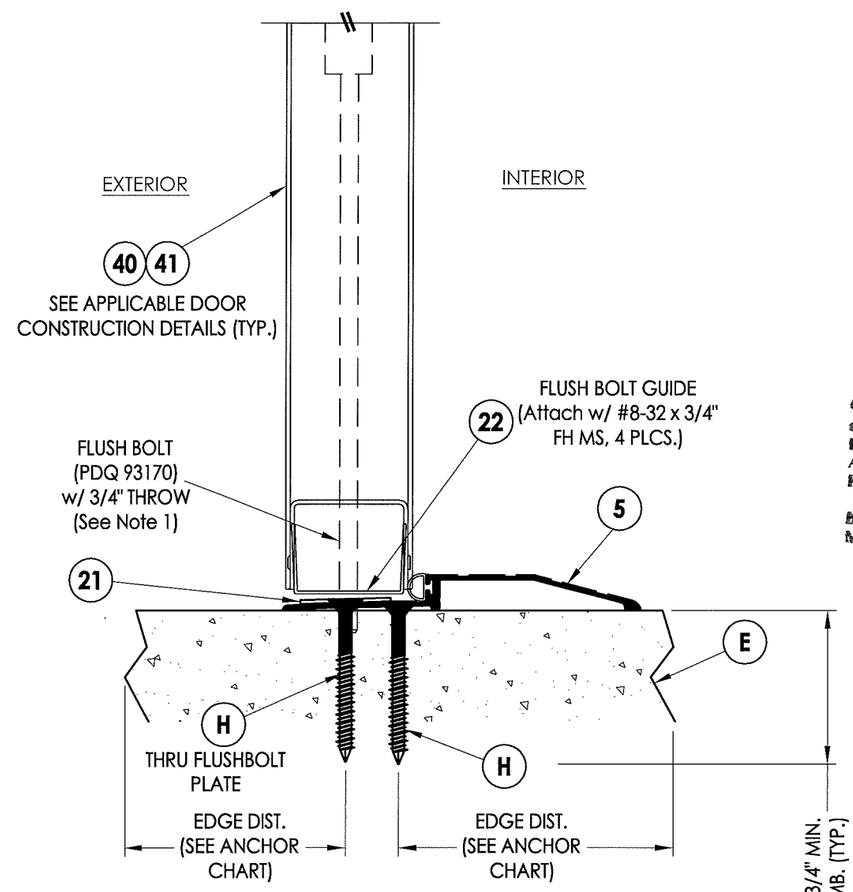

2/7 VERTICAL CROSS SECTION

PRODUCT REVISED
as complying with the Florida
Building Code
Acceptance No 18-0131.07
Expiration Date 6/16/21
By Shaq L. Chandler
Miami-Dade Product Control

LYNDON F. SCHMIDT
LICENSE
No 43409
STATE OF
PROFESSIONAL ENGINEER
FLORIDA

Documents Prepared By:
Lyndon F. Schmidt
P.E. No. 43409

RW BUILDING CONSULTANTS, INC.
P.O. Box 230, Valrico, FL 33595
Phone No.: 813.659.9197
FBPE C.A. No. 9813

PRODUCT: LS18 STEEL DOOR

PART OR ASSEMBLY: VERTICAL CROSS SECTIONS

REVISIONS

NO.	DATE	BY
2	1/17/18	LFS
1	5/26/16	LFS

UPDATE TO 6TH ED. (2017) FBC
REVISE ANCHORING

DATE: 10/29/15
SCALE: N.T.S.
DWG. BY: JK
CHK. BY: LFS
DRAWING NO.: S-4114
SHEET 7 OF 15

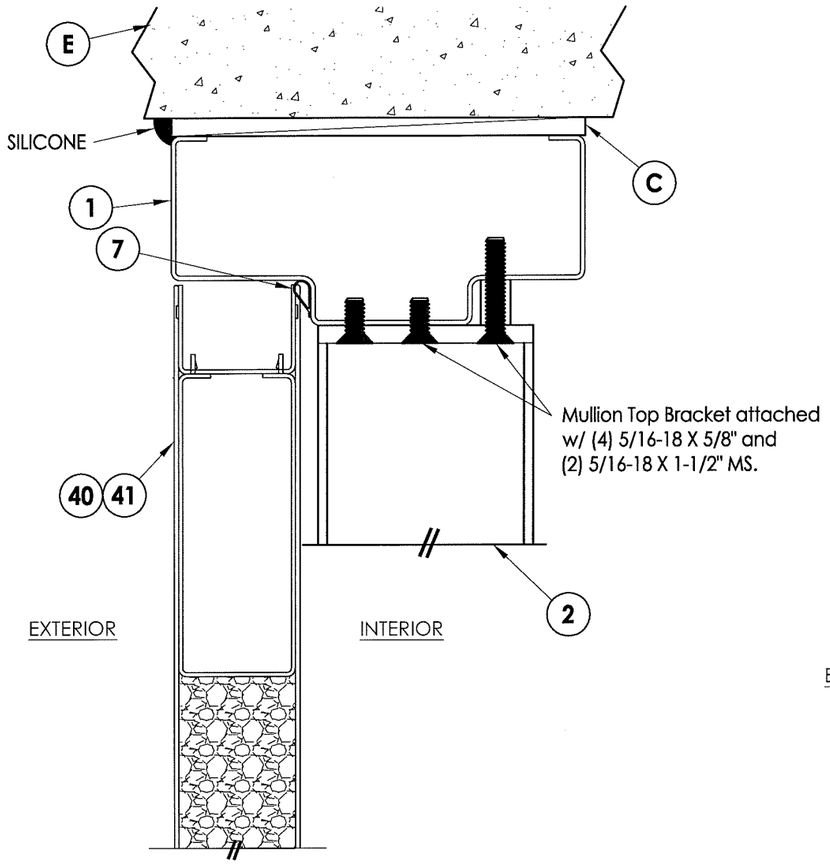

1/8 VERTICAL CROSS SECTION
w/ REMOVABLE MULLION (PDQ 9200M-11)

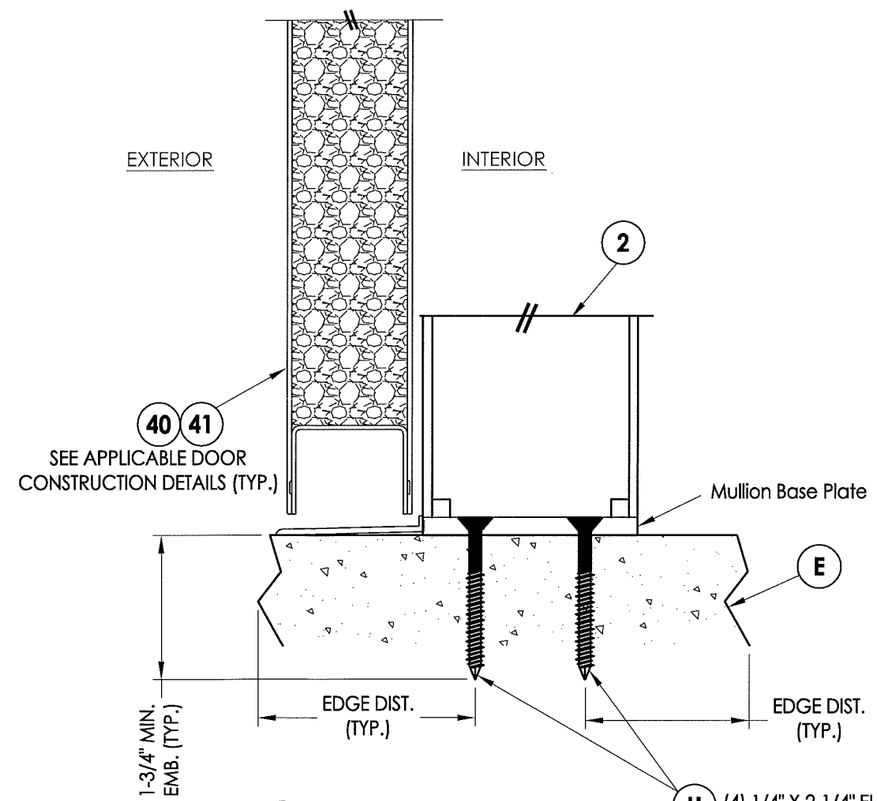

2/8 VERTICAL CROSS SECTION
w/ REMOVABLE MULLION (PDQ 9200M-11)

(NOTE: Outswing threshold not shown for clarity)

H (4) 1/4" X 2-1/4" ELCO Ultracon Concrete Anchors through mullion base plate. Anchors require a 1-3/4" min. embedment, 1-1/2" min. o.c. spacing and 2-1/2" min. edge distance.

PRODUCT REVISED
as complying with the Florida
Building Code
Acceptance No. 15-0131.07
Expiration Date 6/16/21
By Shaq L. Chaunt
Mgr. w/ Dade Product Control

STATE OF FLORIDA
LYNDON F. SCHMIDT
LICENSE
No 43409
PROFESSIONAL ENGINEER

Documents Prepared By:
Lyndon F. Schmidt
P.E. No. 43409

RW BUILDING CONSULTANTS, INC.
P.O. Box 230, Valrico, FL 33595
Phone No.: 813.659.9197
FBPE C.A. No. 9813

PRODUCT: LS18 STEEL DOOR

PART OR ASSEMBLY: VERTICAL CROSS SECTIONS

NO.	DATE	REVISIONS	BY
2	1/17/18	UPDATE TO 6TH ED. (2017) FBC	LFS
1	5/26/16	REVISE ANCHORING	LFS

DATE: 10/29/15
SCALE: N.T.S.
DWG. BY: JK
CHK. BY: LFS
DRAWING NO.: S-4114
SHEET 8 OF 15

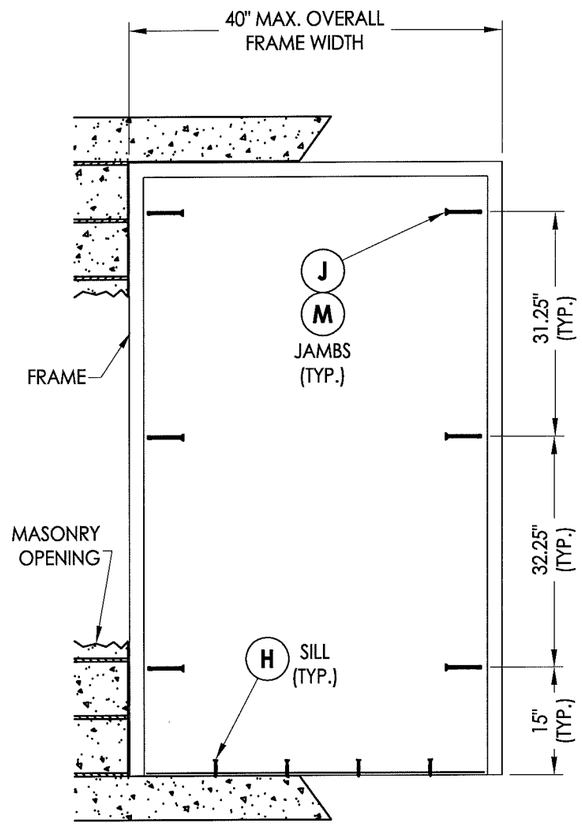

FRAME ANCHORING
Masonry Construction
Concrete Anchors

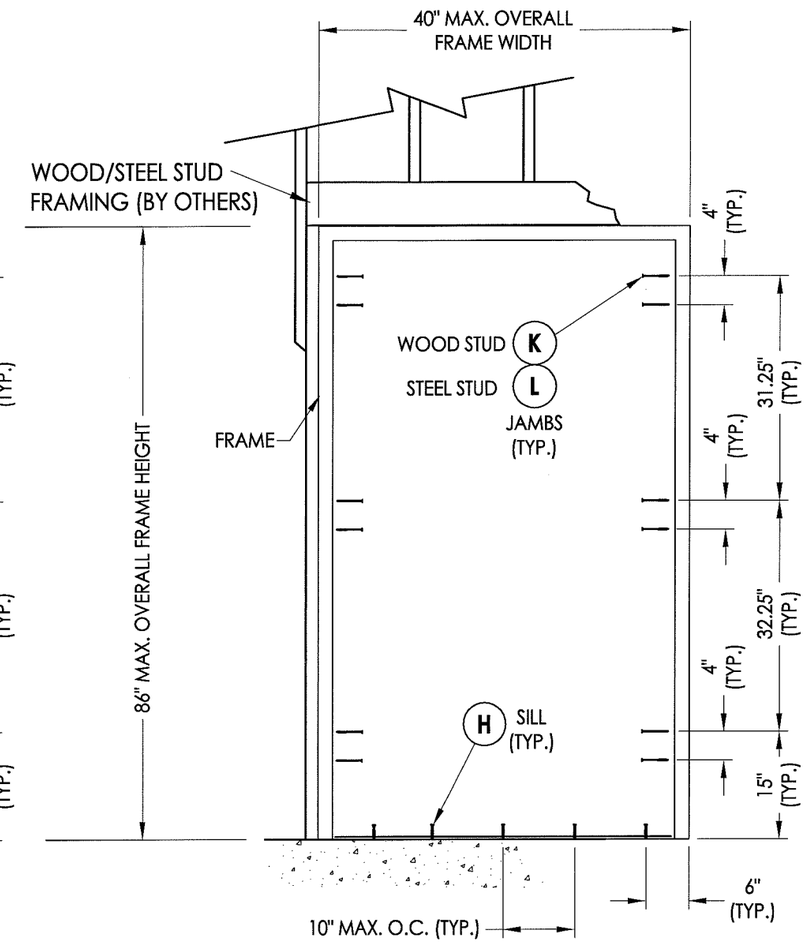

FRAME ANCHORING
Wood/Steel Stud

7'-0" SINGLE DOOR

CONCRETE ANCHOR NOTES:

1. Concrete screw locations at the corners may be adjusted to maintain a minimum 1" edge distance to mortar joints. If concrete screw locations noted as "MAX. O.C." must be adjusted to maintain the minimum edge distance to mortar joints, additional concrete screws may be required to ensure the maximum on center dimension is not exceeded.
2. Concrete anchor table:

ANCHOR TYPE	ANCHOR LOCATION	ANCHOR SIZE	MANUFACTURER	MIN. EDGE DISTANCE	MIN. EMBEDMENT
CONCRETE ANCHOR SCREW	JAMBS	3/8"	LDT TAPCON® (ITW BUILDEX)	3"	1-1/2"
	SILL	1/4"	ULTRACON® (ELCO)	2-1/2"	1-3/4"
CONCRETE SLEEVE ANCHOR	JAMBS	3/8"	DYNABOLT SLEEVE ANCHOR® (ITW REDHEAD)	2-1/4"	1-1/2"

PRODUCT REVISED
as complying with the Florida
Building Code
Acceptance No. 18-0131.07
Expiration Date 6/16/21
Miami-Dade Product Control

LYNDON F. SCHMIDT
LICENSE
No 43409
STATE OF
PROFESSIONAL ENGINEER
FLORIDA

Documents Prepared By:
Lyndon F. Schmidt
P.E. No. 43409
R.W. BUILDING CONSULTANTS, INC.
P.O. Box 230, Valrico, FL 33595
Phone No.: 813.659.9197
FBPE C.A. No. 9813

PRODUCT: LS18 STEEL DOOR

PART OR ASSEMBLY: FRAME ANCHORING X (7'-0" DOOR)

NO.	DATE	REVISIONS	BY
2	1/17/18	UPDATE TO 6TH ED. (2017) FBC	LFS
1	5/26/16	REVISE ANCHORING	LFS

DATE: 10/29/15
SCALE: N.T.S.
DWG. BY: JK
CHK. BY: LFS
DRAWING NO.: S-4114
SHEET 9 OF 15

R:\Clients\Vision Hollow Metal Permanent\H - Dade County Submittal\NOA 15-0611.02\2017 FBC Revision\S-4114 REV1.dwg, 9.2

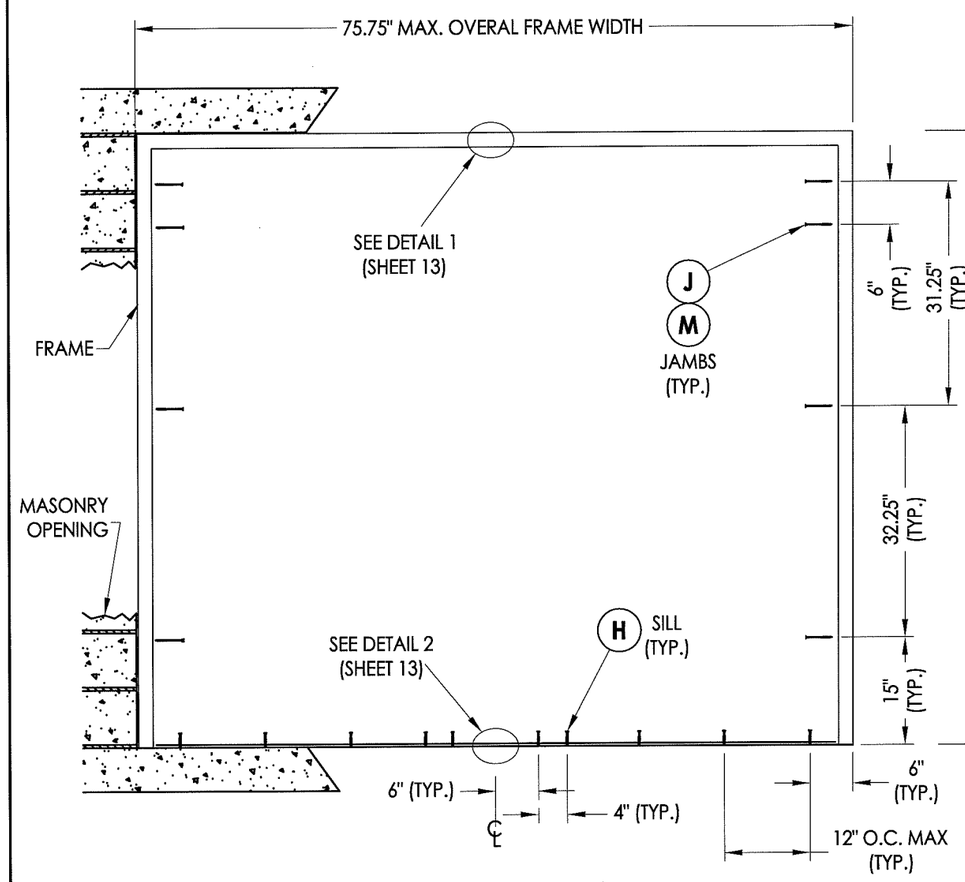

FRAME ANCHORING
Masonry Construction
Concrete Anchors

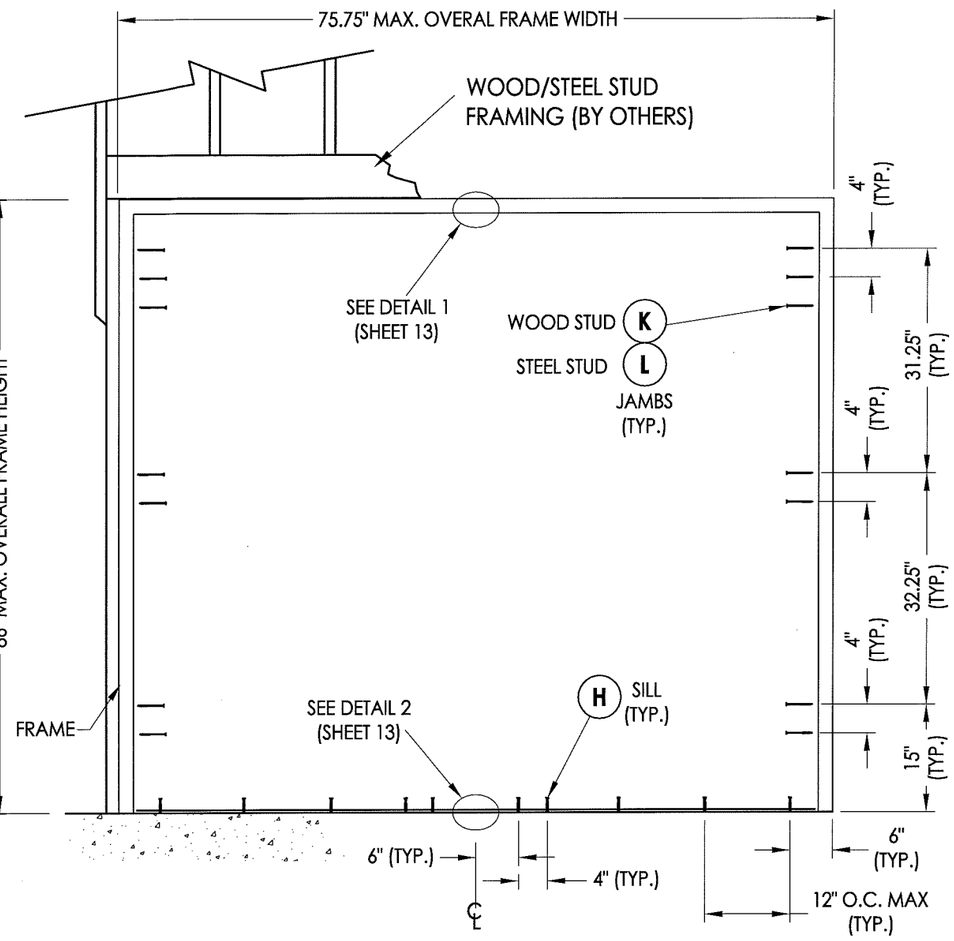

FRAME ANCHORING
Wood/Steel Stud

7'-0" DOUBLE DOOR

CONCRETE ANCHOR NOTES:

1. *Concrete screw locations at the corners may be adjusted to maintain a minimum 1" edge distance to mortar joints. If concrete screw locations noted as "MAX. O.C." must be adjusted to maintain the minimum edge distance to mortar joints, additional concrete screws may be required to ensure the maximum on center dimension is not exceeded.*
2. *Concrete anchor table:*

ANCHOR TYPE	ANCHOR LOCATION	ANCHOR SIZE	MANUFACTURER	MIN. EDGE DISTANCE	MIN. EMBEDMENT
CONCRETE ANCHOR SCREW	JAMBS	3/8"	LDT TAPCON® (ITW BUILDEX)	3"	1-1/2"
	SILL	1/4"	ULTRACON® (ELCO)	2-1/2"	1-3/4"
CONCRETE SLEEVE ANCHOR	JAMBS	3/8"	DYNABOLT SLEEVE ANCHOR® (ITW REDHEAD)	2-1/4"	1-1/2"

PRODUCT REVISED
as complying with the Florida
Building Code
Acceptance No. 18-0131.07
Expiration Date 6/16/21
Miami-Dade Product Control

LYNDON F. SCHMIDT
LICENSE
No 43409
STATE OF FLORIDA
PROFESSIONAL ENGINEER

Documents Prepared By:
Lyndon F. Schmidt
P.E. No. 43409
RW BUILDING CONSULTANTS, INC.
P.O. Box 230, Valrico, FL 33595
Phone No.: 813.659.9197
FBPE C.A. No. 9813

PRODUCT: LS18 STEEL DOOR

PART OR ASSEMBLY: FRAME ANCHORING XX (7'-0" DOOR)

NO.	DATE	REVISIONS	BY
2	1/17/18	UPDATE TO 6TH ED. (2017) FBC	LFS
1	5/26/16	REVISE ANCHORING	LFS

DATE: 10/29/15
SCALE: N.T.S.
DWG. BY: JK
CHK. BY: LFS
DRAWING NO.: S-4114
SHEET 10 OF 15

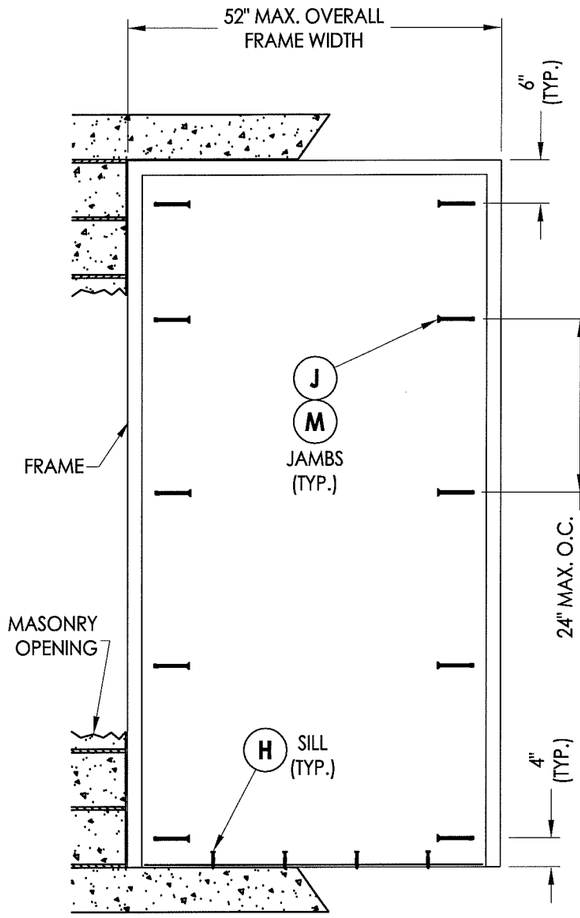

FRAME ANCHORING
Masonry Construction
Concrete Anchors

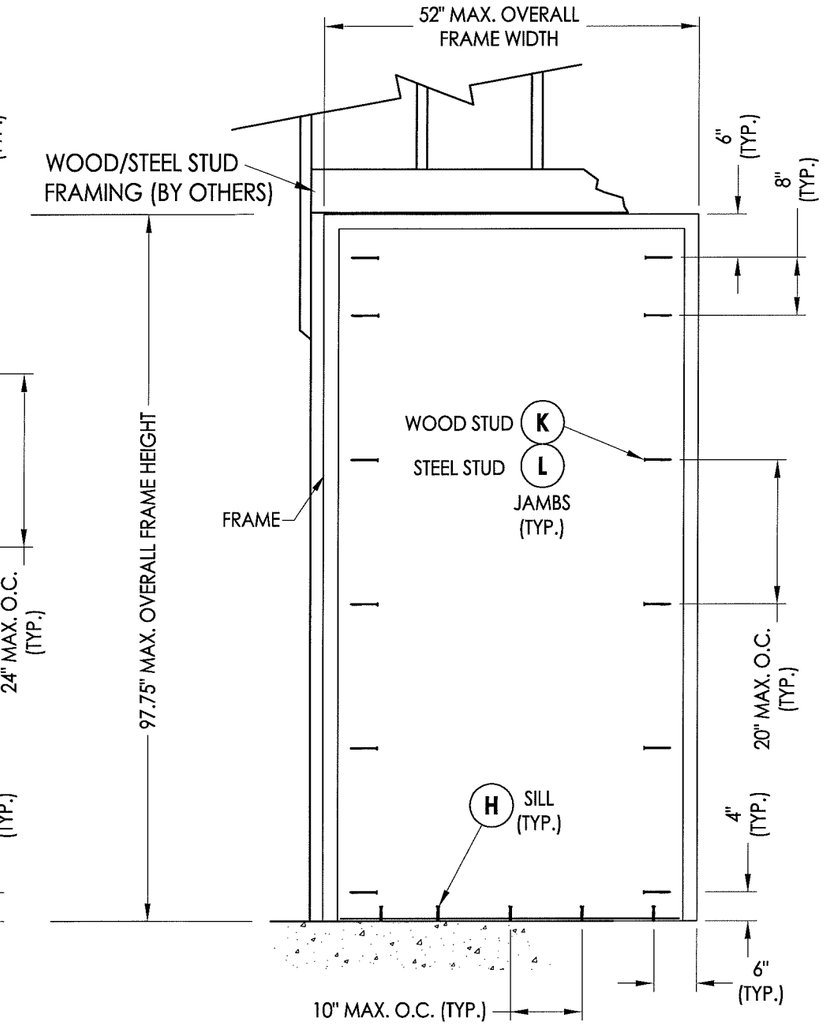

FRAME ANCHORING
Wood/Steel Stud

8'-0" SINGLE DOOR

CONCRETE ANCHOR NOTES:

1. *Concrete screw locations at the corners may be adjusted to maintain a minimum 1" edge distance to mortar joints. If concrete screw locations noted as "MAX. O.C." must be adjusted to maintain the minimum edge distance to mortar joints, additional concrete screws may be required to ensure the maximum on center dimension is not exceeded.*
2. *Concrete anchor table:*

ANCHOR TYPE	ANCHOR LOCATION	ANCHOR SIZE	MANUFACTURER	MIN. EDGE DISTANCE	MIN. EMBEDMENT
CONCRETE ANCHOR SCREW	JAMBS	3/8"	LDT TAPCON® (ITW BUILDEX)	3"	1-1/2"
	SILL	1/4"	ULTRACON® (ELCO)	2-1/2"	1-3/4"
CONCRETE SLEEVE ANCHOR	JAMBS	3/8"	DYNABOLT SLEEVE ANCHOR® (ITW REDHEAD)	2-1/4"	1-1/2"

PRODUCT REVISED
as complying with the Florida
Building Code
Acceptance No. 18-0131.07
Expiration Date 6/16/21
Mitsui Product Control

LYNDON F. SCHMIDT
LICENSE
No 43409
STATE OF FLORIDA
PROFESSIONAL ENGINEER

Documents Prepared By:
Lyndon F. Schmidt
P.E. No. 43409
RW BUILDING CONSULTANTS, INC.
P.O. Box 230, Valrico, FL 33595
Phone No.: 813.659.9197
FBPE C.A. No. 9813

PRODUCT: LS18 STEEL DOOR

PART OR ASSEMBLY: FRAME ANCHORING X (8'-0" DOOR)

NO.	DATE	REVISIONS	BY
2	1/17/18	UPDATE TO 6TH ED. (2017) FBC	LFS
1	5/26/16	REVISE ANCHORING	LFS

DATE: 10/29/15
SCALE: N.T.S.
DWG. BY: JK
CHK. BY: LFS
DRAWING NO.: S-4114
SHEET 11 OF 15

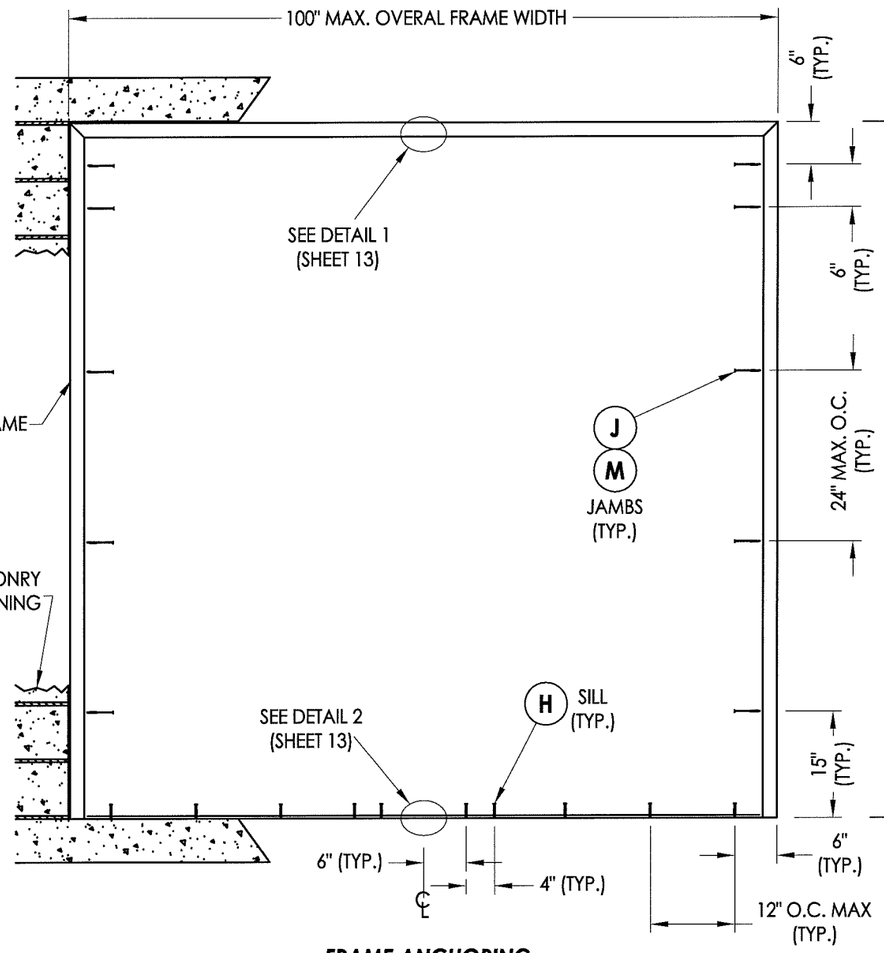

FRAME ANCHORING
Masonry Construction
Concrete Anchors

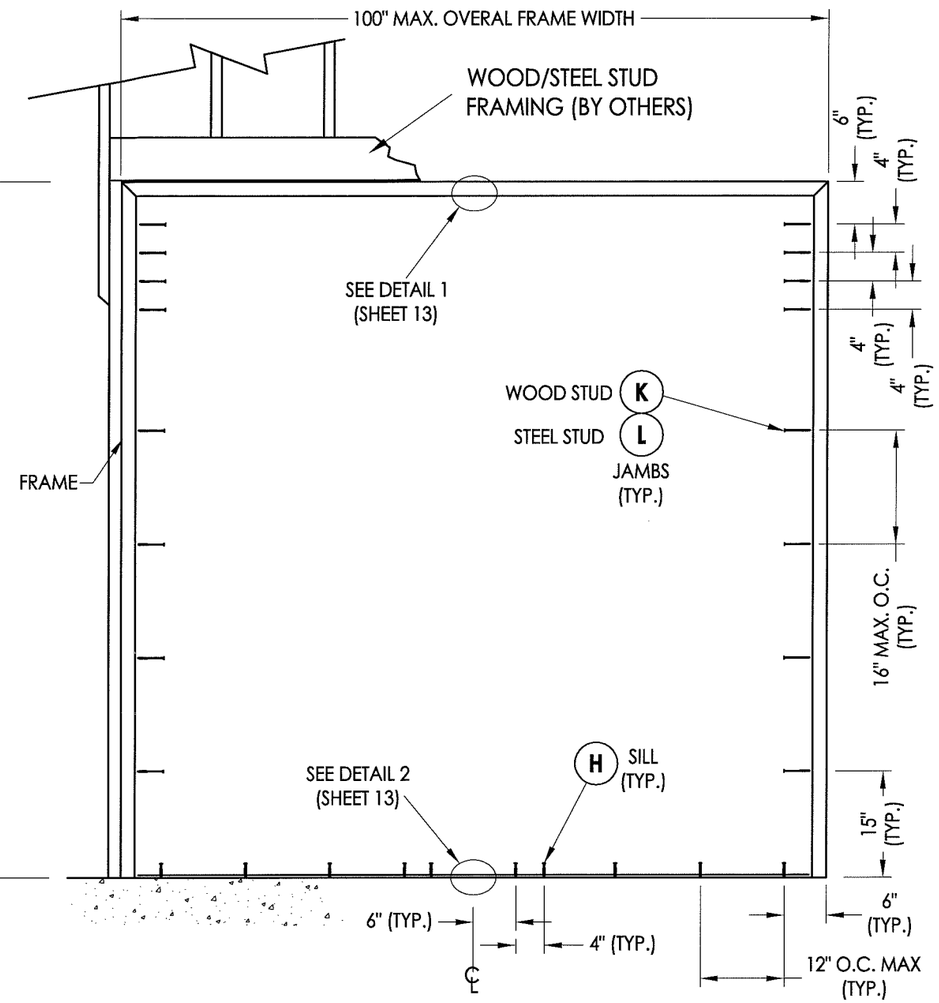

FRAME ANCHORING
Wood/Steel Stud

8'-0" DOUBLE DOOR

CONCRETE ANCHOR NOTES:

1. Concrete screw locations at the corners may be adjusted to maintain a minimum 1" edge distance to mortar joints. If concrete screw locations noted as "MAX. O.C." must be adjusted to maintain the minimum edge distance to mortar joints, additional concrete screws may be required to ensure the maximum on center dimension is not exceeded.
2. Concrete anchor table:

ANCHOR TYPE	ANCHOR LOCATION	ANCHOR SIZE	MANUFACTURER	MIN. EDGE DISTANCE	MIN. EMBEDMENT
CONCRETE ANCHOR SCREW	JAMBS	3/8"	LDT TAPCON® (ITW BUILDEX)	3"	1-1/2"
	SILL	1/4"	ULTRACON® (ELCO)	2-1/2"	1-3/4"
CONCRETE SLEEVE ANCHOR	JAMBS	3/8"	DYNABOLT SLEEVE ANCHOR® (ITW REDHEAD)	2-1/4"	1-1/2"

PRODUCT REVISED
as complying with the Florida
Building Code
Acceptance No 18-0131.07
Expiration Date 6/16/21
Miami-Dade Product Control

STATE OF FLORIDA
LICENSE
No 43409
LYNDON F. SCHMIDT
PROFESSIONAL ENGINEER

Documents Prepared By:
Lyndon F. Schmidt
P.E. No. 43409
R.W. BUILDING CONSULTANTS, INC.
P.O. Box 230, Valrico, FL 33595
Phone No.: 813.659.9197
FBPE C.A. No. 9813

PRODUCT: LS18 STEEL DOOR

PART OR ASSEMBLY: FRAME ANCHORING XX' (8'-0" DOOR)

NO.	DATE	REVISIONS	BY
2	1/17/18	UPDATE TO 6TH ED. (2017) FBC	LFS
1	5/26/16	REVISE ANCHORING	LFS

DATE: 10/29/15
SCALE: N.T.S.
DWG. BY: JK
CHK. BY: LFS
DRAWING NO.: S-4114
SHEET 12 OF 15

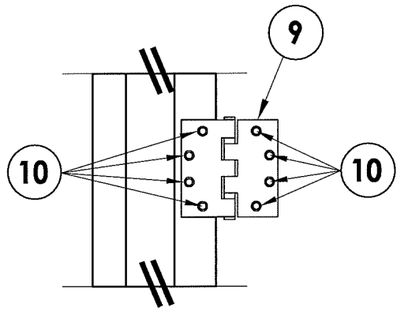

HINGE DETAIL

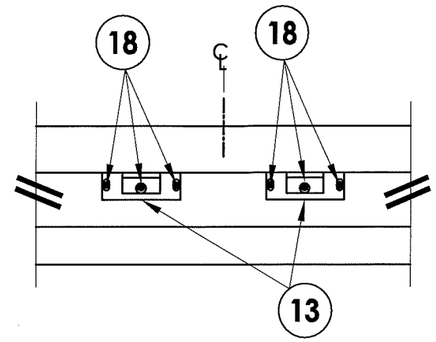

DETAIL 1
Vertical Surface Rod Strike Plate
@ Head

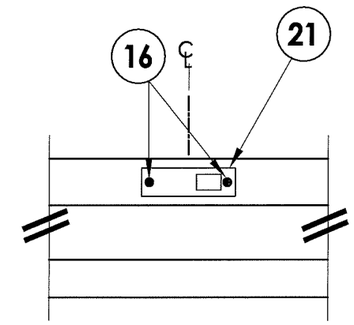

DETAIL 1
Flush Bolt Strike Plate @ Head
(Inactive Door Panel)

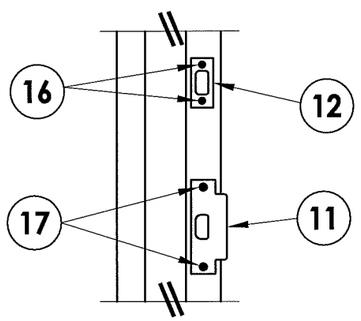

STRIKE DETAIL
Latch & Deadbolt

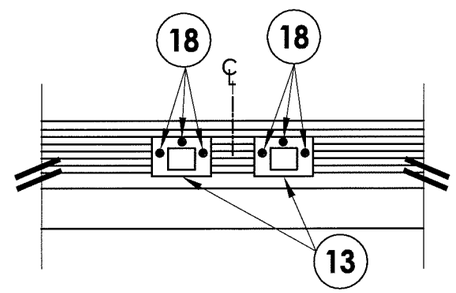

DETAIL 2
Vertical Surface Rod Strike Plate
@ Sill

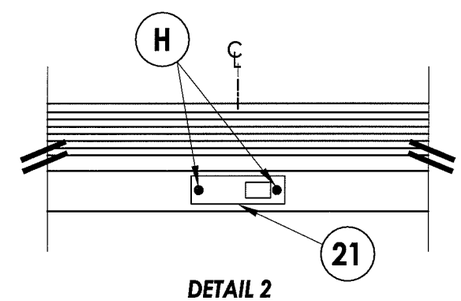

DETAIL 2
Flush Bolt Strike Plate @ Sill
(Inactive Door Panel)

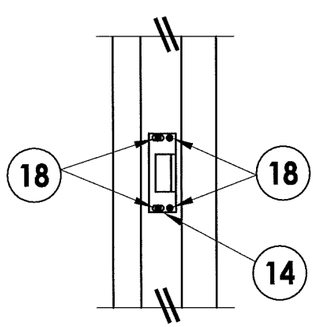

STRIKE DETAIL @ FRAME
Rim Panic Exit Device

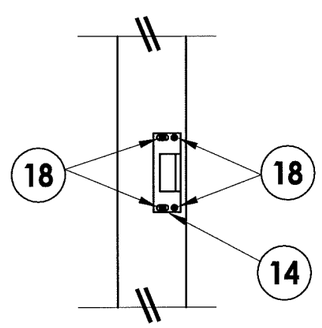

STRIKE DETAIL @ MULLION
Rim Panic Exit Device

PRODUCT REVISED
as complying with the Florida
Building Code
Acceptance No. 18-0131.07
Expiration Date 6/16/21
By: Shaq L. Chaudhr
Miami-Dade Product Control

STATE OF FLORIDA
LICENSE
No 43409
LYNDON F. SCHMIDT
PROFESSIONAL ENGINEER

Documents Prepared By:
Lyndon F. Schmidt
P.E. No. 43409

RW BUILDING CONSULTANTS, INC.
P.O. Box 230, Valrico, FL 33595
Phone No.: 813.659.9197
FBPE C.A. No. 9813

PRODUCT: LS18 STEEL DOOR

PART OR ASSEMBLY: HARDWARE DETAILS

NO.	DATE	REVISIONS	BY
2	1/17/18	UPDATE TO 6TH ED. (2017) FBC	LFS
1	5/26/16	REVISE ANCHORING	LFS

DATE: 10/29/15
SCALE: N.T.S.
DWG. BY: JK
CHK. BY: LFS
DRAWING NO.: S-4114
SHEET 13 OF 15

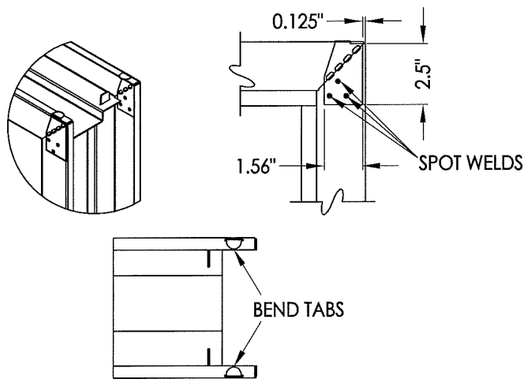

FRAME CORNER DETAILS

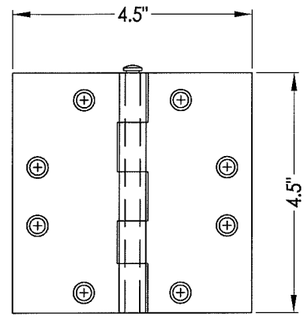

9 STEEL HINGE
0.134" THICK

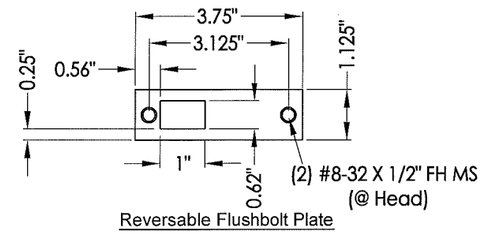

Reversable Flushbolt Plate

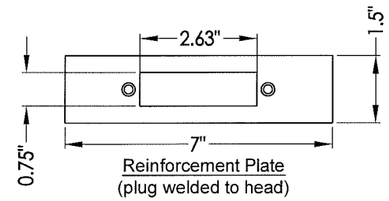

Reinforcement Plate
(plug welded to head)

21 FLUSHBOLT FRAME REINFORCEMENT
16 GA STEEL

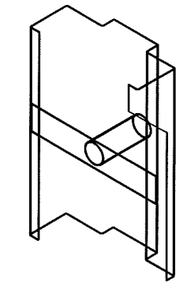

30 EMA PIPE ANCHOR
18 GA STEEL

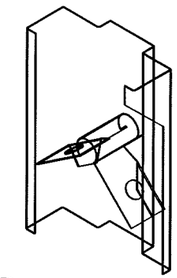

31 EMA BUTTERFLY ANCHOR
18 GA STEEL

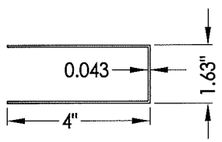

25 RIM PANIC BOX
18 GA. GALV. STEEL

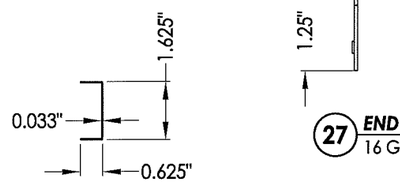

26 PERIMETER GLAZED CHANNEL REINFORCEMENT
20 GA. GALV. STEEL

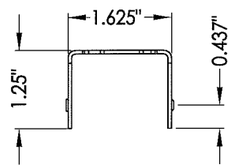

27 END CHANNEL
16 GA STEEL

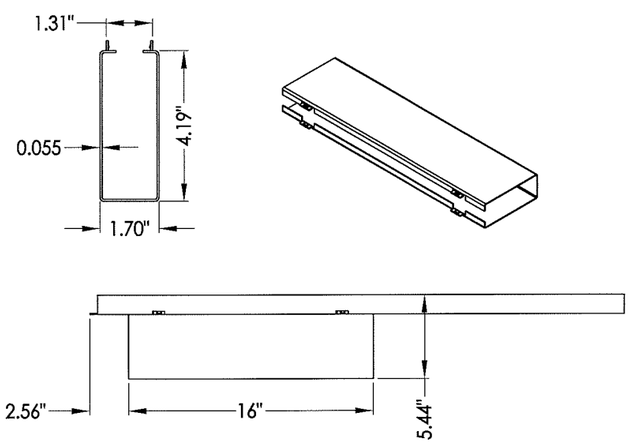

24 CLOSER BOX
16 GA GALV. STEEL

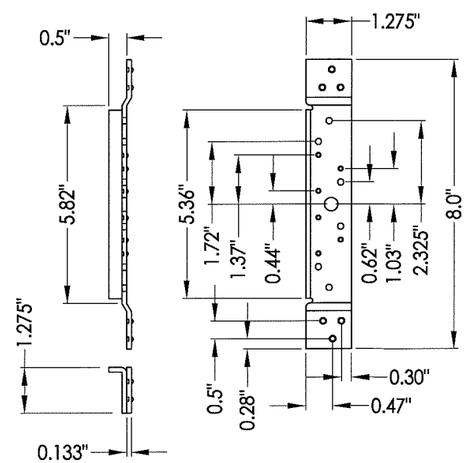

20 HINGE REINFORCEMENT
10 GA STEEL

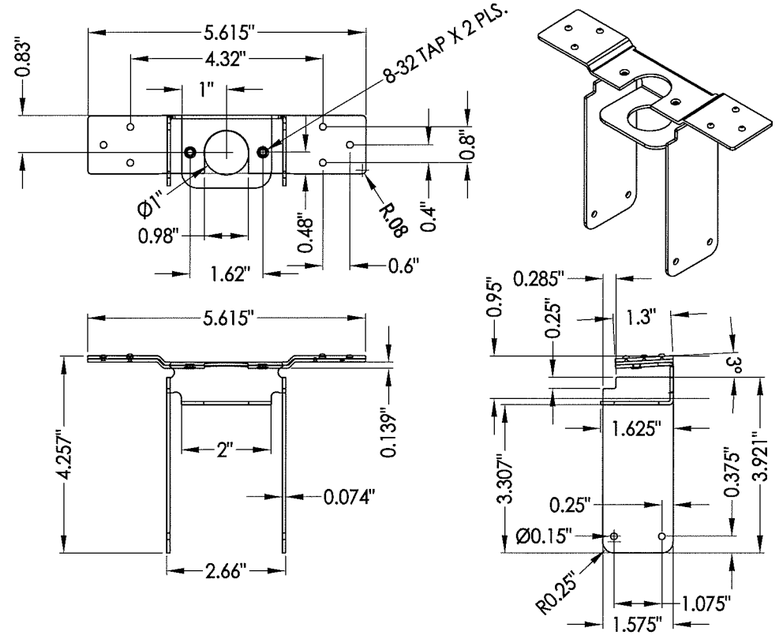

23 CYLINDRICAL LOCK REINFORCEMENT

PRODUCT REVIEWED
as complying with the Florida Building Code
Acceptance No. 18-6131.01
Expiration Date 6/16/21
Director State Product Control

Documents Prepared By:
Lyndon F. Schmidt
P.E. No. 43409

BUILDING CONSULTANTS, INC.
P.O. Box 230, Valrico, FL 33595
Phone No.: 813.659.9197
FBPE C.A. No. 9813

PRODUCT: LS18 STEEL DOOR

PART OR ASSEMBLY: BILL OF MATERIALS & COMPONENTS

REVISIONS

NO.	DATE		BY
2	1/17/18	UPDATE TO 6TH ED. (2017) FBC	LFS
1	5/26/16	REVISE ANCHORING	LFS

DATE: 10/29/15
SCALE: N.T.S.
DWG. BY: JK
CHK. BY: LFS
DRAWING NO.: S-4114
SHEET 14 OF 15

BILL OF MATERIALS

ITEM #	DESCRIPTION	MATERIAL
B	2X STUD FRAMING (G>= 0.55)	WOOD
C	1/4" MAX. SHIM SPACE	-
E	MASONRY - 3,000 PSI MIN. CONCRETE CONFORMING TO ACI 301 OR HOLLOW BLOCK (2000 PSI MIN., GROUT FILLED) CONFORMING TO ASTM C90	CONCRETE
H	1/4" X 2-1/4" PFH ELCO ULTRACON CONCRETE SCREW (SEE CONCRETE ANCHOR TABLE)	STEEL
J	3/8" X 5" PFH DYNABOLT SLEEVE ANCHOR (SEE CONCRETE ANCHOR TABLE)	STEEL
K	3/8" X 5" FH LAG SCREW (2-1/8" MIN. EMBEDMENT)	STEEL
L	3/8" Ø ELCO DRIL-FLEX SMS (MUST PENETRATE MIN. 3 THREADS THRU STEEL STUD)	STEEL
M	3/8" X 5" LDT TAPCON CONCRETE SCREW (SEE CONCRETE ANCHOR TABLE)	STEEL
X	STEEL STUD (0.125" MIN. THK, Fu = 50 ksi, Fy = 33 ksi)	STEEL
1	HOLLOW METAL FRAME (0.054" MIN. THK GALVANNEAL STEEL, Fy=54,000 PSI MIN.))	-
2	REMOVABLE MULLION (PDQ 9200M-11)	STEEL
3	"Z" ASTRAGAL (VISION HOLLOW METAL)	STEEL
3A	HURRICANE LOUVER (VISION HOLLOW METAL)	STEEL
5	OUTSWING BUMP THRESHOLD (HAGER 477S)	ALUM
6	ASTRAGAL GASKET (HAGER 849S)	-
7	WEATHERSTRIP (HAGER 736 PRESS-ON)	-
8	FRAME WEATHERSTRIP (HAGER 875S)	-
9	STEEL HINGE (4.5" X 4.5") (HAGER)	STEEL
10	#12-24 x 1/2" FH MACHINE SCREW	STEEL
11	LATCH STRIKE PLATE	STEEL
12	DEADBOLT STRIKE PLATE	STEEL
13	VERTICAL SURFACE ROD STRIKE PLATE	STEEL
14	RIM PANIC BAR EXIT DEVICE STRIKE PLATE	STEEL
16	#8 x 3/4" FH SCREWS	STEEL
17	#12 x 13/16" FH SCREWS	STEEL
18	1/4-20 x 3/4" PH THREAD CUTTING MACHINE SCREWS	STEEL
20	HINGE REINFORCEMENT (10 GA.)	STEEL
21	FLUSH BOLT GUIDE (0.050" THK.)	STEEL
22	FLUSH BOLT FRAME REINFORCMENT (16 GA)	STEEL
23	CYLINDRICAL LOCK REINFORCEMENT	STEEL
24	CLOSER BOX	STEEL
25	RIM PANIC BOX	STEEL
26	PERIMETER CHANNEL REINFORCEMENT	STEEL
27	END CHANNEL	STEEL
30	EMA PIPE ANCHOR (18 GA)	STEEL
31	EMA BUTTERFLY ANCHOR (18 GA)	STEEL
40	LOUVERED STEEL DOOR PANEL (7'-0" DOOR)	STEEL
41	LOUVERED STEEL DOOR PANEL (8'-0" DOOR)	STEEL

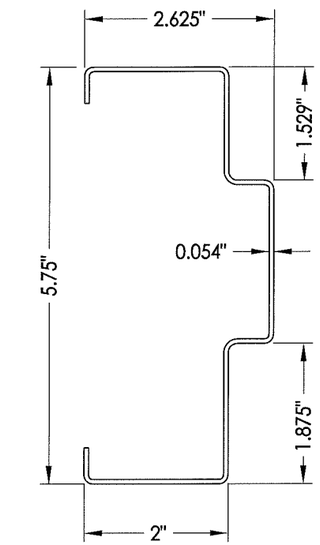

1 HOLLOW METAL FRAME

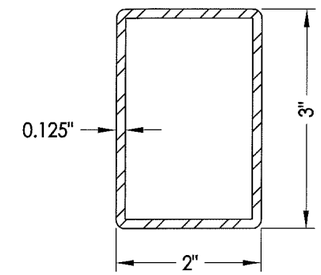

2 MULLION
PDQ 9200M-11 SERIES

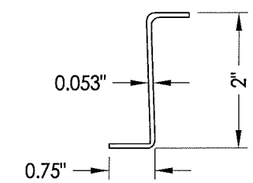

3 "Z" ASTRAGAL

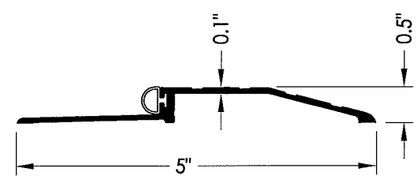

5 OUTSWING BUMP THRESHOLD
HAGER 477S

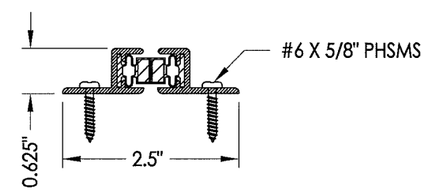

6 ASTRAGAL GASKET

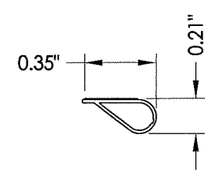

7 WEATHERSTRIP

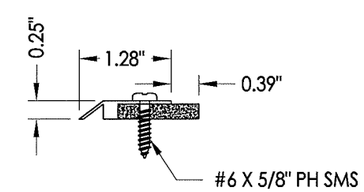

8 FRAME WEATHERSTRIP

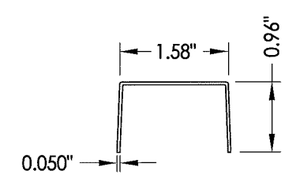

22 FLUSHBOLT GUIDE

PRODUCT REVISED
as complying with the Florida
Building Code
Acceptance No 18-0131.07
Expiration Date JUNE 16, 2021
Product Control

LICENSE No 43409 STATE OF FLORIDA PROFESSIONAL ENGINEER L. F. SCHMIDT

Documents Prepared By:
Lyndon F. Schmidt
P.E. No. 43409

RW BUILDING CONSULTANTS, INC.
P.O. Box 230, Valrico, FL 33595
Phone No.: 813.659.9197
FBPE C.A. No. 9813

PRODUCT: LS18 STEEL DOOR

PART OR ASSEMBLY: BILL OF MATERIALS & COMPONENTS

NO.	DATE	REVISIONS	BY
2	1/17/18	UPDATE TO 6TH ED. (2017) FBC	LFS
1	5/26/16	REVISE ANCHORING	LFS

DATE: 10/29/15
SCALE: N.T.S.
DWG. BY: JK
CHK. BY: LFS
DRAWING NO.: S-4114
SHEET 15 OF 15

R:\Clients\Vision Hollow Metal Permanent\H - Dade County Submittal\NOA 15-0611.02\2017 FBC Revision\S-4114 REV1.dwg, 15.2