MIAMI-DADE COUNTY
DEPARTMENT OF REGULATORY AND ECONOMIC RESOURCES (RER)
BOARD AND CODE ADMINISTRATION DIVISION

MIAMI–DADE COUNTY
PRODUCT CONTROL SECTION
11805 SW 26 Street, Room 208
T (786) 315–2590 F (786) 315–2599
www.miamidade.gov/economy

NOTICE OF ACCEPTANCE (NOA)

Eurotech Industries, Inc.
4201 NE 12th Terrace
Ft. Lauderdale, FL 33334

SCOPE:

This NOA is being issued under the applicable rules and regulations governing the use of construction materials. The documentation submitted has been reviewed and accepted by Miami–Dade County RER–Product Control Section to be used in Miami–Dade County and other areas where allowed by the Authority Having Jurisdiction (AHJ).

This NOA shall not be valid after the expiration date stated below. The Miami–Dade County Product Control Section (In Miami–Dade County) and/ or the AHJ (in areas other than Miami–Dade County) reserve the right to have this product or material tested for quality assurance purposes. If this product or material fails to perform in the accepted manner, the manufacturer will incur the expense of such testing and the AHJ may immediately revoke, modify, or suspend the use of such product or material within their jurisdiction. RER reserves the right to revoke this acceptance, if it is determined by Miami–Dade County Product Control Section that this product or material fails to meet the requirements of the applicable building code.

This product is approved as described herein, and has been designed to comply with the Florida Building Code, including the High Velocity Hurricane Zone.

DESCRIPTION: Outswing Aluminum Casement Window – L.M.I.

APPROVAL DOCUMENT: Drawing **No. W03-80,** titled "Aluminum Casement Window (L.M.I.)", sheets 1 through 5 of 5, dated 09/05/03, with revision **H** dated 01/31/18, prepared by Al-Farooq Corporation, signed and sealed by Javad Ahmad, P.E., bearing the Miami-Dade County Product Control Revision stamp with the Notice of Acceptance number and expiration date by the Miami-Dade County Product Control Section.

MISSILE IMPACT RATING: Large and Small Missile Impact Resistant

LABELING: Each unit shall bear a permanent label with the manufacturer's name or logo, city, state, model/ series, and following statement: "Miami–Dade County Product Control Approved", unless otherwise noted herein.

RENEWAL of this NOA shall be considered after a renewal application has been filed and there has been no change in the applicable building code negatively affecting the performance of this product.

TERMINATION of this NOA will occur after the expiration date or if there has been a revision or change in the materials, use, and/ or manufacture of the product or process. Misuse of this NOA as an endorsement of any product, for sales, advertising or any other purposes shall automatically terminate this NOA. Failure to comply with any section of this NOA shall be cause for termination and removal of NOA.

ADVERTISEMENT: The NOA number preceded by the words Miami–Dade County, Florida, and followed by the expiration date may be displayed in advertising literature. If any portion of the NOA is displayed, then it shall be done in its entirety.

INSPECTION: A copy of this entire NOA shall be provided to the user by the manufacturer or its distributors and shall be available for inspection at the job site at the request of the Building Official.

This NOA **revises and renews NOA No. 15-0707.01** and consists of this page 1 and evidence pages E-1 and E-2, as well as approval document mentioned above.

The submitted documentation was reviewed by **Sifang Zhao, P.E.**

MIAMI-DADE COUNTY APPROVED

S.Z.
04/12/2018

Eurotech Industries, Inc.

NOTICE OF ACCEPTANCE: EVIDENCE SUBMITTED

1. EVIDENCE SUBMITTED UNDER PREVIOUS NOA's

A. DRAWINGS

1. Manufacturer's die drawings and sections.
(Submitted under NOA # 06-1019.03)

2. Drawing **No. W03-80,** titled "Aluminum Casement Window (L.M.I.)", sheets 1 through 5 of 5, dated 09/05/03, with revision G dated 12/03/15, prepared by Al-Farooq Corporation, signed and sealed by Javad Ahmad, P.E.

B. TESTS

1. Test reports on: 1) Air Infiltration Test, per FBC, TAS 202-94
2) Uniform Static Air Pressure Test, Loading per FBC, TAS 202-94
3) Water Resistance Test, per FBC, TAS 202-94
4) Forced Entry Test, per FBC 2411 3.2.1 and TAS 202-94
along with marked-up drawings and installation diagram of aluminum casement windows mulled side-by-side Test Report No. **HETI-03-1315** dated 05/12/03, and of a single aluminum casement window Test Report No. **HETI-03-1317** dated 05/14/03, both prepared by Hurricane Engineering & Testing Inc., signed and sealed by Rafael E. Droz-Seda, P.E. ***(Submitted under NOA # 06-1019.03)***

2. Test reports on: 1) Large Missile Impact Test per FBC, TAS 201-94
2) Cyclic Wind Pressure Loading per FBC, TAS 203-94
along with marked-up drawings and installation diagram of an aluminum casement windows mulled side-by-side Test Report No. **HETI-03-1829** dated 05/12/03, of a single aluminum casement windows Test Report No. **HETI-03-1822**, dated 01/23/04, both prepared by Hurricane Engineering & Testing Inc., signed and sealed by Rafael E. Droz-Seda, P.E. ***(Submitted under NOA # 06-1019.03)***

C. CALCULATIONS

1. Anchor verification calculations and structural analysis, complying with **FBC 5th Edition (2014)**, dated 06/02/15 and 11/25/15, prepared by Al-Farooq Corporation, signed and sealed by Javad Ahmad, P.E.

D. Glazing complies with **ASTM E1300-09 QUALITY ASSURANCE**

1. Miami-Dade Department of Regulatory and Economic Resources (RER).

E. MATERIAL CERTIFICATIONS

1. NOA No. **14-0916.11** issued to **Kuraray America, Inc.** for their **"SentryGlas® (Clear and White) Glass Interlayers"** dated 06/25/15, expiring on 07/04/18.

2. NOA No. **14-0423.17** issued to **Eastman Chemical Company (MA)** for their "**Saflex Clear and Color Glass Interlayers**" dated 06/19/14, expiring on 05/21/16.

Sifang Zhao, P.E.
Product Control Examiner
NOA No. 18-0221.08
Expiration Date: February 05, 2024
Approval Date: April 19, 2018

NOTICE OF ACCEPTANCE: EVIDENCE SUBMITTED

F. STATEMENTS

1. Statement letter of conformance, complying with **FBC 5th Edition (2014)**, and of no financial interest, dated June 2, 2015, issued by Al-Farooq Corporation, signed and sealed by Javad Ahmad, P.E.

G. OTHERS

1. Notice of Acceptance No. **13-1024.06**, issued to Eurotech Industries, Inc. for their Outswing Aluminum Casement Window – L.M.I., approved on 12/26/13 and expiring on 02/05/19.

2. NEW EVIDENCE SUBMITTED

A. DRAWINGS

1. Drawing **No. W03-80,** titled "Aluminum Casement Window (L.M.I.)", sheets 1 through 5 of 5, dated 09/05/03, with revision **H** dated 01/31/18, prepared by Al-Farooq Corporation, signed and sealed by Javad Ahmad, P.E.

B. TESTS

1. None

C. CALCULATIONS

1. Anchor verification calculations, complying with **FBC 6th Edition (2017)**, dated 01/30/2018, prepared by Al-Farooq Corporation, signed and sealed by Javad Ahmad, P.E.

D. QUALITY ASSURANCE

1. Miami-Dade Department of Regulatory and Economic Resources (RER)

E. MATERIAL CERTIFICATIONS

1. NOA No. **17-0808.02** issued to **Kuraray America, Inc.** for their **"SentryGlas® (Clear and White) Glass Interlayers**" dated 12/28/17, expiring on 07/04/23.
2. NOA No. **17-0712.05** issued to **Eastman Chemical Company (MA)** for their "**Saflex Clear and Color Glass Interlayers**" dated 09/07/17, expiring on 05/21/21.

F. STATEMENTS

1. Statement letter of conformance, complying with **FBC 6th Edition (2017),** and of no financial interest, dated January 30, 2018, issued by Al-Farooq Corporation, signed and sealed by Javad Ahmad, P.E.

G. OTHERS

1. NOA No. **15-0707.01**, issued to Eurotech Industries, Inc. for their Outswing Aluminum Casement Window - L.M.I., approved on 01/21/16 and expiring on 02/05/19.

Sifang Zhao, P.E.
Product Control Examiner
NOA No. 18-0221.08
Expiration Date: February 05, 2024
Approval Date: April 19, 2018

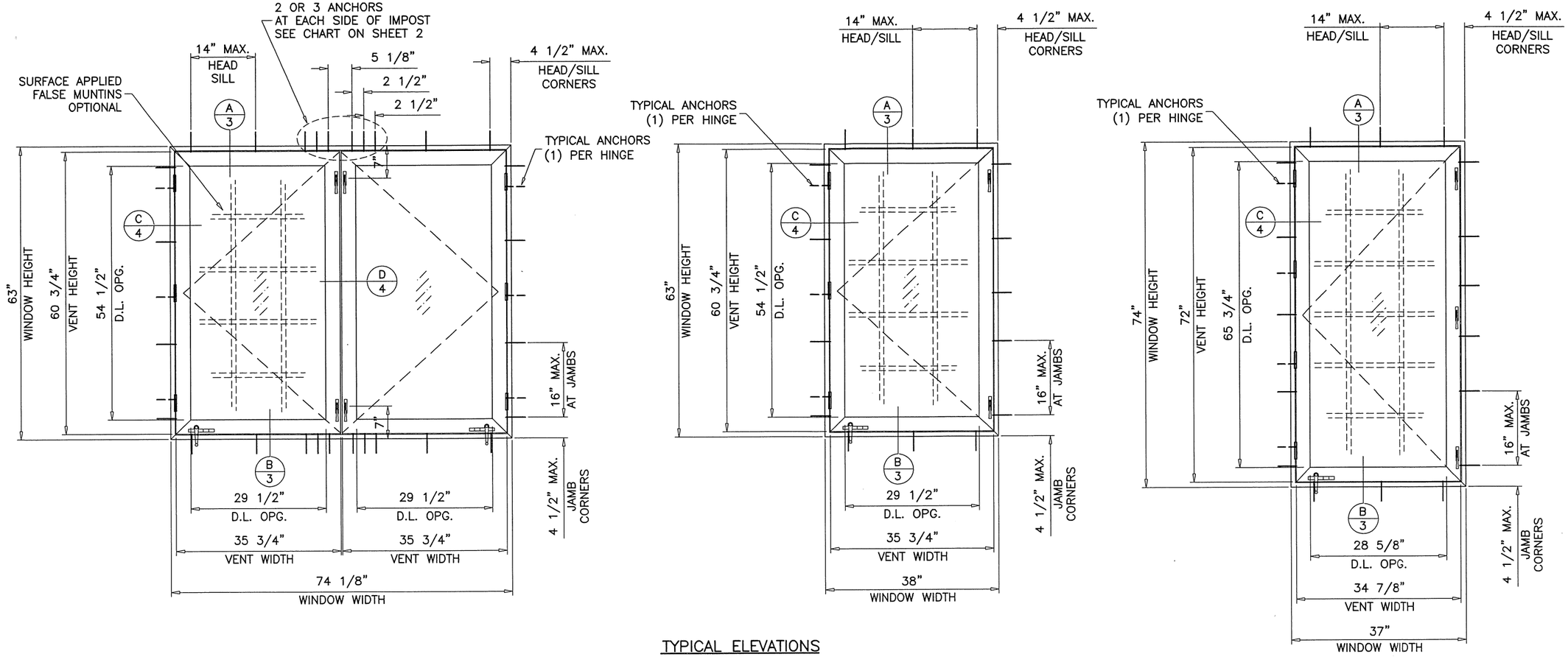

TYPICAL ELEVATIONS

ALUMINUM CASEMENT WINDOW (IMPACT)

DESIGN LOAD RATING FOR THESE WINDOWS TO BE AS PER CHARTS SHOWN ON SHEET 2.

APPROVAL APPLIES TO SINGLE VENT WINDOWS OR DUAL VENT WINDOWS USING INTEGRAL IMPOST.

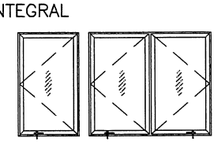

ALSO SIDE BY SIDE COMBINATIONS OF CASEMENT/CASEMENT OF TWO OR MORE WINDOWS USING APPROVED MULLIONS.

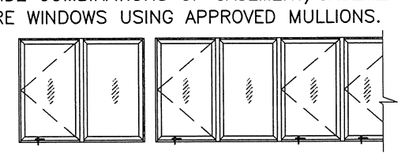

THIS PRODUCT HAS BEEN DESIGNED AND TESTED TO COMPLY WITH THE REQUIREMENTS OF THE 2017 (6TH EDITION) FLORIDA BUILDING CODE INCLUDING HIGH VELOCITY HURRICANE ZONE (HVHZ).

1BY OR 2BY WOOD BUCKS & BUCK FASTENERS BY OTHERS, MUST BE DESIGNED AND INSTALLED ADEQUATELY TO TRANSFER APPLIED PRODUCT LOADS TO THE BUILDING STRUCTURE.

ANCHORS SHALL BE CORROSION RESISTANT, SPACED AS SHOWN ON DETAILS AND INSTALLED PER MANUF'S INSTRUCTIONS. SPECIFIED EMBEDMENT TO BASE MATERIAL SHALL BE BEYOND WALL DRESSING OR STUCCO.

A LOAD DURATION INCREASE IS USED IN DESIGN OF ANCHORS INTO WOOD ONLY.

ALL SHIMS TO BE HIGH IMPACT, NON-METALLIC AND NON-COMPRESSIBLE.

MATERIALS INCLUDING BUT NOT LIMITED TO STEEL/METAL SCREWS, THAT COME INTO CONTACT WITH OTHER DISSIMILAR MATERIALS SHALL MEET THE REQUIREMENTS OF THE 2017 FLORIDA BLDG. CODE & ADOPTED STANDARDS.

THIS PRODUCT APPROVAL IS GENERIC AND DOES NOT PROVIDE INFORMATION FOR A SITE SPECIFIC PROJECT, i.e. LIFE SAFETY OF THIS PRODUCT, ADEQUACY OF STRUCTURE RECEIVING THIS PRODUCT AND SEALING AROUND OPENING FOR WATER INFILTRATION RESISTANCE ETC.
CONDITIONS NOT SHOWN IN THIS DRAWING ARE TO BE ANALYZED SEPARATELY, AND TO BE REVIEWED BY BUILDING OFFICIAL.

THESE WINDOWS ARE RATED FOR LARGE & SMALL MISSILE IMPACT. SHUTTERS ARE NOT REQUIRED.

PRODUCT REVISED
as complying with the Florida
Building Code
Acceptance No 18-0221.08
Expiration Date 02/05/2024
By
Miami Dade Product Control

FEB 12 2019

JAVAD AHMAD
LICENSE
No. 70592
STATE OF
FLORIDA
PROFESSIONAL ENGINEER

AL-FAROOQ CORPORATION
ENGINEERS & PRODUCT DEVELOPMENT
9360 SUNSET DRIVE, SUITE 220
MIAMI, FLORIDA 33173 (C.A.N. 3538)
TEL. (305) 264-8100 FAX. (305) 262-6978

COMP-ANL\W03-80EWD

ALUMINUM CASEMENT WINDOW (L.M.I.)

Eurotech Industries Inc.
4201 N.E. 12th Terrace
Oakland Park, Florida 33334
Tel. (954) 630-9967 Fax. (954) 630-0217

revisions:

no	date	by	description
E	12.16.13		NO CHANGE THIS SHEET
F	06.03.15		UPDATED TO 2014 FBC
G	12.03.15		REV. PER RER COMMENTS
H	01.31.18		UPDATED TO 2017 FBC

date: 09-05-03
scale: 1/2"=1'-0"
dr. by: TARIQ
chk. by:

drawing no.
W03-80

DESIGN LOAD CAPACITY – PSF FOR (X) SIZES					
WINDOW DIMS.		GLASS TYPE 'A'		GLASS TYPE 'B'	
WIDTH	HEIGHT	EXT.(+)	INT.(–)	EXT.(+)	INT.(–)
19–1/8"	26"	75.0	75.0	75.0	90.0
26–1/2"		75.0	75.0	75.0	90.0
37"		75.0	75.0	75.0	90.0
19–1/8"	38–3/8"	75.0	75.0	75.0	90.0
26–1/2"		75.0	75.0	75.0	90.0
37"		75.0	75.0	75.0	90.0
19–1/8"	50–5/8"	75.0	75.0	75.0	90.0
26–1/2"		75.0	75.0	75.0	90.0
37"		75.0	75.0	75.0	90.0
19–1/8"	63"	75.0	75.0	75.0	90.0
26–1/2"		75.0	75.0	75.0	90.0
37"		75.0	75.0	75.0	90.0
19–1/8"	74"	75.0	75.0	75.0	90.0
26–1/2"		75.0	75.0	75.0	90.0
37"		75.0	75.0	75.0	90.0
19–1/8"	78"	75.0	75.0	75.0	90.0
26–1/2"		75.0	75.0	75.0	90.0
19–1/8"	84"	75.0	75.0	75.0	90.0
26–1/2"		67.2	75.0	67.2	90.0
18"	24"	75.0	75.0	75.0	90.0
24"		75.0	75.0	75.0	90.0
30"		75.0	75.0	75.0	90.0
36"		75.0	75.0	75.0	90.0
18"	36"	75.0	75.0	75.0	90.0
24"		75.0	75.0	75.0	90.0
30"		75.0	75.0	75.0	90.0
36"		75.0	75.0	75.0	90.0
18"	48"	75.0	75.0	75.0	90.0
24"		75.0	75.0	75.0	90.0
30"		75.0	75.0	75.0	90.0
36"		75.0	75.0	75.0	90.0
18"	60"	75.0	75.0	75.0	90.0
24"		75.0	75.0	75.0	90.0
30"		75.0	75.0	75.0	90.0
36"		75.0	75.0	75.0	90.0
18"	72"	75.0	75.0	75.0	90.0
24"		75.0	75.0	75.0	90.0
30"		75.0	75.0	75.0	90.0
36"		75.0	75.0	75.0	90.0
18"	80"	75.0	75.0	75.0	90.0
24"		75.0	75.0	75.0	90.0
30"		69.9	75.0	69.9	90.0

DESIGN LOAD CAPACITY – PSF FOR (XX) SIZES					
WINDOW DIMS.		GLASS TYPE 'A' & 'B'			
		2 ANCHOR AT EACH SIDE OF IMPOST		3 ANCHORS AT EACH SIDE OF IMPOST	
WIDTH	HEIGHT	EXT.(+)	INT.(–)	EXT.(+)	INT.(–)
26–1/2"	26"	75.0	75.0	–	–
37"		75.0	75.0	–	–
53–1/8"		75.0	75.0	–	–
74"		75.0	75.0	–	–
26–1/2"	38–3/8"	75.0	75.0	–	–
37"		75.0	75.0	–	–
53–1/8"		75.0	75.0	–	–
74"		75.0	75.0	–	–
26–1/2"	50–5/8"	75.0	75.0	–	–
37"		75.0	75.0	–	–
53–1/8"		75.0	75.0	–	–
74"		75.0	75.0	–	–
26–1/2"	63"	75.0	75.0	–	–
37"		75.0	75.0	–	–
53–1/8"		75.0	75.0	–	–
74"		70.5	70.5	75.0	75.0
24"	24"	75.0	75.0	–	–
36"		75.0	75.0	–	–
48"		75.0	75.0	–	–
60"		75.0	75.0	–	–
72"		75.0	75.0	–	–
24"	36"	75.0	75.0	–	–
36"		75.0	75.0	–	–
48"		75.0	75.0	–	–
60"		75.0	75.0	–	–
72"		75.0	75.0	–	–
24"	48"	75.0	75.0	–	–
36"		75.0	75.0	–	–
48"		75.0	75.0	–	–
60"		75.0	75.0	–	–
72"		75.0	75.0	–	–
24"	60"	75.0	75.0	–	–
36"		75.0	75.0	–	–
48"		75.0	75.0	–	–
60"		75.0	75.0	–	–
72"		75.0	75.0	–	–

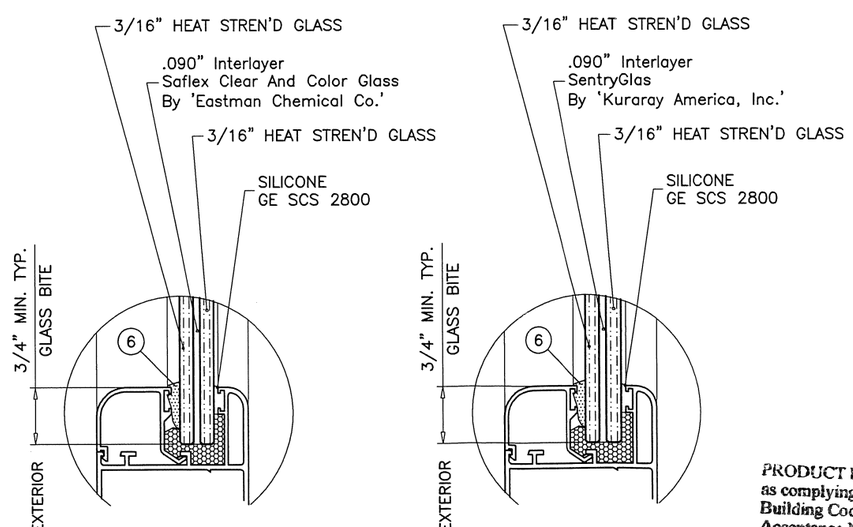

GLASS TYPE 'A' GLASS TYPE 'B'

GLAZING OPTIONS

NOTE:
GLASS CAPACITIES ON THIS SHEET ARE BASED ON ASTM E1300–09 (3 SEC. GUSTS) AND FLORIDA BUILDING COMMISSION DECLARATORY STATEMENT DCA05–DEC–219

PRODUCT REVISED
as complying with the Florida Building Code
Acceptance No 18-0221.08
Expiration Date 02/05/2024
By
Miami Dade Product Control

FEB 12 2018

JAVAD AHMAD
LICENSE
No. 70592
STATE OF FLORIDA
PROFESSIONAL ENGINEER

AL-FAROOQ CORPORATION
ENGINEERS & PROJECT DEVELOPMENT
9360 SUNSET DRIVE, SUITE 220
MIAMI, FLORIDA 33173 (C.A.N. 3538)
TEL. (305) 264-8100 FAX. (305) 262-6978

COMP–ANL\W03–80EWD

ALUMINUM CASEMENT WINDOW (L.M.I.)

Eurotech Industries Inc.
4201 N.E. 12th Terrace
Oakland Park, Florida 33334
Tel. (954) 630–9967 Fax. (954) 630–0217

revisions:

no	date	by	description
E	12.16.13		INTERLAYERS NAME REV.
F	06.03.15		UPDATED TO 2014 FBC
G	12.03.15		REV. PER RER COMMENTS
H	01.31.18		UPDATED TO 2017 FBC

date: 09–05–03
scale: 1/2" = 1"
dr. by: TARIQ
chk. by:

drawing no.
W03–80

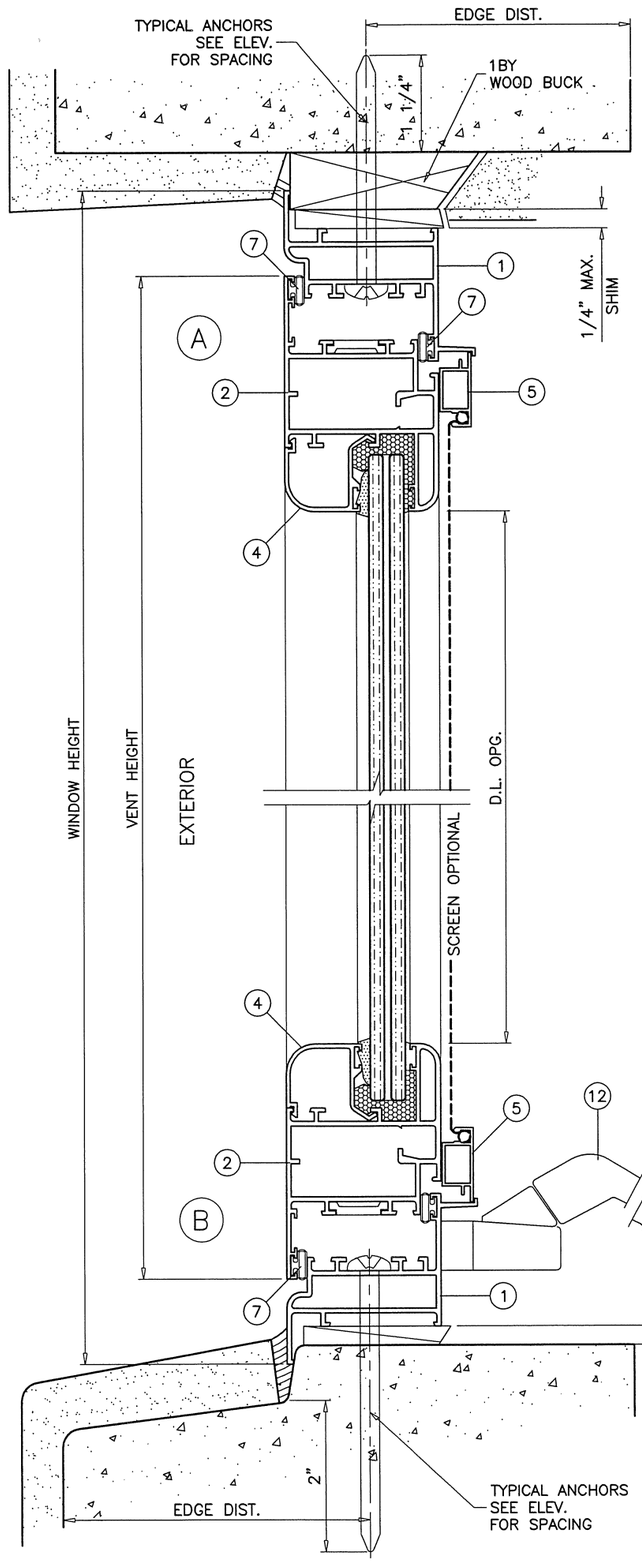

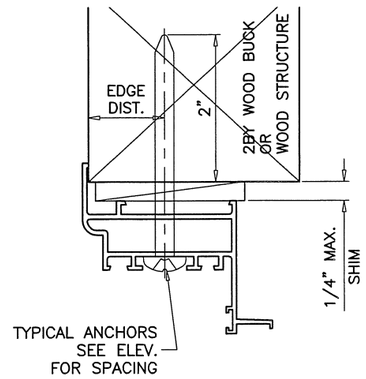

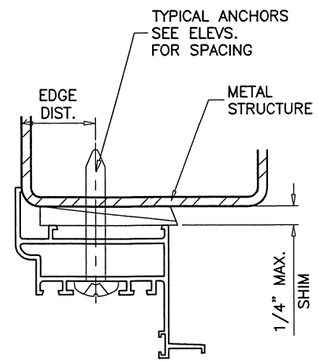

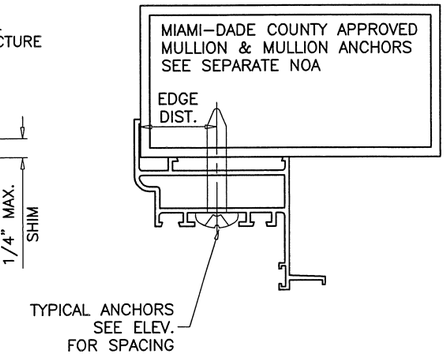

WOOD BUCKS AND METAL STRUCTURE NOT BY EUROTECH MUST SUSTAIN LOADS IMPOSED BY GLAZING SYSTEM AND TRANSFER THEM TO THE BUILDING STRUCTURE.

SEALANTS:

ALL FRAME AND VENT CORNERS AND INSTALLATION SCREWS SEALED WITH CLEAR/ALUMINUM COLORED SILICONE.

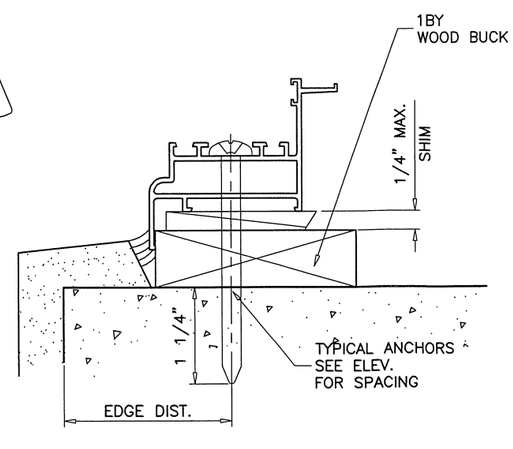

TYPICAL ANCHORS: SEE ELEV. FOR SPACING

1/4" DIA. ULTRACON BY 'ELCO' (Fu=177 KSI, Fy=155 KSI)

INTO WOOD STRUCTURES
2" MIN. PENETRATION INTO WOOD (HEAD/SILL/JAMBS)

THRU 1BY BUCKS INTO CONC. OR BLOCKS
1-1/4" MIN. EMBED INTO CONCRETE (HEAD/SILL/JAMBS)
1-1/4" MIN. EMBED INTO BLOCKS (JAMBS)

DIRECTLY INTO CONCRETE OR BLOCKS
2" MIN. EMBED INTO CONCRETE (HEAD/SILL)
1-1/4" MIN. EMBED INTO CONC. OR BLOCKS (JAMBS)

1/4" DIA. TEKS OR SELF-DRILLING SCREWS (GRADE 5 CRS)

INTO METAL STRUCTURES (HEAD/SILL/JAMBS)
(3) THREADS MIN. TO EXTEND BEYOND METAL THICKNESS
ALUMINUM: 1/8" THK. MIN. (6063-T5 MIN.)
STEEL: 1/8" THK. MIN. (Fy = 36 KSI MIN.)
(STEEL IN CONTACT WITH ALUMINUM TO BE PLATED OR PAINTED)

#12 SMS OR SELF-DRILLING SCREWS (GRADE 2 CRS)

INTO MIAMI-DADE COUNTY APPROVED MULLIONS (NO SHIMS)
(3) THREADS MIN. TO EXTEND BEYOND METAL THICKNESS
ALUMINUM: 1/8" THK. MIN. (6063-T5 MIN.) (NO SHIMS)
STEEL: 1/8" THK. MIN. (Fy = 36 KSI MIN.) (NO SHIMS)
(STEEL IN CONTACT WITH ALUMINUM TO BE PLATED OR PAINTED)

CRITICAL EDGE DISTANCE

INTO CONCRETE AND BLOCKS = 1" MIN.
INTO WOOD STRUCTURE = 1" MIN.
INTO METAL STRUCTURE = 3/4" MIN.

WOOD AT HEAD, SILL OR JAMBS SG = 0.55 MIN.
CONCRETE AT HEAD, SILL OR JAMBS f'c = 3000 PSI MIN.
C-90 HOLLOW/FILLED BLOCK AT JAMBS f'm = 2000 PSI MIN.

PRODUCT REVISED
as complying with the Florida
Building Code
Acceptance No 18-0221.08
Expiration Date 02/05/2024
By
Miami Dade Product Control

FEB 12 2018

JAVAD AHMAD
LICENSE
No. 70592
STATE OF FLORIDA
PROFESSIONAL ENGINEER

AL-FAROOQ CORPORATION
ENGINEERS & PRODUCT DEVELOPMENT
9360 SUNSET DRIVE, SUITE 220
MIAMI, FLORIDA 33173 (C.A.N. 3538)
TEL. (305) 264-8100 FAX. (305) 262-6978

COMP-ANL\W03-80EWD

ALUMINUM CASEMENT WINDOW (L.M.I.)

Eurotech Industries Inc.
4201 N.E. 12th Terrace
Oakland Park, Florida 33334
Tel. (954) 630-9967 Fax. (954) 630-0217

revisions:

no	date	by	description
E	12.16.13		NO CHANGE THIS SHEET
F	06.03.15		UPDATED TO 2014 FBC
G	12.03.15		REV. PER RER COMMENTS
H	01.31.18		UPDATED TO 2017 FBC

date: 09-05-03
scale: 1/2" = 1"
dr. by: TARIQ
chk. by:

drawing no.
W03-80

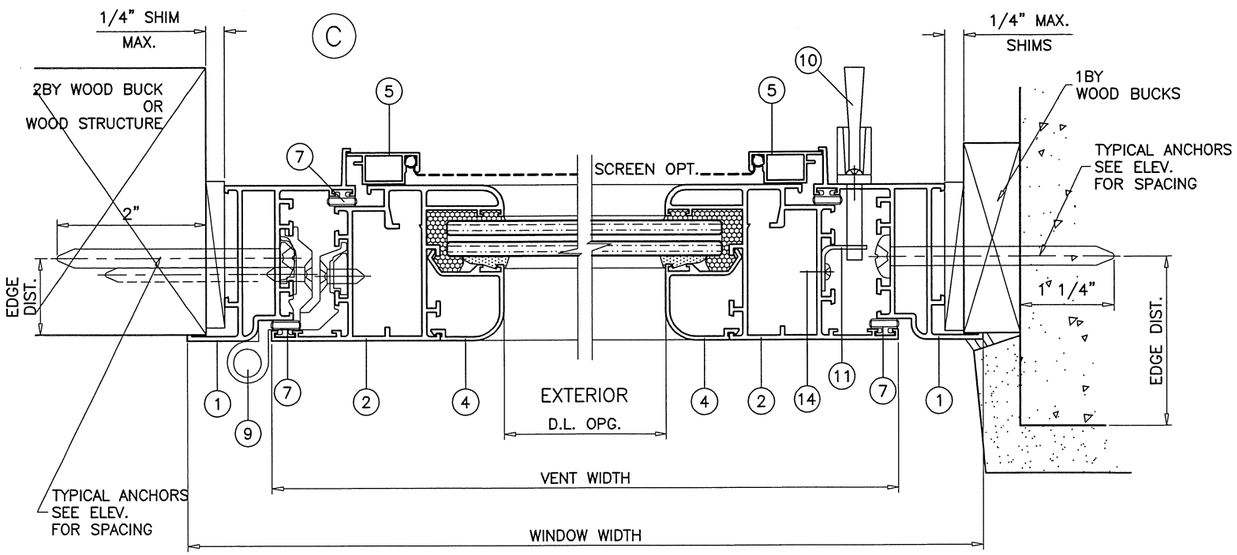

SINGLE VENT WINDOWS

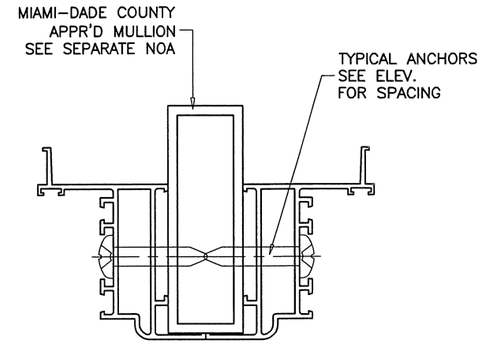

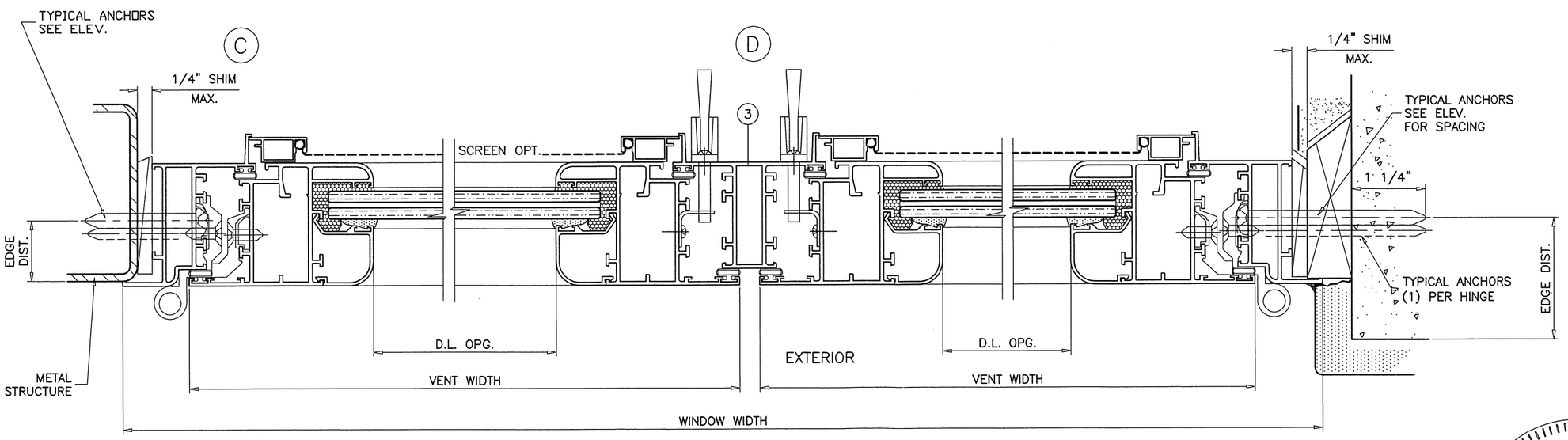

DUAL VENT WINDOWS

PRODUCT REVISED
as complying with the Florida
Building Code
Acceptance No 18-0221.08
Expiration Date 02/05/2024
By
Miami Dade Product Control

FEB 12 2019

JAVAD AHMAD
LICENSE
No. 70592
STATE OF
FLORIDA
PROFESSIONAL ENGINEER

AL-FAROOQ CORPORATION
ENGINEERS & PRODUCT DEVELOPMENT
9360 SUNSET DRIVE, SUITE 220
MIAMI, FLORIDA 33173 (C.A.N. 3538)
TEL. (305) 264-8100 FAX. (305) 262-6978

COMP-ANL\W03-80EWD

ALUMINUM CASEMENT WINDOW (L.M.I.)

Eurotech Industries Inc.
4201 N.E. 12th Terrace
Oakland Park, Florida 33334
Tel. (954) 630-9967 Fax. (954) 630-0217

revisions:

no	date	by	description
E	12.16.13		NO CHANGE THIS SHEET
F	06.03.15		UPDATED TO 2014 FBC
G	12.03.15		REV. PER RER COMMENTS
H	01.31.18		UPDATED TO 2017 FBC

date: 09-05-03
scale: 1/2" = 1"
dr. by: TARIQ
chk. by:

drawing no.
W03-80

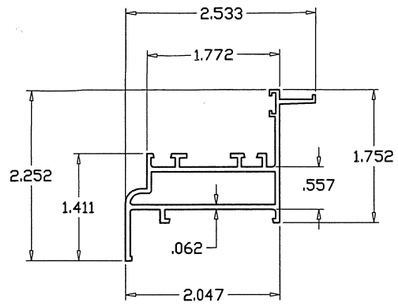

1 FRAME

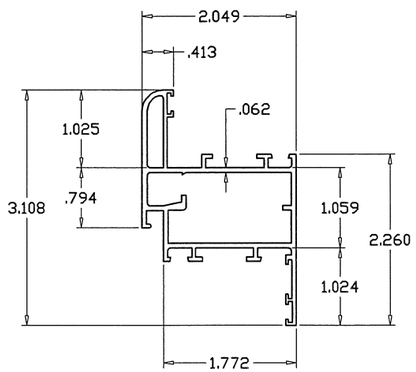

2 VENT

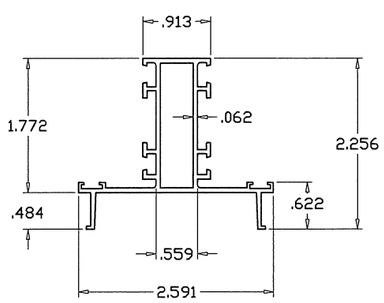

3 IMPOST

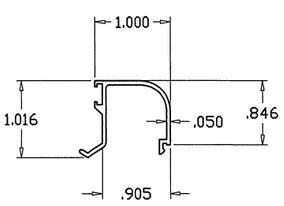

4 GLAZING BEAD

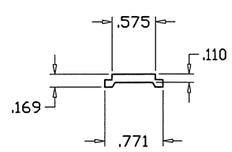

–

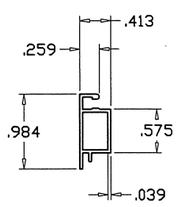

5 WINDOW SCREEN

ITEM	PART #	QUANTITY	DESCRIPTION	MATERIAL	MANF./SUPPLIER/REMARKS
1	ER001	4	WINDOW FRAME	6063–T6	–
2	ER008	4	VENT	6063–T6	–
3	ER003	1	CENTER POST	6063–T6	–
4	ER002	AS REQD.	GLAZING BEAD	6063–T6	–
5	ER004	OPTIONAL	WINDOW SCREEN	6063–T6	–
6	2801	AS REQD.	WEDGE GASKET	–	–
7	–	AS REQD.	FRAME WEATHERSTRIPPING	VINYL	–
9	0150X	3/ VENT	HINGES	–	GIESSE, ATTACHED W/ (3) #12 X 7/16" MS
10	24.25.32.300	2/ VENT	LEVER TYPE FACE MOUNT LOCK, 7" FROM TOP & BOTTOM	STEEL	TRUTH, ATTACHED W/ (2) #8 X 3/8" PH SMS
11	–	2/ VENT	LOCK KEEPERS, AT VENT STILE FACING LOCK	STEEL	ATTACHED W/ (2) #8 X 3/4" PH SDS
12	10579.32	1	ROTO OPERATOR	STEEL	TRUTH, ATTACHED W/ (2) #10 X 1/2" SS SMS
13	1103	1/ CORNER	CLIP–ON CORNER JOINT	ALUMINUM	GIESSE
14	–	2/ LOCK	LOCK INSTALLATION SCREWS	–	#8 X 3/8" PH SMS
15	485	AS REQD.	T–POST CONNECTOR	–	GIESSE

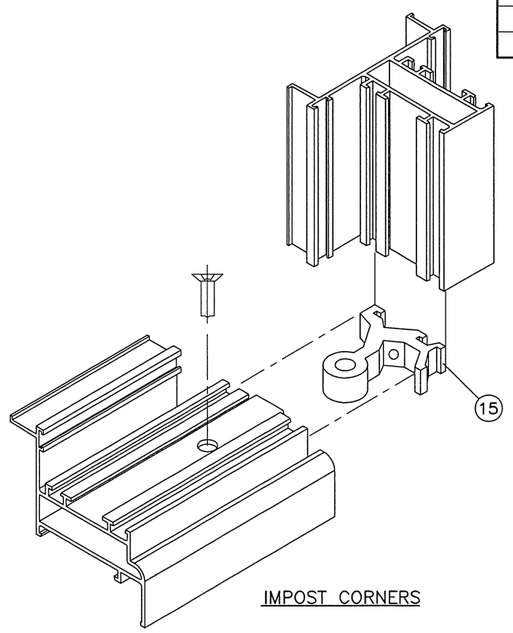

IMPOST CORNERS

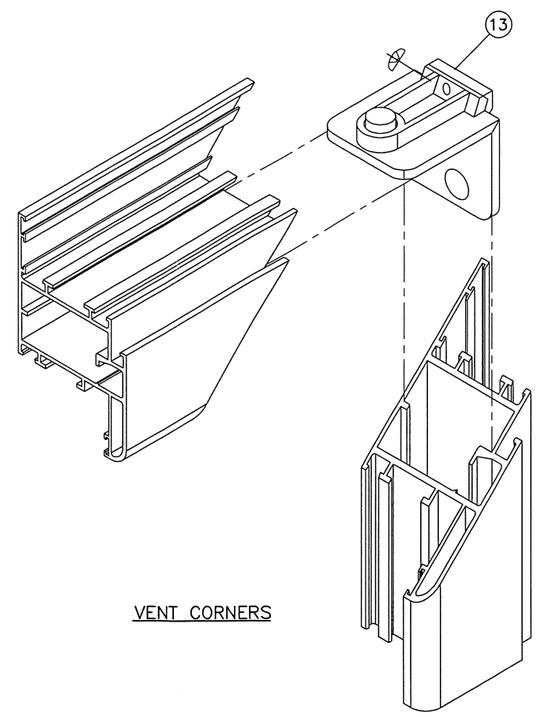

VENT CORNERS

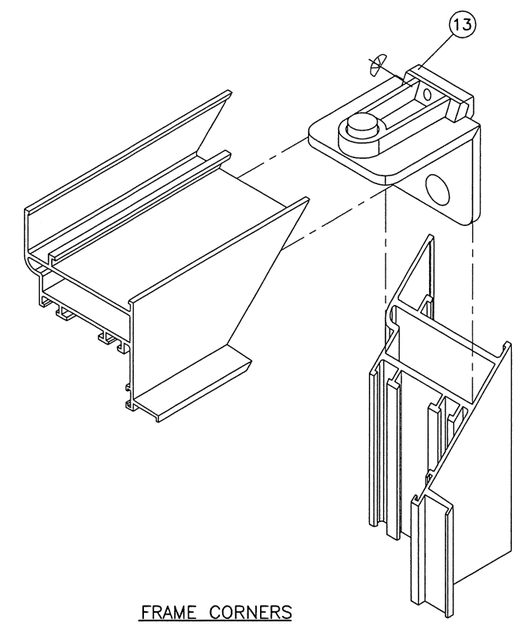

FRAME CORNERS

PRODUCT REVISED
as complying with the Florida
Building Code
Acceptance No 18-0221.08
Expiration Date 02/05/2024
By
Miami Dade Product Control

FEB 12 2018

JAVAD AHMAD
LICENSE
No. 70592
STATE OF FLORIDA
PROFESSIONAL ENGINEER

AL-FAROOQ CORPORATION
ENGINEERS & PRODUCT DEVELOPMENT
9360 SUNSET DRIVE, SUITE 220
MIAMI, FLORIDA 33173 (C.A.N. 3538)
TEL. (305) 264-8100 FAX. (305) 262-6978

COMP–ANL\W03–80EWD

ALUMINUM CASEMENT WINDOW (L.M.I.)

Eurotech Industries Inc.
4201 N.E. 12th Terrace
Oakland Park, Florida 33334
Tel. (954) 630–9967 Fax. (954) 630–0217

revisions:

no	date	by	description
E	12.16.13		NO CHANGE THIS SHEET
F	06.03.15		NO CHANGE THIS SHEET
G	12.03.15		NO CHANGE THIS SHEET
H	01.31.18		UPDATED TO 2017 FBC

date: 09–05–03
scale: 1/2" = 1"
dr. by: TARIQ
chk. by:

drawing no.
W03–80

sheet 5 of 5