MIAMI-DADE COUNTY
DEPARTMENT OF REGULATORY AND ECONOMIC RESOURCES (RER)
BOARD AND CODE ADMINISTRATION DIVISION

MIAMI-DADE COUNTY
PRODUCT CONTROL SECTION
11805 SW 26 Street, Room 208
T (786) 315-2590 F (786) 315-2599
www.miamidade.gov/economy

NOTICE OF ACCEPTANCE (NOA)

Sunshine Windows Manufacturing, Inc.
1745 W 33rd Place
Hialeah, FL 33012

SCOPE:

This NOA is being issued under the applicable rules and regulations governing the use of construction materials. The documentation submitted has been reviewed and accepted by Miami-Dade County RER-Product Control Section to be used in Miami Dade County and other areas where allowed by the Authority Having Jurisdiction (AHJ).

This NOA shall not be valid after the expiration date stated below. The Miami-Dade County Product Control Section (In Miami Dade County) and/ or the AHJ (in areas other than Miami Dade County) reserve the right to have this product or material tested for quality assurance purposes. If this product or material fails to perform in the accepted manner, the manufacturer will incur the expense of such testing and the AHJ may immediately revoke, modify, or suspend the use of such product or material within their jurisdiction. RER reserves the right to revoke this acceptance, if it is determined by Miami-Dade County Product Control Section that this product or material fails to meet the requirements of the applicable building code.

This product is approved as described herein, and has been designed to comply with the Florida Building Code, including the High Velocity Hurricane Zone.

DESCRIPTION: Series "8000" Aluminum Window Wall System – L.M.I.

APPROVAL DOCUMENT: Drawing No. **W08-90**, titled "Series 8000 Alum. Window Wall System (L.M.I.)", sheets 1, 1.1, 2, 3, 4, 5, 5.1, 5.2, 6, 6.1 and 7 through 12 of 12, dated 11/11/08, with revision **D** dated 06/13/18, prepared by Al-Farooq Corporation, signed and sealed by Javad Ahmad, P.E., bearing the Miami-Dade County Product Control Revision stamp with the Notice of Acceptance number and expiration date by the Miami-Dade County Product Control Section.

MISSILE IMPACT RATING: Large and Small Missile Impact Resistant

LABELING: Each unit shall bear a permanent label with the manufacturer's name or logo, city, state, series, and following statement: "Miami–Dade County Product Control Approved", unless otherwise noted herein.

RENEWAL of this NOA shall be considered after a renewal application has been filed and there has been no change in the applicable building code negatively affecting the performance of this product.

TERMINATION of this NOA will occur after the expiration date or if there has been a revision or change in the materials, use, and/ or manufacture of the product or process. Misuse of this NOA as an endorsement of any product, for sales, advertising or any other purposes shall automatically terminate this NOA. Failure to comply with any section of this NOA shall be cause for termination and removal of NOA.

ADVERTISEMENT: The NOA number preceded by the words Miami-Dade County, Florida, and followed by the expiration date may be displayed in advertising literature. If any portion of the NOA is displayed, then it shall be done in its entirety.

INSPECTION: A copy of this entire NOA shall be provided to the user by the manufacturer or its distributors and shall be available for inspection at the job site at the request of the Building Official.

This NOA **revises and renews NOA No. 16-0201.19** and consists of this page 1 and evidence pages E-1, E-2, E-3 and E-4, as well as approval document mentioned above.

The submitted documentation was reviewed by **Manuel Perez, P.E.**

MIAMI-DADE COUNTY APPROVED

8/22/18

NOTICE OF ACCEPTANCE: EVIDENCE SUBMITTED

1. EVIDENCE SUBMITTED UNDER PREVIOUS NOA's

A. DRAWINGS

1. Manufacturer's die drawings and sections.
   (Submitted under NOA No. 08-1114.16)
2. Drawing No. **W08-90**, titled "Series 8000 Alum. Window Wall System (L.M.I.)", sheets 1 through 5, 5.1, 6 through 12 of 12, dated 11/11/08, with revision **B** dated 01/18/16, prepared by Al-Farooq Corporation, signed and sealed by Javad Ahmad, P.E.

B. TESTS

1. Test reports on: 1) Air Infiltration Test, per FBC, TAS 202-94
   2) Uniform Static Air Pressure Test, Loading per FBC, TAS 202--94
   3) Water Resistance Test, per FBC, TAS 202-94
   4) Large Missile Impact Test per FBC, TAS 201--94
   5) Cyclic Wind Pressure Loading per FBC, TAS 203--94
   6) Drop Load Test, per CPSC 16 CFR 1201 (400 foot-pound impact)

   along with marked-up drawings and installation diagram of an aluminum window wall system, prepared by Fenestration Testing Laboratory, Inc., Test Report No. **FTL-5447**, dated 12/19/07, signed and sealed by Michael R. Wenzel, P.E.
   (Submitted under NOA No. 08-1114.16)

C. CALCULATIONS

1. Anchor verification calculations and structural analysis, complying with **FBC 5th Edition (2014)**, dated 07/27/15, prepared by Al-Farooq Corporation, signed and sealed by Javad Ahmad, P.E.
2. Glazing complies with **ASTM E1300-09**

D. QUALITY ASSURANCE

1. Miami-Dade Department of Regulatory and Economic Resources (RER)

E. MATERIAL CERTIFICATIONS

1. Notice of Acceptance No. **14-0916.11** issued to **Kuraray America, Inc.** for their **"SentryGlas® (Clear and White) Glass Interlayers"** dated 06/25/15, expiring on 07/04/18.
2. Notice of Acceptance No. **14-0916.10** issued to **Kuraray America, Inc.** for their **"Butacite® PVB Glass Interlayer"** dated 04/25/15, expiring on 12/11/16.

Manuel Perez, P.E.
Product Control Examiner
NOA No. 18-0319.10
Expiration Date: April 03, 2023
Approval Date: August 30, 2018

NOTICE OF ACCEPTANCE: EVIDENCE SUBMITTED

F. STATEMENTS

1. Statement letter of conformance, complying with **FBC 5th Edition (2014)**, and of no financial interest, dated January 18, 2016, prepared by Al-Farooq Corporation, signed and sealed by Javad Ahmad, P.E.
2. Laboratory compliance letter for Test Report No. **FTL-5447**, issued by Fenestration Testing Laboratory, Inc., dated 12/19/07, signed and sealed by Michael R. Wenzel, P.E.
   (Submitted under NOA No.08-1114.16)
3. Private Labeling Agreement document in conformance to Product Control guidelines dated 04/09/09 signed by Jose Nuñez.
   (Submitted under NOA No.09-0413.10)

G. OTHERS

1. Notice of Acceptance No. **13-0122.05**, issued to Sunshine Windows Manufacturing, Inc. for their Series "8000" Aluminum Window Wall System – L.M.I., approved on 08/06/15 and expiring on 04/03/18.

Manuel Perez, P.E.
Product Control Examiner
NOA No. 18-0319.10
Expiration Date: April 03, 2023
Approval Date: August 30, 2018

NOTICE OF ACCEPTANCE: EVIDENCE SUBMITTED

2. NEW EVIDENCE SUBMITTED

A. DRAWINGS

1. Drawing No. **W08-90**, titled "Series 8000 Alum. Window Wall System (L.M.I.)", sheets 1, 1.1, 2, 3, 4, 5, 5.1, 5.2, 6, 6.1 and 7 through 12 of 12, dated 11/11/08, with revision **D** dated 06/13/18, prepared by Al-Farooq Corporation, signed and sealed by Javad Ahmad, P.E.

B. TESTS

1. Test reports on: 1) Air Infiltration Test, per FBC, TAS 202-94
2) Uniform Static Air Pressure Test, Loading per FBC, TAS 202-94
3) Water Resistance Test, per FBC, TAS 202-94
4) Large Missile Impact Test per FBC, TAS 201-94
5) Cyclic Wind Pressure Loading per FBC, TAS 203-94
6) Drop Load Test, per ANSI Z97.1 (400 foot-pound impact)
along with marked-up drawings and installation diagram of an aluminum window wall system, prepared by Fenestration Testing Laboratory, Inc., Test Report No. **FTL-9605**, dated 08/16/17, signed and sealed by Idalmis Ortega, P.E.

2. Test reports on: 1) Air Infiltration Test, per FBC, TAS 202-94
2) Uniform Static Air Pressure Test, Loading per FBC, TAS 202-94
3) Water Resistance Test, per FBC, TAS 202-94
4) Large Missile Impact Test per FBC, TAS 201-94
5) Cyclic Wind Pressure Loading per FBC, TAS 203--94
along with marked-up drawings and installation diagram of an aluminum window wall system, prepared by Fenestration Testing Laboratory, Inc., Test Report No. **FTL-8372**, dated 03/24/16, signed and sealed by Idalmis Ortega, P.E.

C. CALCULATIONS

1. Anchor verification calculations and structural analysis, complying with **FBC 6th Edition (2017)**, dated 08/30/17, prepared by Al-Farooq Corporation, signed and sealed by Javad Ahmad, P.E.

D. QUALITY ASSURANCE

1. Miami-Dade Department of Regulatory and Economic Resources (RER)

Manuel Perez, P.E.
Product Control Examiner
NOA No. 18-0319.10
Expiration Date: April 03, 2023
Approval Date: August 30, 2018

NOTICE OF ACCEPTANCE: EVIDENCE SUBMITTED

E. MATERIAL CERTIFICATIONS

1. Notice of Acceptance No. **17-0808.02** issued to **Kuraray America, Inc.** for their **"SentryGlas® (Clear and White) Glass Interlayers"** dated 12/28/17, expiring on 07/04/23.
2. Notice of Acceptance No. **17-1114.14** issued to **Kuraray America, Inc.** for their **"Trosifol® Ultraclear, Clear and Color PVB Glass Interlayers"** dated 01/18/18, expiring on 07/08/19.

F. STATEMENTS

1. Statement letter of conformance, complying with **FBC 6th Edition (2017),** and of no financial interest, dated March 12, 2018, issued by Al-Farooq Corporation, signed and sealed by Javad Ahmad, P.E.

G. OTHERS

1. Notice of Acceptance No. **16-0201.19**, issued to Sunshine Windows Manufacturing, Inc. for their Series "8000" Aluminum Window Wall System – L.M.I., approved on 07/21/16 and expiring on 04/03/18.

Manuel Perez

Manuel Perez, P.E.
Product Control Examiner
NOA No. 18-0319.10
Expiration Date: April 03, 2023
Approval Date: August 30, 2018

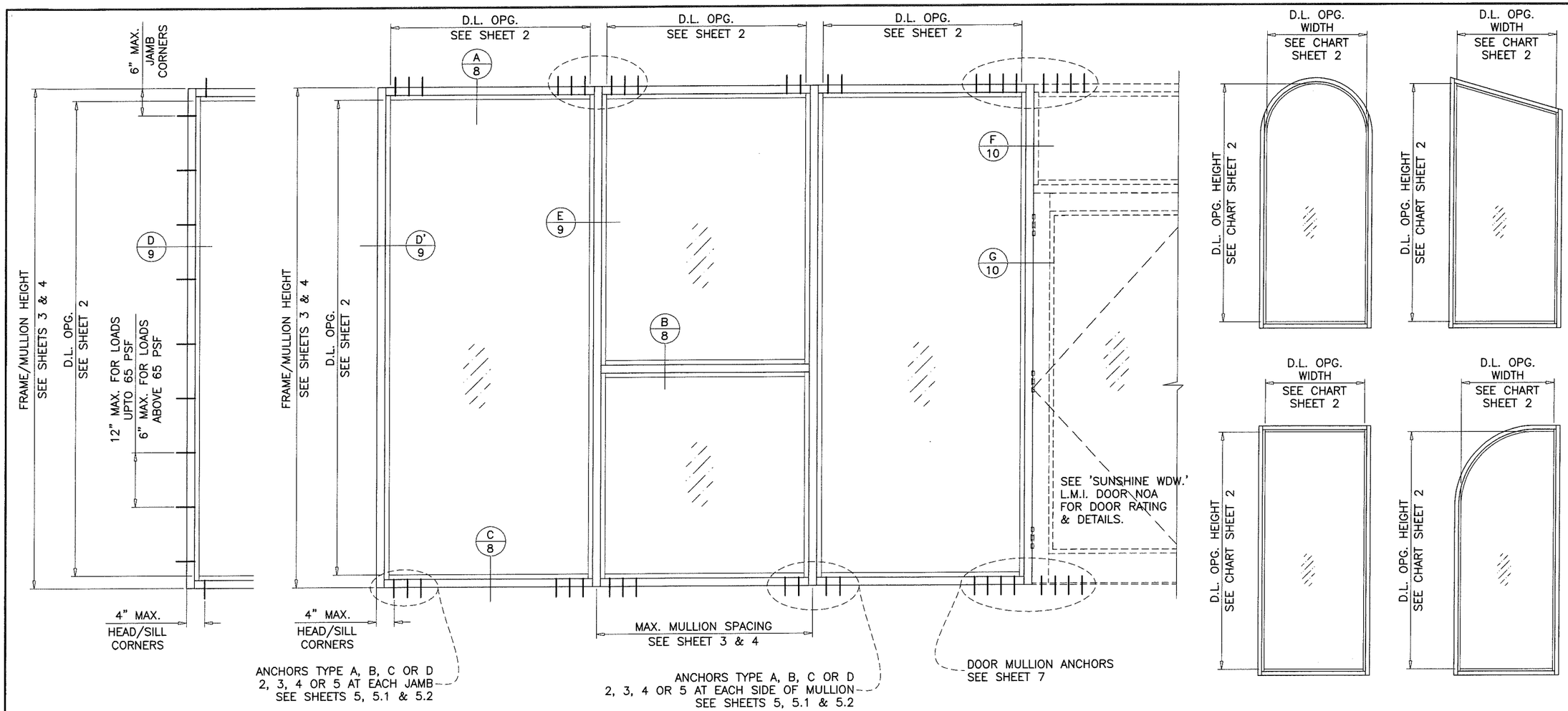

TYPICAL ELEVATION

SERIES 8000 ALUMINUM WINDOW WALL SYSTEM

THIS SYSTEM IS RATED FOR LARGE MISSILE IMPACT
SHUTTERS ARE NOT REQUIRED.

THIS PRODUCT HAS BEEN DESIGNED AND TESTED TO COMPLY WITH THE REQUIREMENTS OF THE 2017 (6TH EDITION) FLORIDA BUILDING CODE INCLUDING HIGH VELOCITY HURRICANE ZONE (HVHZ).

1BY OR 2BY WOOD BUCKS & BUCK FASTENERS BY OTHERS, MUST BE DESIGNED AND INSTALLED ADEQUATELY TO TRANSFER APPLIED PRODUCT LOADS TO THE BUILDING STRUCTURE.

ANCHORS SHALL BE CORROSION RESISTANT, SPACED AS SHOWN ON DETAILS AND INSTALLED PER MANUF'S INSTRUCTIONS. SPECIFIED EMBEDMENT TO BASE MATERIAL SHALL BE BEYOND WALL DRESSING OR STUCCO.

A LOAD DURATION INCREASE IS USED IN DESIGN OF ANCHORS INTO WOOD ONLY.

ALL SHIMS TO BE HIGH IMPACT, NON-METALLIC AND NON-COMPRESSIBLE.

MATERIALS INCLUDING BUT NOT LIMITED TO STEEL/METAL SCREWS, THAT COME INTO CONTACT WITH OTHER DISSIMILAR MATERIALS SHALL MEET THE REQUIREMENTS OF THE 2017 FLORIDA BLDG. CODE & ADOPTED STANDARDS.

THIS PRODUCT APPROVAL IS GENERIC AND DOES NOT PROVIDE INFORMATION FOR A SITE SPECIFIC PROJECT, i.e. LIFE SAFETY OF THIS PRODUCT, ADEQUACY OF STRUCTURE RECEIVING THIS PRODUCT AND SEALING AROUND OPENING FOR WATER INFILTRATION RESISTANCE ETC.
CONDITIONS NOT SHOWN IN THIS DRAWING ARE TO BE ANALYZED SEPARATELY, AND TO BE REVIEWED BY BUILDING OFFICIAL.

INSTRUCTIONS:

USE CHARTS AS FOLLOWS.

STEP 1 DETERMINE DESIGN WIND LOAD REQUIREMENT BASED ON WIND VELOCITY, BLDG. HEIGHT, WIND ZONE USING APPLICABLE ASCE 7 STANDARD.

STEP 2 SEE CHARTS ON SHEET 2 FOR DESIGN LOAD CAPACITY OF DESIRED GLASS SIZE.

STEP 3 CHECK MULLION CAPACITY FOR A GIVEN SPACING AND HEIGHT USING CHARTS ON SHEETS 3 & 4 FOR WINDOW WALL MULLION AND SHEETS 6 & 7 FOR DOOR MULLION
THE CAPACITY SHOULD EXCEED THE DESIGN LOAD.

STEP 4 CHECK ANCHOR CAPACITY FOR WINDOW WALL SYSTEM USING CHARTS ON SHEETS 5, 5.1 & 5.2
FOR DOOR MULLION ANCHOR CAPACITY SEE CHART ON SHEET 7.
THE CAPACITY SHOULD EXCEED THE DESIGN LOAD.

STEP 5 THE LOWEST VALUE RESULTING FROM STEPS 2, 3 AND 4 SHALL APPLY TO ENTIRE SYSTEM.

ALLOWABLE LOADS FOR ALTERNATE SHAPES AS SHOWN ABOVE OR SIMILAR CAN BE VERIFIED BY INSCRIBING PICTURE WINDOW SHAPE WITHIN SQUARE OR RECTANGLE AS SHOWN IN DOTTED LINES AND OBTAINING ALLOWABLE LOADS FROM THOSE SHAPES. SINGLE LITES MAY BE INSTALLED VERTICALLY AS SHOWN ABOVE OR HORIZONTALLY.

PRODUCT COMPLIES WITH REQUIREMENTS OF ANSI Z97.1.

LAMINATED GLASS
LARGE MISSILE IMPACT

PRODUCT REVISED
as complying with the Florida
Building Code
Acceptance No 18-0319.10
Expiration Date April 3, 2023
By Manuel Perez
Miami Dade Product Control

JAVAD AHMAD
LICENSE
No. 70592
Jul 1,2018
STATE OF FLORIDA
PROFESSIONAL ENGINEER

AL-FAROOQ CORPORATION
ENGINEERS & PRODUCT DEVELOPMENT
9360 SUNSET DRIVE, SUITE 220
MIAMI, FLORIDA 33173 (C.A.N. 3538)
TEL. (305) 264-8100 FAX. (305) 262-6978

STORE\W08-90SW

SERIES 8000 ALUM WINDOW WALL SYSTEM (L.M.I.)

SUNSHINE WINDOWS MANUFACTURING INC.
1785 WEST 33RD PLACE
HIALEAH, FL. 33012
TEL. (305) 364-9952 FAX. (305) 828-5118

revisions:

no	date	by	description
A	03.05.12		UPDATED TO 2010 FBC
B	01.18.16		UPDATED TO 2014 FBC
C	03.12.18		UPDATED TO 2017 FBC
D	06.13.18		NO CHANGE THIS SHEET

date: 11-11-08
scale: 1/2"=1'-0"
dr. by: TARIQ
chk. by:

drawing no.
W08-90

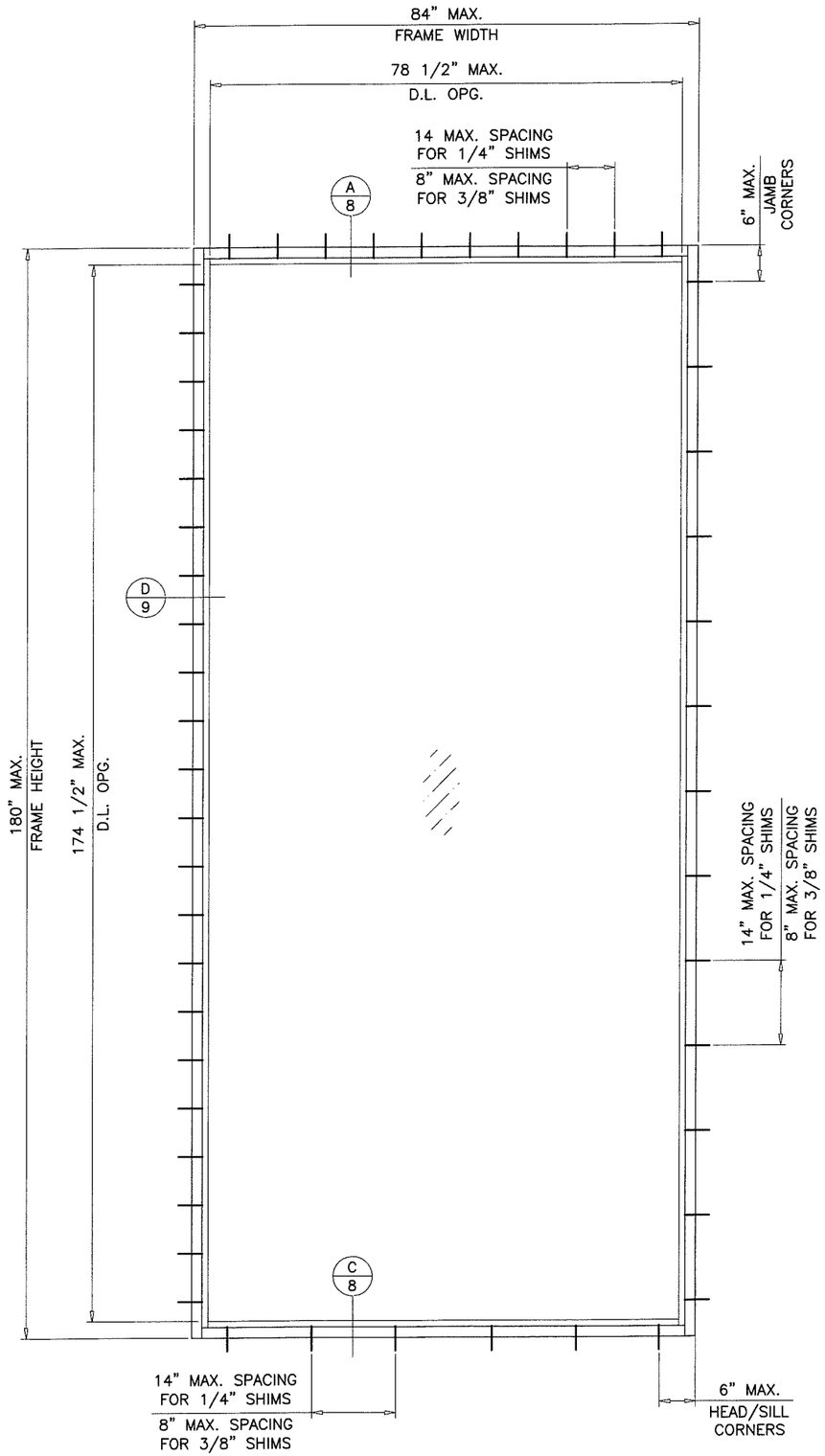

TYPICAL ELEVATION
SINGLE (O) PANEL

MAXIMUM DESIGN LOAD RATING = + 70.0 PSF
− 70.0 PSF
(FOR SINGLE UNITS SHOWN IN THIS SHEET OR SMALLER)

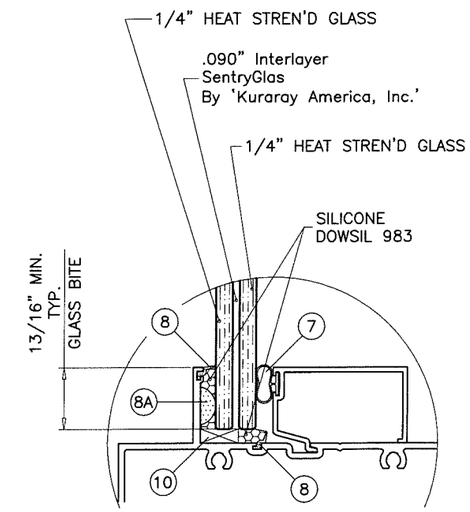

GLASS TYPE 'B1'

PRODUCT REVISED
as complying with the Florida
Building Code
Acceptance No 18-0319.10
Expiration Date April 3, 2023
By Manuel Perez
Miami Dade Product Control

JAVAD AHMAD
LICENSE
No. 70592
Jul 1, 2018
STATE OF FLORIDA
PROFESSIONAL ENGINEER

AL-FAROOQ CORPORATION
ENGINEERS & PRODUCT DEVELOPMENT
9360 SUNSET DRIVE, SUITE 220
MIAMI, FLORIDA 33173 (C.A.N. 3538)
TEL. (305) 264-8100 FAX. (305) 262-6978

STORE\W08-90SW

SERIES 8000 ALUM WINDOW WALL SYSTEM (L.M.I.)

SUNSHINE WINDOWS MANUFACTURING INC.
1785 WEST 33RD PLACE
HIALEAH, FL. 33012
TEL. (305) 364-9952 FAX. (305) 828-5118

revisions:

no	date	by	description
C	03.12.18		UPDATED TO 2017 FBC
D	06.13.18		REV. PER RER COMMENTS

date: 11-11-08
scale: 1/2"=1'-0"
dr. by: TARIQ
chk. by:

drawing no.
W08-90

sheet 1.1 of 12

GLASS LOAD CAPACITY – PSF			
NOMINAL DIMS.		GLASS TYPE 'A'	GLASS TYPE 'B'
D.L.O. WIDTH	D.L.O. HEIGHT	EXT.(+)/INT.(–)	EXT.(+)/INT.(–)
28"	84–1/2"	80.0	130.0
32"		80.0	130.0
36"		80.0	130.0
40"		80.0	130.0
44–1/4"		80.0	130.0
48"		80.0	130.0
52"		80.0	130.0
56–1/4"		80.0	130.0
28"	90–1/2"	80.0	130.0
32"		80.0	130.0
36"		80.0	130.0
40"		80.0	130.0
44–1/4"		80.0	130.0
48"		80.0	130.0
52"		80.0	130.0
28"	96–1/2"	80.0	130.0
32"		80.0	130.0
36"		80.0	130.0
40"		80.0	130.0
44–1/4"		80.0	130.0
48"		80.0	130.0
52"		80.0	127.2
28"	102–1/2"	80.0	130.0
32"		80.0	130.0
36"		80.0	130.0
40"		80.0	130.0
44–1/4"		80.0	130.0
48"		80.0	128.9
28"	108–1/2"	80.0	130.0
32"		80.0	130.0
36"		80.0	130.0
40"		80.0	130.0
44–1/4"		80.0	130.0
28"	114–1/2"	80.0	130.0
32"		80.0	130.0
36"		80.0	130.0
40"		80.0	130.0
44–1/4"		80.0	130.0
48–1/2"		–	90.0
51–1/2"		–	90.0
44–1/4"	120–1/2"	–	90.0
48"		–	90.0
50"		–	90.0
44–1/4"	126–1/2"	–	90.0
48"		–	90.0
40"	132–1/2"	–	90.0
44–1/4"		–	90.0
46"		–	90.0
40"	138–1/2"	–	90.0
44–1/4"		–	90.0

NOTE:
INTERPOLATION BETWEEN WIDTHS ALLOWED.

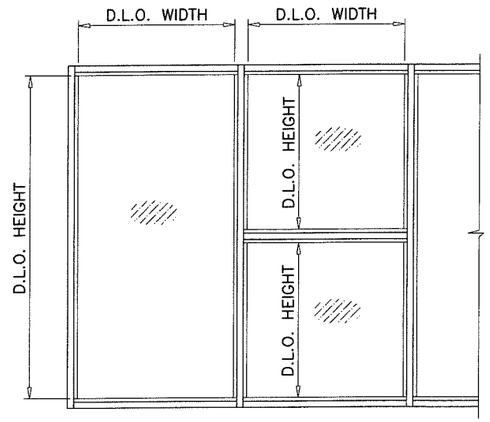

NOTE:
GLASS CAPACITIES ON THIS SHEET ARE BASED ON ASTM E1300–09 (3 SEC. GUSTS).

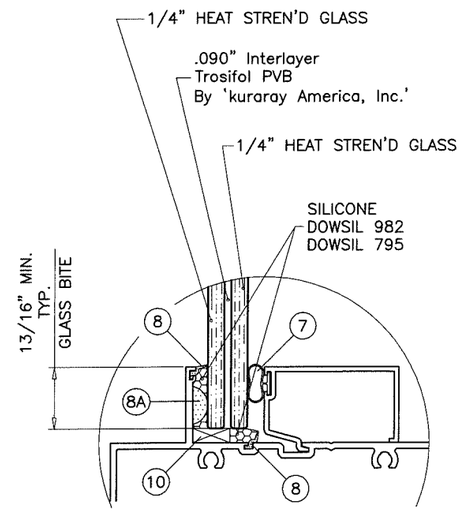

GLASS TYPE 'A'

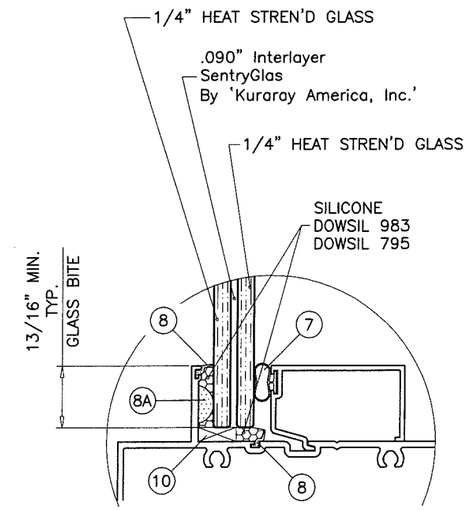

GLASS TYPE 'B'

GLAZING OPTIONS

PRODUCT REVISED
as complying with the Florida Building Code
Acceptance No 18-0319.10
Expiration Date April 3, 2023
By Manuel Perez
Miami-Dade Product Control

JAWAD AHMAD
LICENSE
No. 70592
Jul 1, 2018
STATE OF FLORIDA
PROFESSIONAL ENGINEER

GLASS

AL-FAROOQ CORPORATION
ENGINEERS & PRODUCT DEVELOPMENT
9360 SUNSET DRIVE, SUITE 220
MIAMI, FLORIDA 33173 (C.A.N. 3538)
TEL. (305) 264-8100 FAX. (305) 262-6978
STORE\W08-90SW

SERIES 8000 ALUM WINDOW WALL SYSTEM (L.M.I.)

SUNSHINE WINDOWS MANUFACTURING INC.
1785 WEST 33RD PLACE
HIALEAH, FL. 33012
TEL. (305) 364-9952 FAX. (305) 828-5118

revisions:

no	date	by	description
A	03.05.12		UPDATED TO 2010 FBC
B	01.18.16		UPDATED TO 2014 FBC
C	03.12.18		UPDATED TO 2017 FBC
D	06.13.18		REV. PER RER COMMENTS

date: 11–11–08
scale: 1/2" = 1"
dr. by: TARIQ
chk. by:

drawing no.
W08–90

MULLION LOAD CAPACITY – PSF
MULLIONS WITHOUT INTERMEDIATE HORIZONTALS

NOMINAL DIMS.		JAMB 'J1' MULL 'M1'	JAMB 'J1' MULL 'M2'	JAMB 'J2' JAMB 'J3' MULL 'M3'	JAMB 'J3' MULL 'M4,	UNANCHORED JAMB OPTIONS MULL OPTIONS
WIDTH (W)	FRAME HEIGHT	EXT. (+) INT. (–)	EXT. (+) INT. (–)	EXT. (+) INT. (–)	EXT. (+) INT. (–)	
30"	86–1/2"	130.0	130.0	130.0	130.0	
36"		130.0	130.0	130.0	130.0	
42"		130.0	130.0	130.0	130.0	
48"		130.0	130.0	130.0	130.0	
54"		130.0	130.0	130.0	130.0	
60"		127.3	130.0	130.0	130.0	
30"	90"	130.0	130.0	130.0	130.0	
36"		130.0	130.0	130.0	130.0	
42"		130.0	130.0	130.0	130.0	
48"		130.0	130.0	130.0	130.0	
54"		122.9	130.0	130.0	130.0	
60"		114.9	130.0	130.0	130.0	
30"	96"	130.0	130.0	130.0	130.0	
36"		130.0	130.0	130.0	130.0	
42"		121.1	130.0	130.0	130.0	
48"		108.6	130.0	130.0	130.0	
54"		99.4	130.0	125.6	130.0	
60"		92.4	130.0	116.3	130.0	
30"	98–1/2"	130.0	130.0	130.0	130.0	
36"		127.6	130.0	130.0	130.0	
42"		111.6	130.0	130.0	130.0	
48"		100.0	130.0	130.0	130.0	
54"		91.4	130.0	118.6	130.0	
58"		86.8	130.0	112.4	130.0	
30"	102"	130.0	130.0	130.0	130.0	
36"		114.5	130.0	130.0	130.0	
42"		100.0	130.0	130.0	130.0	
48"		89.5	130.0	120.9	130.0	
54"		81.6	130.0	109.8	130.0	
56"		79.4	127.7	106.7	130.0	
30"	108"	113.5	130.0	130.0	130.0	
36"		95.9	130.0	130.0	130.0	
42"		83.6	130.0	120.3	130.0	
48"		74.6	120.0	107.0	130.0	
53"		68.8	110.7	98.4	130.0	
30"	110–1/2"	105.9	130.0	130.0	130.0	
36"		89.4	130.0	130.0	130.0	
42"		77.8	125.2	114.7	130.0	
48"		69.4	111.6	101.9	130.0	
52"		64.9	104.5	95.1	130.0	
30"	114"	96.2	130.0	130.0	130.0	
36"		81.2	130.0	123.8	130.0	
42"		70.6	113.6	107.4	130.0	
48"		62.9	101.1	95.3	130.0	
50"		60.8	97.7	92.0	130.0	
30"	120"	82.3	130.0	130.0	130.0	
36"		69.3	111.5	111.4	130.0	
42"		60.2	96.9	96.5	130.0	
48"		53.5	86.1	85.5	130.0	

NOTE:
INTERPOLATION BETWEEN WIDTHS ALLOWED.

MULLION LOAD CAPACITY – PSF
MULLIONS W/O INTERMEDIATE HORIZONTALS

NOMINAL DIMS.		JAMB 'J2' JAMB 'J3' MULL 'M4'	UNANCHORED JAMB OPTIONS MULL OPTIONS
WIDTH (W)	FRAME HEIGHT	EXT. (+) INT. (–)	
54"	120"	90.0	
57"		90.0	
30"	126"	90.0	
36"		90.0	
42"		90.0	
48"		90.0	
54"		90.0	
30"	132"	90.0	
36"		90.0	
42"		90.0	
48"		90.0	
52"		90.0	
30"	138"	90.0	
36"		90.0	
42"		90.0	
48"		90.0	
50"		86.9	
30"	144"	90.0	
36"		90.0	
42"		89.4	
48"		79.0	

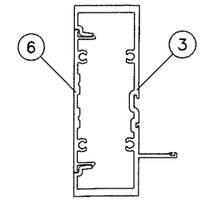

JAMB 'J1'

Ix IN^4	Sx IN^3
6.6509	2.6421

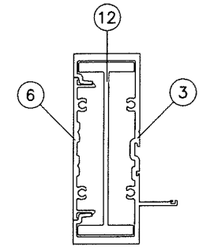

JAMB 'J2'

Ix IN^4	Sx IN^3
10.6486	4.4452

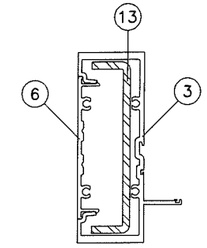

JAMB 'J3'

	Ix IN^4	Sx IN^3
ALUMINUM	6.6509	2.6421
STEEL	2.7506	1.2225
TOTAL Ix ALUM + Ix STL X 2.9	14.6276	

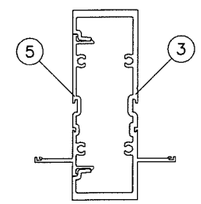

MULLION 'M1'

Ix IN^4	Sx IN^3
6.7195	2.6757

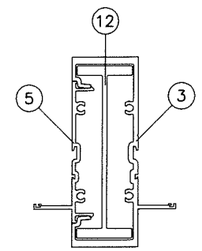

MULLION 'M2'

Ix IN^4	Sx IN^3
10.8072	3.7590

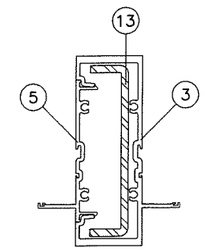

MULLION 'M3'

	Ix IN^4	Sx IN^3
ALUMINUM	6.7195	2.6757
STEEL	2.7506	1.2225
TOTAL Ix ALUM + Ix STL X 2.9	14.6962	

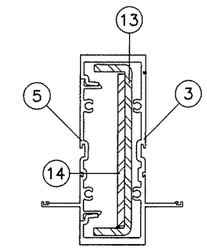

MULLION 'M4'

	Ix IN^4	Sx IN^3
ALUMINUM	6.7195	2.6757
STEEL	3.7533	1.668
TOTAL Ix ALUM + Ix STL X 2.9	17.6047	

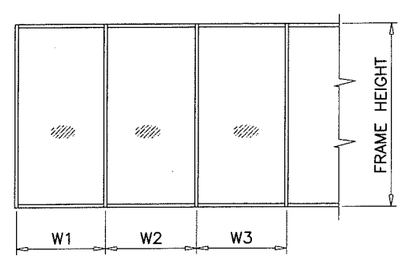

WIDTH (W) = W1
AT FRAME JAMB

WIDTH (W) = $\frac{W2 + W3}{2}$
AT FRAME MULLION

MULLIONS

PRODUCT REVISED
as complying with the Florida
Building Code
Acceptance No 18-0319.10
Expiration Date April 3, 2023
By Manuel Perez
Miami Dade Product Control

JAWAD AHMAD
LICENSE
No. 70592
Jul 1,2018
STATE OF FLORIDA
PROFESSIONAL ENGINEER

AL-FAROOQ CORPORATION
ENGINEERS & PRODUCT DEVELOPMENT
9360 SUNSET DRIVE, SUITE 220
MIAMI, FLORIDA 33173 (C.A.N. 3538)
TEL. (305) 264-8100 FAX. (305) 262-6978

STORE\W08-90SW

SERIES 8000 ALUM WINDOW WALL SYSTEM (L.M.I.)

SUNSHINE WINDOWS MANUFACTURING INC.
1785 WEST 33RD PLACE
HIALEAH, FL. 33012
TEL. (305) 364-9952 FAX. (305) 828-5118

revisions:

no	date	by	description
A	03.05.12		NO CHANGE THIS SHEET
B	01.18.16		UPDATED TO 2014 FBC
C	03.12.18		UPDATED TO 2017 FBC
D	06.13.18		NO CHANGE THIS SHEET

date: 11-11-08
scale: –
dr. by: TARIQ
chk. by:

drawing no. W08–90

MULLION LOAD CAPACITY – PSF
MULLIONS WITH INTERMEDIATE HORIZONTALS

NOMINAL DIMS.		JAMB 'J1' MULL 'M1'	JAMB 'J1' MULL 'M2'	JAMB 'J2' JAMB 'J3' MULL 'M3'	JAMB 'J3' MULL 'M4,	UNANCHORED JAMB OPTIONS / MULL OPTIONS
WIDTH (W)	FRAME HEIGHT	EXT. (+) INT. (–)	EXT. (+) INT. (–)	EXT. (+) INT. (–)	EXT. (+) INT. (–)	
30"	78"	130.0	130.0	130.0	130.0	
36"		130.0	130.0	130.0	130.0	
42"		130.0	130.0	130.0	130.0	
48"		130.0	130.0	130.0	130.0	
54"		130.0	130.0	130.0	130.0	
60"		130.0	130.0	130.0	130.0	
30"	86–1/2"	130.0	130.0	130.0	130.0	
36"		130.0	130.0	130.0	130.0	
42"		130.0	130.0	130.0	130.0	
48"		130.0	130.0	130.0	130.0	
54"		118.9	130.0	130.0	130.0	
60"		107.0	130.0	124.8	130.0	
30"	90"	130.0	130.0	130.0	130.0	
36"		130.0	130.0	130.0	130.0	
42"		130.0	130.0	130.0	130.0	
48"		119.2	130.0	130.0	130.0	
54"		105.9	130.0	128.1	130.0	
60"		95.3	130.0	115.3	130.0	
30"	96"	130.0	130.0	130.0	130.0	
36"		130.0	130.0	130.0	130.0	
42"		112.2	130.0	130.0	130.0	
48"		98.2	130.0	126.7	130.0	
54"		87.3	130.0	112.6	130.0	
60"		78.5	122.1	101.4	130.0	
30"	98–1/2"	130.0	130.0	130.0	130.0	
36"		121.2	130.0	130.0	130.0	
42"		103.9	130.0	130.0	130.0	
48"		90.9	130.0	120.3	130.0	
54"		80.8	128.9	107.0	130.0	
58"		75.2	120.0	99.6	130.0	
30"	102"	130.0	130.0	130.0	130.0	
36"		109.1	130.0	130.0	130.0	
42"		93.6	130.0	128.3	130.0	
48"		81.9	130.0	112.2	130.0	
54"		72.8	117.0	99.8	130.0	
56"		70.2	112.8	96.2	130.0	
30"	108"	110.3	130.0	130.0	130.0	
36"		91.9	130.0	130.0	130.0	
42"		78.8	126.8	114.4	130.0	
48"		69.0	110.9	100.1	130.0	
53"		62.5	100.4	90.7	130.0	
30"	110–1/2"	103.0	130.0	130.0	130.0	
36"		85.8	130.0	127.5	130.0	
42"		73.6	118.3	109.3	130.0	
48"		64.4	103.6	95.6	130.0	
52"		59.4	95.6	88.3	130.0	
30"	114"	93.8	130.0	130.0	130.0	
36"		78.2	125.7	119.8	130.0	
42"		67.0	107.8	102.7	130.0	
48"		58.6	94.3	89.8	130.0	
50"		56.3	90.5	86.2	130.0	
30"	120"	80.4	129.4	129.7	130.0	
36"		67.0	107.8	108.1	130.0	
42"		57.5	92.4	92.7	130.0	
48"		50.3	80.9	81.1	130.0	

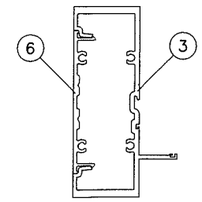

JAMB 'J1'

Ix IN^4	Sx IN^3
6.6509	2.6421

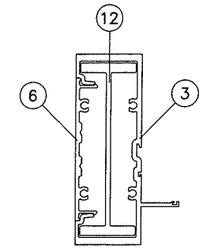

JAMB 'J2'

Ix IN^4	Sx IN^3
10.6486	4.4452

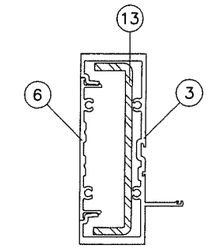

JAMB 'J3'

	Ix IN^4	Sx IN^3
ALUMINUM	6.6509	2.6421
STEEL	2.7506	1.2225
TOTAL Ix ALUM + Ix STL X 2.9	14.6276	

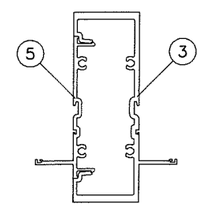

MULLION 'M1'

Ix IN^4	Sx IN^3
6.7195	2.6757

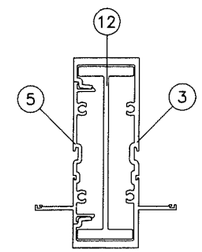

MULLION 'M2'

Ix IN^4	Sx IN^3
10.8072	3.7590

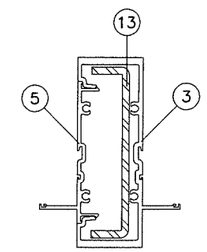

MULLION 'M3'

	Ix IN^4	Sx IN^3
ALUMINUM	6.7195	2.6757
STEEL	2.7506	1.2225
TOTAL Ix ALUM + Ix STL X 2.9	14.6962	

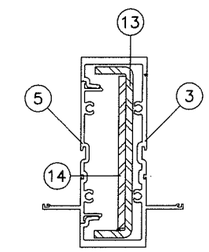

MULLION 'M4'

	Ix IN^4	Sx IN^3
ALUMINUM	6.7195	2.6757
STEEL	3.7533	1.668
TOTAL Ix ALUM + Ix STL X 2.9	17.6047	

MULLION LOAD CAPACITY – PSF
MULLIONS WITH INTERMEDIATE HORIZONTALS

NOMINAL DIMS.		JAMB 'J2' JAMB 'J3' MULL 'M4'	UNANCHORED JAMB OPTIONS / MULL OPTIONS
WIDTH (W)	FRAME HEIGHT	EXT. (+) INT. (–)	
54"	120"	90.0	
57"		90.0	
30"	126"	90.0	
36"		90.0	
42"		90.0	
48"		90.0	
54"		90.0	
30"	132"	90.0	
36"		90.0	
42"		90.0	
48"		90.0	
52"		90.0	
30"	138"	90.0	
36"		90.0	
42"		90.0	
48"		86.6	
50"		83.1	
30"	144"	90.0	
36"		90.0	
42"		87.1	
48"		76.2	

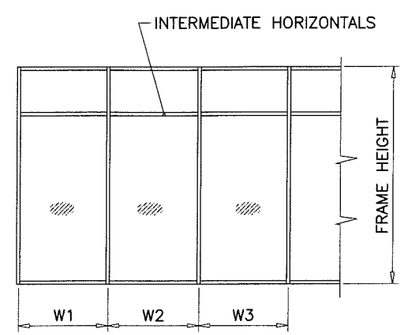

WIDTH (W) = W1
AT FRAME JAMB

WIDTH (W) = $\frac{W2 + W3}{2}$
AT FRAME MULLION

NOTE:
INTERPOLATION BETWEEN WIDTHS ALLOWED.

PRODUCT REVISED
as complying with the Florida Building Code
Acceptance No 18-0319.10
Expiration Date April 3, 2023
By Manuel Diaz
Miami Dade Product Control

MULLIONS

JAWAD AHMAD
LICENSE
No. 70592
Jul 1,2018
STATE OF FLORIDA
PROFESSIONAL ENGINEER

AL-FAROOQ CORPORATION
ENGINEERS & PRODUCT DEVELOPMENT
9360 SUNSET DRIVE, SUITE 220
MIAMI, FLORIDA 33173 (C.A.N. 3538)
TEL. (305) 264-8100 FAX. (305) 262-6978

STORE\W08–90SW

SERIES 8000 ALUM WINDOW WALL SYSTEM (L.M.I.)

SUNSHINE WINDOWS MANUFACTURING INC.
1785 WEST 33RD PLACE
HIALEAH, FL. 33012
TEL. (305) 364–9952 FAX. (305) 828–5118

revisions:

no	date	by	description
A	03.05.12		NO CHANGE THIS SHEET
B	01.18.16		UPDATED TO 2014 FBC
C	03.12.18		UPDATED TO 2017 FBC
D	06.13.18		NO CHANGE THIS SHEET

date: 11–11–08
scale: –
dr. by: TARIQ
chk. by:

drawing no. W08–90

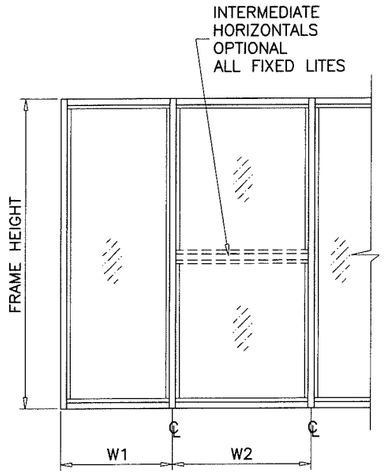

$$\text{WIDTH (W)} = \frac{W1 + W2}{2}$$

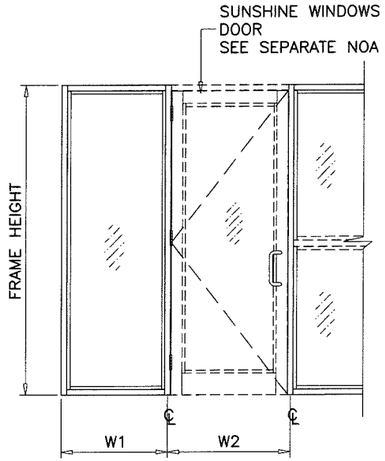

$$\text{WIDTH (W)} = \frac{W1 + W2}{2}$$

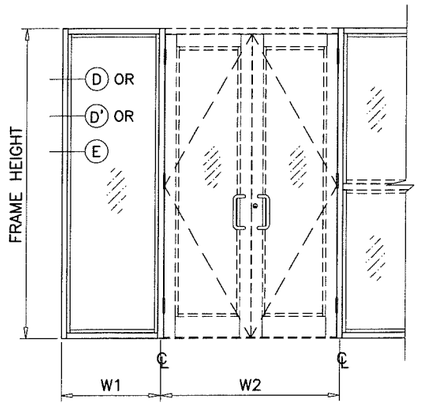

$$\text{WIDTH (W)} = \frac{W1}{2} + \frac{W2}{4}$$

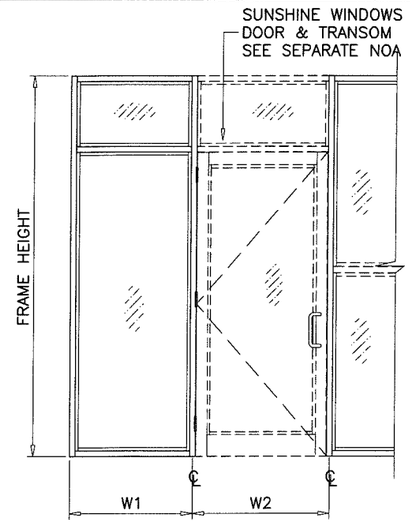

$$\text{WIDTH (W)} = \frac{W1 + W2}{2}$$

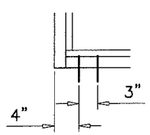

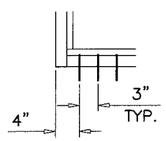

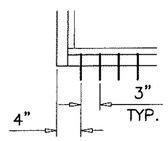

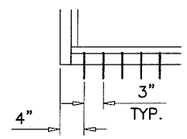

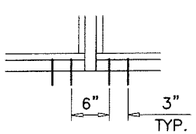

A2, B2, C2, D2

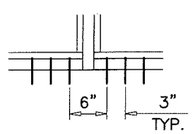

A3, B3, C3, D3

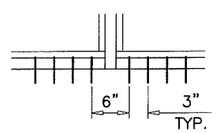

A4, B4, C4, D4

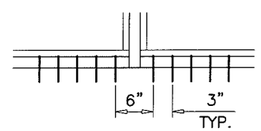

A5, B5, C5

ANCHORS TYPES: SEE SHEET 8 FOR DESCRIPTION

A2 = (2) ANCHORS TYPE 'A' AT EACH SIDE OF JAMB AND MULLION
B2 = (2) ANCHORS TYPE 'B' AT EACH SIDE OF JAMB AND MULLION
C2 = (2) ANCHORS TYPE 'C' AT EACH SIDE OF JAMB AND MULLION
D2 = (2) ANCHORS TYPE 'D' AT EACH SIDE OF JAMB AND MULLION

A3 = (3) ANCHORS TYPE 'A' AT EACH SIDE OF JAMB AND MULLION
B3 = (3) ANCHORS TYPE 'B' AT EACH SIDE OF JAMB AND MULLION
C3 = (3) ANCHORS TYPE 'C' AT EACH SIDE OF JAMB AND MULLION
D3 = (3) ANCHORS TYPE 'D' AT EACH SIDE OF JAMB AND MULLION

A4 = (4) ANCHORS TYPE 'A' AT EACH SIDE OF JAMB AND MULLION
B4 = (4) ANCHORS TYPE 'B' AT EACH SIDE OF JAMB AND MULLION
C4 = (4) ANCHORS TYPE 'C' AT EACH SIDE OF JAMB AND MULLION
D4 = (4) ANCHORS TYPE 'D' AT EACH SIDE OF JAMB AND MULLION

A5 = (5) ANCHORS TYPE 'A' AT EACH SIDE OF JAMB AND MULLION
B5 = (5) ANCHORS TYPE 'B' AT EACH SIDE OF JAMB AND MULLION
C5 = (5) ANCHORS TYPE 'C' AT EACH SIDE OF JAMB AND MULLION

ALL OTHER ANCHORS TO BE SPACED AS PER ELEVATION.

SEE SHEETS 5, 5.1, 5.2 & 7 FOR ANCHOR CAPACITY CHART.
SEE SHEET 8 FOR ANCHOR DESCRIPTION.

ANCHORS

PRODUCT REVISED
as complying with the Florida
Building Code
Acceptance No 18-0319.10
Expiration Date April 3, 2023
By Manuel Perez
Miami Dade Product Control

JAMAD AHMAD
LICENSE
No. 70592
Jul 1, 2018
STATE OF FLORIDA
PROFESSIONAL ENGINEER

AL-FAROOQ CORPORATION
ENGINEERS & PRODUCT DEVELOPMENT
9360 SUNSET DRIVE, SUITE 220
MIAMI, FLORIDA 33173 (C.A.N. 3538)
TEL. (305) 264-8100 FAX. (305) 262-6978

STORE\W08-90SW

SERIES 8000 ALUM WINDOW WALL SYSTEM (L.M.I.)

SUNSHINE WINDOWS MANUFACTURING INC.
1785 WEST 33RD PLACE
HIALEAH, FL. 33012
TEL. (305) 364-9952 FAX. (305) 828-5118

revisions:

no	date	by	description
A	03.05.12		NO CHANGE THIS SHEET
B	01.18.16		UPDATED TO 2014 FBC
C	03.12.18		UPDATED TO 2017 FBC
D	06.13.18		NO CHANGE THIS SHEET

date: 11-11-08
scale: –
dr. by: TARIQ
chk. by:

drawing no.
W08-90

ANCHOR LOAD CAPACITY – PSF

EXT.(+) & INT.(–)

NOMINAL DIMS.		ANCHORS TYPE 'A'								ANCHORS TYPE 'B'								ANCHORS TYPE 'C'								1/4" MAX. SHIM		
		3/8" SHIM SPACE				1/2" SHIM SPACE				3/8" SHIM SPACE				1/2" SHIM SPACE				3/8" SHIM SPACE				1/2" SHIM SPACE				ANCHORS TYPE 'D'		
WIDTH (W)	FRAME HEIGHT	A2	A3	A4	A5	A2	A3	A4	A5	B2	B3	B4	B5	B2	B3	B4	B5	C2	C3	C4	C5	C2	C3	C4	C5	D2	D3	D4
30"	86–1/2"	61.3	91.9	122.2	130.0	47.9	71.9	95.9	119.9	67.9	101.9	130.0	130.0	53.3	79.9	106.5	130.0	115.9	130.0	130.0	130.0	91.4	130.0	130.0	130.0	130.0	130.0	130.0
36"		51.1	76.6	101.8	127.6	40.0	59.9	79.9	99.9	56.6	84.9	113.2	130.0	44.4	66.6	88.8	111.0	96.6	130.0	130.0	130.0	76.2	114.3	130.0	130.0	130.0	130.0	130.0
42"		43.8	65.6	87.3	109.4	34.2	51.4	68.5	85.6	48.5	72.8	97.0	121.3	38.1	57.1	76.1	95.1	82.8	123.7	130.0	130.0	65.3	98.0	130.0	130.0	124.0	130.0	130.0
48"		38.3	57.4	76.4	95.7	30.0	44.9	59.9	74.9	42.5	63.7	84.9	106.1	33.3	49.9	66.6	83.2	72.4	108.2	130.0	130.0	57.2	85.7	114.3	130.0	108.5	130.0	130.0
54"		34.0	51.1	67.9	85.1	26.6	40.0	53.3	66.6	37.7	56.6	75.5	94.3	29.6	44.4	59.2	74.0	64.4	96.2	128.7	130.0	50.8	76.2	101.6	127.0	96.4	130.0	130.0
60"		30.6	45.9	61.1	76.6	24.0	36.0	47.9	59.9	34.0	50.9	67.9	84.9	26.6	40.0	53.3	66.6	57.9	86.6	115.9	130.0	45.7	68.6	91.4	114.3	86.8	130.0	130.0
30"	90"	58.9	88.3	117.4	130.0	46.1	69.1	92.2	115.2	65.3	97.9	130.0	130.0	51.2	76.8	102.4	128.0	111.4	130.0	130.0	130.0	87.9	130.0	130.0	130.0	130.0	130.0	130.0
36"		49.1	73.6	97.9	122.7	38.4	57.6	76.8	96.0	54.4	81.6	108.8	130.0	42.7	64.0	85.3	106.7	92.8	130.0	130.0	130.0	73.2	109.9	130.0	130.0	130.0	130.0	130.0
42"		42.1	63.1	83.9	105.1	32.9	49.4	65.8	82.3	46.6	69.9	93.3	116.6	36.6	54.9	73.1	91.4	79.5	118.9	130.0	130.0	62.8	94.2	125.6	130.0	119.2	130.0	130.0
48"		36.8	55.2	73.4	92.0	28.8	43.2	57.6	72.0	40.8	61.2	81.6	102.0	32.0	48.0	64.0	80.0	69.6	104.0	130.0	130.0	54.9	82.4	109.9	130.0	104.3	130.0	130.0
54"		32.7	49.1	65.2	81.8	25.6	38.4	51.2	64.0	36.3	54.4	72.5	90.7	28.4	42.7	56.9	71.1	61.9	92.4	123.7	130.0	48.8	73.2	97.7	122.1	92.7	130.0	130.0
60"		29.4	44.2	58.7	73.6	23.0	34.6	46.1	57.6	32.6	49.0	65.3	81.6	25.6	38.4	51.2	64.0	55.7	83.2	111.4	130.0	43.9	65.9	87.9	109.9	83.4	125.1	130.0
30"	96"	55.2	82.8	110.1	130.0	43.2	64.8	86.4	108.0	61.2	91.8	122.4	130.0	48.0	72.0	96.0	120.0	104.4	130.0	130.0	130.0	82.4	123.6	130.0	130.0	130.0	130.0	130.0
36"		46.0	69.0	91.8	115.0	36.0	54.0	72.0	90.0	51.0	76.5	102.0	127.5	40.0	60.0	80.0	100.0	87.0	130.0	130.0	130.0	68.7	103.0	130.0	130.0	130.0	130.0	130.0
42"		39.4	59.1	78.6	98.6	30.9	46.3	61.7	77.1	43.7	65.6	87.4	109.3	34.3	51.4	68.6	85.7	74.6	111.4	130.0	130.0	58.9	88.3	117.7	130.0	111.7	130.0	130.0
48"		34.5	51.8	68.8	86.3	27.0	40.5	54.0	67.5	38.3	57.4	76.5	95.6	30.0	45.0	60.0	75.0	65.3	97.5	130.0	130.0	51.5	77.3	103.0	128.8	97.8	130.0	130.0
54"		30.7	46.0	61.2	76.7	24.0	36.0	48.0	60.0	34.0	51.0	68.0	85.0	26.7	40.0	53.3	66.7	58.0	86.7	116.0	130.0	45.8	68.7	91.6	114.4	86.9	130.0	130.0
60"		27.6	41.4	55.1	69.0	21.6	32.4	43.2	54.0	30.6	45.9	61.2	76.5	24.0	36.0	48.0	60.0	52.2	78.0	104.4	130.0	41.2	61.8	82.4	103.0	78.2	117.3	130.0
30"	98–1/2"	53.8	80.7	107.3	130.0	42.1	63.2	84.2	105.3	59.6	89.5	119.3	130.0	46.8	70.2	93.6	117.0	101.8	130.0	130.0	130.0	80.3	120.5	130.0	130.0	130.0	130.0	130.0
36"		44.8	67.2	89.4	112.1	35.1	52.6	70.2	87.7	49.7	74.6	99.4	124.3	39.0	58.5	78.0	97.5	84.8	126.7	130.0	130.0	66.9	100.4	130.0	130.0	127.0	130.0	130.0
42"		38.4	57.6	76.6	96.1	30.1	45.1	60.1	75.2	42.6	63.9	85.2	106.5	33.4	50.1	66.8	83.5	72.7	108.6	130.0	130.0	57.4	86.0	114.7	130.0	108.9	130.0	130.0
48"		33.6	50.4	67.1	84.1	26.3	39.5	52.6	65.8	37.3	55.9	74.6	93.2	29.2	43.9	58.5	73.1	63.6	95.0	127.2	130.0	50.2	75.3	100.4	125.5	95.3	130.0	130.0
54"		29.9	44.8	59.6	74.7	23.4	35.1	46.8	58.5	33.1	49.7	66.3	82.8	26.0	39.0	52.0	65.0	56.5	84.5	113.1	130.0	44.6	66.9	89.2	111.5	84.7	127.0	130.0
60"		26.9	40.3	53.7	67.2	21.1	31.6	42.1	52.6	29.8	44.7	59.6	74.6	23.4	35.1	46.8	58.5	50.9	76.0	101.8	127.2	40.2	60.2	80.3	100.4	76.2	114.3	130.0
30"	102"	52.0	77.9	103.6	129.9	40.7	61.0	81.3	101.6	57.6	86.4	115.2	130.0	45.2	67.8	90.4	112.9	98.3	130.0	130.0	130.0	77.6	116.3	130.0	130.0	130.0	130.0	130.0
36"		43.3	64.9	86.4	108.2	33.9	50.8	67.8	84.7	48.0	72.0	96.0	120.0	37.6	56.5	75.3	94.1	81.9	122.4	130.0	130.0	64.6	96.9	129.3	130.0	122.7	130.0	130.0
42"		37.1	55.7	74.0	92.8	29.0	43.6	58.1	72.6	41.1	61.7	82.3	102.9	32.3	48.4	64.5	80.7	70.2	104.9	130.0	130.0	55.4	83.1	110.8	130.0	105.1	130.0	130.0
48"		32.5	48.7	64.8	81.2	25.4	38.1	50.8	63.5	36.0	54.0	72.0	90.0	28.2	42.4	56.5	70.6	61.4	91.8	122.8	130.0	48.5	72.7	96.9	121.2	92.0	130.0	130.0
54"		28.9	43.3	57.6	72.2	22.6	33.9	45.2	56.5	32.0	48.0	64.0	80.0	25.1	37.6	50.2	62.7	54.6	81.6	109.2	130.0	43.1	64.6	86.2	107.7	81.8	122.7	130.0
60"		26.0	39.0	51.8	64.9	20.3	30.5	40.7	50.8	28.8	43.2	57.6	72.0	22.6	33.9	45.2	56.5	49.1	73.4	98.3	122.8	38.8	58.2	77.6	96.9	73.6	110.4	130.0
30"	108"	49.1	73.6	97.9	122.7	38.4	57.6	76.8	96.0	54.4	81.6	108.8	130.0	42.7	64.0	85.3	106.7	92.8	130.0	130.0	130.0	73.2	109.9	130.0	130.0	130.0	130.0	130.0
36"		40.9	61.3	81.6	102.2	32.0	48.0	64.0	80.0	45.3	68.0	90.7	113.3	35.6	53.3	71.1	88.9	77.3	115.6	130.0	130.0	61.0	91.6	122.1	130.0	115.9	130.0	130.0
42"		35.0	52.6	69.9	87.6	27.4	41.1	54.9	68.6	38.9	58.3	77.7	97.1	30.5	45.7	61.0	76.2	66.3	99.0	130.0	130.0	52.3	78.5	104.6	130.0	99.3	130.0	130.0
48"		30.7	46.0	61.2	76.7	24.0	36.0	48.0	60.0	34.0	51.0	68.0	85.0	26.7	40.0	53.3	66.7	58.0	86.7	116.0	130.0	45.8	68.7	91.6	114.4	86.9	130.0	130.0
54"		27.3	40.9	54.4	68.1	21.3	32.0	42.7	53.3	30.2	45.3	60.4	75.6	23.7	35.6	47.4	59.3	51.6	77.0	103.1	128.9	40.7	61.0	81.4	101.7	77.2	115.9	130.0
60"		24.5	36.8	48.9	61.3	–	28.8	38.4	48.0	27.2	40.8	54.4	68.0	21.3	32.0	42.7	53.3	46.4	69.3	92.8	116.0	36.6	54.9	73.2	91.6	69.5	104.3	130.0
30"	110–1/2"	48.0	71.9	95.7	119.9	37.5	56.3	75.1	93.8	53.2	79.8	106.3	130.0	41.7	62.6	83.4	104.3	90.7	130.0	130.0	130.0	71.6	107.4	130.0	130.0	130.0	130.0	130.0
36"		40.0	59.9	79.7	99.9	31.3	46.9	62.6	78.2	44.3	66.5	88.6	110.8	34.8	52.1	69.5	86.9	75.6	112.9	130.0	130.0	59.7	89.5	119.3	130.0	113.2	130.0	130.0
42"		34.3	51.4	68.3	85.6	26.8	40.2	53.6	67.0	38.0	57.0	76.0	94.9	29.8	44.7	59.6	74.5	64.8	96.8	129.6	130.0	51.1	76.7	102.3	127.8	97.1	130.0	130.0
48"		30.0	45.0	59.8	74.9	23.5	35.2	46.9	58.6	33.2	49.8	66.5	83.1	26.1	39.1	52.1	65.2	56.7	84.7	113.4	130.0	44.7	67.1	89.5	111.9	84.9	127.4	130.0
54"		26.6	40.0	53.1	66.6	20.9	31.3	41.7	52.1	29.5	44.3	59.1	73.8	23.2	34.8	46.3	57.9	50.4	75.3	100.8	126.0	39.8	59.7	79.5	99.4	75.5	113.2	130.0
60"		24.0	36.0	47.8	59.9	–	28.1	37.5	46.9	26.6	39.9	53.2	66.5	20.9	31.3	41.7	52.1	45.4	67.8	90.7	113.4	35.8	53.7	71.6	89.5	67.9	101.9	130.0
30"	114"	46.5	69.7	92.7	116.2	36.4	54.6	72.8	90.9	51.5	77.3	103.1	128.8	40.4	60.6	80.8	101.1	87.9	130.0	130.0	130.0	69.4	104.1	130.0	130.0	130.0	130.0	130.0
36"		38.7	58.1	77.3	96.8	30.3	45.5	60.6	75.8	42.9	64.4	85.9	107.4	33.7	50.5	67.4	84.2	73.3	109.5	130.0	130.0	57.8	86.7	115.6	130.0	109.8	130.0	130.0
42"		33.2	49.8	66.2	83.0	26.0	39.0	52.0	65.0	36.8	55.2	73.6	92.0	28.9	43.3	57.7	72.2	62.8	93.8	125.6	130.0	49.6	74.3	99.1	123.9	94.1	130.0	130.0
48"		29.1	43.6	57.9	72.6	22.7	34.1	45.5	56.8	32.2	48.3	64.4	80.5	25.3	37.9	50.5	63.2	54.9	82.1	109.9	130.0	43.4	65.1	86.7	108.4	82.3	123.5	130.0
54"		25.8	38.7	51.5	64.6	20.2	30.3	40.4	50.5	28.6	42.9	57.3	71.6	22.5	33.7	44.9	56.1	48.8	73.0	97.7	122.1	38.5	57.8	77.1	96.4	73.2	109.8	130.0
60"		23.2	34.9	46.4	58.1	–	27.3	36.4	45.5	25.8	38.7	51.5	64.4	20.2	30.3	40.4	50.5	44.0	65.7	87.9	109.9	34.7	52.0	69.4	86.7	65.9	98.8	130.0

SEE SHEETS 5 AND 8 FOR ANCHOR DESCRIPTION.

PRODUCT REVISED
as complying with the Florida Building Code
Acceptance No 18-0319.10
Expiration Date April 3, 2023
By Manuel Perez
Miami Dade Product Control

ANCHORS

JAVAD AHMAD
LICENSE
No. 70592
Jul 1, 2018
STATE OF FLORIDA
PROFESSIONAL ENGINEER

AL-FAROOQ CORPORATION
ENGINEERS & PRODUCT DEVELOPMENT
9360 SUNSET DRIVE, SUITE 220
MIAMI, FLORIDA 33173 (C.A.N. 3538)
TEL. (305) 264-8100 FAX. (305) 262-6978

STORE\W08-90SW

SERIES 8000 ALUM WINDOW WALL SYSTEM (L.M.I.)

SUNSHINE WINDOWS MANUFACTURING INC.
1785 WEST 33RD PLACE
HIALEAH, FL. 33012
TEL. (305) 364-9952 FAX. (305) 828-5118

revisions:

no	date	by	description
A	03.05.12		NO CHANGE THIS SHEET
B	01.18.16		UPDATED TO 2014 FBC
C	03.12.18		UPDATED TO 2017 FBC
D	06.13.18		NO CHANGE THIS SHEET

date: 11-11-08
scale: –
dr. by: TARIQ
chk. by:

drawing no. W08–90

ANCHOR LOAD CAPACITY – PSF

EXT.(+) & INT.(–)

NOMINAL DIMS.		ANCHORS TYPE 'A'								ANCHORS TYPE 'B'								ANCHORS TYPE 'C'								1/4" MAX. SHIM		
		3/8" SHIM SPACE				1/2" SHIM SPACE				3/8" SHIM SPACE				1/2" SHIM SPACE				3/8" SHIM SPACE				1/2" SHIM SPACE				ANCHORS TYPE 'D'		
WIDTH (W)	FRAME HEIGHT	A2	A3	A4	A5	A2	A3	A4	A5	B2	B3	B4	B5	B2	B3	B4	B5	C2	C3	C4	C5	C2	C3	C4	C5	D2	D3	D4
30"	120"	44.2	66.2	88.1	110.4	34.6	51.8	69.1	86.4	49.0	73.4	97.9	122.4	38.4	57.6	76.8	96.0	83.5	124.8	130.0	130.0	65.9	98.9	130.0	130.0	125.1	130.0	130.0
36"		36.8	55.2	73.4	92.0	28.8	43.2	57.6	72.0	40.8	61.2	81.6	102.0	32.0	48.0	64.0	80.0	69.6	104.0	130.0	130.0	54.9	82.4	109.9	130.0	104.3	130.0	130.0
42"		31.5	47.3	62.9	78.9	24.7	37.0	49.4	61.7	35.0	52.5	69.9	87.4	27.4	41.1	54.9	68.6	59.7	89.1	119.3	130.0	47.1	70.6	94.2	117.7	89.4	130.0	130.0
48"		27.6	41.4	55.1	69.0	21.6	32.4	43.2	54.0	30.6	45.9	61.2	76.5	24.0	36.0	48.0	60.0	52.2	78.0	104.4	130.0	41.2	61.8	82.4	103.0	78.2	117.3	130.0
54"		24.5	36.8	48.9	61.3	–	28.8	38.4	48.0	27.2	40.8	54.4	68.0	21.3	32.0	42.7	53.3	46.4	69.3	90.0	90.0	36.6	54.9	73.2	90.0	69.5	90.0	90.0
30"	126"	42.1	63.1	83.9	90.0	32.9	49.4	65.8	82.3	46.6	69.9	90.0	90.0	36.6	54.9	73.1	90.0	79.5	90.0	90.0	90.0	62.8	90.0	90.0	90.0	90.0	90.0	90.0
36"		35.0	52.6	69.9	87.6	27.4	41.1	54.9	68.6	38.9	58.3	77.7	90.0	30.5	45.7	61.0	76.2	66.3	90.0	90.0	90.0	52.3	78.5	90.0	90.0	90.0	90.0	90.0
42"		30.0	45.1	59.9	75.1	23.5	35.3	47.0	58.8	33.3	50.0	66.6	83.3	26.1	39.2	52.2	65.3	56.8	84.9	90.0	90.0	44.8	67.3	89.7	90.0	85.1	90.0	90.0
48"		26.3	39.4	52.4	65.7	20.6	30.9	41.1	51.4	29.1	43.7	58.3	72.9	22.9	34.3	45.7	57.1	49.7	74.3	90.0	90.0	39.2	58.9	78.5	90.0	74.5	90.0	90.0
54"		23.4	35.0	46.6	58.4	–	27.4	36.6	45.7	25.9	38.9	51.8	64.8	20.3	30.5	40.6	50.8	44.2	66.0	88.4	90.0	34.9	52.3	69.8	87.2	66.2	90.0	90.0
30"	132"	40.1	60.2	80.1	90.0	31.4	47.1	62.8	78.5	44.5	66.8	89.0	90.0	34.9	52.4	69.8	87.3	75.9	90.0	90.0	90.0	59.9	89.9	90.0	90.0	90.0	90.0	90.0
36"		33.5	50.2	66.7	83.6	26.2	39.3	52.4	65.5	37.1	55.6	74.2	90.0	29.1	43.6	58.2	72.7	63.3	90.0	90.0	90.0	49.9	74.9	90.0	90.0	90.0	90.0	90.0
42"		28.7	43.0	57.2	71.7	22.4	33.7	44.9	56.1	31.8	47.7	63.6	79.5	24.9	37.4	49.9	62.3	54.2	81.0	90.0	90.0	42.8	64.2	85.6	90.0	81.2	90.0	90.0
48"		25.1	37.6	50.0	62.7	–	29.5	39.3	49.1	27.8	41.7	55.6	69.5	21.8	32.7	43.6	54.5	47.5	70.9	90.0	90.0	37.5	56.2	74.9	90.0	71.1	90.0	90.0
30"	138"	38.4	57.6	76.6	90.0	30.1	45.1	60.1	75.1	42.6	63.9	85.1	90.0	33.4	50.1	66.8	83.5	72.6	90.0	90.0	90.0	57.3	86.0	90.0	90.0	90.0	90.0	90.0
36"		32.0	48.0	63.8	80.0	25.0	37.6	50.1	62.6	35.5	53.2	71.0	88.7	27.8	41.7	55.7	69.6	60.5	90.0	90.0	90.0	47.8	71.7	90.0	90.0	90.0	90.0	90.0
42"		27.4	41.1	54.7	68.6	21.5	32.2	42.9	53.7	30.4	45.6	60.8	76.0	23.9	35.8	47.7	59.6	51.9	77.5	90.0	90.0	40.9	61.4	81.9	90.0	77.7	90.0	90.0
48"		24.0	36.0	47.9	60.0	–	28.2	37.6	47.0	26.6	39.9	53.2	66.5	20.9	31.3	41.7	52.2	45.4	67.8	90.0	90.0	35.8	53.7	71.7	89.6	68.0	90.0	90.0
30"	144"	36.8	55.2	73.4	90.0	28.8	43.2	57.6	72.0	40.8	61.2	81.6	90.0	32.0	48.0	64.0	80.0	69.6	90.0	90.0	90.0	54.9	82.4	90.0	90.0	90.0	90.0	90.0
36"		30.7	46.0	61.2	76.7	24.0	36.0	48.0	60.0	34.0	51.0	68.0	85.0	26.7	40.0	53.3	66.7	58.0	86.7	90.0	90.0	45.8	68.7	90.0	90.0	86.9	90.0	90.0
42"		26.3	39.4	52.4	65.7	20.6	30.9	41.1	51.4	29.1	43.7	58.3	72.9	22.9	34.3	45.7	57.1	49.7	74.3	90.0	90.0	39.2	58.9	78.5	90.0	74.5	90.0	90.0
48"		23.0	34.5	45.9	57.5	–	27.0	36.0	45.0	25.5	38.3	51.0	63.8	20.0	30.0	40.0	50.0	43.5	65.0	87.0	90.0	34.3	51.5	68.7	85.8	65.2	90.0	90.0

INTERPOLATION BETWEEN WIDTHS OR HEIGHTS ALLOWED.

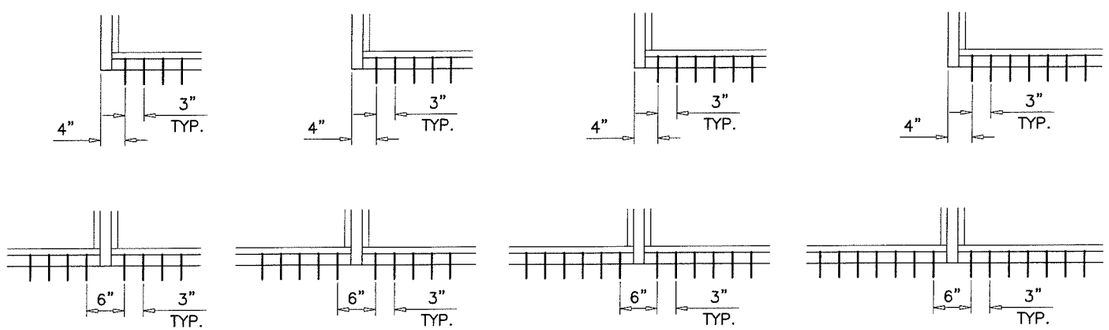

A4, B4, C4 — A5, B5, C5 — A6, B6, C6 — A7, B7

ANCHORS TYPES: SEE SHEET 8 FOR DESCRIPTION

A4 = (4) ANCHORS TYPE 'A' AT EACH SIDE OF JAMB AND MULLION
B4 = (4) ANCHORS TYPE 'B' AT EACH SIDE OF JAMB AND MULLION
C4 = (4) ANCHORS TYPE 'C' AT EACH SIDE OF JAMB AND MULLION
D4 = (4) ANCHORS TYPE 'D' AT EACH SIDE OF JAMB AND MULLION

A5 = (5) ANCHORS TYPE 'A' AT EACH SIDE OF JAMB AND MULLION
B5 = (5) ANCHORS TYPE 'B' AT EACH SIDE OF JAMB AND MULLION
C5 = (5) ANCHORS TYPE 'C' AT EACH SIDE OF JAMB AND MULLION

A6 = (6) ANCHORS TYPE 'A' AT EACH SIDE OF JAMB AND MULLION
B6 = (6) ANCHORS TYPE 'B' AT EACH SIDE OF JAMB AND MULLION
C6 = (6) ANCHORS TYPE 'C' AT EACH SIDE OF JAMB AND MULLION

A7 = (7) ANCHORS TYPE 'A' AT EACH SIDE OF JAMB AND MULLION
B7 = (7) ANCHORS TYPE 'B' AT EACH SIDE OF JAMB AND MULLION

ALL OTHER ANCHORS TO BE SPACED AS PER ELEVATION.

PRODUCT REVISED
as complying with the Florida
Building Code
Acceptance No. 18-0319.18
Expiration Date April 3, 2023
By Manuel Perez
Miami-Dade Product Control

ANCHORS

JAWAD AHMAD
LICENSE
No. 70592
Jul 1,2018
STATE OF FLORIDA
PROFESSIONAL ENGINEER

AL-FAROOQ CORPORATION
ENGINEERS & PRODUCT DEVELOPMENT
9360 SUNSET DRIVE, SUITE 220
MIAMI, FLORIDA 33173 (C.A.N. 3638)
TEL. (305) 264-8100 FAX. (305) 262-6978

STORE\W08-90SW

SERIES 8000 ALUM WINDOW WALL SYSTEM (L.M.I.)

SUNSHINE WINDOWS MANUFACTURING INC.
1785 WEST 33RD PLACE
HIALEAH, FL. 33012
TEL. (305) 364-9952 FAX. (305) 828-5118

revisions:

no	date	by	description
C	03.12.18		UPDATED TO 2017 FBC
D	06.13.18		NO CHANGE THIS SHEET

date: 11-11-08
scale: –
dr. by: TARIQ
chk. by:

drawing no. W08-90

DOOR MULLION LOAD CAPACITY-PSF					
SIDELITE WIDTH INCHES	FRAME HEIGHT INCHES	JAMB 'JD1' MULL 'MD1'	JAMB 'JD1' MULL 'MD2'	JAMB 'JD2' JAMB 'JD3' MULL 'MD3'	JAMB 'JD3' MULL 'MD4'
		EXT. (+) INT. (−)	EXT. (+) INT. (−)	EXT. (+) INT. (−)	EXT. (+) INT. (−)
32	86−1/2	120.0	120.0	120.0	120.0
36		120.0	120.0	120.0	120.0
42		120.0	120.0	120.0	120.0
48		120.0	120.0	120.0	120.0
54		120.0	120.0	120.0	120.0
60		120.0	120.0	120.0	120.0
32	98−1/2	112.6	120.0	120.0	120.0
36		107.1	120.0	120.0	120.0
42		99.7	120.0	120.0	120.0
48		93.3	120.0	120.0	120.0
54		87.7	120.0	116.1	120.0
32	110−1/2	79.8	120.0	118.5	120.0
36		75.8	120.0	112.6	120.0
42		70.6	113.6	104.9	120.0
48		66.1	106.3	98.2	120.0

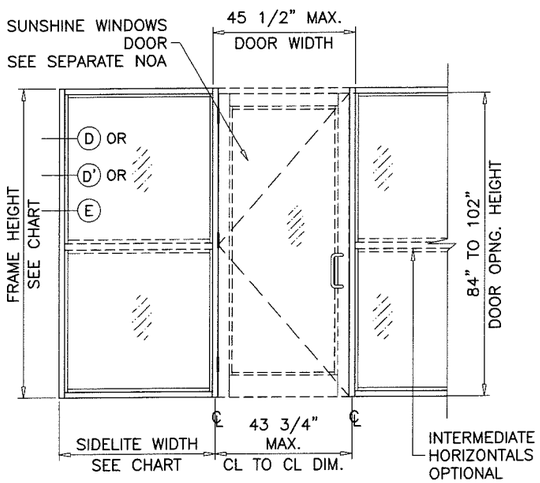

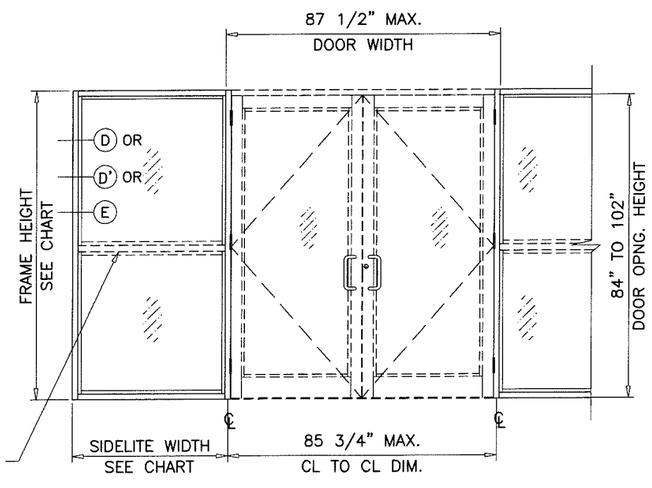

DOOR MULLION LOAD CAPACITY-PSF					
SIDELITE WIDTH INCHES	FRAME HEIGHT INCHES	JAMB 'JD1' MULL 'MD1'	JAMB 'JD1' MULL 'MD2'	JAMB 'JD2' JAMB 'JD3' MULL 'MD3'	JAMB 'JD3' MULL 'MD4'
		EXT. (+) INT. (−)	EXT. (+) INT. (−)	EXT. (+) INT. (−)	EXT. (+) INT. (−)
32	98−1/2	90.0	90.0	90.0	90.0
36		90.0	90.0	90.0	90.0
42		90.0	90.0	90.0	90.0
48		90.0	90.0	90.0	90.0
54		87.7	90.0	90.0	90.0
32	110−1/2	79.8	90.0	90.0	90.0
36		75.8	90.0	90.0	90.0
42		70.6	90.0	90.0	90.0
48		66.1	90.0	90.0	90.0
32	114	72.6	90.0	90.0	90.0
36		69.1	90.0	90.0	90.0
42		64.3	90.0	90.0	90.0
48		60.2	90.0	90.0	90.0
32	120	62.3	90.0	90.0	90.0
36		59.2	90.0	90.0	90.0
42		55.2	88.7	89.1	90.0
48		51.6	83.0	83.4	90.0

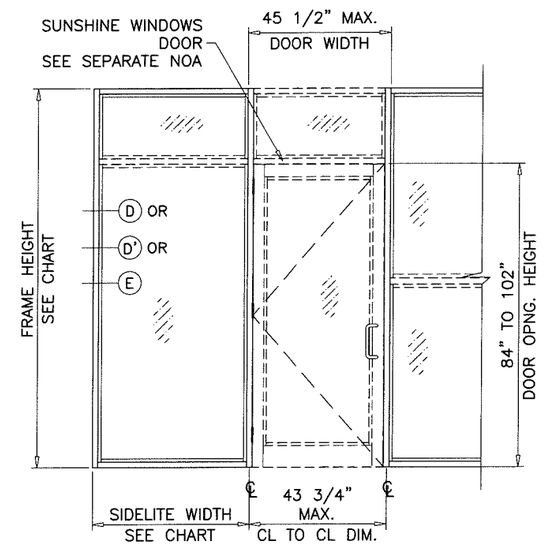

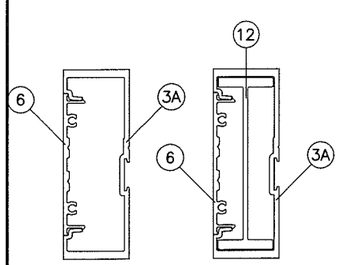

JAMB 'JD1'

Ix IN^4	Sx IN^3
6.570	2.7226

JAMB 'JD2'

Ix IN^4	Sx IN^3
10.6577	3.8057

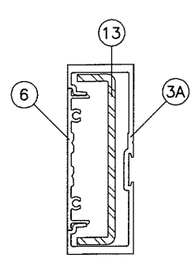

JAMB 'JD3'

	Ix IN^4	Sx IN^3
ALUMINUM	6.570	2.7226
STEEL	2.7506	1.2224
TOTAL Ix ALUM + Ix STL X 2.9	14.5467	

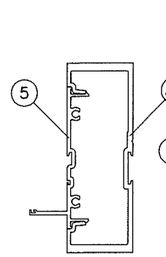

MULLION 'MD1'

Ix IN^4	Sx IN^3
6.7195	2.6757

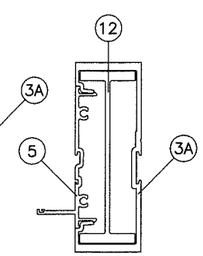

MULLION 'MD2'

Ix IN^4	Sx IN^3
10.8072	4.4788

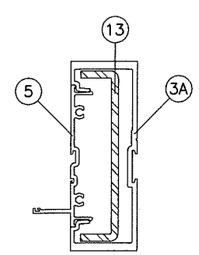

MULLION 'MD3'

	Ix IN^4	Sx IN^3
ALUMINUM	6.7195	2.6757
STEEL	2.7506	1.224
TOTAL Ix ALUM + Ix STL X 2.9	14.6962	

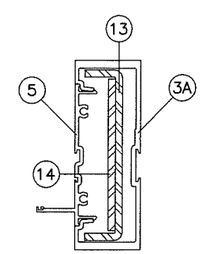

MULLION 'MD4'

	Ix IN^4	Sx IN^3
ALUMINUM	6.7195	2.6757
STEEL	3.7533	1.668
TOTAL Ix ALUM + Ix STL X 2.9	17.6041	

DOOR−WINDOWALL TRANSITION MULLION

PRODUCT REVISED
as complying with the Florida
Building Code
Acceptance No 18-0319.10
Expiration Date April 3, 2023
By Manuel Gerez
Miami-Dade Product Control

JAVAD AHMAD
LICENSE
No. 70592
Jul 1, 2018
STATE OF FLORIDA
PROFESSIONAL ENGINEER

AL-FAROOQ CORPORATION
ENGINEERS & PRODUCT DEVELOPMENT
9360 SUNSET DRIVE, SUITE 220
MIAMI, FLORIDA 33173 (C.A.N. 3538)
TEL. (305) 264-8100 FAX. (305) 262-6978

STORE\W08−90SW

SERIES 8000 ALUM WINDOW WALL SYSTEM (L.M.I.)

SUNSHINE WINDOWS MANUFACTURING INC.
1785 WEST 33RD PLACE
HIALEAH, FL. 33012
TEL. (305) 364−9952 FAX. (305) 828−5118

revisions:

no	date	by	description
A	03.05.12		NO CHANGE THIS SHEET
B	01.18.16		UPDATED TO 2014 FBC
C	03.12.18		UPDATED TO 2017 FBC
D	06.13.18		NO CHANGE THIS SHEET

date: 11−11−08
scale: −
dr. by: TARIQ
chk. by:

drawing no. W08−90

DOOR MULLION LOAD CAPACITY - PSF

NOMINAL DIMS.				JAMB 'JD1' MULL 'MD1'	JAMB 'JD1' MULL 'MD2'	JAMB 'JD2' JAMB 'JD3' MULL 'MD3'	JAMB 'JD3' MULL 'MD4'
WIDTH (W1) INCHES	WIDTH (W2) INCHES	FRAME HEIGHT INCHES	DOOR HEIGHT INCHES	EXT.(+) INT.(−)	EXT.(+) INT.(−)	EXT.(+) INT.(−)	EXT.(+) INT.(−)
85-3/4	30	96	84	90.0	90.0	90.0	90.0
	36			90.0	90.0	90.0	90.0
	42			90.0	90.0	90.0	90.0
	48			90.0	90.0	90.0	90.0
	54			90.0	90.0	90.0	90.0
	60			85.7	90.0	90.0	90.0
	30	102		90.0	90.0	90.0	90.0
	36			86.9	90.0	90.0	90.0
	42			81.5	90.0	90.0	90.0
	48			76.7	90.0	90.0	90.0
	54			72.5	90.0	89.0	90.0
	30	108		74.2	90.0	90.0	90.0
	36			69.5	90.0	89.1	90.0
	42			65.4	90.0	84.4	90.0
	48			61.7	90.0	80.2	90.0
	30	114		60.2	90.0	81.7	90.0
	36			56.6	90.0	77.4	90.0
	42			53.3	85.8	73.4	87.8
	48			50.5	81.2	69.9	83.5
	30	120		49.7	80.0	71.9	85.9
	36			46.8	75.3	68.1	81.5
	42			44.2	71.2	64.8	77.4
	48			41.9	67.5	61.7	73.8
85-3/4	30	102	90	90.0	90.0	90.0	90.0
	36			90.0	90.0	90.0	90.0
	42			86.6	90.0	90.0	90.0
	48			81.2	90.0	90.0	90.0
	54			76.5	90.0	90.0	90.0
	30	108		79.3	90.0	90.0	90.0
	36			74.0	90.0	90.0	90.0
	42			69.3	90.0	88.9	90.0
	48			65.2	90.0	84.3	90.0
	30	114		63.9	90.0	85.6	90.0
	36			59.9	90.0	80.8	90.0
	42			56.3	90.0	76.5	90.0
	48			53.1	85.4	72.7	86.9
	30	120		52.4	84.2	74.5	89.1
	36			49.2	79.1	70.5	84.3
	42			46.3	74.5	66.9	80.0
	48			43.8	70.5	63.6	76.1

DOOR MULLION LOAD CAPACITY - PSF

NOMINAL DIMS.				JAMB 'JD1' MULL 'MD1'	JAMB 'JD1' MULL 'MD2'	JAMB 'JD2' JAMB 'JD3' MULL 'MD3'	JAMB 'JD3' MULL 'MD4'
WIDTH (W1) INCHES	WIDTH (W2) INCHES	FRAME HEIGHT INCHES	DOOR HEIGHT INCHES	EXT.(+) INT.(−)	EXT.(+) INT.(−)	EXT.(+) INT.(−)	EXT.(+) INT.(−)
85-3/4	30	108	96	84.6	90.0	90.0	90.0
	36			78.6	90.0	90.0	90.0
	42			73.4	90.0	90.0	90.0
	48			68.8	90.0	89.7	90.0
	30	114		68.2	90.0	90.0	90.0
	36			63.5	90.0	85.3	90.0
	42			59.5	90.0	80.6	90.0
	48			56.0	90.0	76.3	90.0
	30	120		55.5	89.3	78.0	90.0
	36			51.9	83.5	73.6	88.0
	42			48.8	78.5	69.7	83.3
	48			46.0	74.0	66.2	79.1
85-3/4	30	114	102	72.4	90.0	90.0	90.0
	36			67.2	90.0	90.0	90.0
	42			62.7	90.0	85.9	90.0
	48			58.8	90.0	81.1	90.0
	30	120		59.0	90.0	82.6	90.0
	36			55.0	88.4	77.7	90.0
	42			51.5	82.8	73.3	87.7
	48			48.4	77.8	69.4	83.0
85-3/4	30	120	110-1/2	63.7	90.0	90.0	90.0
	36			59.0	90.0	85.7	90.0
	42			55.0	88.4	80.4	90.0
	48			51.5	82.8	75.7	90.0

INTERPOLATION BETWEEN WIDTHS OR HEIGHTS ALLOWED.

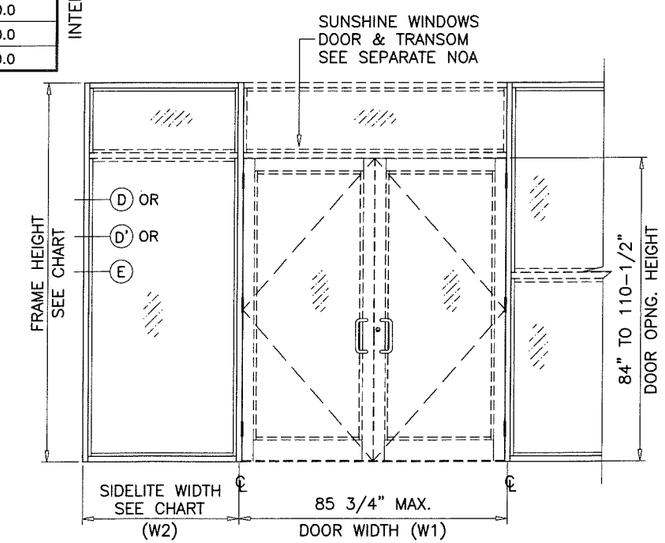

DOOR-WINDOWALL
TRANSITION MULLION

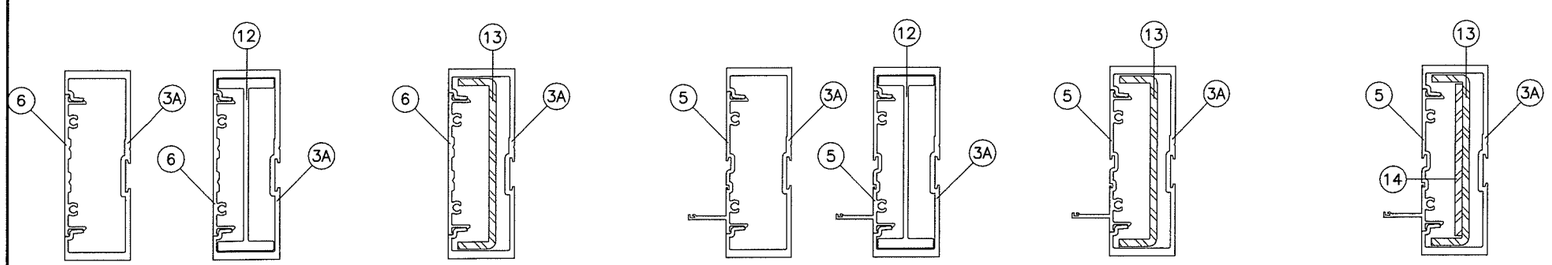

JAMB 'JD1'

Ix IN^4	Sx IN^3
6.570	2.7226

JAMB 'JD2'

Ix IN^4	Sx IN^3
10.6577	3.8057

JAMB 'JD3'

	Ix IN^4	Sx IN^3
ALUMINUM	6.570	2.7226
STEEL	2.7506	1.2224
TOTAL Ix ALUM + Ix STL X 2.9	14.5467	

MULLION 'MD1'

Ix IN^4	Sx IN^3
6.7195	2.6757

MULLION 'MD2'

Ix IN^4	Sx IN^3
10.8072	4.4788

MULLION 'MD3'

	Ix IN^4	Sx IN^3
ALUMINUM	6.7195	2.6757
STEEL	2.7506	1.224
TOTAL Ix ALUM + Ix STL X 2.9	14.6962	

MULLION 'MD4'

	Ix IN^4	Sx IN^3
ALUMINUM	6.7195	2.6757
STEEL	3.7533	1.668
TOTAL Ix ALUM + Ix STL X 2.9	17.6041	

PRODUCT REVISED
as complying with the Florida
Building Code
Acceptance No 18-0319.10
Expiration Date APRIL 3, 2023
By Manuel Perez
Miami-Dade Product Control

JAWAD AHMAD
LICENSE
No. 70592
Jul 1,2018
STATE OF FLORIDA
PROFESSIONAL ENGINEER

AL-FAROOQ CORPORATION
ENGINEERS & PRODUCT DEVELOPMENT
9360 SUNSET DRIVE, SUITE 220
MIAMI, FLORIDA 33173 (C.A.N. 3538)
TEL. (305) 264-8100 FAX. (305) 262-6978
STORE\W08-90SW

SERIES 8000 ALUM WINDOW WALL SYSTEM (L.M.I.)

SUNSHINE WINDOWS MANUFACTURING INC.
1785 WEST 33RD PLACE
HIALEAH, FL. 33012
TEL. (305) 364-9952 FAX. (305) 828-5118

revisions:

no	date	by	description
C	03.12.18		UPDATED TO 2017 FBC
D	06.13.18		NO CHANGE THIS SHEET

date: 11-11-08
scale: –
dr. by: TARIQ
chk. by:

drawing no.
W08-90

DOOR MULLION HEAD ANCHOR LOAD CAPACITY – PSF						
NOMINAL DIMS.				'C4'	'C5'	'C6'
WIDTH (W1) INCHES	WIDTH (W2) INCHES	FRAME HEIGHT INCHES	DOOR HEIGHT INCHES	EXT.(+) INT.(–)	EXT.(+) INT.(–)	EXT.(+) INT.(–)
85–3/4	30	96	84	89.6	90.0	90.0
	36			85.0	90.0	90.0
	42			80.8	90.0	90.0
	48			77.0	90.0	90.0
	54			73.6	90.0	90.0
	60			70.4	88.0	90.0
	30	102		86.0	90.0	90.0
	36			81.5	90.0	90.0
	42			77.4	90.0	90.0
	48			73.8	90.0	90.0
	54			70.4	88.0	90.0
	30	108		82.7	90.0	90.0
	36			78.3	90.0	90.0
	42			74.3	90.0	90.0
	48			70.8	88.4	90.0
	30	114		79.7	90.0	90.0
	36			75.4	90.0	90.0
	42			71.5	89.4	90.0
	48			68.0	85.0	90.0
	30	120		76.9	90.0	90.0
	36			72.6	90.0	90.0
	42			68.9	86.1	90.0
	48			65.4	81.8	90.0
85–3/4	30	102	90	84.1	90.0	90.0
	36			79.7	90.0	90.0
	42			75.8	90.0	90.0
	48			72.3	90.0	90.0
	54			69.1	86.4	90.0
	30	108		80.9	90.0	90.0
	36			76.7	90.0	90.0
	42			72.9	90.0	90.0
	48			69.4	86.8	90.0
	30	114		78.0	90.0	90.0
	36			73.9	90.0	90.0
	42			70.1	87.7	90.0
	48			66.8	83.5	90.0
	30	120		75.3	90.0	90.0
	36			71.2	89.1	90.0
	42			67.6	84.5	90.0
	48			64.3	80.4	90.0

DOOR MULLION HEAD ANCHOR LOAD CAPACITY – PSF						
NOMINAL DIMS.				'C4'	'C5'	'C6'
WIDTH (W1) INCHES	WIDTH (W2) INCHES	FRAME HEIGHT INCHES	DOOR HEIGHT INCHES	EXT.(+) INT.(–)	EXT.(+) INT.(–)	EXT.(+) INT.(–)
85–3/4	30	108	96	79.2	90.0	90.0
	36			75.1	90.0	90.0
	42			71.5	89.3	90.0
	48			68.1	85.2	90.0
	30	114		76.4	90.0	90.0
	36			72.4	90.0	90.0
	42			68.8	86.0	90.0
	48			65.6	82.0	90.0
	30	120		73.8	90.0	90.0
	36			69.9	87.4	90.0
	42			66.4	83.0	90.0
	48			63.2	79.0	90.0
85–3/4	30	114	102	74.9	90.0	90.0
	36			71.0	88.8	90.0
	42			67.6	84.5	90.0
	48			64.4	80.5	90.0
	30	120		72.4	90.0	90.0
	36			68.6	85.7	90.0
	42			65.2	81.5	90.0
	48			62.1	77.7	90.0
85–3/4	30	120	110–1/2	70.4	88.0	90.0
	36			66.8	83.5	90.0
	42			63.6	79.5	90.0
	48			60.7	75.9	90.0

INTERPOLATION BETWEEN WIDTHS OR HEIGHTS ALLOWED.

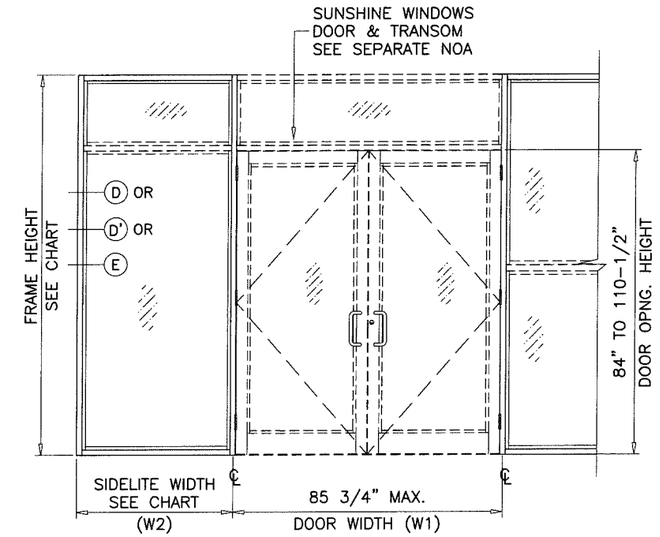

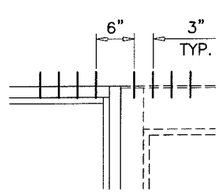

'C4'

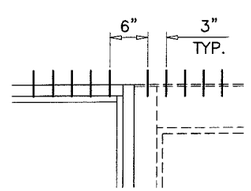

'C5'

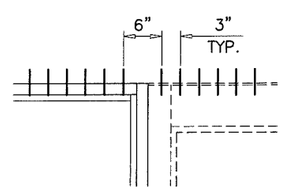

'C6'

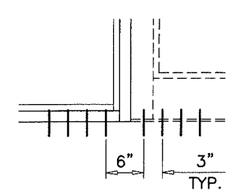

'C4' AT SILL ALL CASES

ANCHORS TYPES: SEE SHEET 8 FOR DESCRIPTION

C4 = (4) ANCHORS TYPE 'C' AT EACH SIDE OF DOOR MULLION

C5 = (5) ANCHORS TYPE 'C' AT EACH SIDE OF DOOR MULLION

C6 = (6) ANCHORS TYPE 'C' AT EACH SIDE OF DOOR MULLION

ALL OTHER ANCHORS TO BE SPACED AS PER ELEVATION.

TRANSITION MULLION ANCHORS

PRODUCT REVISED
as complying with the Florida
Building Code
Acceptance No 18-0319.10
Expiration Date April 3, 2023
By Manuel Perez
Miami-Dade Product Control

JAWAD AHMAD
LICENSE
No. 70592
Jul 1, 2018
STATE OF FLORIDA
PROFESSIONAL ENGINEER

AL-FAROOQ CORPORATION
ENGINEERS & PRODUCT DEVELOPMENT
9360 SUNSET DRIVE, SUITE 220
MIAMI, FLORIDA 33173 (C.A.N. 3538)
TEL. (305) 264-8100 FAX. (305) 262-6978

STORE\W08-90SW

SERIES 8000 ALUM WINDOW WALL SYSTEM (L.M.I.)

SUNSHINE WINDOWS MANUFACTURING INC.
1785 WEST 33RD PLACE
HIALEAH, FL. 33012
TEL. (305) 364-9952 FAX. (305) 828-5118

revisions:

no	date	by	description
A	03.05.12		NO CHANGE THIS SHEET
B	01.18.16		UPDATED TO 2014 FBC
C	03.12.18		UPDATED TO 2017 FBC
D	06.13.18		NO CHANGE THIS SHEET

date: 11-11-08
scale: –
dr. by: TARIQ
chk. by:

drawing no. W08–90

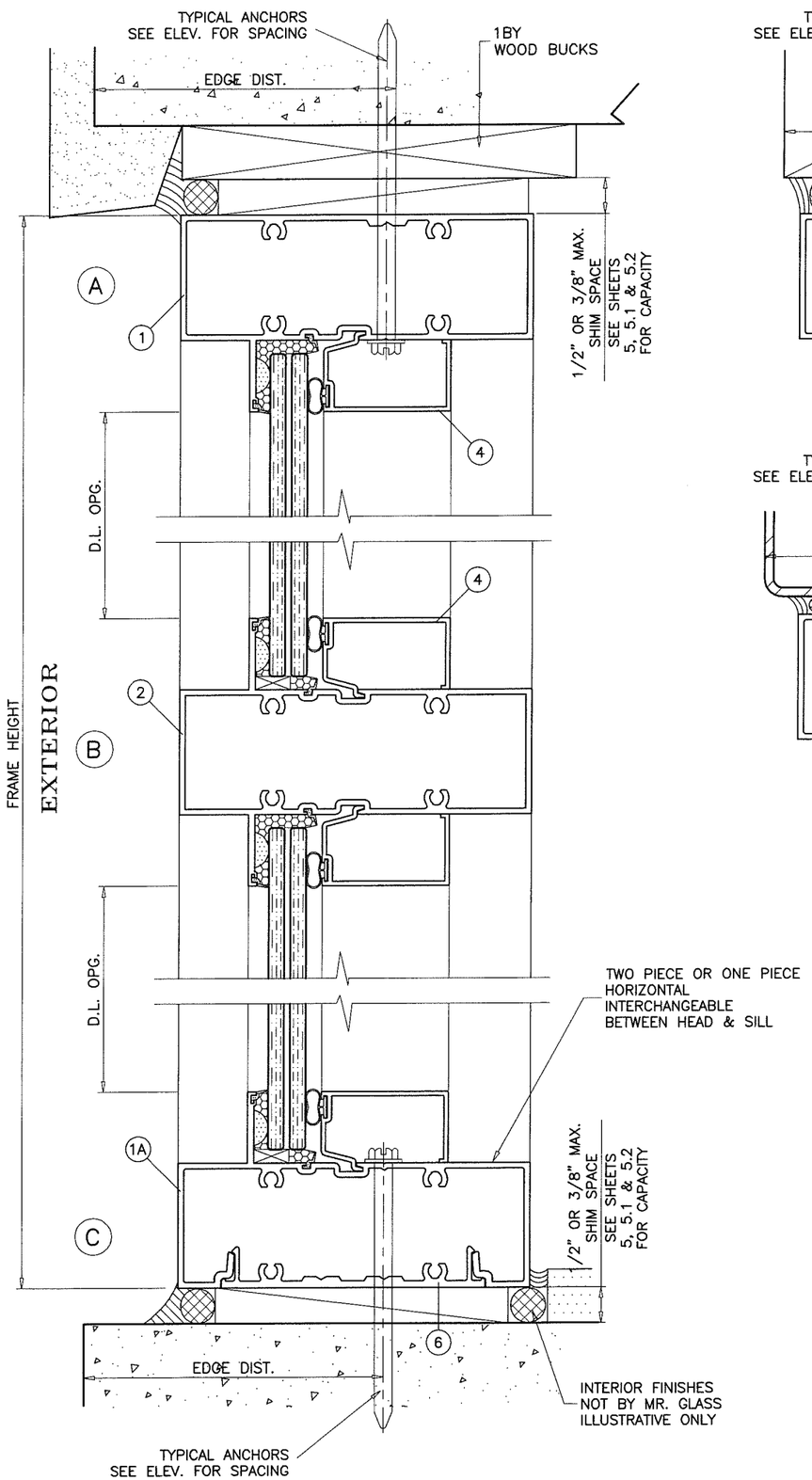

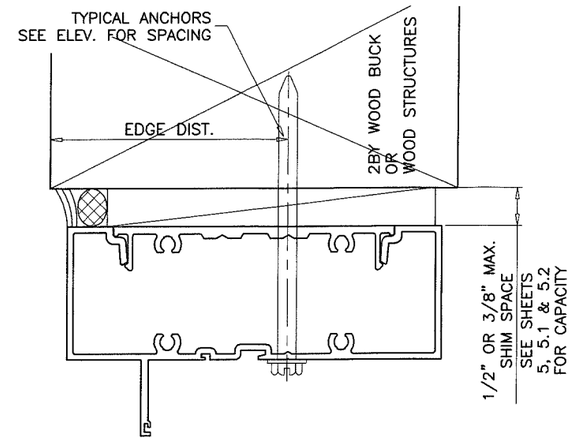

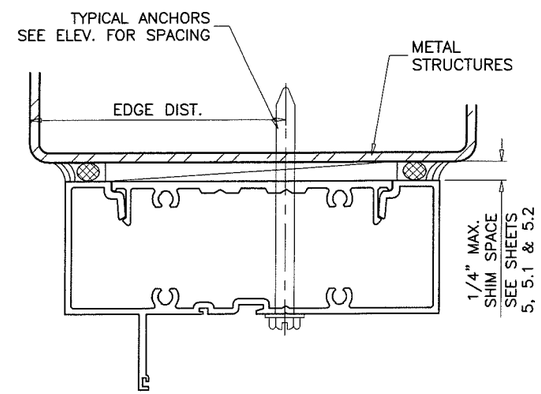

TYPICAL ANCHORS: SEE ELEV. FOR SPACING

TYPE 'A'– 1/4" DIA ULTRACON BY 'ELCO' (Fu=177 KSI, Fy=155 KSI)
INTO 2BY WOOD BUCKS OR WOOD STRUCTURES
WITH 1–1/2" MIN. PENETRATION INTO WOOD

THRU 1BY WOOD BUCKS INTO CONCRETE
WITH 1–1/4" MIN. EMBED INTO CONCRETE

DIRECTLY INTO CONCRETE
WITH 1–1/4" MIN. EMBED INTO CONC.

ANCHOR EDGE DISTANCES

INTO CONCRETE AND MASONRY = 2–1/2" MIN.
INTO WOOD STRUCTURE = 1" MIN.

TYPE 'B'– 1/4" DIA KWIK CON II BY 'HILTI' (Fu=163 KSI, Fy=157 KSI)
INTO 2BY WOOD BUCKS OR WOOD STRUCTURES
WITH 1–1/2" MIN. PENETRATION INTO WOOD

THRU 1BY WOOD BUCKS INTO CONCRETE
WITH 1–1/4" MIN. EMBED INTO CONCRETE

DIRECTLY INTO CONCRETE
WITH 1–1/4" MIN. EMBED INTO CONC.

ANCHOR EDGE DISTANCES

INTO CONCRETE AND MASONRY = 3" MIN.
INTO WOOD STRUCTURE = 1" MIN.

TYPE 'C'– 5/16" DIA ULTRACON BY 'ELCO' (Fu=177 KSI, Fy=155 KSI)
INTO 2BY WOOD BUCKS OR WOOD STRUCTURES
WITH 1–1/2" MIN. PENETRATION INTO WOOD

THRU 1BY WOOD BUCKS INTO CONCRETE
WITH 1–1/4" MIN. EMBED INTO CONCRETE

DIRECTLY INTO CONCRETE
WITH 1–1/4" MIN. EMBED INTO CONC.

ANCHOR EDGE DISTANCES

INTO CONCRETE AND MASONRY = 3" MIN.
INTO WOOD STRUCTURE = 1–1/4" MIN.

TYPE 'D'– 1/4" DIA. TEKS OR SELF DRILLING SCREWS ST/ST (GRADE 5 CRS)
INTO METAL STRUCTURES
(3) THREADS MIN. PENETRATION BEYOND SUBSTRATE
ALUMINUM: 1/8" THK. MIN. (6063–T5 MIN.)
STEEL: 1/8" THK. MIN. (Fy = 36 KSI MIN.)
(STEEL IN CONTACT WITH ALUMINUM TO BE PLATED OR PAINTED)

ANCHOR EDGE DISTANCES

INTO METAL STRUCTURE = 1/2" MIN.

WOOD AT HEAD, SILL OR JAMBS SG = 0.55 MIN.
CONCRETE AT HEAD, SILL OR JAMBS f'c = 3000 PSI MIN.
C–90 HOLLOW/FILLED BLOCK AT JAMBS f'm = 2000 PSI MIN.

SEALANTS:

ALL FRAME CORNERS, JOINTS, MULLION SEAMS AND PERIMETER OF GLAZING BEAD TO FRAME SEALED WITH SILICONE SEALANT.

WOOD BUCKS AND METAL STRUCTURES NOT BY SUNSHINE WDW. MUST SUPPORT LOADS IMPOSED BY GLAZING SYSTEM AND TRANSFER THEM TO THE BUILDING STRUCTURE.

PRODUCT REVISED
as complying with the Florida
Building Code
Acceptance No 18-0319.10
Expiration Date April 3, 2023
By Manuel Perez
Miami-Dade Product Control

JAWAD AHMAD
LICENSE
No. 70592
Jul 1,2018
STATE OF FLORIDA
PROFESSIONAL ENGINEER

AL-FAROOQ CORPORATION
ENGINEERS & PRODUCT DEVELOPMENT
9360 SUNSET DRIVE, SUITE 220
MIAMI, FLORIDA 33173 (C.A.N. 3538)
TEL. (305) 264-8100 FAX. (305) 262-6978

STORE\W08-90SW

SERIES 8000 ALUM WINDOW WALL SYSTEM (L.M.I.)

SUNSHINE WINDOWS MANUFACTURING INC.
1785 WEST 33RD PLACE
HIALEAH, FL. 33012
TEL. (305) 364-9952 FAX. (305) 828-5118

revisions:

no	date	by	description
A	03.05.12		NO CHANGE THIS SHEET
B	01.18.16		UPDATED TO 2014 FBC
C	03.12.18		UPDATED TO 2017 FBC
D	06.13.18		REV. PER RER COMMENTS

date: 11-11-08
scale: 1/2" = 1"
dr. by: TARIQ
chk. by:

drawing no.
W08–90

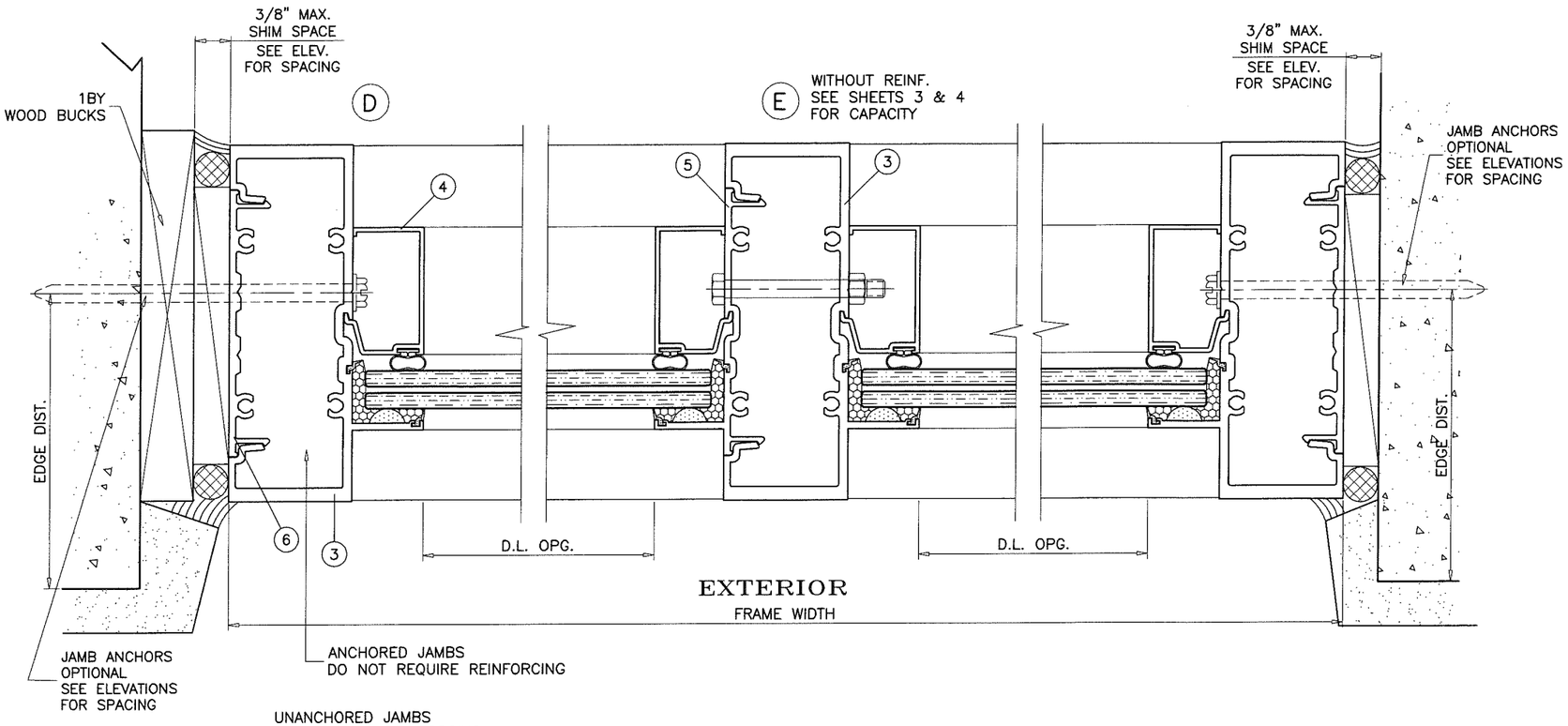

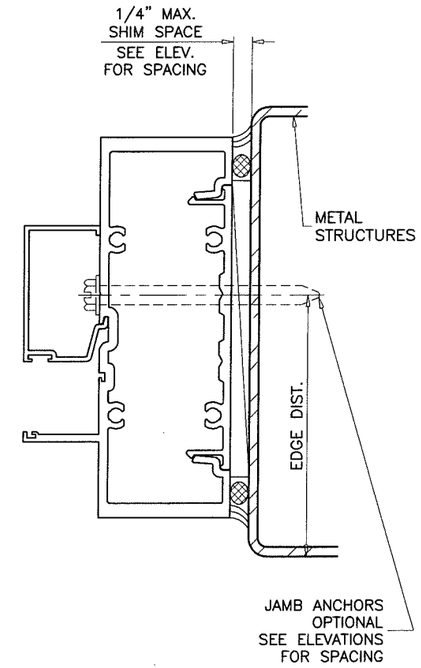

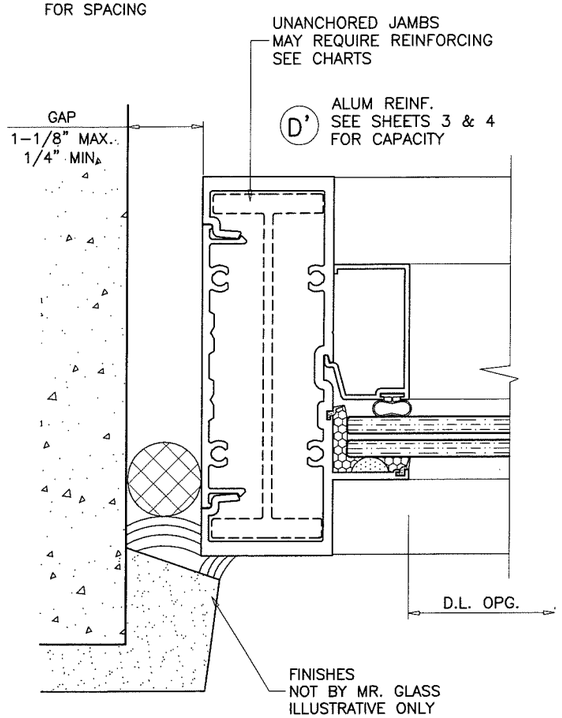

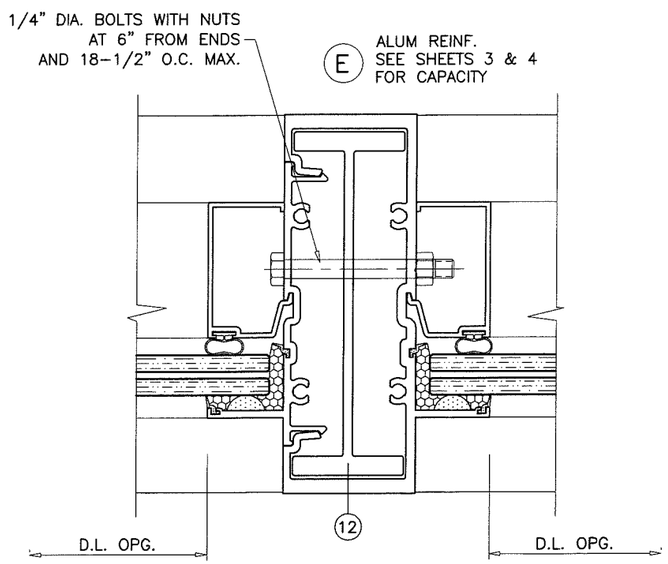

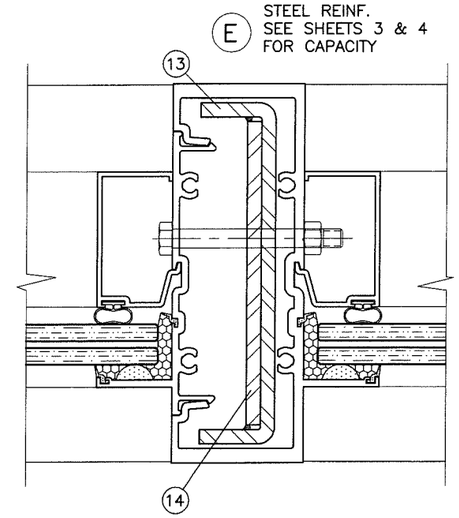

PRODUCT REVISED
as complying with the Florida
Building Code
Acceptance No 18-0319.10
Expiration Date April 3, 2023
By Manuel Perez
Miami Dade Product Control

JAWAD AHMAD
LICENSE
No. 70592
Jul 1,2018
STATE OF
FLORIDA
PROFESSIONAL ENGINEER

AL-FAROOQ CORPORATION
ENGINEERS & PRODUCT DEVELOPMENT
9360 SUNSET DRIVE, SUITE 220
MIAMI, FLORIDA 33173 (C.A.N. 3538)
TEL. (305) 264-8100 FAX. (305) 262-6978

STORE\W08-90SW

SERIES 8000 ALUM WINDOW WALL SYSTEM (L.M.I.)

SUNSHINE WINDOWS MANUFACTURING INC.
1785 WEST 33RD PLACE
HIALEAH, FL. 33012
TEL. (305) 364-9952 FAX. (305) 828-5118

revisions:

no	date	by	description
A	03.05.12		UPDATED TO 2010 FBC
B	01.18.16		UPDATED TO 2014 FBC
C	03.12.18		UPDATED TO 2017 FBC
D	06.13.18		REV. PER RER COMMENTS

date: 11-11-08
scale: 1/2" = 1"
dr. by: TARIQ
chk. by:

drawing no.
W08-90

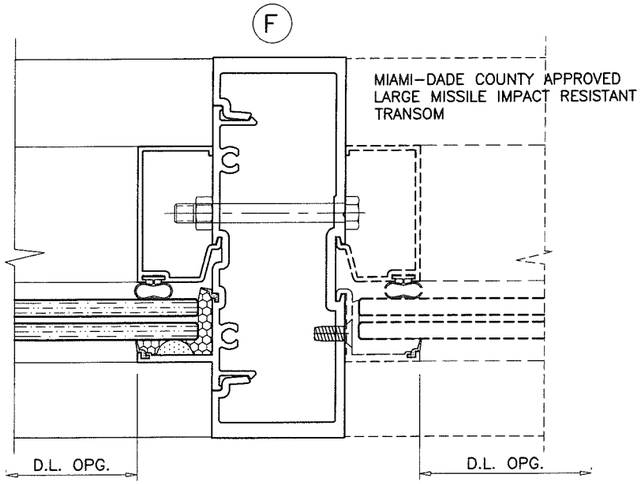

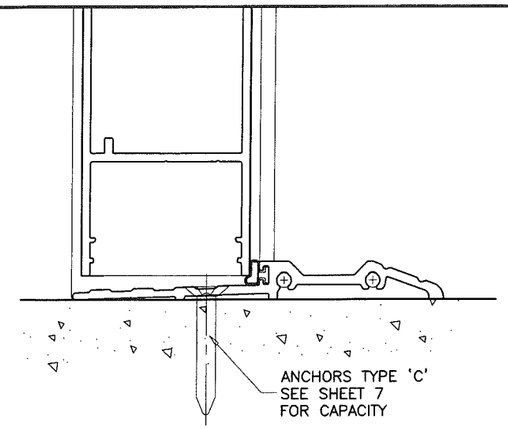

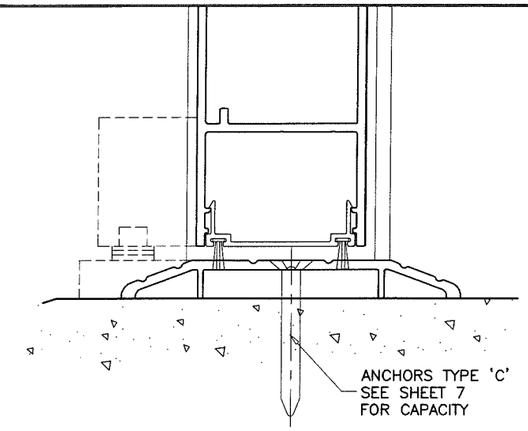

SEE SEPARATE NOA FOR DESIGN LOAD CAPACITY OF DOORS AND DOOR ANCHORS.

LOWER VALUES FROM DOORS NOA OR STOREFRONT SYSTEM CAPACITY CHARTS WILL APPLY TO ENTIRE SYSTEM.

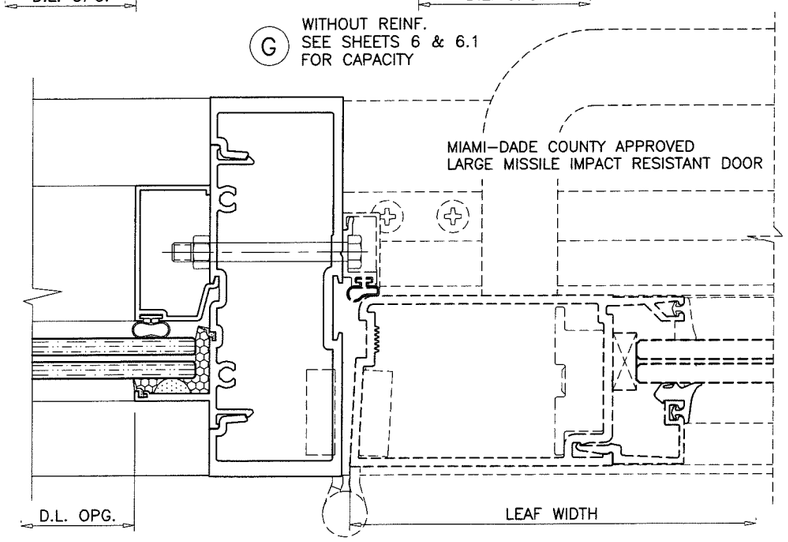

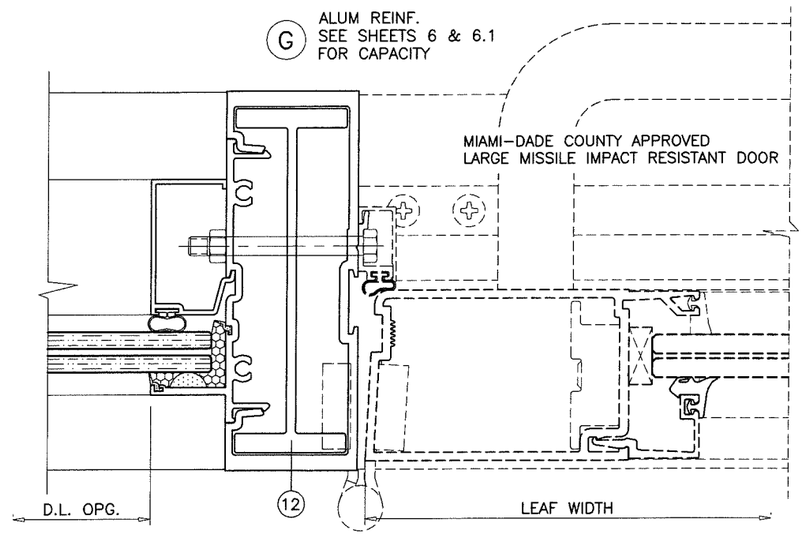

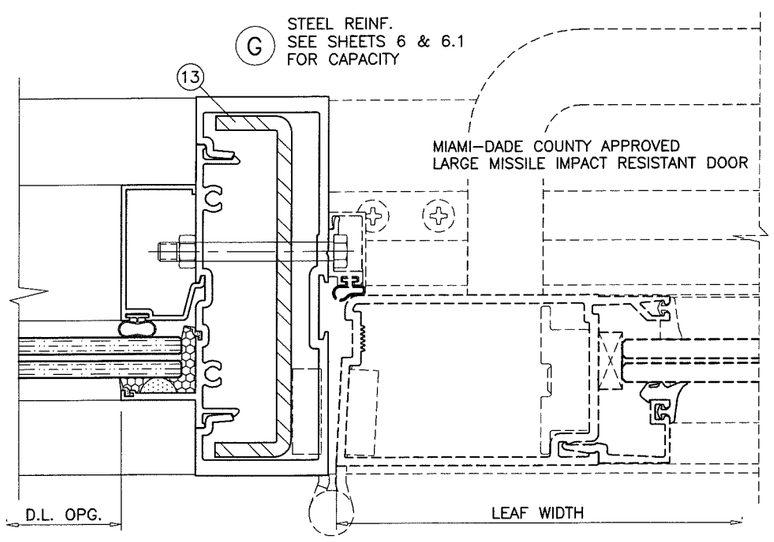

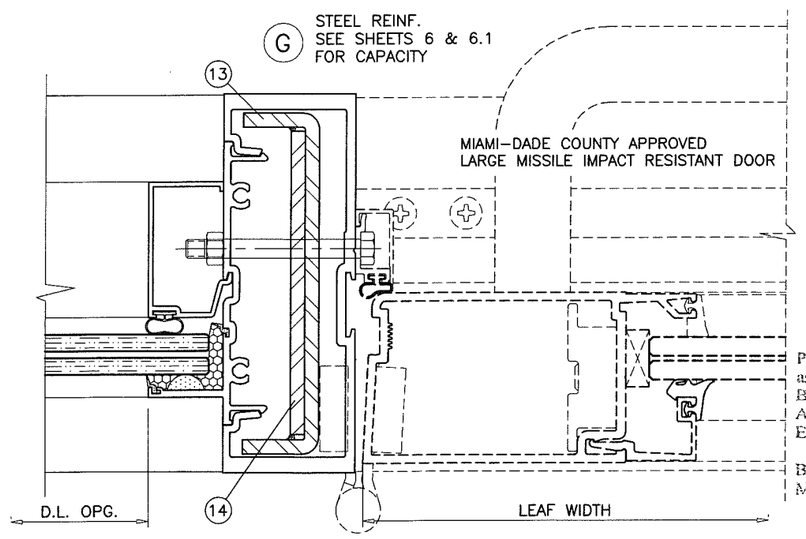

PRODUCT REVISED
as complying with the Florida
Building Code
Acceptance No 18-0319.10
Expiration Date April 3, 2023
By Manuel Perez
Miami-Dade Product Control

JAWAD AHMAD
LICENSE
No. 70592
Jul 1, 2018
STATE OF FLORIDA
PROFESSIONAL ENGINEER

AL-FAROOQ CORPORATION
ENGINEERS & PRODUCT DEVELOPMENT
9360 SUNSET DRIVE, SUITE 220
MIAMI, FLORIDA 33173 (C.A.N. 3538)
TEL. (305) 264-8100 FAX. (305) 262-6978
STORE\W08-90SW

SERIES 8000 ALUM WINDOW WALL SYSTEM (L.M.I.)

SUNSHINE WINDOWS MANUFACTURING INC.
1785 WEST 33RD PLACE
HIALEAH, FL. 33012
TEL. (305) 364-9952 FAX. (305) 828-5118

revisions:

no	date	by	description
A	03.05.12		NO CHANGE THIS SHEET
B	01.18.16		UPDATED TO 2014 FBC
C	03.12.18		UPDATED TO 2017 FBC
D	06.13.18		REV. PER RER COMMENTS

date: 11-11-08
scale: 1/2" = 1"
dr. by: TARIQ
chk. by:

drawing no.
W08-90

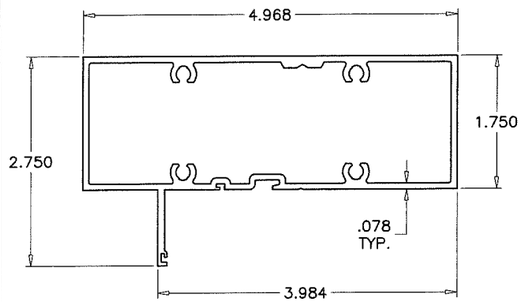

1 HOLLOW FRAME HEAD/SILL

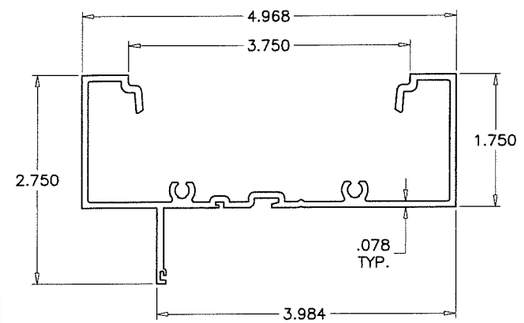

1A OPEN BACK FRAME HEAD/SILL

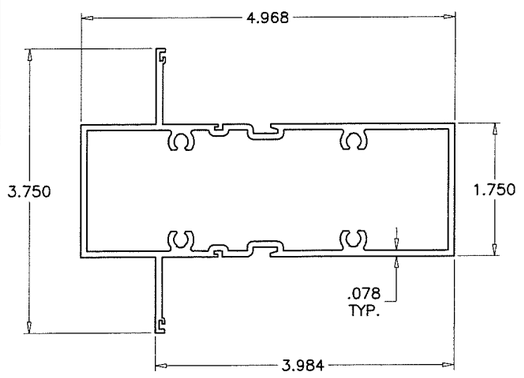

2 INTERMEDIATE HORIZONTAL

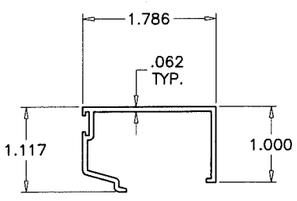

4 GLASS STOP

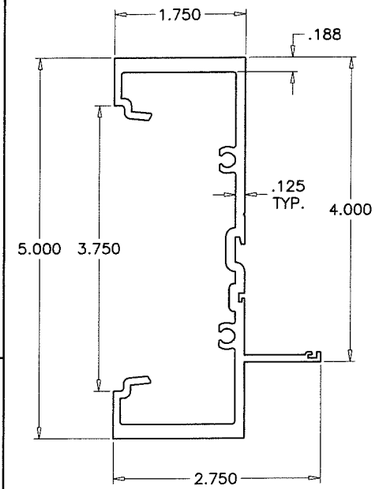

3 FRAME JAMB/MULLION

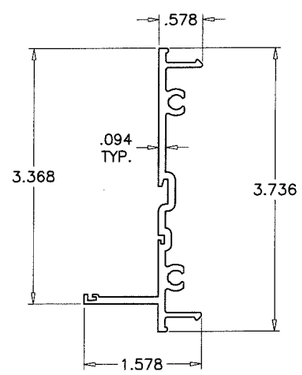

5 MULLION SNAP-IN MATE

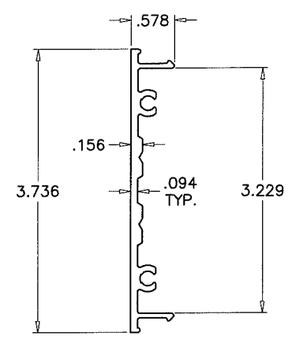

6 SHEAR CLIP

ITEM NO.	PART NUMBER	QUANTITY	DESCRIPTION	MATERIAL	MANF./SUPPLIER/REMARKS
1	ES8005	AS REQD.	HOLLOW FRAME HEAD/SILL	6005-T5	–
1A	ES8007	AS REQD.	OPEN BACK FRAME HEAD/SILL	6063-T6	–
2	ES8004	AS REQD.	INTERMEDIATE HORIZONTAL	6063-T6	–
3	ES8001	AS REQD.	FRAME JAMB/MULLION	6005-T5	–
3A	–	AS REQD.	DOOR MULLION	6005-T5	–
4	ES8006	AS REQD.	GLASS STOP	6063-T5	–
5	ES8002	AS REQD.	MULLION SNAP-IN MATE	6005-T5	–
6	ES8003	AS REQD.	SHEAR CLIP	6005-T5	–
7	–	AS REQD.	INTERIOR BULB GASKET	VINYL	–
8	ES8009	AS REQD.	SILICONE STOP	VINYL	–
8A	ES-8011A	AS REQD.	1/4" BUTTON BUMPER SPACER	SILICONE	DUROMETER 85±5 SHORE A
9	–	–	–	–	–
10	–	2/ LITE	3/16" X 1/2" X 2" LONG SETTING BLOCK, AT 1/4" POINTS	EPDM	DUROMETER 85±5 SHORE A
11	#12 X 1-1/2"	4/ CORNER	ASSEMBLY SCREWS PHSMS	STEEL	–
12	–	AS REQD.	MULLION STIFFENER	6005-T5	–
13	–	AS REQD.	MULLION REINFORCING CHANNEL	STEEL	–
14	–	AS REQD.	MULLION REINFORCING BAR	STEEL	–

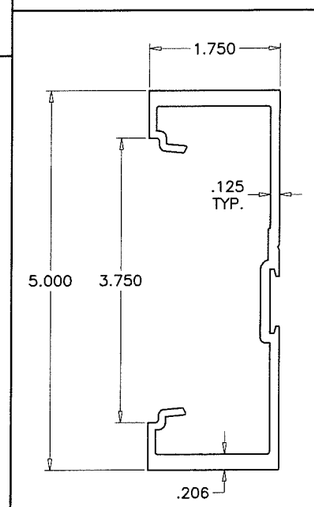

3A DOOR MULLION

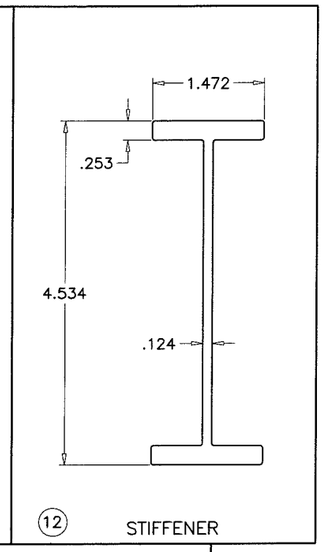

12 STIFFENER

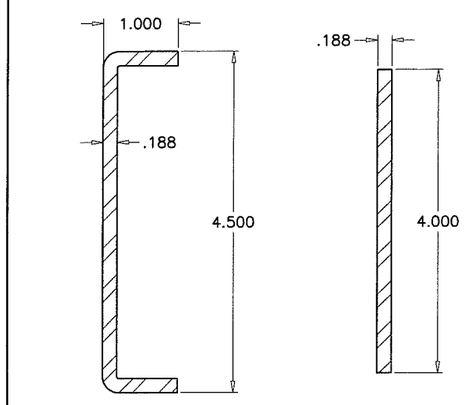

13 STEEL REINFORCING
36 KSI MIN.

14

PRODUCT REVISED
as complying with the Florida
Building Code
Acceptance No 18-0319.10
Expiration Date April 3, 2023
By Manuel Inez
Miami Dade Product Control

JAVAD AHMAD
LICENSE
No. 70592
Jul 1,2018
STATE OF FLORIDA
PROFESSIONAL ENGINEER

AL-FAROOQ CORPORATION
ENGINEERS & PRODUCT DEVELOPMENT
9360 SUNSET DRIVE, SUITE 220
MIAMI, FLORIDA 33173 (C.A.N. 3538)
TEL. (305) 264-8100 FAX. (305) 262-6978

STORE\W08-90SW

SERIES 8000 ALUM WINDOW WALL SYSTEM (L.M.I.)

SUNSHINE WINDOWS MANUFACTURING INC.
1785 WEST 33RD PLACE
HIALEAH, FL. 33012
TEL. (305) 828-5118 FAX. (305) 364-9952

revisions:

no	date	by	description
A	03.05.12		UPDATED TO 2010 FBC
B	01.18.16		UPDATED TO 2014 FBC
C	03.12.18		UPDATED TO 2017 FBC
D	06.13.18		REV. PER RER COMMENTS

date: 11-11-08
scale: 1/2" = 1"
dr. by: TARIQ
chk. by:

drawing no.
W08-90

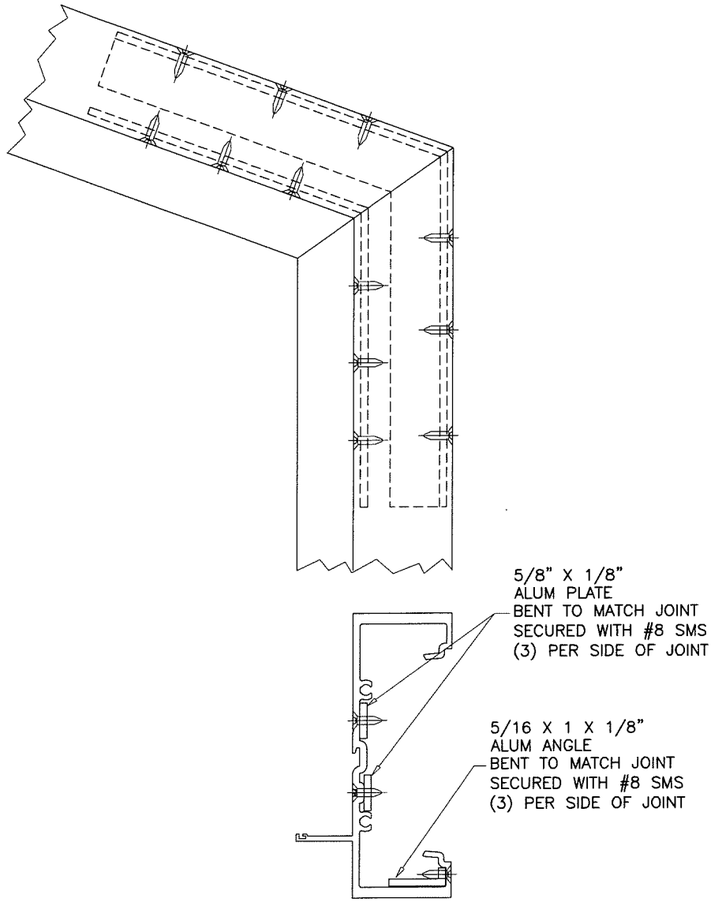

CIRCULAR OR ANGLED CORNERS

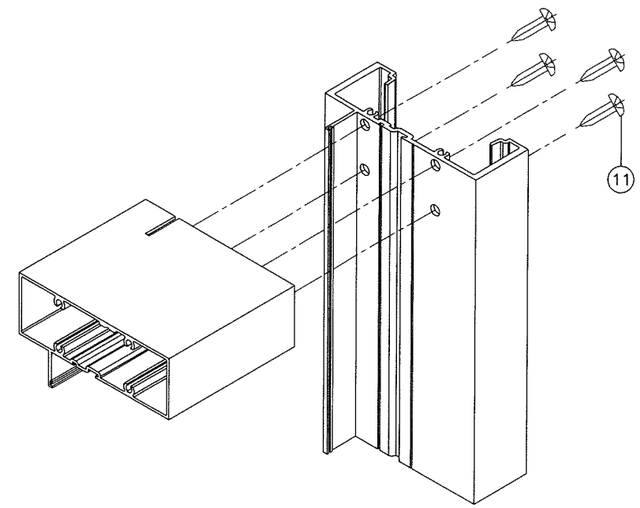

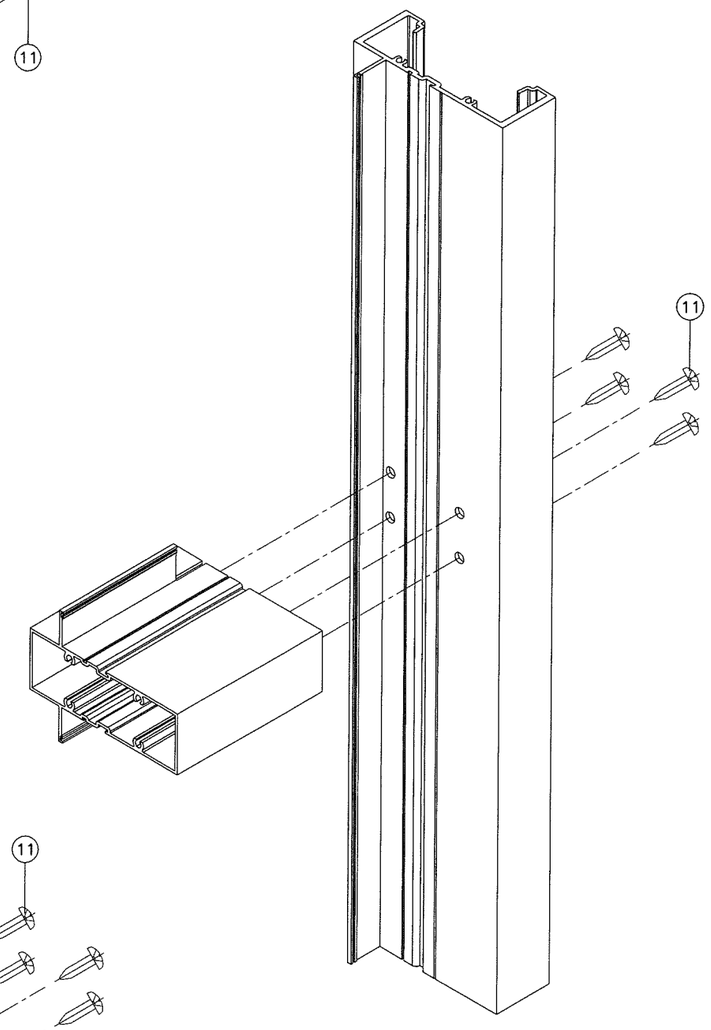

HORIZONTAL CORNER

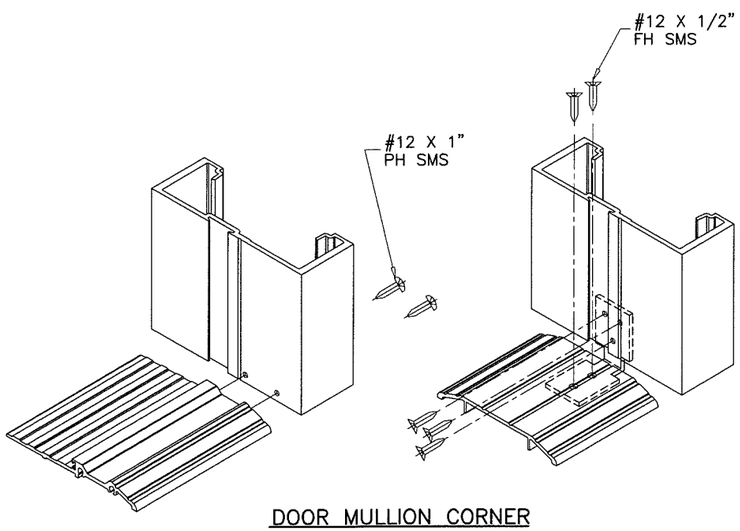

DOOR MULLION CORNER

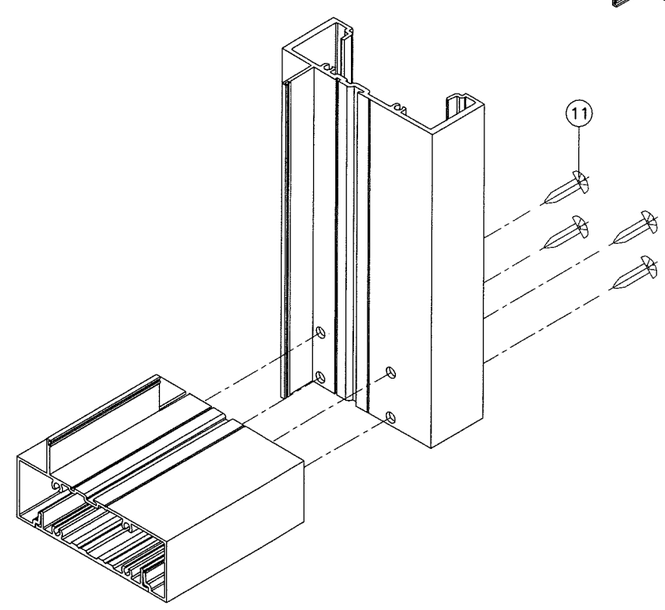

RECT. OR SQUARE CORNERS

PRODUCT REVISED
as complying with the Florida
Building Code
Acceptance No 18-0319.10
Expiration Date April 3, 2023
By Manuel Perez
Miami Dade Product Control

JAWAD AHMAD
LICENSE
No. 70592
Jul 1,2018
STATE OF FLORIDA
PROFESSIONAL ENGINEER

AL-FAROOQ CORPORATION
ENGINEERS & PROJECT DEVELOPMENT
9360 SUNSET DRIVE, SUITE 220
MIAMI, FLORIDA 33173 (C.A.N. 3538)
TEL. (305) 264-8100 FAX. (305) 262-6978

STORE\W08-90SW

SERIES 8000 ALUM WINDOW WALL SYSTEM (L.M.I.)

SUNSHINE WINDOWS MANUFACTURING INC.
1785 WEST 33RD PLACE
HIALEAH, FL. 33012
TEL. (305) 364-9952 FAX. (305) 828-5118

revisions:

no	date	by	description
A	03.05.12		NO CHANGE THIS SHEET
B	01.18.16		NO CHANGE THIS SHEET
C	03.12.18		UPDATED TO 2017 FBC
D	06.13.18		NO CHANGE THIS SHEET

date: 11-11-08
scale: –
dr. by: TARIQ
chk. by:

drawing no.
W08-90

sheet 12 of 12