MIAMI-DADE COUNTY
DEPARTMENT OF REGULATORY AND ECONOMIC RESOURCES (RER)
BOARD AND CODE ADMINISTRATION DIVISION

MIAMI-DADE COUNTY
PRODUCT CONTROL SECTION
11805 SW 26 Street, Room 208
T (786) 315-2590 F (786) 315-2599
www.miamidade.gov/economy

NOTICE OF ACCEPTANCE (NOA)

Titan Glass & Aluminum, LLC
450 West 27 Street
Hialeah, FL 33010

SCOPE:

This NOA is being issued under the applicable rules and regulations governing the use of construction materials. The documentation submitted has been reviewed and accepted by Miami-Dade County RER - Product Control Section to be used in Miami-Dade County and other areas where allowed by the Authority Having Jurisdiction (AHJ).

This NOA shall not be valid after the expiration date stated below. The Miami-Dade County Product Control Section (In Miami-Dade County) and/ or the AHJ (in areas other than Miami-Dade County) reserve the right to have this product or material tested for quality assurance purposes. If this product or material fails to perform in the accepted manner, the manufacturer will incur the expense of such testing and the AHJ may immediately revoke, modify, or suspend the use of such product or material within their jurisdiction. RER reserves the right to revoke this acceptance, if it is determined by Miami-Dade County Product Control Section that this product or material fails to meet the requirements of the applicable building code.

This product is approved as described herein, and has been designed to comply with the Florida Building Code, including the High Velocity Hurricane Zone.-

DESCRIPTION: Series "TSD-5000 Dry-Glazed" Aluminum Sliding Glass Door - L.M.I.

APPROVAL DOCUMENT: Drawing No. **W12-62**, titled "Series 'TSD-5000' Alum. Sliding Glass Door (L.M.I.)", sheets 1 through 8 of 8, dated 11/21/12 with revision **C** dated 03/07/18, prepared by Al-Farooq Corporation, signed and sealed by Javad Ahmad, P.E., bearing the Miami-Dade County Product Control Revision stamp with the Notice of Acceptance number and expiration date by the Miami-Dade County Product Control Section.

MISSILE IMPACT RATING: Large and Small Missile Impact Resistant

LABELING: Each unit shall bear a permanent label with the manufacturer's name or logo, city, state, series, and following statement: "Miami-Dade County Product Control Approved", unless otherwise noted herein.

RENEWAL of this NOA shall be considered after a renewal application has been filed and there has been no change in the applicable building code negatively affecting the performance of this product.

TERMINATION of this NOA will occur after the expiration date or if there has been a revision or change in the materials, use, and/ or manufacture of the product or process. Misuse of this NOA as an endorsement of any product, for sales, advertising or any other purposes shall automatically terminate this NOA. Failure to comply with any section of this NOA shall be cause for termination and removal of NOA.

ADVERTISEMENT: The NOA number preceded by the words Miami-Dade County, Florida, and followed by the expiration date may be displayed in advertising literature. If any portion of the NOA is displayed, then it shall be done in its entirety.

INSPECTION: A copy of this entire NOA shall be provided to the user by the manufacturer or its distributors and shall be available for inspection at the job site at the request of the Building Official.

This NOA **revises and renews NOA No. 14-0909.14** and consists of this page 1 and evidence pages E-1, E-2, E-3, and E-4, as well as approval document mentioned above.

The submitted documentation was reviewed by **Manuel Perez, P.E.**

MIAMI-DADE COUNTY APPROVED

4/12/18

Titan Glass & Aluminum, LLC

NOTICE OF ACCEPTANCE: EVIDENCE SUBMITTED

1. EVIDENCE SUBMITTED UNDER PREVIOUS NOA's

A. DRAWINGS

1. Manufacturer's die drawings and sections.
(Submitted under NOA No. 12-1213.02 and 14-0909.14)

2. Drawing No. **W12-60**, titled "Series 'TSD-5000' Alum. Sliding Glass Door (L.M.I.)", sheets 1 through 8 of 8, dated 11/21/12 with revision **B** dated 07/30/14, prepared by Al-Farooq Corporation, signed and sealed by Javad Ahmad, P.E.

B. TESTS

1. Test reports on: 1) Large Missile Impact Test, per FBC, TAS 201-94
2) Cyclic Wind Pressure Loading per PA 203-94
along with marked-up drawings and installation diagram of an aluminum sliding glass door 2-Track System, prepared by Fenestration Testing Laboratory, Inc., Test Report No. **FTL-7837**, dated 08/01/14, signed and sealed by Idalmis Ortega, P.E.

2. Test reports on: 1) Air Infiltration Test, per FBC, TAS 202-94
2) Uniform Static Air Pressure Test, Loading per FBC, TAS 202-94
3) Water Resistance Test, per FBC, TAS 202-94
4) Small Missile Impact Test per FBC, TAS 201-94
5) Large Missile Impact Test per FBC, TAS 201-94
6) Cyclic Wind Pressure Loading per FBC, TAS 203-94
7) Forced Entry and Assembly Test, Type C, Grade 10, per ASTM F 842, per FBC 2411.3.2.1 and TAS 202-94
along with marked-up drawings and installation diagram of an aluminum sliding glass door 2-Track System, prepared by Fenestration Testing Laboratory, Inc., Test Report No. **FTL-7456**, dated 09/13/13, signed and sealed by Marlin D. Brinson, P.E.

3. Test reports on: 1) Air Infiltration Test, per FBC, TAS 202-94
2) Uniform Static Air Pressure Test, Loading per PA 202-94
3) Water Resistance Test, per PA 202-94
4) Forced Entry Test, per FBC 2411.3.2.1, and TAS 202-94
along with marked-up drawings and installation diagram of sliding door 2-Track system, prepared by Hurricane Engineering Testing, Inc., Test Report No. **HETI-12-4066**, dated 11/14/12, signed and sealed by Rafael E. Droz-Seda, P.E.
(Submitted under NOA No. 12-1213.02)

Manuel Perez

Manuel Perez, P.E.
Product Control Examiner
NOA No. 18-0322.04
Expiration Date: March 14, 2023
Approval Date: April 19, 2018

NOTICE OF ACCEPTANCE: EVIDENCE SUBMITTED

B. TESTS (CONTINUED)

4. Test reports on: 1) Large Missile Impact Test per FBC, TAS 201-94
2) Cyclic Wind Pressure Loading per PA 203-94
along with marked-up drawings and installation diagram of sliding door 2-Track System, prepared by Hurricane Engineering Testing, Inc., Test Reports No. **HETI-12-4067** and **HETI-12-4069**, both dated 11/14/12, signed and sealed by Rafael E. Droz-Seda, P.E.
(Submitted under NOA No. 12-1213.02)

C. CALCULATIONS

1. Anchor verification calculations and structural analysis, complying with **FBC 5th Edition (2014)**, prepared by Al-Farooq Corporation, dated 08/11/14, signed and sealed by Javad Ahmad, P.E.
(Submitted under NOA No. 14-0909.14)

2. Glazing complies with **ASTM E1300-04/ 09** and with DCA 05-DEC-219 Florida Building Commission Declaratory Statement.

D. QUALITY ASSURANCE

1. Miami-Dade Department of Regulatory and Economic Resources (RER).

E. MATERIAL CERTIFICATIONS

1. Notice of Acceptance No. **11-0624.02** issued to **E.I. DuPont DeNemours & Co.**, Inc. for their "**DuPont SentryGlas® Interlayer**" dated 08/25/11, expiring on 01/14/17.

2. TREMCO Part **EPDM Rubber Extrusions** complying with ASTM C864 Specification for Dense Elastomeric Compression Seal Gaskets Option II exceptions, ASTM D 2240 Durometer 85 Hardness Shore "A", ASTM D412 Standard Test Methods for Vulcanized Rubber and Thermoplastic Elastomers-Tension of 1900 PSI, ASTM D395B Test Methods for Rubber Property-Compression Set for 22 HRS 212°F 30%, ASTM D 624 Test Method for Tear Strength of Conventional Vulcanized Rubber and Thermoplastic Elastomers of 158 lb./ in., ASTM D 1149 Standard Test Methods for Rubber Deterioration-Cracking in an Ozone Controlled Environment 2089 ksf, 100hrs @104°F, 20% Elongation-"No Cracks" and ASTM D 746 Standard Test Method for Brittleness Temperature @ -40°F of Plastics and Elastomers by Impact Flame Propagation, Option II="No Limits-Passed".

Manuel Perez, P.E.
Product Control Examiner
NOA No. 18-0322.04
Expiration Date: March 14, 2023
Approval Date: April 19, 2018

NOTICE OF ACCEPTANCE: EVIDENCE SUBMITTED

F. STATEMENTS

1. Statement letter of no financial interest, conformance and complying with **FBC 5th Edition (2014)**, issued by Al-Farooq Corporation, dated 04/24/14, signed and sealed by Javad Ahmad, P.E.
2. Laboratory compliance letter for Test Report No. **FTL-7837**, issued by Fenestration Testing Laboratory, Inc., dated 08/01/14, signed and sealed by Idalmis Ortega, P.E.
3. Proposal issued by the Product Control Section, dated 02/03/14, signed by Jaime D. Gascon, P.E.
4. Laboratory compliance letter for Test Report No. **FTL-7456**, issued by Fenestration Testing Laboratory, Inc., dated 09/13/13, signed and sealed by Marlin D. Brinson, P.E.
5. Department of State Certification of **TITAN GLASS & ALUMINUM, LLC** as a limited liability company, active and organized under the laws of the State of Florida, dated 06/07/13 and signed by T. Hampton, Secretary of State.
   (Submitted under NOA No. 14-0909.14)
6. Laboratory compliance letters for Test Reports No. **HETI-12-4066**, **HETI-12-4067** and **HETI-12-4069**, issued by Hurricane Engineering Testing, Inc., all dated 11/14/12, signed and sealed by Rafael E. Droz-Seda, P.E.
   (Submitted under NOA No. 12-1213.02)
7. Proposal issued by the Product Control Section, dated 08/09/12, signed by Jaime D. Gascon, P.E.
   (Submitted under NOA No. 12-1213.02)

G. OTHERS

1. Notice of Acceptance No. **12-1213.02**, issued to Titan Glass & Aluminum, LLC for their Series "TSD-5000" Aluminum Sliding Glass Door – Dry-Glazed – L.M.I., approved on 03/14/13 and expiring on 03/14/18.

Manuel Perez

Manuel Perez, P.E.
Product Control Examiner
NOA No. 18-0322.04
Expiration Date: March 14, 2023
Approval Date: April 19, 2018

NOTICE OF ACCEPTANCE: EVIDENCE SUBMITTED

2. NEW EVIDENCE SUBMITTED

A. DRAWINGS

1. Drawing No. **W12-60**, titled "Series 'TSD-5000' Alum. Sliding Glass Door (L.M.I.)", sheets 1 through 8 of 8, dated 11/21/12 with revision **C** dated 03/07/18, prepared by Al-Farooq Corporation, signed and sealed by Javad Ahmad, P.E.

B. TESTS

1. None

C. CALCULATIONS

1. Anchor verification calculations and structural analysis, complying with **FBC 6th Edition (2017)**, dated 03/05/18, prepared by Al-Farooq Corporation, signed and sealed by Javad Ahmad, P.E.

D. QUALITY ASSURANCE

1. Miami-Dade Department of Regulatory and Economic Resources (RER)

E. MATERIAL CERTIFICATIONS

1. Notice of Acceptance No. **17-0808.02** issued to **Kuraray America, Inc.** for their **"SentryGlas® (Clear and White) Glass Interlayers"** dated 12/28/17, expiring on 07/04/23.

F. STATEMENTS

1. Statement letter of conformance, complying with **FBC 6th Edition (2017),** and of no financial interest, dated 03/05/18, issued by Al-Farooq Corporation, signed and sealed by Javad Ahmad, P.E.

G. OTHERS

1. Notice of Acceptance No. **14-0909.14**, issued to Titan Glass & Aluminum, LLC for their Series **"TSD-5000" Aluminum Sliding Glass Door – Dry-Glazed – L.M.I.**, approved on 10/09/14 and expiring on 03/14/18.

Manuel Perez, P.E.
Product Control Examiner
NOA No. 18-0322.04
Expiration Date: March 14, 2023
Approval Date: April 19, 2018

DESIGN LOAD CAPACITY – PSF			
AVERAGE PANEL WIDTH INCHES	DOOR HEIGHT INCHES	9/16" LAM. GLASS	
		EXT.(+)	INT.(–)
36	82–1/4	100.0	135.0
42		100.0	135.0
48		100.0	135.0
54		88.9	120.0
60		80.0	108.0
36	96	100.0	135.0
42		100.0	135.0
48		100.0	135.0
54		88.9	120.0
60		80.0	108.0
36	102	100.0	135.0
42		100.0	135.0
48		100.0	135.0
54		88.9	120.0
36	108	100.0	135.0
42		100.0	135.0
48		100.0	135.0
36	114	100.0	135.0
42		100.0	135.0
48		100.0	135.0
36	120	100.0	135.0
42		100.0	135.0
48		100.0	135.0

$$\text{AVERAGE PANEL WIDTH} = \frac{\text{DOOR WIDTH}}{\text{NUMBER OF PANELS}}$$

ALL EXTERIOR(+) LOADS SHOWN IN CHARTS ABOVE ARE FOR DOORS WITH 3–3/4" SILL HEIGHTS.
FOR 2–5/8" SILL HEIGHT LIMIT EXT.(+) LOADS TO 60.0 PSF SEE SHEET 5 FOR DETAILS

DOOR HEIGHT AND WIDTH SIZE MUST COMPLY WITH EGRESS REQUIREMENTS PER FBC AS NEEDED.

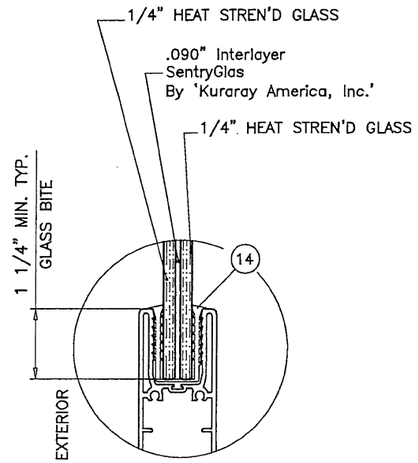

GLAZING DETAIL

9/16" OVERALL LAMINATED GLASS

SERIES 'TSD–5000' ALUMINUM SLIDING GLASS DOOR

DESIGN LOAD RATING FOR DOORS TO BE AS PER CHART SHOWN ABOVE.

THIS PRODUCT HAS BEEN DESIGNED AND TESTED TO COMPLY WITH THE REQUIREMENTS OF THE 2017 (6TH EDITION) FLORIDA BUILDING CODE INCLUDING HIGH VELOCITY HURRICANE ZONE (HVHZ).

1BY OR 2BY WOOD BUCKS & BUCK FASTENERS BY OTHERS, MUST BE DESIGNED AND INSTALLED ADEQUATELY TO TRANSFER APPLIED PRODUCT LOADS TO THE BUILDING STRUCTURE.

ANCHORS SHALL BE CORROSION RESISTANT, SPACED AS SHOWN ON DETAILS AND INSTALLED PER MANUF'S INSTRUCTIONS. SPECIFIED EMBEDMENT TO BASE MATERIAL SHALL BE BEYOND WALL DRESSING OR STUCCO.

A LOAD DURATION INCREASE IS USED IN DESIGN OF ANCHORS INTO WOOD ONLY.

ALL SHIMS TO BE HIGH IMPACT, NON–METALLIC AND NON–COMPRESSIBLE.

MATERIALS INCLUDING BUT NOT LIMITED TO STEEL/METAL SCREWS, THAT COME INTO CONTACT WITH OTHER DISSIMILAR MATERIALS SHALL MEET THE REQUIREMENTS OF THE 2017 FLORIDA BLDG. CODE & ADOPTED STANDARDS.

THIS PRODUCT APPROVAL IS GENERIC AND DOES NOT PROVIDE INFORMATION FOR A SITE SPECIFIC PROJECT, i.e. LIFE SAFETY OF THIS PRODUCT, ADEQUACY OF STRUCTURE RECEIVING THIS PRODUCT AND SEALING AROUND OPENING FOR WATER INFILTRATION RESISTANCE ETC.
CONDITIONS NOT SHOWN IN THIS DRAWING ARE TO BE ANALYZED SEPARATELY, AND TO BE REVIEWED BY BUILDING OFFICIAL.

LAMINATED GLASS
LARGE MISSILE IMPACT
DRY GLAZED

MAR 19 2018

PRODUCT REVISED
as complying with the Florida Building Code
NOA–No. 18–0322.04
Expiration Date 03/14/2023
By Manuel Perez
Miami–Dade Product Control

JAVAD AHMAD
LICENSE
No. 70592
STATE OF FLORIDA
PROFESSIONAL ENGINEER

NOTE:
GLASS CAPACITIES ON THIS SHEET ARE BASED ON ASTM E1300–09 (3 SEC. GUSTS) AND FLORIDA BUILDING COMMISSION DECLARATORY STATEMENT DCA05–DEC–219

THESE DOORS ARE RATED FOR LARGE & SMALL MISSILE IMPACT. SHUTTERS ARE NOT REQUIRED.

AL-FAROOQ CORPORATION
ENGINEERS & PRODUCT DEVELOPMENT
9360 SUNSET DRIVE, SUITE 220
MIAMI, FLORIDA 33173 (C.A.N. 3538)
TEL. (305) 264-8100 FAX. (305) 262-6978

COMP–ANL\W12–60TGA

SERIES 'TSD–5000' ALUM SLIDING GLASS DOOR (L.M.I.)

Titan Glass & Aluminum, LLC.
450 West 27 Street
Hialeah, FL. 33010
Tel. (305) 888–0911 Fax. (305) 671–3840

revisions:

no	date	by	description
A	02.28.13		REV. PER RER COMMENTS
B	07.30.14		GENERAL REVISION
C	03.07.18		UPDATED TO 2017 FBC

date: 11–21–12
scale: 3/8" = 1"
dr. by: TARIQ
chk. by:

drawing no.
W12–60

sheet 1 of 8

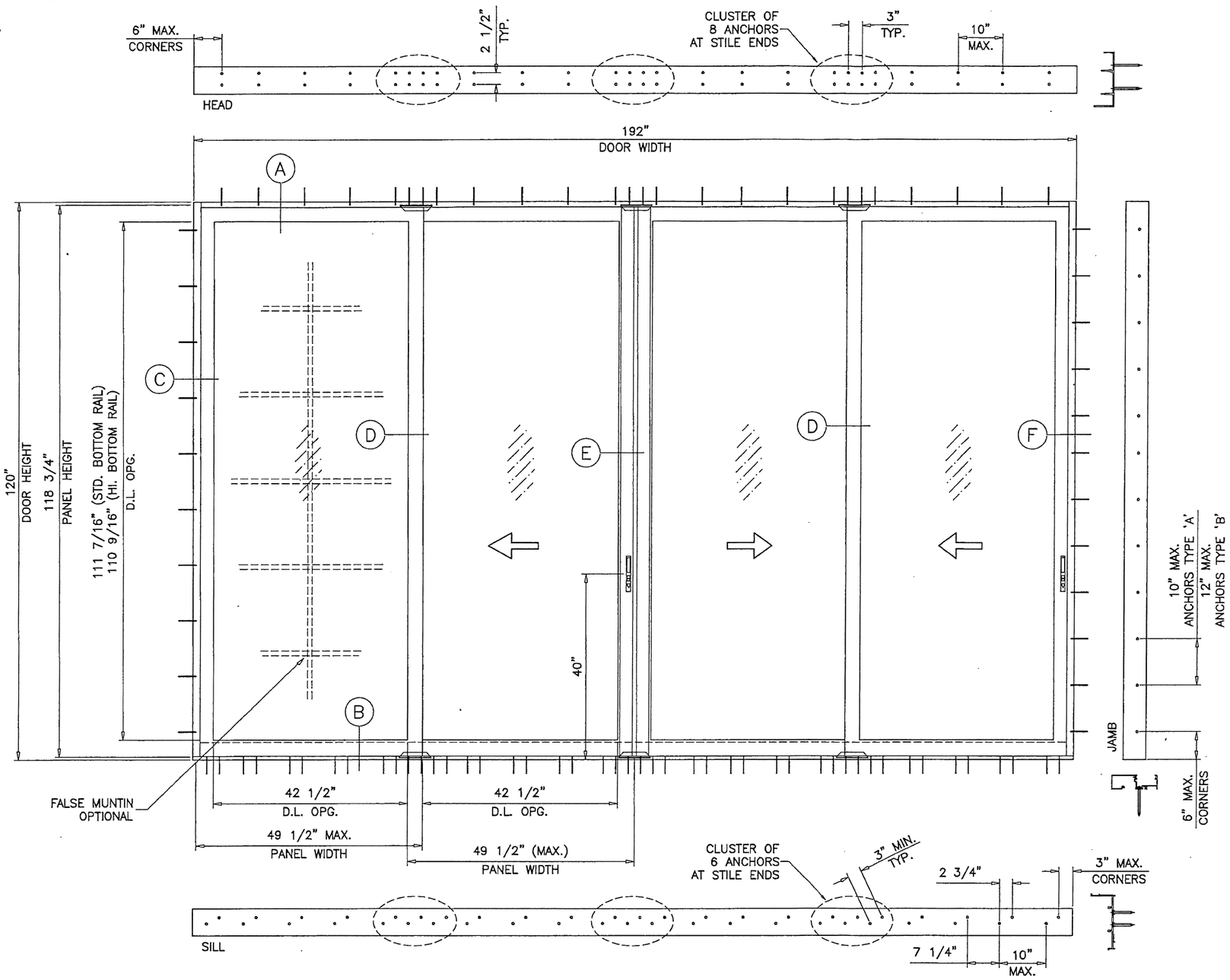

DAYLITE OPENINGS:
D.L.O. HEIGHT = PANEL HEIGHT – 7.312" (STD. BOTTOM RAIL)
D.L.O. HEIGHT = PANEL HEIGHT – 8.188" (HI. BOTTOM RAIL)
D.L.O. WIDTH = PANEL WIDTH – 7" (TYP. PANEL)
D.L.O. WIDTH = PANEL WIDTH – 8.250" (PANEL W/ FEMALE ASTRAGAL)
PANEL HEIGHT = DOOR HEIGHT – 1.187"

MAR 19 2018

PRODUCT REVISED
as complying with the Florida Building Code
NOA-No. 18-0322.04
Expiration Date 03/14/2023
By Manuel Perez
Miami-Dade Product Control

JAVAD AHMAD
LICENSE
No. 70592
STATE OF FLORIDA
PROFESSIONAL ENGINEER

AL-FAROOQ CORPORATION
ENGINEERS & PRODUCT DEVELOPMENT
9360 SUNSET DRIVE, SUITE 220
MIAMI, FLORIDA 33173 (C.A.N. 3538)
TEL. (305) 264-8100 FAX. (305) 262-6978

COMP-ANL\W12-60TGA

SERIES 'TSD-5000' ALUM SLIDING GLASS DOOR (L.M.I.)

Titan Glass & Aluminum, LLC.
450 West 27 Street
Hialeah, FL. 33010
Tel. (305) 888-0911 Fax. (305) 671-3840

revisions:

no	date	by	description
A	02.28.13		NO CHANGE THIS SHEET
B	07.30.14		GENERAL REVISION
C	03.07.18		UPDATED TO 2017 FBC

date: 11-21-12
scale: 1/2"=1'-0"
dr. by: TARIQ
chk. by:

drawing no.
W12-60

sheet 2 of 8

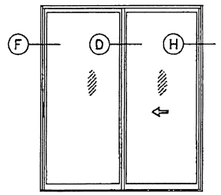

OX (SHOWN)
XO

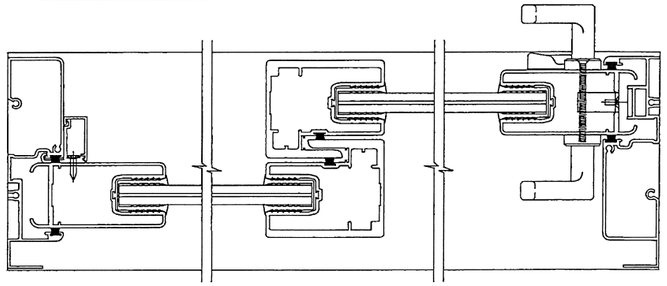

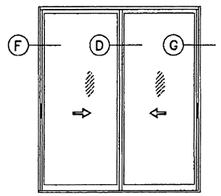

XX (SHOWN)

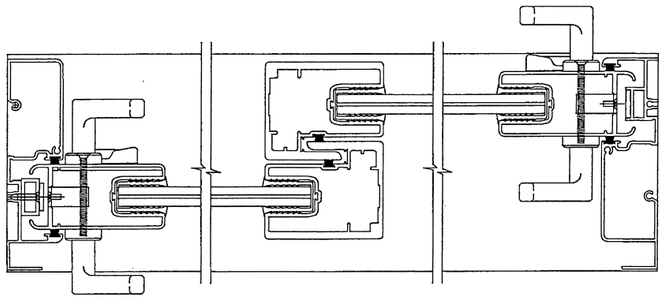

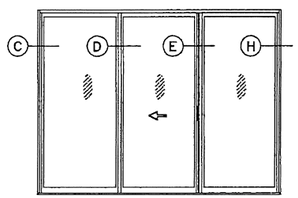

OXO (SHOWN)

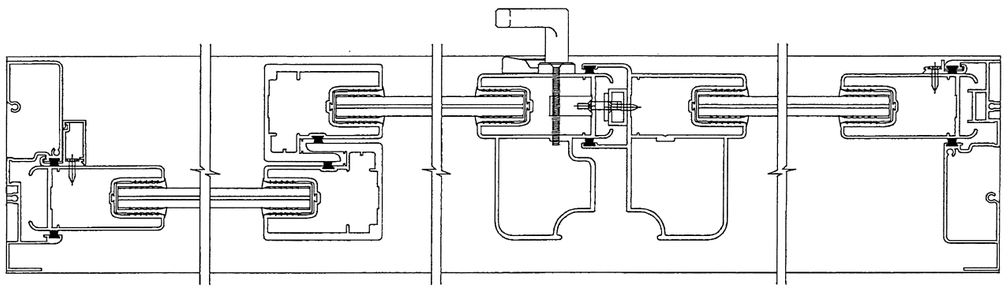

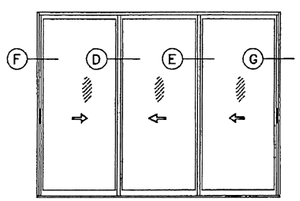

XXX (SHOWN)

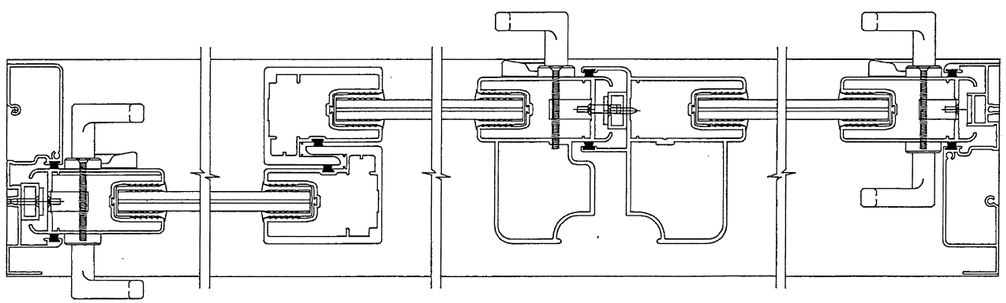

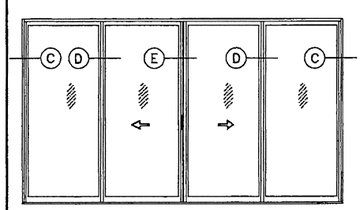

OXXO (SHOWN)
OXXX

APPROVED CONFIGURATIONS

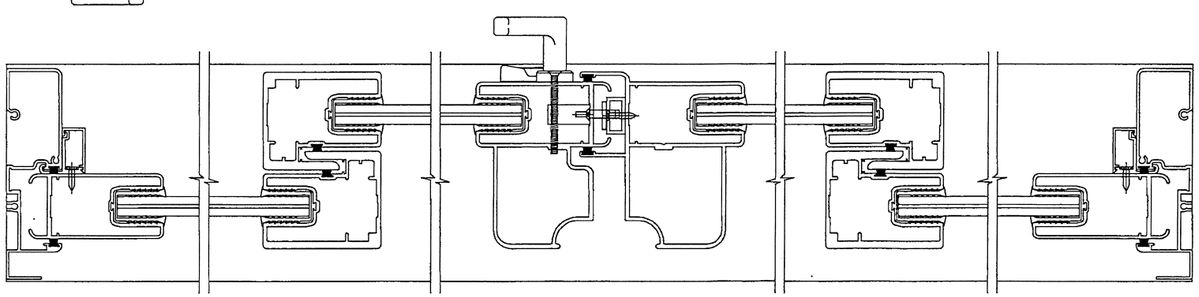

NOTE:
CONFIGURATIONS SHOWN FOR ILLUSTRATION PURPOSE ONLY
(SEE APPLICABLE ANCHOR INSTALLATIONS ON SHEET 6)

PRODUCT REVISED
as complying with the Florida Building Code
NOA-No. 18-0322.04
Expiration Date 03/14/2023
By Manuel Perez
Miami-Dade Product Control

MAR 19 2018

JAVAD AHMAD
LICENSE
No. 70592
STATE OF FLORIDA
PROFESSIONAL ENGINEER

AL-FAROOQ CORPORATION
ENGINEERS & PRODUCT DEVELOPMENT
9360 SUNSET DRIVE, SUITE 220
MIAMI, FLORIDA 33173 (C.A.N. 3538)
TEL. (305) 264-8100 FAX. (305) 262-6978

COMP-ANL\W12-60TGA

SERIES 'TSD-5000' ALUM SLIDING GLASS DOOR (L.M.I.)

Titan Glass & Aluminum, LLC.
450 West 27 Street
Hialeah, FL. 33010
Tel. (305) 888-0911 Fax. (305) 671-3840

revisions:

no	date	by	description
A	02.28.13		NO CHANGE THIS SHEET
B	07.30.14		GENERAL REVISION
C	03.07.18		UPDATED TO 2017 FBC

date: 11-21-12
scale: -
dr. by: TARIQ
chk. by:

drawing no.
W12-60

1BY OR 2BY WOOD BUCKS AND METAL STRUCTURE NOT BY TITAN GLASS MUST SUSTAIN LOADS IMPOSED BY GLAZING SYSTEM AND TRANSFER THEM TO THE BUILDING STRUCTURE.

TYPICAL ANCHORS: SEE ELEV. FOR SPACING

AT HEAD

TYPE 'A'– 1/4" DIA. ULTRACON BY 'ELCO' (Fu=177 KSI, Fy=155 KSI)
INTO 2BY WOOD BUCKS OR WOOD STRUCTURES
1–1/2" MIN. PENETRATION INTO WOOD

THRU 1BY BUCKS INTO CONCRETE
1–1/2" MIN. EMBED INTO CONCRETE

TYPE 'B'– 1/4" DIA. ULTRACON BY 'ELCO' (Fu=177 KSI, Fy=155 KSI)
DIRECTLY INTO CONCRETE
1–1/2" MIN. EMBED

TYPE 'C'– #14 SMS OR SELF DRILLING SCREWS (GRADE 2 CRS)
INTO MIAMI–DADE COUNTY APPROVED MULLIONS
OR
INTO METAL STRUCTURES
(3) THREADS MIN. TO EXTEND BEYOND METAL THICKNESS
ALUMINUM: 1/8" THK. MIN. (6063–T5 MIN.)
STEEL: 1/8" THK. MIN. (Fy = 36 KSI MIN.)
(STEEL IN CONTACT WITH ALUMINUM TO BE PLATED OR PAINTED)

AT SILL

TYPE 'B'– 1/4" DIA. ULTRACON BY 'ELCO' (Fu=177 KSI, Fy=155 KSI)
DIRECTLY INTO CONCRETE
1–1/2" MIN. EMBED

AT JAMBS

TYPE 'A'– 1/4" DIA. ULTRACON BY 'ELCO' (Fu=177 KSI, Fy=155 KSI)
INTO 2BY WOOD BUCKS OR WOOD STRUCTURES
1–1/2" MIN. PENETRATION INTO WOOD

THRU 1BY BUCKS INTO CONC. OR BLOCKS
1–1/4" MIN. EMBED INTO CONC. OR BLOCKS

TYPE 'B'– 1/4" DIA. ULTRACON BY 'ELCO' (Fu=177 KSI, Fy=155 KSI)
DIRECTLY INTO CONC. OR BLOCKS
1–1/4" MIN. EMBED INTO CONC. OR BLOCKS

TYPE 'C'– #14 SMS OR SELF DRILLING SCREWS (GRADE 5 CRS)
INTO MIAMI–DADE COUNTY APPROVED MULLIONS
OR
INTO METAL STRUCTURES
(3) THREADS MIN. TO EXTEND BEYOND METAL THICKNESS
ALUMINUM: 1/8" THK. MIN. (6063–T5 MIN.)
STEEL: 1/8" THK. MIN. (Fy = 36 KSI MIN.)
(STEEL IN CONTACT WITH ALUMINUM TO BE PLATED OR PAINTED)

ANCHOR EDGE DISTANCES
INTO CONCRETE AND BLOCKS = 2–1/2" MIN.
INTO WOOD STRUCTURE = 1" MIN.
INTO METAL STRUCTURE = 3/4" MIN.

WOOD AT HEAD OR JAMBS SG = 0.55 MIN.
CONCRETE AT HEAD, SILL OR JAMBS f'c = 3000 PSI MIN.
C–90 HOLLOW/FILLED BLOCK AT JAMBS f'm = 2000 PSI MIN.

ITEM #	PART #	QUANTITY	DESCRIPTION	MATERIAL	MANF./SUPPLIER/REMARKS
1	TGA101	1	FRAME HEAD	6005A–T5	–
2	TGA102	1	FRAME SILL	6005A–T5	–
3	TGA112	AS REQD.	SILL RISER	6063–T6	–
4A	TGA103	2	FRAME JAMB	6063–T6	–
4B	TGA115	2	OFFSET FRAME JAMB	6063–T6	–
5	TGA107	AS REQD.	RETAINING CLIP, 7" LONG	6005A–T5	@ MTG. STILES HEAD & SILL ENDS
6	TGA104	1/PANEL	PANEL TOP RAIL	6063–T6	–
7	TGA105	1/PANEL	PANEL STD. BOTTOM RAIL	6063–T6	–
7A	TGA141	1/PANEL	PANEL HI. BOTTOM RAIL	6063–T6	–
8	TGA110	AS REQD.	PANEL LOCK STILE	6063–T6	
9	TGA109	AS REQD.	PANEL INTERLOCK STILE	6005A–T5	–
10	TGA114	AS REQD.	PANEL FEMALE ASTRAGAL	6063–T6	
11	TGA113	AS REQD.	PANEL MALE ASTRAGAL	6063–T6	
12	–	2	JAMB FASTENER COVER	6063–T5	OPTIONAL (NOT SHOWN)
13	TGA111	3/FIX.PANEL	FIXED PANEL RETAINING CLIP, 2" LONG	6063–T5	SECURE W/1 #10 X 1–1/2" FH SMS
13A	TGA116	OPTIONAL	RETAINING CLIP COVER	6063–T5	OPTIONAL
14	TGA147	AS REQD.	GLAZING GASKET	SANTOPRENE	–
15	TGA125	2/ PANEL	PANEL TOP GUIDE (.62" X 1.40" X .370")	NYLON	–
16	TGA148	2/ FIX. PANEL	FIXED PANEL BOTTOM GUIDE (3" X .91" X .70")	NYLON	–
17		2/GUIDE	BOTTOM GUIDE INST. SCREWS	–	#10 x 3/4" FHSMS
18		AS REQD.	FRAME & PANEL ASSY. SCREWS	–	#10 x 1" PHSMS
19		2/CLIP	RETAINING CLIP SCREWS	–	#10–24 x 1/2 FH MS
20	2815 MULTI POINT	1/MOV. PANEL	MORTISE LOCK – MULTI POINT	–	AMESBURY
22		2/LOCK	LOCK INSTALLATION SCREWS	–	#6–32 x 1/2" FHSMS
23	2470 MULTI POINT	1/LOCK	LOCK KEEPER	–	–
24	1/2" X 1" X .093	1/LOCK	LOCK KEEPER – CUSTOM FILLER TUBE	6063–T5	–
25	#10 x 3/4" FH SMS	AS REQD.	KEEPER MOUNTING SCREWS STD.	–	AT 1–1/2" FROM ENDS & 23" O.C.
26	#10 x 3/4" PH SMS	AS REQD.	KEEPER MOUNTING SCREWS MULTI PT.	–	AT 1–1/2" FROM ENDS & 23" O.C.
27	APOLLO BY AMESBURY	1/LOCK	INTERIOR & EXTERIOR PULL	–	@ STD. LOCK STILE
28	APOLLO BY AMESBURY	2/MOV. PANEL	INTERIOR PULL	–	@ MALE ASTRAGAL STILE
29	TA–88	2/MOV. PANEL	PANEL ROLLER ASSY.	–	AMESBURY
30		2/ROLLER	ROLLER INSTALLATION SCREWS	–	#8 x 1/2 FHSMS
31	W21405NK	AS REQD.	TOP RAIL W/STRIP AT INTERLOCKS	–	FIN SEAL BY ULTRAFAB
32	W21305NK	AS REQD.	VERTICAL W/STRIP AT JAMBS & ASTRAGAL	–	FIN SEAL BY ULTRAFAB
33	Q267075K	AS REQD.	BOTT. RAIL W/STRIP SQUARE BACK	–	FIN SEAL SKIRTING BY ULTRAFAB
34		1/MOV. PANEL	3 1/4" X 5/8" X 1/2" HIGH, ADHESIVE BACK PAD	–	SILL/INTERLOCK LOCATION
35		1/MOV. PANEL	3 1/4" X 1 3/16" X 1/2" HIGH, ADHESIVE BACK PAD	–	SILL/INTERLOCK LOCATION
36		1/MOV. PANEL	3 1/4" X 1" X 1/2" HIGH, ADHESIVE BACK PAD	–	HEAD/INTERLOCK/ASTRAGAL LOCATION
37		1/MOV. PANEL	3 1/4" X 2 3/16" X 1/2" HIGH, ADHESIVE BACK PAD	–	HEAD/INTERLOCK/ASTRAGAL LOCATION

PRODUCT REVISED
as complying with the Florida Building Code
NOA-No. 18–0322.04
Expiration Date 03/14/2023
By Manuel Perez
Miami-Dade Product Control

MAR 19 2018

JAVAD AHMAD
LICENSE
No. 70592
STATE OF FLORIDA
PROFESSIONAL ENGINEER

AL-FAROOQ CORPORATION
ENGINEERS & PRODUCT DEVELOPMENT
9360 SUNSET DRIVE, SUITE 220
MIAMI, FLORIDA 33173 (C.A.N. 3538)
TEL. (305) 264-8100 FAX. (305) 262-6978

COMP–ANL\W12–60TGA

SERIES 'TSD–5000' ALUM SLIDING GLASS DOOR (L.M.I.)

Titan Glass & Aluminum, LLC.
450 West 27 Street
Hialeah, FL. 33010
Tel. (305) 888–0911 Fax. (305) 671–3840

revisions:

no	date	by	description
A	02.28.13		REV. PER RER COMMENTS
B	07.30.14		GENERAL REVISION
C	03.07.18		UPDATED TO 2017 FBC

date: 11–21–12
scale: –
dr. by: TARIQ
chk. by:

drawing no.
W12–60

sheet 4 of 8

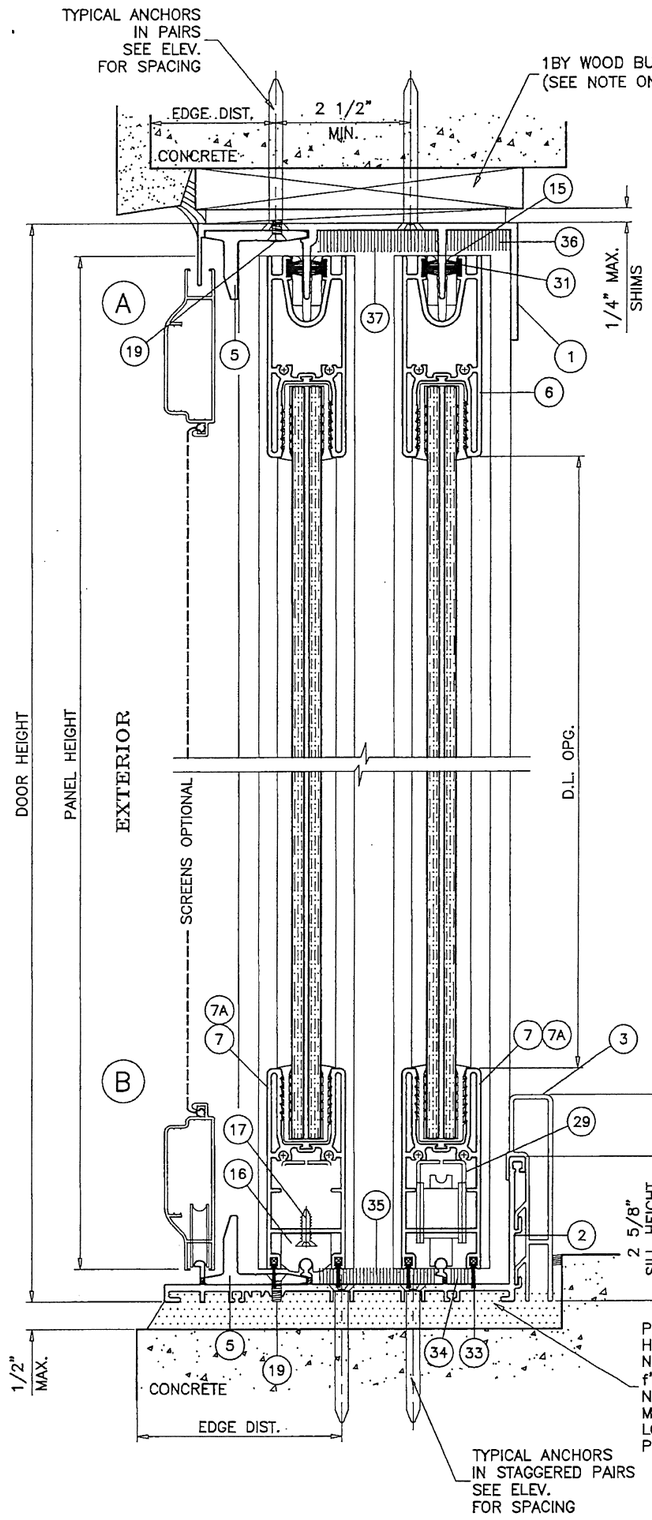

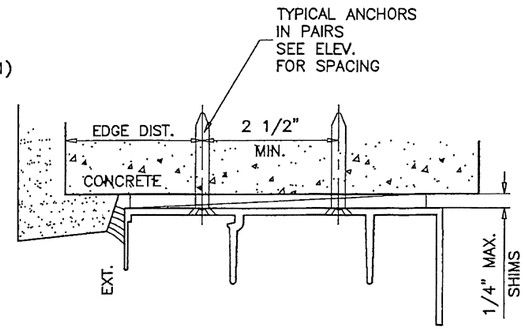

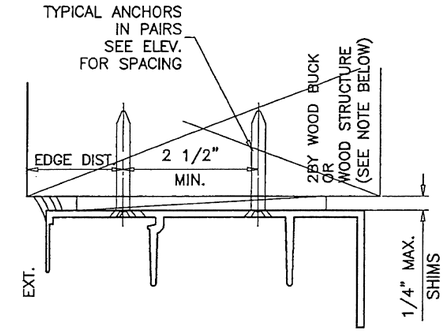

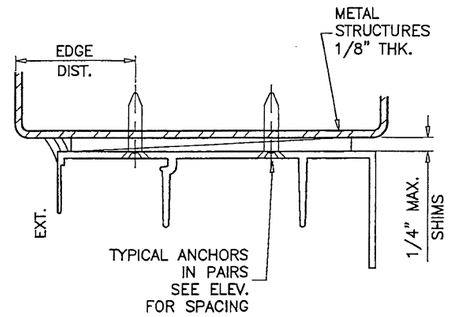

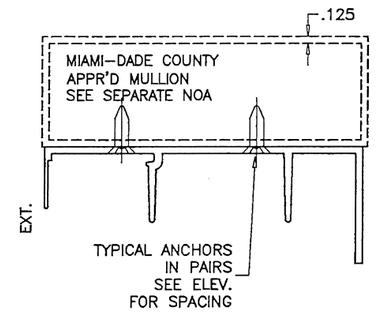

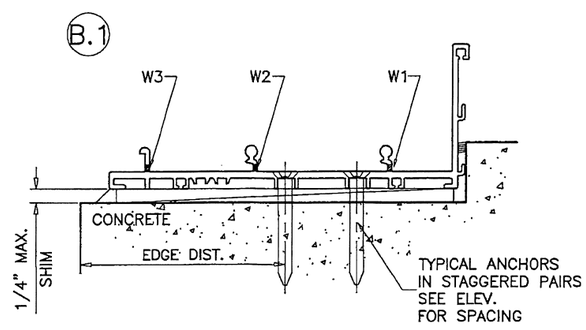

PRODUCT REVISED
as complying with the Florida Building Code
NOA-No. 18-0322.04
Expiration Date 03/14/2023
By Manuel Perez
Miami-Dade Product Control

WEEPS:

W1 = 1-1/2" WEEP NOTCHES AT EACH END
W2 = 2-1/4" WEEP NOTCHES AT EACH END
W3 = 1/2" WEEP NOTCHES AT EACH END

MAR 19 2018

JAVAD AHMAD LICENSE No. 70592 STATE OF FLORIDA PROFESSIONAL ENGINEER

AL-FAROOQ CORPORATION
ENGINEERS & PRODUCT DEVELOPMENT
9360 SUNSET DRIVE, SUITE 220
MIAMI, FLORIDA 33173 (C.A.N. 3538)
TEL. (305) 264-8100 FAX. (305) 262-6978

COMP-ANL\W12-60TGA

SERIES 'TSD-5000' ALUM SLIDING GLASS DOOR (L.M.I.)

Titan Glass & Aluminum, LLC.
450 West 27 Street
Hialeah, FL. 33010
Tel. (305) 888-0911 Fax. (305) 671-3840

revisions:

no	date	by	description
A	02.28.13		REV. PER RER COMMENTS
B	07.30.14		GENERAL REVISION
C	03.07.18		UPDATED TO 2017 FBC

date: 11-21-12
scale: 3/8" = 1"
dr. by: TARIQ
chk. by:

drawing no. W12-60

sheet 5 of 8

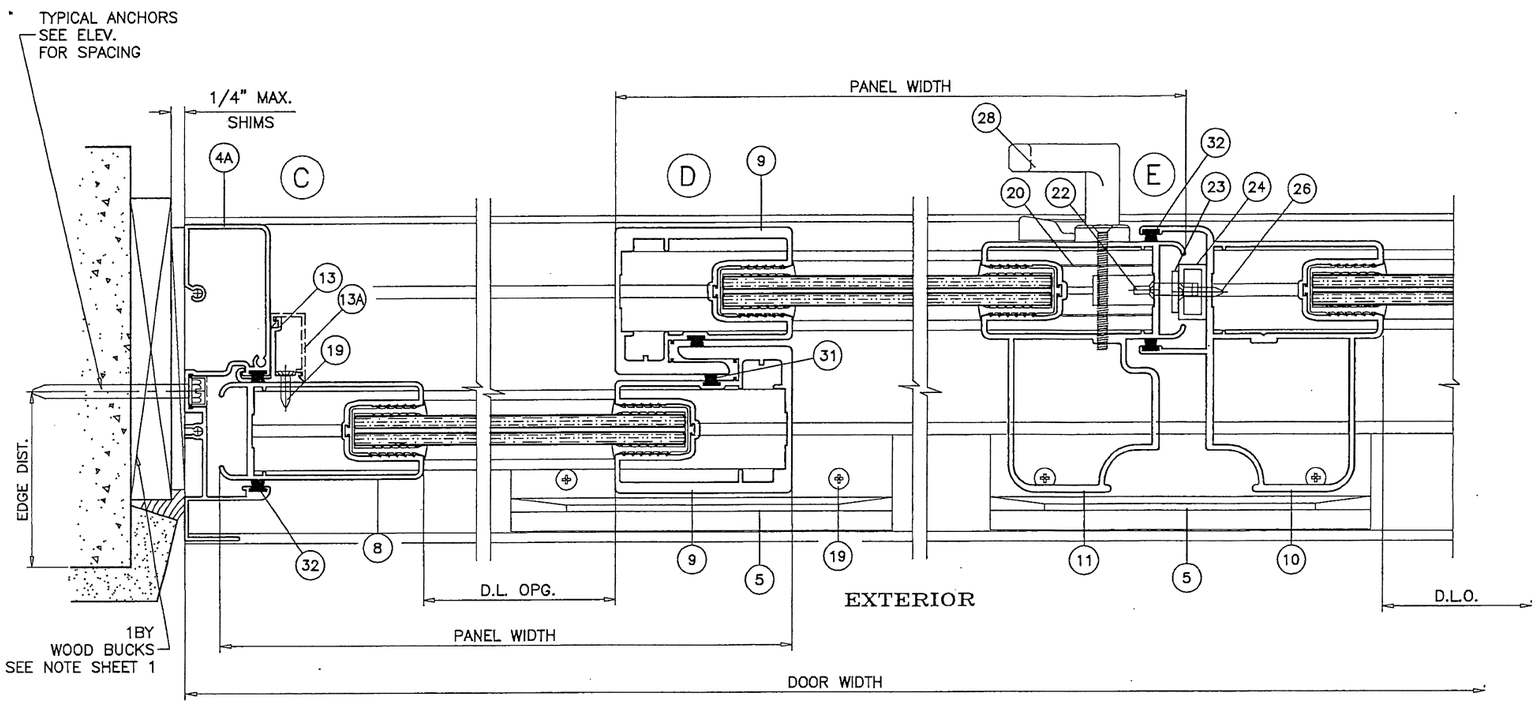

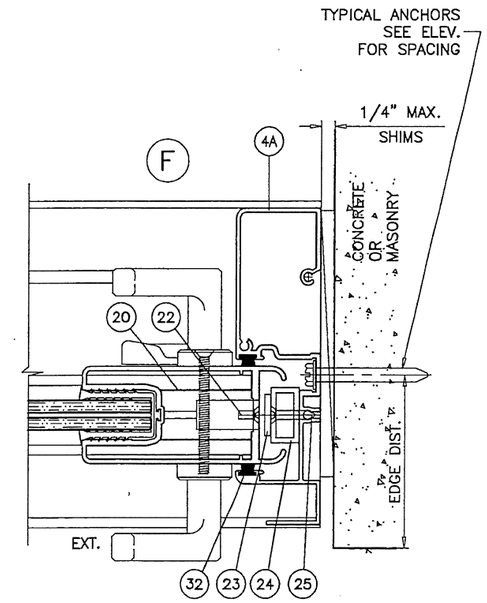

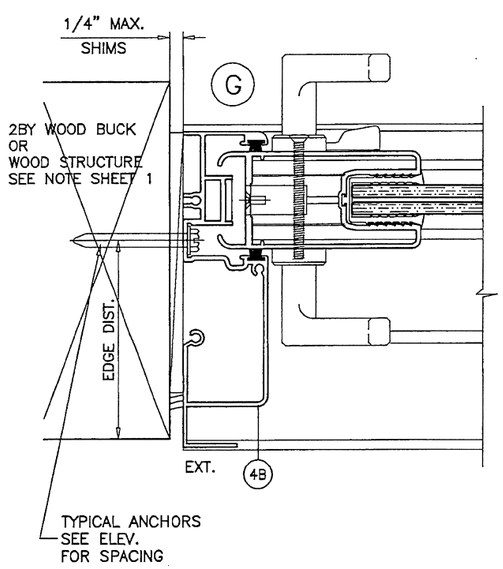

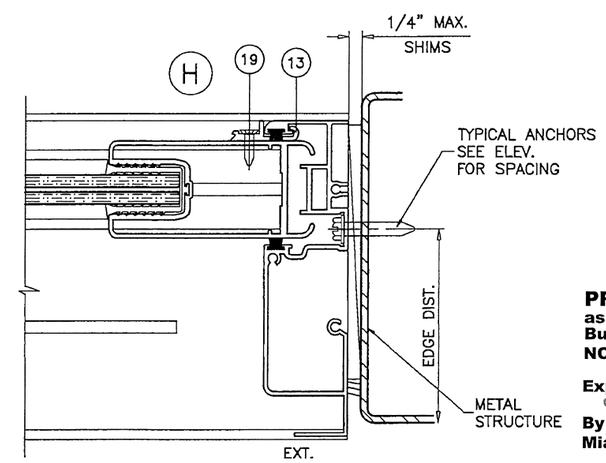

PRODUCT REVISED
as complying with the Florida Building Code
NOA-No. 18-0322.04
Expiration Date 03/14/2023
By Manuel Perez
Miami-Dade Product Control

MAR 19 2018

JAVAD AHMAD
LICENSE
No. 70592
STATE OF FLORIDA
PROFESSIONAL ENGINEER

AL-FAROOQ CORPORATION
ENGINEERS & PRODUCT DEVELOPMENT
9360 SUNSET DRIVE, SUITE 220
MIAMI, FLORIDA 33173 (C.A.N. 3538)
TEL. (305) 264-8100 FAX. (305) 262-6978

COMP-ANL\W12-60TGA

SERIES 'TSD-5000' ALUM SLIDING GLASS DOOR (L.M.I.)

Titan Glass & Aluminum, LLC.
450 West 27 Street
Hialeah, FL. 33010
Tel. (305) 888-0911 Fax. (305) 671-3840

revisions:

no	date	by	description
A	02.28.13		REV. PER RER COMMENTS
B	07.30.14		GENERAL REVISION
C	03.07.18		UPDATED TO 2017 FBC

date: 11-21-12
scale: 3/8" = 1"
dr. by: TARIQ
chk. by:

drawing no.
W12-60

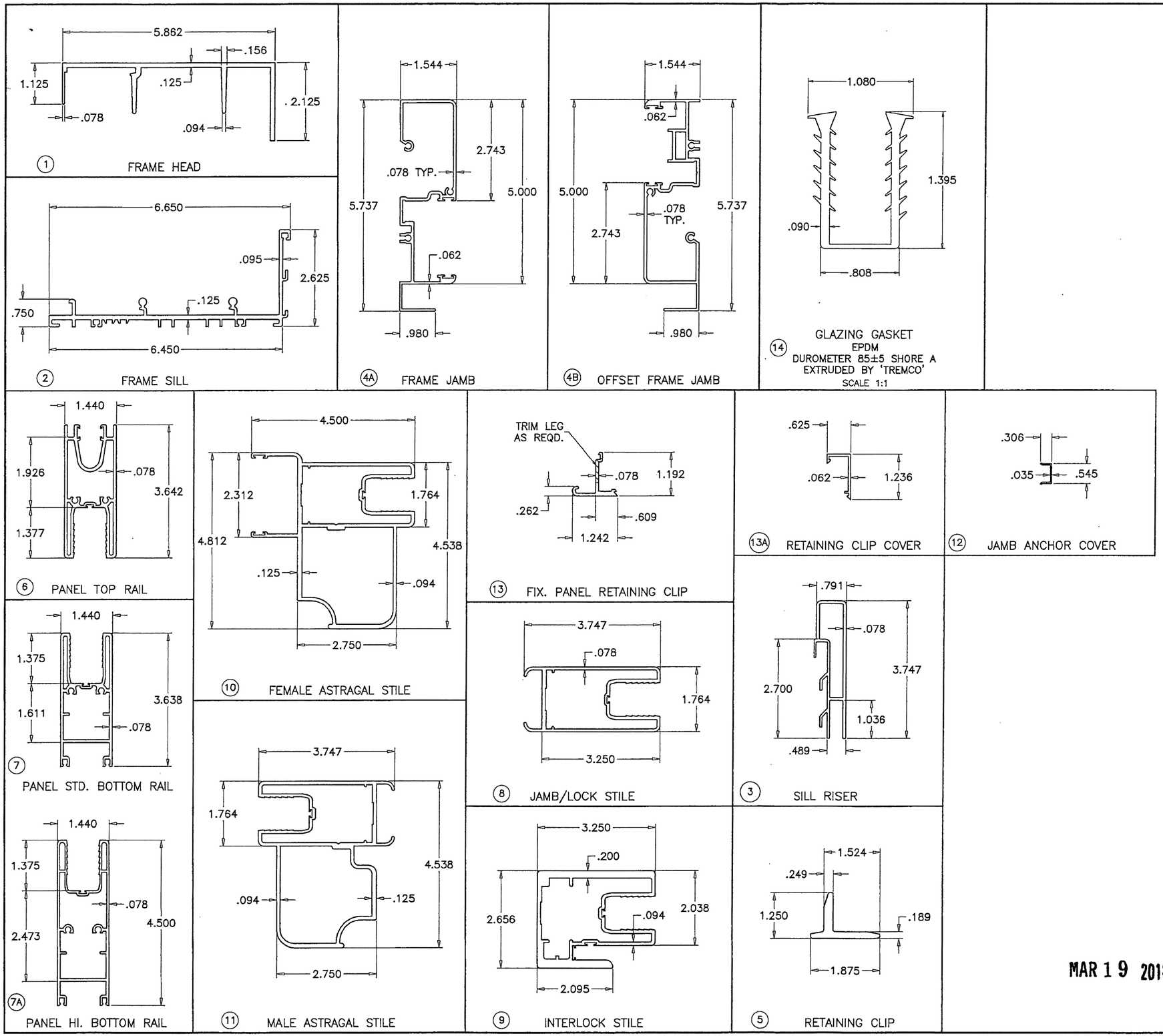

PRODUCT REVISED
as complying with the Florida Building Code
NOA-No. 18-0322.04
Expiration Date 03/14/2023
By Manuel Perez
Miami-Dade Product Control

MAR 19 2018

JAVAD AHMAD
LICENSE
No. 70592
STATE OF FLORIDA
PROFESSIONAL ENGINEER

AL-FAROOQ CORPORATION
ENGINEERS & PRODUCT DEVELOPMENT
9360 SUNSET DRIVE, SUITE 220 (C.A.N. 3538)
MIAMI, FLORIDA 33173
TEL. (305) 264-8100 FAX. (305) 262-6978

COMP-ANL\W12-60TGA

SERIES 'TSD-5000' ALUM SLIDING GLASS DOOR (L.M.I.)

Titan Glass & Aluminum, LLC.
450 West 27 Street
Hialeah, FL. 33010
Tel. (305) 888-0911 Fax. (305) 671-3840

revisions:

no	date	by	description
A	02.28.13		REV. PER RER COMMENTS
B	07.30.14		GENERAL REVISION
C	03.07.18		UPDATED TO 2017 FBC

date: 11-21-12
scale: 3/8" = 1"
dr. by: TARIQ
chk. by:

drawing no.
W12-60

sheet 7 of 8

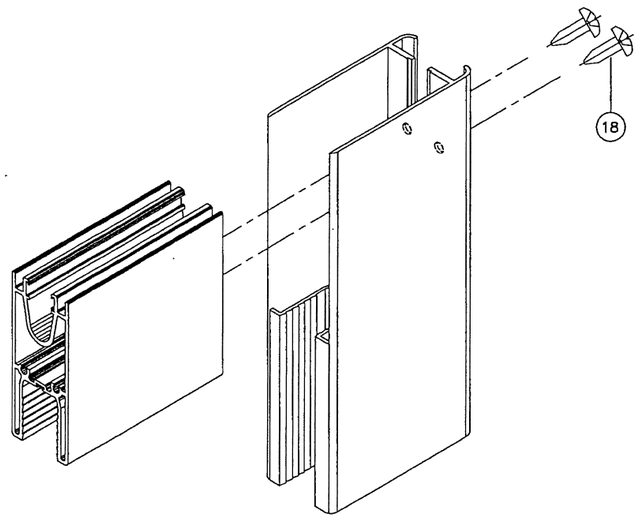

PANEL TOP CORNER

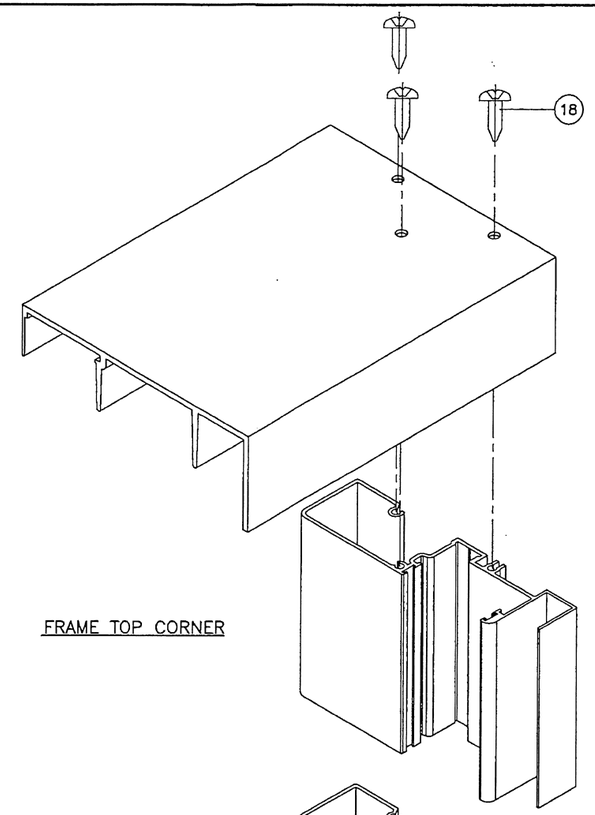

FRAME TOP CORNER

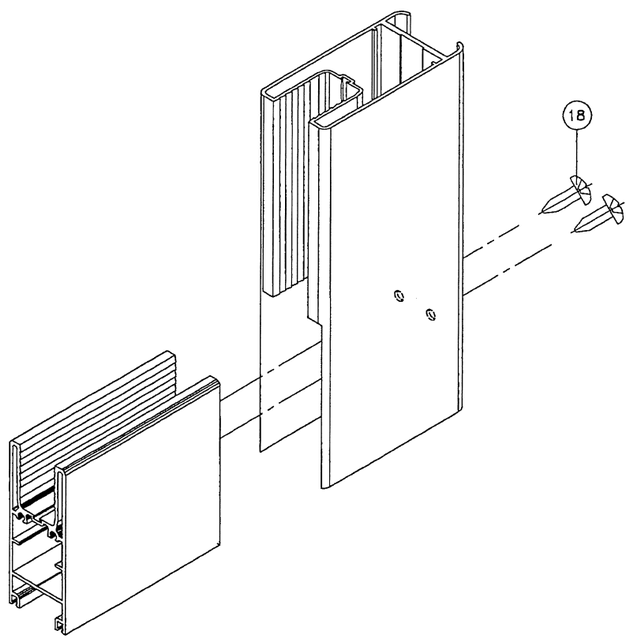

PANEL BOTTOM CORNER

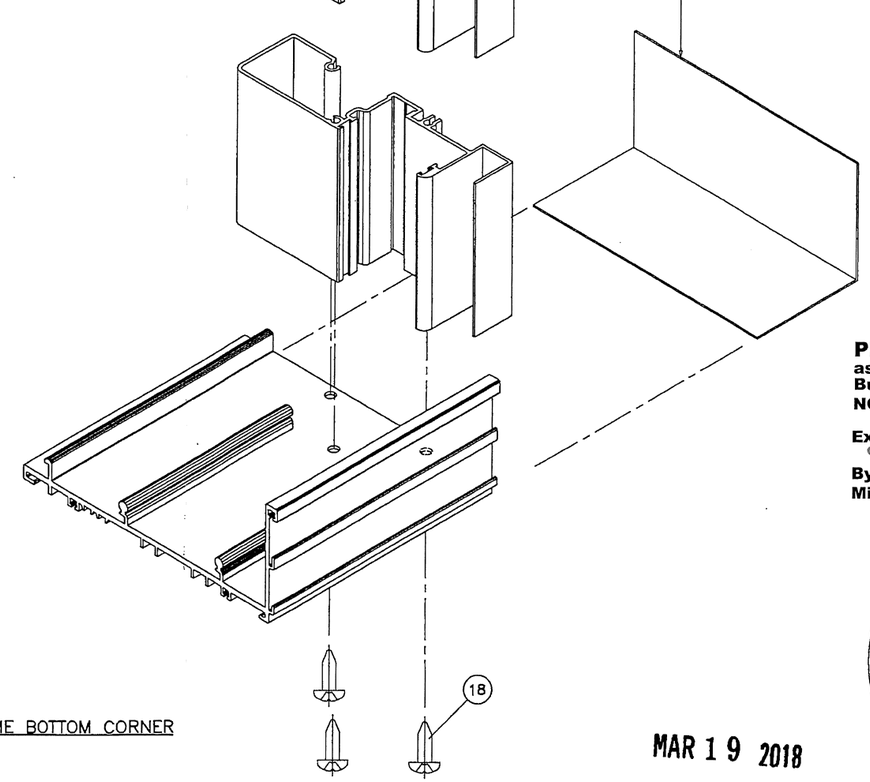

FRAME BOTTOM CORNER

PRODUCT REVISED
as complying with the Florida Building Code
NOA-No. 18-0322.04
Expiration Date 03/14/2023
By Manuel Perez
Miami-Dade Product Control

MAR 19 2018

JAVAD AHMAD
LICENSE
No. 70592
STATE OF FLORIDA
PROFESSIONAL ENGINEER

AL-FAROOQ CORPORATION
ENGINEERS & PRODUCT DEVELOPMENT
9360 SUNSET DRIVE, SUITE 220
MIAMI, FLORIDA 33173 (C.A.N. 3538)
TEL. (305) 264-8100 FAX. (305) 262-6978

COMP-ANL\W12-60TGA

SERIES 'TSD-5000' ALUM SLIDING GLASS DOOR (L.M.I.)

Titan Glass & Aluminum, LLC.
450 West 27 Street
Hialeah, FL. 33010
Tel. (305) 888-0911 Fax. (305) 671-3840

revisions:

no	date	by	description
A	02.28.13		REV. PER RER COMMENTS
B	07.30.14		GENERAL REVISION
C	03.07.18		UPDATED TO 2017 FBC

date: 11-21-12
scale: 3/8" = 1"
dr. by: TARIQ
chk. by:

drawing no.
W12-60

sheet 8 of 8