MIAMI-DADE COUNTY
PRODUCT CONTROL SECTION
11805 SW 26 Street, Room 208
Miami, Florida 33175-2474
T (786) 315-2590 F (786) 315-2599
www.miamidade.gov/economy

DEPARTMENT OF REGULATORY AND ECONOMIC RESOURCES (RER)
BOARD AND CODE ADMINISTRATION DIVISION

NOTICE OF ACCEPTANCE (NOA)

Clopay Building Products Company
8585 Duke Boulevard
Mason, OH 45040

SCOPE:

This NOA is being issued under the applicable rules and regulations governing the use of construction materials. The documentation submitted has been reviewed and accepted by Miami-Dade County RER-Product Control Section to be used in Miami Dade County and other areas where allowed by the Authority Having Jurisdiction (AHJ).
This NOA shall not be valid after the expiration date stated below. The Miami-Dade County Product Control Section (In Miami Dade County) and/or the AHJ (in areas other than Miami Dade County) reserve the right to have this product or material tested for quality assurance purposes. If this product or material fails to perform in the accepted manner, the manufacturer will incur the expense of such testing and the AHJ may immediately revoke, modify, or suspend the use of such product or material within their jurisdiction. RER reserves the right to revoke this acceptance, if it is determined by Miami-Dade County Product Control Section that this product or material fails to meet the requirements of the applicable building code.
This product is approved as described herein, and has been designed to comply with the Florida Building Code, including the High Velocity Hurricane Zone.

DESCRIPTION: Classic Single Car Steel Pan W9 DP62 Sectional Garage Door up to 9'-0" Wide w/ Optional Impact Resistant Glazing

APPROVAL DOCUMENT: Drawing No. **104847**, titled "Single Car W9 Pan Door", sheets 1 through 3 of 3, dated 05/20/2015, with revision 4 dated 07/18/2017, prepared by Clopay Building Products Company, signed and sealed by Scott Hamilton, P.E. on 07/11/2018, bearing the Miami-Dade County Product Control renewal stamp with the Notice of Acceptance number and expiration date by the Miami-Dade County Product Control Section.

MISSILE IMPACT RATING: Large and Small Missile Impact Resistant

LABELING: A permanent label with the manufacturer's name or logo, manufacturing address, model number, the positive and negative design pressure rating, indicate impact rated if applicable, installation instruction drawing reference number, approval number (NOA), the applicable test standards, and the statement reading 'Miami-Dade County Product Control Approved' is to be located on the door's side track, bottom angle, or inner surface of a panel.

RENEWAL of this NOA shall be considered after a renewal application has been filed and there has been no change in the applicable building code negatively affecting the performance of this product.

TERMINATION of this NOA will occur after the expiration date or if there has been a revision or change in the materials, use, and/or manufacture of the product or process. Misuse of this NOA as an endorsement of any product, for sales, advertising or any other purposes shall automatically terminate this NOA. Failure to comply with any section of this NOA shall be cause for termination and removal of NOA.

LIMITATION: This approval requires the manufacturer to do testing of all coils used to fabricate door panels. A minimum of 2 specimens shall be cut from each coil and tensile tested according to ASTM E-8 by a Miami-Dade County approved laboratory. Every 3 months, the manufacturer shall mail to this office a copy of the tested reports. Only coils with average yield strength of 34,000 psi or more shall be used to make door panels for Miami-Dade County under this Notice of Acceptance.

ADVERTISEMENT: The NOA number preceded by the words Miami-Dade County, Florida, and followed by the expiration date may be displayed in advertising literature. If any portion of the NOA is displayed, then it shall be done in its entirety.

INSPECTION: A copy of this entire NOA shall be provided to the user by the manufacturer or its distributors and shall be available for inspection at the job site at the request of the Building Official.

This NOA **renews NOA # 17-0809.26** and consists of this page 1 and evidence pages E-1, E-2 and E-3, as well as approval document mentioned above.
The submitted documentation was reviewed by **Carlos M. Utrera, P.E.**

MIAMI-DADE COUNTY APPROVED

08/06/2018

NOTICE OF ACCEPTANCE: EVIDENCE SUBMITTED

1. Evidence submitted under previous NOA's

A. DRAWINGS ***"Submitted under NOA #15-0622.09"***

1. Drawing No. **104847**, titled "Single Car W9 Pan Door", sheets 1 through 3 of 3, dated 05/20/2015, with revision 03 dated 08/11/2015, prepared by Clopay Building Products Company, signed and sealed by Mark Westerfield, P.E.

B. TESTS ***"Submitted under NOA #15-0225.18"***

1. Test reports on 1) Uniform Static Air Pressure Test, Loading per FBC TAS 202-94
   2) Large Missile Impact Test per FBC, TAS 201-94
   3) Cyclic Wind Pressure Loading per FBC, TAS 203-94
   4) Forced Entry Test, per FBC, TAS 202-94
   5) Tensile Test per ASTM E8

   Along with marked-up drawings and installation diagram of Clopay 9'x 8', 24 ga. steel garage door Model 94W9 with windows, prepared by American Test Lab, Inc., Test Report No. **ATLNC 1202.01-13**, dated 09/03/2014, signed and sealed by David W. Johnson, P.E.

   "Submitted under NOA # 08-0724.04"

2. Test reports on 1) Uniform Static Air Pressure Test, Loading per FBC TAS 202-94
   2) Large Missile Impact Test per FBC, TAS 201-94
   3) Cyclic Wind Pressure Loading per FBC, TAS 203-94
   4) Forced Entry Test, per FBC, TAS 202-94
   5) Tensile Test per ASTM E8

   Along with marked-up drawings and installation diagram of Clopay 9'x 8', 24 ga. steel garage door Model 94W9 with windows, prepared by American Test Lab, Inc., Test Report No. **ATLNC 0610.01-08**, dated 07/16/2008, signed and sealed by David W. Johnson, P.E.
3. Test report on Salt Spray per ASTM B117 of painted G40 galvanized coated panels, prepared by Stork Materials Technology, Test Report No. **30160-04-63365**, dated 01/26/2005, signed by John D. Lee, P.E.

C. CALCULATIONS ***"Submitted under NOA #15-0622.09"***

1. Anchor calculations prepared by Clopay Building Products Company, dated 06/01/2015, signed and sealed by Mark Westerfield, P.E.

   "Submitted under NOA # 08-0724.04"

2. Jamb anchor calculations complying with FBC-2004, prepared by Clopay Building Products Company, dated 07/22/2008, signed and sealed by Scott Hamilton, P.E.

D. QUALITY ASSURANCE

1. Miami-Dade Department of Regulatory and Economic Resources (RER)

08/06/2018

Carlos M. Utrera, P.E.
Product Control Examiner
NOA No 18-0716.02
Expiration Date: September 25, 2023
Approval Date: August 16, 2018

NOTICE OF ACCEPTANCE: EVIDENCE SUBMITTED

E. MATERIAL CERTIFICATIONS ***"Submitted under NOA # 07-0807.14"***

1. Test report on Accelerated Weathering Using Xenon Arc Light Apparatus per ASTM G155 of Lexan SLX2432T Clear Polycarbonate, prepared by Hurricane Engineering & Testing, Inc., Test Report No. **HETI-06-A002**, dated 12/04/2006, signed by Rafael E. Droz-Seda, P.E.
2. Test report on Self-Ignition Temperature per ASTM D1929, Rate of Burn per ASTM D635, and Smoke Density per ASTM D2843 of the Lexan Plastic, prepared by ETC Laboratories, Test Report No. **ETC-06-1024-17496.0,** dated 05/26/2006, signed by Joseph L. Doldan, P.E.

F. STATEMENTS ***"Submitted under NOA #15-0622.09"***

1. Statement letter of code conformance to the 5th edition (2014) FBC issued by Clopay Building Products Company, dated 06/01/2015, signed and sealed by Mark Westerfield, P.E.
2. Statement letter of no financial interest issued by Clopay Building Products Company, dated 06/01/2015, signed and sealed by Mark Westerfield, P.E.

2. Evidence submitted under NOA # 17-0809.26

A. DRAWINGS

1. Drawing No. **104847**, titled "Single Car W9 Pan Door", sheets 1 through 3 of 3, dated 05/20/2015, with revision 4 dated 07/18/2017, prepared by Clopay Building Products Company, signed and sealed by Mark Westerfield, P.E.

B. TESTS

1. None.

C. CALCULATIONS

1. None.

D. QUALITY ASSURANCE

1. Miami-Dade Department of Regulatory and Economic Resources (RER)

E. MATERIAL CERTIFICATIONS

1. None.

F. STATEMENTS

1. Statement letter of code conformance to 2010, 5th Edition (2014) and 6th Edition (2017) FBC issued by Clopay Building Products Company, dated 08/02/2017, signed and sealed by Mark Westerfield, P.E.

08/06/2018

Carlos M. Utrera, P.E.
Product Control Examiner
NOA No 18-0716.02
Expiration Date: September 25, 2023
Approval Date: August 16, 2018

NOTICE OF ACCEPTANCE: EVIDENCE SUBMITTED

3. New evidence submitted

A. DRAWINGS

1. Drawing No. **104847**, titled "Single Car W9 Pan Door", sheets 1 through 3 of 3, dated 05/20/2015, with revision 4 dated 07/18/2017, prepared by Clopay Building Products Company, signed and sealed by Scott Hamilton, P.E. on 07/11/2018.

B. TESTS

1. None.

C. CALCULATIONS

1. None.

D. QUALITY ASSURANCE

1. Miami-Dade Department of Regulatory and Economic Resources (RER)

E. MATERIAL CERTIFICATIONS

1. None.

F. STATEMENTS

1. Statement letter of code conformance to 2010, 5th Edition (2014) and 6th Edition (2017) FBC issued by Clopay Building Products Company, dated 07/11/2018, signed and sealed by Scott Hamilton, P.E.
2. Statement letter of no financial interest issued by Clopay Building Products Company, dated 07/11/2018, signed and sealed by Scott Hamilton, P.E.

08/06/2018

Carlos M. Utrera, P.E.
Product Control Examiner
NOA No 18-0716.02
Expiration Date: September 25, 2023
Approval Date: August 16, 2018

CLOPAY MODELS 94, 84A, 93, 4F, HOLMES MODEL 48

SHEET: 1 OF 3

REVISIONS					
REV. NO.	ZONE:	DATE:	ECN NO.	APPVD:	DESCRIPTION
B	–	11/2013	–	SH	AS TESTED PER WITH IMPACT RESISTANT LITES
02	–	5/20/15	–	MW	UPDATED TO 3 PAGES FOR MIAMI-DADE APPLICATION
03	–	8/11/15	–	MW	CLARIFIED TOG-L-LOC LOCATIONS AND IMPACT WINDOW DETAILS
04	–	7/18/17	–	SH	UPDATED CODE COMPLIANCE STATEMENT TO ADD 6TH EDITION FBC.

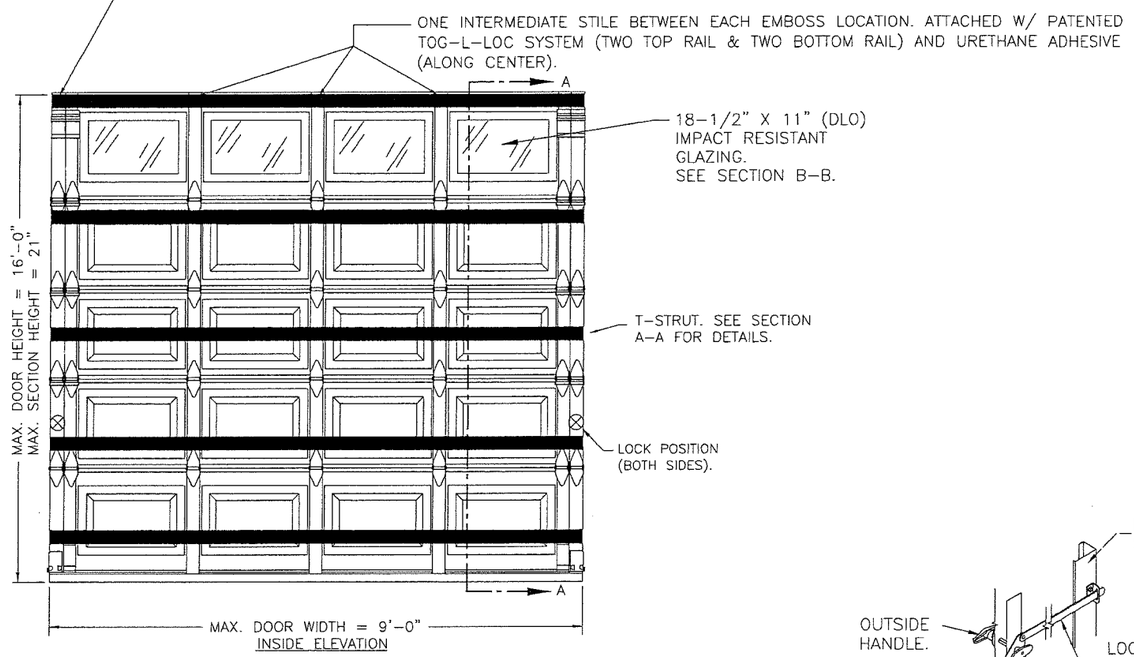

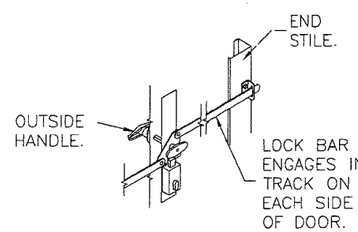

OUTSIDE KEYED LOCK WITH LOCK BAR LOCKING.

SECTION B-B

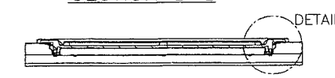

DETAIL 'D'

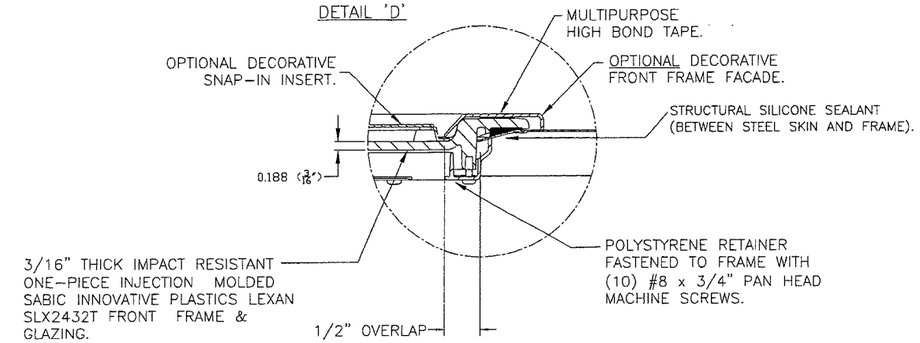

IMPACT-RESISTANT GLAZING DETAILS

DOOR HEIGHT	# OF SECTIONS
6'0" TO 7'0"	4
7'6" TO 8'9"	5
9'0" TO 10'6"	6
10'9" TO 12'3"	7
12'6" TO 14'0"	8
14'3" TO 15'9"	9
16'0"	10

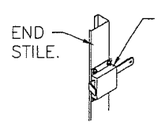

INSIDE SLIDE BOLT LOCK OPTION.

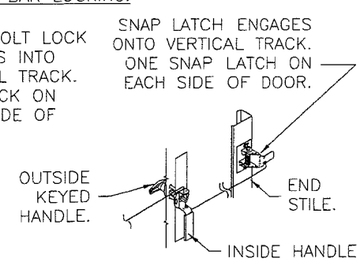

OUTSIDE KEYED LOCK WITH SNAP LATCH LOCK OPTION.

THIS PRODUCT CONFORMS TO THE REQUIREMENTS OF THE 2010 FBC, THE FIFTH EDITION FBC, AND THE SIXTH EDITION FBC.

DESIGN LOADS: +62.0 P.S.F. & -72.0 P.S.F.

SCOTT HAMILTON LICENSE No 63286 STATE OF FLORIDA PROFESSIONAL ENGINEER 7/18/18

PRODUCT RENEWED
as complying with the Florida Building Code
NOA-No. 18-0716.02
Expiration Date 09/25/2023
By
Miami-Dade Product Control

DESIGN ENGINEER:
SCOTT HAMILTON, P.E.
FLORIDA LICENSE No. 63286

Unless Stated Otherwise TOLERANCES are
.0 = ±.031
.00 = ±.015
.000 = ±.005
.0000 = ±.001
Degrees = ±1/2°
Unless Stated Otherwise DIMENSIONS ARE IN INCHES.

Clopay Building Products Company
8585 Duke Boulevard
Mason, OH 45040 USA
Tel. No. 513-770-4800
Fax No. 513-770-4853

MANUFACTURING PRODUCT CODE PAN-2F143
PART NO.: N/A
WINDLOAD RATING W9 DP62

DESCRIPTION: SINGLE CAR W9 PAN DOOR			
DRAWN BY: SH	DATE: 10/1/13	SCALE: NTS	DWG. SIZE B
CHECKED BY: MW	DATE: 5/20/15	SHEET 1 OF 3	
DWG. NO.: 104847		VER: M-D	

CLOPAY MODELS 94, 84A, 93, 4F, HOLMES MODEL 48

SHEET: 2 OF 3

REVISIONS					
REV. NO.	ZONE:	DATE:	ECN NO.	APPVD:	DESCRIPTION
04	–	–	–	–	SEE REVISION HISTORY ON SHEET ONE.

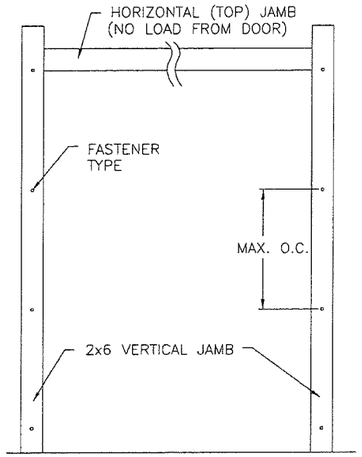

JAMB TO SUPPORTING STRUCTURE ATTACHMENT

NOTES:
1. ALL THE LOAD FROM THE DOOR IS TRANSFERRED TO THE TRACK AND THEN FROM THE TRACK TO THE 2x6 VERTICAL SYP (GRADE #2 OR BETTER) JAMBS. NO LOAD FROM THE DOOR IS TRANSFERRED TO THE HORIZONTAL (TOP) JAMB.
2. EACH VERTICAL JAMB SEES A MAXIMUM DESIGN LOAD OF +279 LB & −324 LB. PER LINEAR FOOT OF JAMB.
3. ALL JAMB FASTENERS MAY BE (BUT ARE NOT REQUIRED TO BE) COUNTERSUNK TO PROVIDE A FLUSH MOUNTING SURFACE.
4. A 1/3 STRESS INCREASE FOR WIND LOAD WAS NOT USED IN THE CALCULATION OF ALLOWABLE LOADS FOR ANCHORS AND FASTENERS FOR STEEL, CONCRETE AND MASONRY.

PREPARATION OF JAMBS BY OTHERS

NOTE: THE DESIGN OF THE SUPPORTING STRUCTURAL ELEMENTS SHALL BE THE RESPONSIBILITY OF THE PROFESSIONAL OF RECORD FOR THE BUILDING OR STRUCTURE AND IN ACCORDANCE WITH CURRENT BUILDING CODES FOR THE LOADS LISTED ON THIS DRAWING.

2x6 JAMB TO SUPPORTING STRUCTURE ATTACHMENT

(NOT TO BE USED FOR ATTACHMENT OF TRACK ANGLE TO 2x6 VERTICAL JAMBS OR SUPPORTING STRUCTURE)

BUILDING TYPE	FASTENER TYPE	MAXIMUM ON-CENTER DISTANCE BETWEEN FASTENERS*	STEEL WASHERS REQUIRED
HOLLOW CMU BLOCK WALL	1/4" x 1-1/4" MIN. EMBED ULTRACON CONCRETE ANCHOR	6"	1" O.D.
GROUT-FILLED CMU BLOCK	1/4" x 1-3/4" MIN. EMBED ULTRACON CONCRETE ANCHOR	9-3/4"	1" O.D.
2000 PSI MIN. CONCRETE	1/4" x 1" MIN. EMBED ULTRACON CONCRETE ANCHOR	8-1/2"	1" O.D.
2000 PSI MIN. CONCRETE	1/4" x 1" MIN. EMBED TAPCON CONCRETE ANCHOR	7-1/4"	1" O.D.
2000 PSI MIN. CONCRETE	3/8" X 1-3/4" MIN. EMBED WEJ-IT ANKR TITE SLEEVE ANCHOR	18"	INCLUDED
4000 PSI MIN. CONCRETE	3/8" X 1-3/4" MIN. EMBED WEJ-IT ANKR TITE SLEEVE ANCHOR	24"	INCLUDED
WOOD FRAME (SYP 0.55 SG)	1/2" x 3" LAG SCREW (ASTM A307, GRADE A) 1-5/8" EMBED INTO STRUCTURE	19-1/2"	1" O.D.

* FIRST (BOTTOM) ANCHOR STARTING AT NO MORE THAN HALF OF THE MAXIMUM ON-CENTER DISTANCE. HIGHEST ANCHOR INSTALLED AT LEAST AS HIGH AS THE DOOR OPENING.
CLOPAY DOES NOT SUPPLY JAMB ATTACHMENT FASTENERS.
MINIMUM DISTANCE BETWEEN CENTER OF ANCHOR AND EDGE OF CONCRETE BLOCK: 2-1/2", EXCLUDING STUCCO THICKNESS.

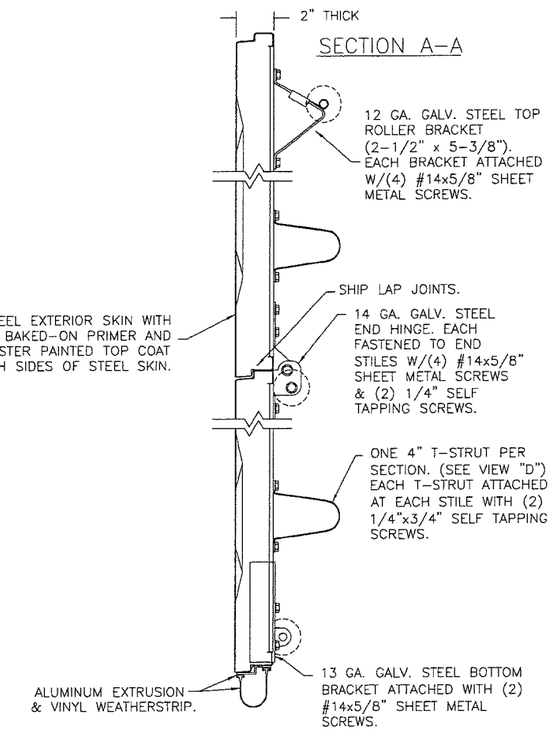

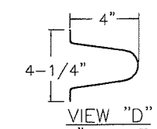

VIEW "D"
4" TALL TAPER STRUT.
0.057" MIN. GALV. STEEL,
50 KSI. MIN.

SECTION A–A (SIDE VIEW)

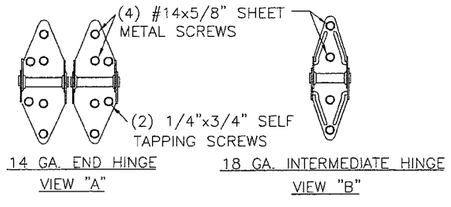

SCOTT HAMILTON LICENSE No 63286 STATE OF FLORIDA PROFESSIONAL ENGINEER
7/4/18

DESIGN ENGINEER:
SCOTT HAMILTON, P.E.
FLORIDA LICENSE No. 63286

PRODUCT RENEWED
as complying with the Florida Building Code
NOA-No. 18-0716.02
Expiration Date 09/25/2023
By
Miami-Dade Product Control

DESIGN LOADS: +62.0 P.S.F. & −72.0 P.S.F.

MANUFACTURING PRODUCT CODE PAN-2F143

PART NO.: N/A

WINDLOAD RATING W9 DP62

Unless Stated Otherwise TOLERANCES are
.0 = ±.031
.00 = ±.015
.000 = ±.005
.0000 = ±.001
Degrees = ±1/2°
Unless Stated Otherwise DIMENSIONS ARE IN INCHES.

Clopay Building Products Company
8585 Duke Boulevard
Mason, OH 45040 USA
Tel. No. 513-770-4800
Fax No. 513-770-4853

DESCRIPTION: SINGLE CAR W9 PAN DOOR			
DRAWN BY: SH	DATE: 10/1/13	SCALE: NTS	DWG. SIZE B
CHECKED BY: MW	DATE: 5/20/15	SHEET 2 OF 3	
DWG. NO.: 104847		VER: M-D	

CLOPAY MODELS 94, 84A, 93, 4F, HOLMES MODEL 48

SHEET: 3 OF 3

REVISIONS					
REV. NO.	ZONE:	DATE:	ECN NO.	APPVD:	DESCRIPTION
04	–	–	–	–	SEE REVISION HISTORY ON SHEET ONE.

2" TRACK CONFIGURATION.

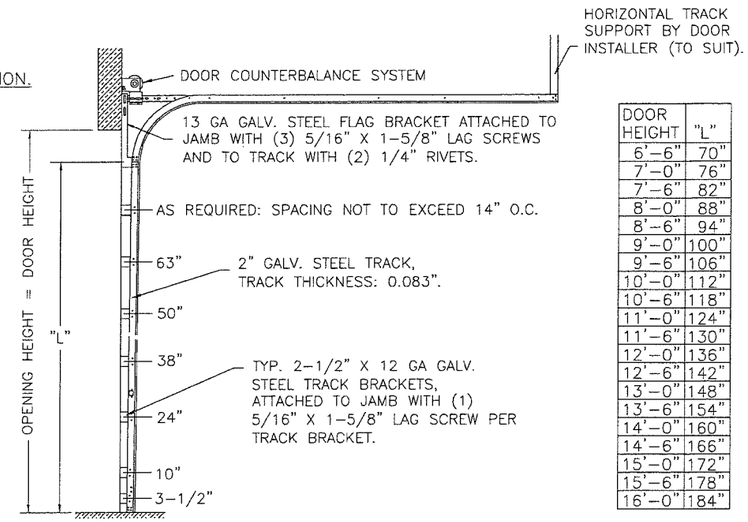

NOTE: TRACK CONFIGURATION ABOVE THE DOOR OPENING DOES NOT AFFECT THE WIND LOAD RATING OF THIS DOOR.

DOOR HEIGHT	"L"
6'-6"	70"
7'-0"	76"
7'-6"	82"
8'-0"	88"
8'-6"	94"
9'-0"	100"
9'-6"	106"
10'-0"	112"
10'-6"	118"
11'-0"	124"
11'-6"	130"
12'-0"	136"
12'-6"	142"
13'-0"	148"
13'-6"	154"
14'-0"	160"
14'-6"	166"
15'-0"	172"
15'-6"	178"
16'-0"	184"

JAMB CONFIGURATION.

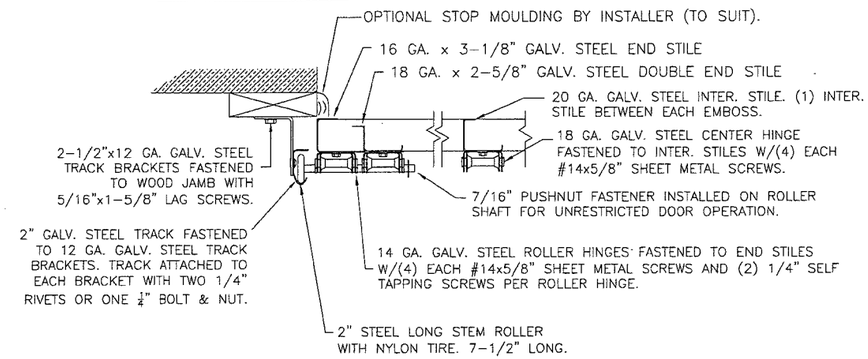

SECTION C-C

PREPARATION OF JAMBS BY OTHERS.

3" TRACK IS ALSO AVAILABLE.

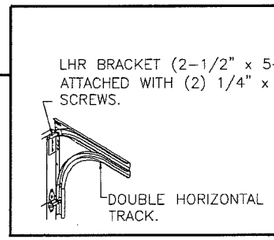

DOUBLE TRACK
LOW HEADROOM OPTION
(AVAIL. FOR BOTH 2" AND 3" TRACK)

SCOTT HAMILTON LICENSE No 63286 STATE OF FLORIDA PROFESSIONAL ENGINEER

PRODUCT RENEWED
as complying with the Florida Building Code
NOA-No. 18-0716.02
Expiration Date 09/25/2023
By
Miami-Dade Product Control

DESIGN ENGINEER:
SCOTT HAMILTON, P.E.
FLORIDA LICENSE No. 63286

DESIGN LOADS: +62.0 P.S.F. & -72.0 P.S.F.

MANUFACTURING PRODUCT CODE PAN-2F143

PART NO.: N/A

WINDLOAD RATING W9 DP62

Unless Stated Otherwise TOLERANCES are
.0 = ±.031
.00 = ±.015
.000 = ±.005
.0000 = ±.001
Degrees = ±1/2°
Unless Stated Otherwise DIMENSIONS ARE IN INCHES.

Clopay Building Products Company
8585 Duke Boulevard
Mason, OH 45040 USA
Tel. No. 513-770-4800
Fax No. 513-770-4853

DESCRIPTION: SINGLE CAR W9 PAN DOOR

DRAWN BY: SH	DATE: 10/1/13	SCALE: NTS	DWG. SIZE B
CHECKED BY: MW	DATE: 5/20/15	SHEET 3 OF 3	
DWG. NO.: 104847		VER: M-D	