MIAMI-DADE COUNTY
PRODUCT CONTROL SECTION
11805 SW 26 Street, Room 208
Miami, Florida 33175-2474
T (786) 315-2590 F (786) 315-2599
www.miamidade.gov/economy

DEPARTMENT OF REGULATORY AND ECONOMIC RESOURCES (RER)
BOARD AND CODE ADMINISTRATION DIVISION

NOTICE OF ACCEPTANCE (NOA)

E.S. Windows, LLC
10653 N.E. Quaybridge Ct.
Miami, FL 33138

SCOPE:

This NOA is being issued under the applicable rules and regulations governing the use of construction materials. The documentation submitted has been reviewed and accepted by Miami-Dade County RER -Product Control Section to be used in Miami Dade County and other areas where allowed by the Authority Having Jurisdiction (AHJ).

This NOA shall not be valid after the expiration date stated below. The Miami-Dade County Product Control Section (In Miami Dade County) and/or the AHJ (in areas other than Miami Dade County) reserve the right to have this product or material tested for quality assurance purposes. If this product or material fails to perform in the accepted manner, the manufacturer will incur the expense of such testing and the AHJ may immediately revoke, modify, or suspend the use of such product or material within their jurisdiction. RER reserves the right to revoke this acceptance, if it is determined by Miami-Dade County Product Control Section that this product or material fails to meet the requirements of the applicable building code.

This product is approved as described herein, and has been designed to comply with the Florida Building Code, including the High Velocity Hurricane Zone.

DESCRIPTION: Series 4000 Aluminum Sliding Glass Door w/ Reinforcements–LMI

APPROVAL DOCUMENT: Drawing No. **W03-100 Rev O,** titled "Series-4000 Aluminum Sliding Glass Door (LMI), sheets 1 through 7 of 7, prepared by Al-Farooq Corporation, dated 11/08/03 and last revised on SEP 07, 2017, signed and sealed by Javad Ahmad, P.E., bearing the Miami-Dade County Product Control Renewal stamp with the Notice of Acceptance number and expiration date by the Miami-Dade County Product Control Section.

MISSILE IMPACT RATING: Large and Small Missile Impact Resistant

Limitations:

1. See sheet 2 for Design Pressure (DP) Vs Glass types, size & reinforcing levels for (**4**) Panels or **less** configured SGD and sheet 3 for taller (2) panels configured **OX**, **XO** or **XX** w/ **Heavy Duty** reinforcing. Exterior (positive) design pressures are limited to **+70 PSF** w / **2-1/2"** sill & up to **+85 PSF** w/ **3-1/4"** sill for **OX** or **XO** and **+80 P**SF w/ **3-1/4"** sill for **XX** door.
2. Max. Door frame area not to exceed 96"x192" =128 ft^2 (4-panel) or 98"x 111" =75.5 ft^2 (2-HD panel), corresponding to the tested area.

LABELING: Each unit shall bear a permanent label with the manufacturer's name or logo, Barranquilla, Columbia, state and series and following statement: "Miami-Dade County Product Control Approved", noted herein.

RENEWAL of this NOA shall be considered after a renewal application has been filed and there has been no change in the applicable building code negatively affecting the performance of this product.

TERMINATION of this NOA will occur after the expiration date or if there has been a revision or change in the materials, use, and/or manufacture of the product or process. Misuse of this NOA as an endorsement of any product, for sales, advertising or any other purposes shall automatically terminate this NOA. Failure to comply with any section of this NOA shall be cause for termination and removal of NOA.

ADVERTISEMENT: The NOA number preceded by the words Miami-Dade County, Florida, and followed by the expiration date may be displayed in advertising literature. If any portion of the NOA is displayed, then it shall be done in its entirety.

INSPECTION: A copy of this entire NOA shall be provided to the user by the manufacturer or its distributors and shall be available for inspection at the job site at the request of the Building Official.

This NOA **renews NOA #17-0505.05** and consists of this page 1 and evidence pages E-1, E-2 & E-3, as well as approval document mentioned above.

The submitted documentation was reviewed by **Ishaq I. Chanda, P.E.**

MIAMI-DADE COUNTY APPROVED

10/10/18

NOTICE OF ACCEPTANCE: EVIDENCE SUBMITTED

1. Evidence submitted under previous approvals

A. DRAWINGS

1. Manufacturer's die drawings and sections (submitted under files below)
2. Drawing No. **W03-100 Rev M,** titled "Series-4000 Aluminum Sliding Patio Door (LMI), sheets 1 through 7 of 7, prepared by Al-Farooq Corporation, dated 11/08/03 and last revised on OCT 21, 2015, signed and sealed by Javad Ahmad, P.E.

B. TESTS (Submitted under files #15-0629.01/#14-0923.11/13-1115.03/#12-0312.03/#09-0210.07 and #08-0417.03)

1. Test reports on 1) Air Infiltration Test, per FBC, TAS 202-94
   2) Uniform Static Air Pressure Test, Loading per FBC, TAS 202-94
   3) Water Resistance Test, per FBC, TAS 202-94
   4) Large Missile Impact Test per FBC, TAS 201-94
   5) Cyclic Wind Pressure Loading per FBC, TAS 203-94
   6) Forced Entry Test, per FBC 2411 3.2.1 and TAS 202-94

Along with marked-up drawings and installation diagram of an Aluminum Sliding Glass Door, prepared by Fenestration Testing Laboratory, Inc., Test Report No(s). **FTL-3908**, dated 10/09/03, **FTL-3909**, dated 09/26/03, **FTL-3910**, dated 09/30/03 and **FTL-4287**, dated 09/22/04, signed and sealed by Joseph Chan, P.E. and the Test Report No. **FTL-4287**, dated 09/22/04, signed and sealed by Edmundo Largaespada, P.E.

2 Additional Reference test reports No. **FTL-5471**, dated 01/24/08 and **FTL 7894** (Tandem Nylon Rollers), per TAS 201/203-94, issued by Fenestration Testing Lab, signed & sealed by Michael Wenzel, P.E. and Idalmis Ortega, P.E., respectively.

C. CALCULATIONS

1. Anchor verification calculation, complying w/ FBC 2014(5th Edition), dated 07/31/2015, prepared by Al-Farooq Corporation, signed and sealed by Javad Ahmad, P.E.
2. Glazing complies with ASTME-1300-02,-04 & -09.

D. QUALITY ASSURANCE

1. Miami Dade Department of Regulatory and Economic Resources (RER).

E. MATERIAL CERTIFICATIONS

1. Notice of Acceptance No. **14-0916.11** issued to **Kuraray America, Inc.** (Former E.I. DuPont DeNemours & Co., Inc. for the "**Sentry Glass ® (Clear and White) Glass Interlayers**", expiring on 07/04/18.
2. Notice of Acceptance No. **14-0916.10** issued to **Kuraray America, Inc.** (Former E.I. DuPont DeNemours & Co., Inc. for the "**Kurray Butacite PVB Interlayers**", expiring on 12/11/2016.

Ishaq I. Chanda

Ishaq I. Chanda, P.E.
Product Control Examiner
NOA No. 18-0905.06
Expiration Date: March 18, 2024
Approval Date: October 18, 2018

NOTICE OF ACCEPTANCE: EVIDENCE SUBMITTED

F. STATEMENTS

1. Statement letter of compliance to FBC 2014 (5th Edition) and of no financial interest issued by Al-Farooq Corp., dated 07/29/15, signed and sealed by Javad Ahmad, P.E.
2. Statement of Lab compliance, part of above test reports.
3. Distribution agreement dated 03/05/14 between ES Windows, LLC & Energia Solar, SA, and Colombia, signed by Andres Chamorro (Gen MGR) and Clara Garcia (Sales MGR), respectively on behalf of their companies (submitted under **#13-1115.03)**

G. OTHER

1. This NOA **revises NOA # 14-0923.11,** expiring March 18, 2019.
2. Tet proposal # 07-3815, approved by BCCO and dated 07/01/14 by RER.

2. Evidence submitted under previous approval

A. DRAWINGS

1. Manufacturer's die drawings and sections.
2. Drawing No. **W03-100 Rev O,** titled "Series-4000 Aluminum Sliding Glass Door (LMI), sheets 1 through 7 of 7, prepared by Al-Farooq Corporation, dated 11/08/03 and last revised on SEP 07, 2017, signed and sealed by Javad Ahmad, P.E.

B. TESTS

1. Test reports on 1) Air Infiltration Test, per FBC, TAS 202-94
   2) Uniform Static Air Pressure Test, Loading per FBC, TAS 202-94
   3) Water Resistance Test, per FBC, TAS 202-94
   4) Large Missile Impact Test per FBC, TAS 201-94
   5) Cyclic Wind Pressure Loading per FBC, TAS 203-94
   6) Forced Entry Test, per FBC 2411 3.2.1 and TAS 202-94

Along with marked-up drawings and installation diagram of an Aluminum Sliding Glass Door, prepared by Black water Testing, Inc., Test Report No(s). **BT-ESW-15-004**, dated 04/18/2016, signed and sealed by YamilG.
Kuri, P.E.

C. CALCULATIONS

1. Anchor verification calculation, complying w/ FBC 2017 (6th Edition), dated 11/18/2016 and last revised on 09-07-17, prepared by Al-Farooq Corporation, signed and sealed by Javad Ahmad, P.E.

D. QUALITY ASSURANCE

1. Miami Dade Department of Regulatory and Economic Resources (RER).

E. MATERIAL CERTIFICATIONS

1. Notice of Acceptance No. **16-1117.01** issued to Kuraray America, Inc. (former E.I. DuPont DE Nemours & Co., Inc.) for "**Trosifol**: Ultra clear, clear & color PVB glass interlayer" (former "Kuraray **Butacite** PVB Interlayer)", expiring on 07/08/19.

Ishaq I. Chanda

Ishaq I. Chanda, P.E.
Product Control Examiner
NOA No. 18-0905.06
Expiration Date: March 18, 2024
Approval Date: October 18, 2018

NOTICE OF ACCEPTANCE: EVIDENCE SUBMITTED

F. STATEMENTS

1. Statement letter of conformance to FBC 2014(5th edition) and FBC 2017(6th Edition), dated 09/06/17 prepared by Al-Farooq Corporation, signed and sealed by Javad Ahmad, P.E.

G. OTHER

1. This NOA **revises NOA # 15-0629.01**, expiring 03/18/2019.

2. New Evidence submitted

A. DRAWINGS

1. Drawing No. **W03-100 Rev O,** titled "Series-4000 Aluminum Sliding Glass Door (LMI), sheets 1 through 7 of 7, prepared by Al-Farooq Corporation, dated 11/08/03 and last revised on SEP 07, 2017, signed and sealed by Javad Ahmad, P.E.

B. TESTS

1. None.

C. CALCULATIONS

1. None.

D. QUALITY ASSURANCE

1. Miami Dade Department of Regulatory and Economic Resources (RER).

E. MATERIAL CERTIFICATIONS

1. Notice of Acceptance No. **16-1117.01** issued to Kuraray America, Inc. (former E.I. DuPont DE Nemours & Co., Inc.) for "**Trosifol**: Ultra clear, clear & color PVB glass interlayer" (former "Kuraray **Butacite** PVB Interlayer)", expiring on 07/08/19.

F. STATEMENTS

1. Statement letter dated AUG 27, 2018 for renewal and still conformance to FBC 2017 (6th edition), prepared by Al-Farooq Corporation, signed and sealed by Javad Ahmad, P.E.

G. OTHER

1. This NOA **renews NOA # 17-0505.05**, expiring 03/18/2024.

Ishaq I. Chanda

Ishaq I. Chanda, P.E.
Product Control Examiner
NOA No. 18-0905.06
Expiration Date: March 18, 2024
Approval Date: October 18, 2018

DETAILS (D) AND (E)

SEE SHEET 6 FOR NO REINFORCING
SEE SHEET 6 FOR MEDIUM REINFORCING
SEE SHEET 5 FOR HEAVY REINFORCING

DOORS GLAZED WITH LAMINATED GLASS RATED FOR LARGE & SMALL MISSILE IMPACT AND REQUIRE NO SHUTTERS.

DAYLITE OPENINGS WIDTHS:
FIXED/LOCK STILE–INTERLOCK = PANEL WIDTH – 5.375"
INTERLOCK–ASTRAGAL = PANEL WIDTH – 5.625"

DAYLITE OPENING HEIGHT:
PANEL HEIGHT – 5.00"

PANEL HEIGHT = DOOR FRAME HEIGHT – 1.250"

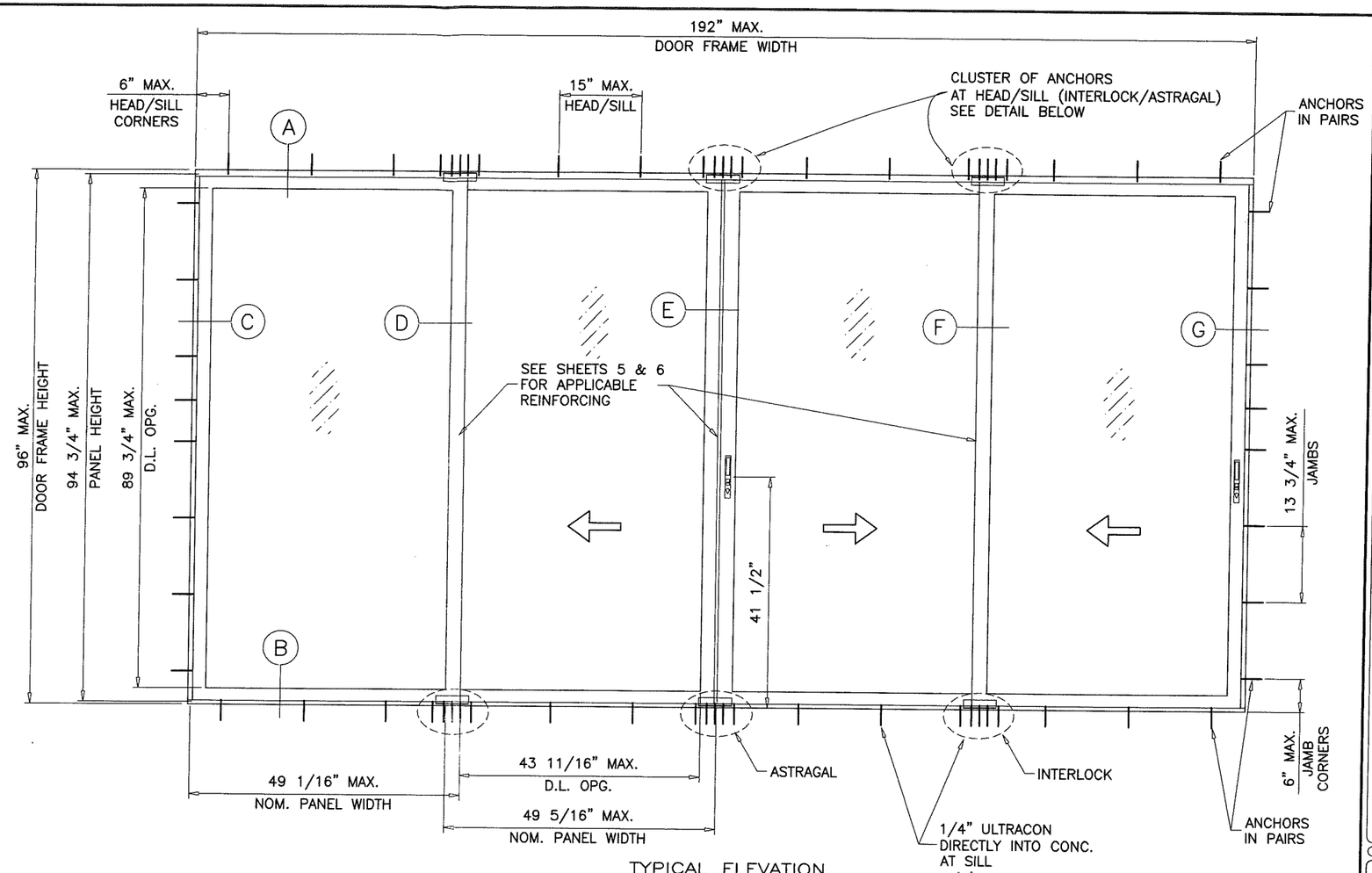

TYPICAL ELEVATION
TESTED UNIT

PRODUCT REVIEWED
as complying with the Florida
Building Code
Acceptance No. 18-0905.06
Expiration Date MARCH 18, 2024
By Shang I. Chang
General Code Product Control

PRODUCT REVISED
as complying with the Florida
Building Code
Acceptance No. 17-0505.05
Expiration Date MAR 18, 2019
By Shang I. Chang
Miami Dade Product Control

SERIES–4000 ALUM SLIDING GLASS DOOR

DESIGN LOAD RATING FOR DOORS TO BE AS PER CHARTS SHOWN AND APPROVED CONFIGURATIONS ON SHEETS 2 AND 3.

THIS PRODUCT HAS BEEN DESIGNED AND TESTED TO COMPLY WITH THE REQUIREMENTS OF THE 2014 (5TH EDITION)/2017 (6TH EDITION) FLORIDA BUILDING CODE INCLUDING HIGH VELOCITY HURRICANE ZONE (HVHZ).

1BY OR 2BY WOOD BUCKS & BUCK FASTENERS BY OTHERS, MUST BE DESIGNED AND INSTALLED ADEQUATELY TO TRANSFER APPLIED PRODUCT LOADS TO THE BUILDING STRUCTURE.

ANCHORS SHALL BE CORROSION RESISTANT, SPACED AS SHOWN ON DETAILS AND INSTALLED PER MANUF'S INSTRUCTIONS. SPECIFIED EMBEDMENT TO BASE MATERIAL SHALL BE BEYOND WALL DRESSING OR STUCCO.

A LOAD DURATION INCREASE IS USED IN DESIGN OF ANCHORS INTO WOOD ONLY.

ALL SHIMS TO BE HIGH IMPACT, NON–METALLIC AND NON–COMPRESSIBLE.

MATERIALS INCLUDING BUT NOT LIMITED TO STEEL/METAL SCREWS, THAT COME INTO CONTACT WITH OTHER DISSIMILAR MATERIALS SHALL MEET THE REQUIREMENTS OF THE 2014/2017 FLORIDA BLDG. CODE & ADOPTED STANDARDS.

THIS PRODUCT APPROVAL IS GENERIC AND DOES NOT PROVIDE INFORMATION FOR A SITE SPECIFIC PROJECT, i.e. LIFE SAFETY OF THIS PRODUCT, ADEQUACY OF STRUCTURE RECEIVING THIS PRODUCT AND SEALING AROUND OPENING FOR WATER INFILTRATION RESISTANCE ETC.
CONDITIONS NOT SHOWN IN THIS DRAWING ARE TO BE ANALYZED SEPARATELY, AND TO BE REVIEWED BY BUILDING OFFICIAL.

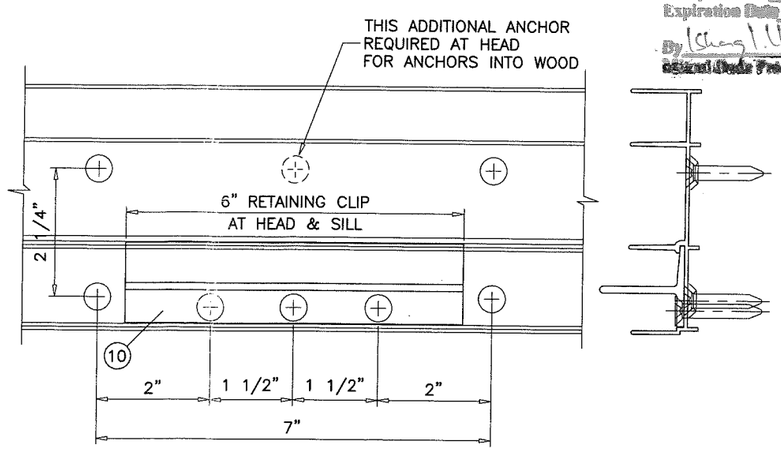

DETAIL CLUSTER OF ANCHORS AT INTERLOCK/ASTRAGAL ENDS
1/4" ULTRACON DIRECTLY INTO CONCRETE AT SILL

JAVAD AHMAD
LICENSE
No. 70592
STATE OF FLORIDA
PROFESSIONAL ENGINEER

AL-FAROOQ CORPORATION
ENGINEERS & PRODUCT DEVELOPMENT
9360 SUNSET DRIVE, SUITE 220
MIAMI, FLORIDA 33173 (C.A.N. 3538)
TEL. (305) 264-8100 FAX. (305) 262-6978
COMP–ANL\W03–100ES

SERIES–4000 ALUM SLIDING GLASS DOOR (L.M.I.)

E.S. WINDOWS, LLC
3550 N.W. 49 STREET
MIAMI, FL. 33142
TEL. (305) 638–5151 FAX. (305) 638–5158

revisions:

no	date	by	description
L	07.31.15		GENERAL REV.
M	10.20.15		REV. PER RER COMMENTS
N	11.04.16		EDITORIAL CHANGES
O	09.05.17		UPDATED TO 2017 FBC

date: 11–08–03
scale: 1/2"=1'–0"
dr. by: TARIQ
chk. by:

drawing no.
W03–100

SEE SHEET 3 FOR OX, XO OR XX DOORS WITH HEAVY REINFORCING

DESIGN LOAD CAPACITY – PSF (ALL CONFIGURATIONS SHOWN ON THIS SHEET) GLASS TYPES 'A', 'B' OR 'C'							
NOMINAL PANEL WIDTH INCHES	DOOR FRAME HEIGHT INCHES	NO REINFOR'G		MEDIUM REINFOR'G		HEAVY REINF'G	
		EXT. (+)	INT. (–)	EXT. (+)	INT. (–)	EXT. (+)	INT. (–)
30	81 1/4	70.0	80.0	70.0	80.0	70.0	80.0
36		70.0	80.0	70.0	80.0	70.0	80.0
42		–	–	70.0	80.0	70.0	80.0
48		–	–	–	–	70.0	80.0
54		–	–	–	–	70.0	71.1
30	96	–	–	70.0	80.0	70.0	80.0
36		–	–	70.0	80.0	70.0	80.0
42		–	–	–	–	70.0	80.0
48		–	–	–	–	70.0	80.0

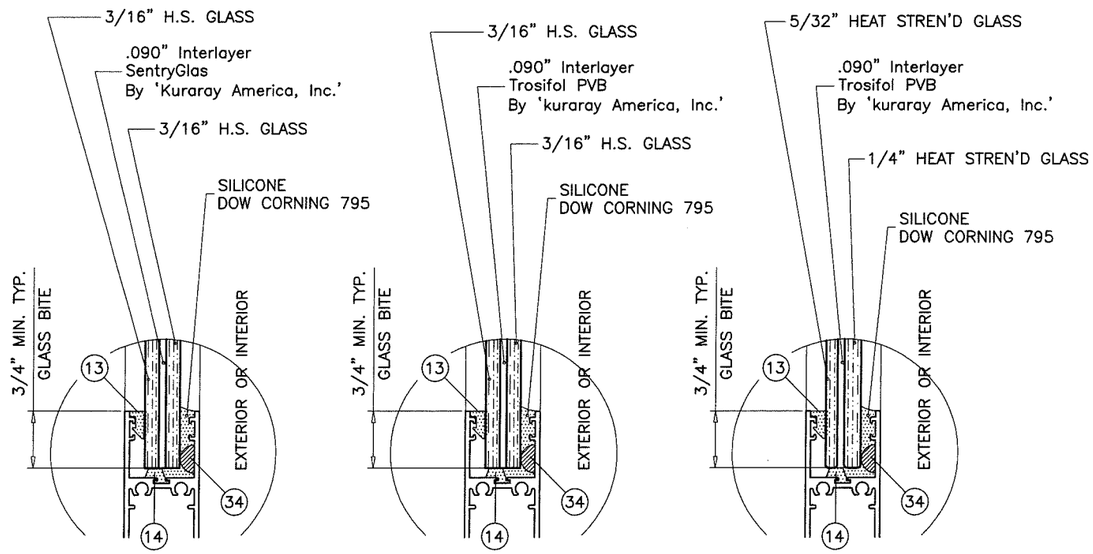

GLASS TYPE 'A' GLASS TYPE 'B' GLASS TYPE 'C'

DOOR HEIGHT AND WIDTH SIZE MUST COMPLY WITH EGRESS REQUIREMENTS PER FBC AS REQUIRED.

PRODUCT RENEWED
as complying with the Florida
Building Code
Acceptance No 18-0905.06
Expiration Date 3/18/24
By Ishaq I. Chand
Miami Dade Product Control

PRODUCT REVISED
as complying with the Florida
Building Code
Acceptance No 17-0505.05
Expiration Date 3/18/19
By Ishaq I. Chand
Miami Dade Product Control

NOTE:
GLASS CAPACITIES ON THIS SHEET ARE BASED ON ASTM E1300–09 (3 SEC. GUSTS) AND FLORIDA BUILDING COMMISSION DECLARATORY STATEMENT DCA05–DEC–219

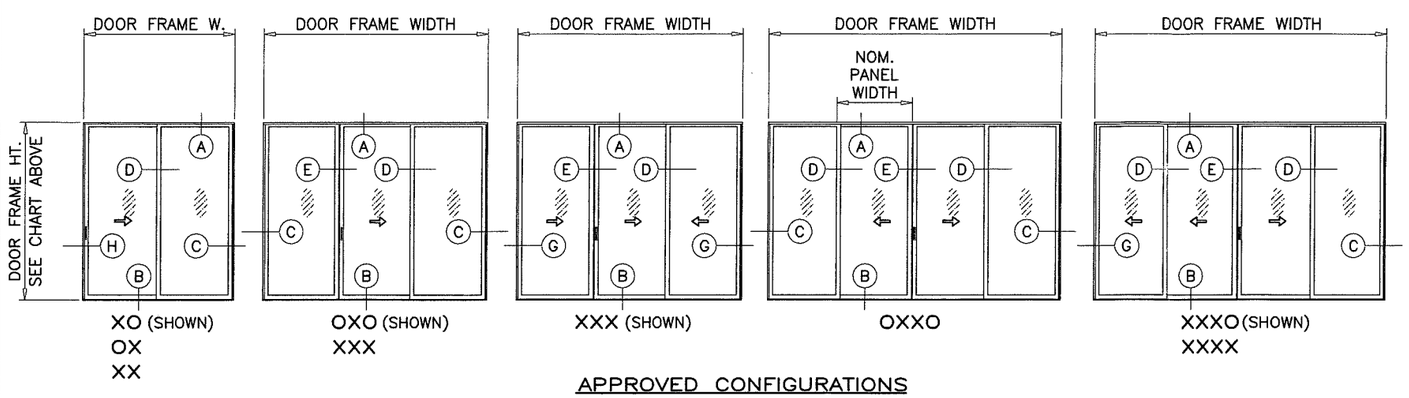

APPROVED CONFIGURATIONS

JAVAD AHMAD LICENSE No. 70592 STATE OF FLORIDA PROFESSIONAL ENGINEER

AL-FAROOQ CORPORATION
ENGINEERS & PRODUCT DEVELOPMENT
9360 SUNSET DRIVE, SUITE 220
MIAMI, FLORIDA 33173 (C.A.N. 3538)
TEL. (305) 264-8100 FAX. (305) 262-6978

COMP–ANL\W03–100ES

SERIES–4000 ALUM SLIDING GLASS DOOR (L.M.I.)

E.S. WINDOWS, LLC
3550 N.W. 49 STREET
MIAMI, FL. 33142
TEL. (305) 638–5151 FAX. (305) 638–5158

revisions:

no	date	by	description
L	07.31.15		GENERAL REV.
M	10.20.15		REV. PER RER COMMENTS
N	11.04.16		EDITORIAL CHANGES
O	09.05.17		UPDATED TO 2017 FBC

date: 11–08–03
scale: 1/2"=1'–0"
dr. by: TARIQ
chk. by:

drawing no. W03–100

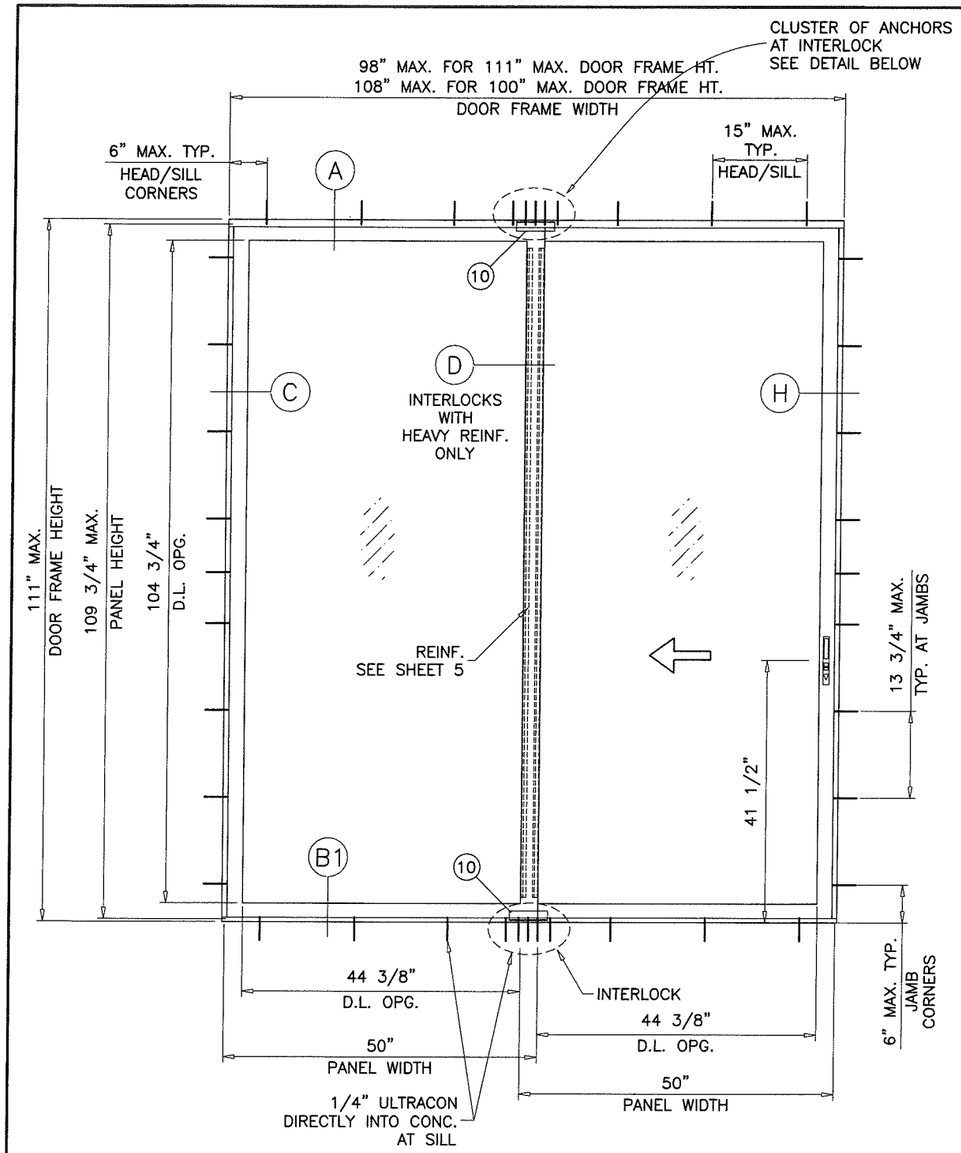

TYPICAL ELEVATION (OX) (SHOWN)

THIS SIZE TO HAVE HEAVY REINFORCING AT INTERLOCKS (SEE SHEET 5)

DESIGN LOAD CAPACITY – PSF (OX, XO OR XX ONLY) HEAVY REINF'G (SEE DETAIL SHEET 5)					
NOMINAL PANEL WIDTH INCHES	DOOR FRAME HEIGHT INCHES	GLASS TYPE 'A'		GLASS TYPE 'B'	
		EXT.(+)	INT.(–)	EXT.(+)	INT.(–)
30	81 1/4	80.0	103.0	80.0	103.0
36		80.0	103.0	80.0	103.0
42		80.0	88.3	80.0	88.3
45		64.0	82.4	85.0	85.0
48		80.0	70.0	85.0	85.0
54		72.6	63.5	77.1	77.1
30	96	80.0	103.0	80.0	103.0
36		80.0	103.0	80.0	103.0
42		80.0	70.0	85.0	85.0
45		80.0	70.0	85.0	85.0
48		80.0	70.0	85.0	85.0
54		72.0	63.5	77.1	77.1
30	100	80.0	103.0	80.0	103.0
36		80.0	103.0	80.0	103.0
42		80.0	70.0	85.0	85.0
48		80.0	70.0	85.0	85.0
49		72.6	63.5	85.0	85.0
54		72.6	63.5	–	–
30	108	80.0	70.0	85.0	85.0
36		80.0	70.0	85.0	85.0
42		80.0	70.0	85.0	85.0
48		80.0	70.0	85.0	85.0
49		–	–	85.0	85.0
30	111	80.0	70.0	80.0	70.0
36		80.0	70.0	80.0	70.0
42		80.0	70.0	80.0	70.0
48		80.0	70.0	80.0	70.0

FOR 'XX' DOORS LIMIT EXTERIOR LOADS TO +80.0 PSF

THE SHOWN EXT. (+) LOADS REQUIRE 3–1/4" SILL HEIGHT (DTL. B1 ON SHEET 4).
REDUCE EXT.(+) LOAD CAPACITY TO +70.0 PSF IF 2–1/2" SILL HEIGHT IS USED
INT.(–) LOADS REMAIN UNCHANGED.

DOOR HEIGHT AND WIDTH SIZE MUST COMPLY WITH EGRESS REQUIREMENTS PER FBC AS REQUIRED.

PRODUCT RENEWED
as complying with the Florida
Building Code
Acceptance No 18-0905.06
Expiration Date 3/18/24
By Ishaq I. Chanda
Miami-Dade Product Control

PRODUCT REVISED
as complying with the Florida
Building Code
Acceptance No 17-0505.05
Expiration Date 3/18/19
By Ishaq I. Chanda
Miami-Dade Product Control

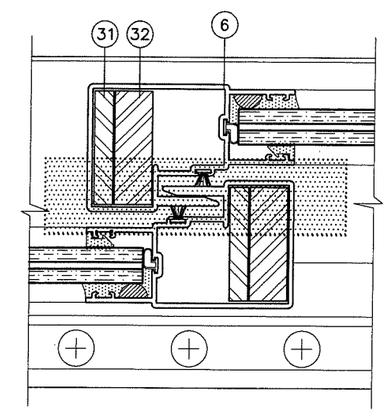

HEAVY REINFORCING
AT EXTERIOR/INTERIOR INTERLOCK

NOTE:
GLASS CAPACITIES ON THIS SHEET ARE BASED ON ASTM E1300–09 (3 SEC. GUSTS) AND FLORIDA BUILDING COMMISSION DECLARATORY STATEMENT DCA05–DEC–219

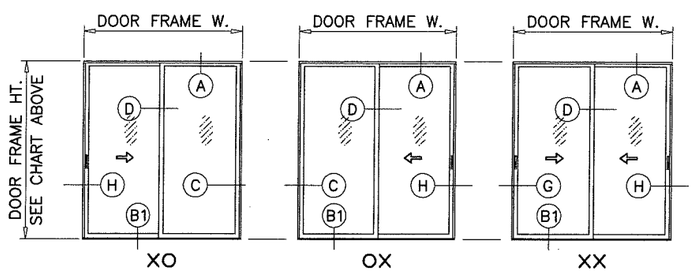

APPROVED CONFIGURATIONS

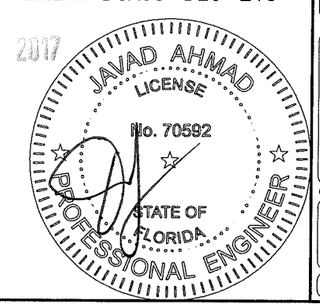

AL-FAROOQ CORPORATION
ENGINEERS & PRODUCT DEVELOPMENT
9360 SUNSET DRIVE, SUITE 220
MIAMI, FLORIDA 33173 (C.A.N. 3538)
TEL. (305) 264-8100 FAX. (305) 262-6978

COMP–ANL\W03–100ES

SERIES–4000 ALUM SLIDING GLASS DOOR (L.M.I.)

E.S. WINDOWS, LLC
3550 N.W. 49 STREET
MIAMI, FL. 33142
TEL. (305) 638–5151 FAX. (305) 638–5158

revisions:

no	date	by	description
L	07.31.15		GENERAL REV.
M	10.20.15		REV. PER RER COMMENTS
N	11.04.16		EDITORIAL CHANGES
O	09.05.17		UPDATED TO 2017 FBC

date: 11–08–03
scale: 1/2"=1'–0"
dr. by: TARIQ
chk. by:

drawing no.
W03–100

sheet 3 of 7

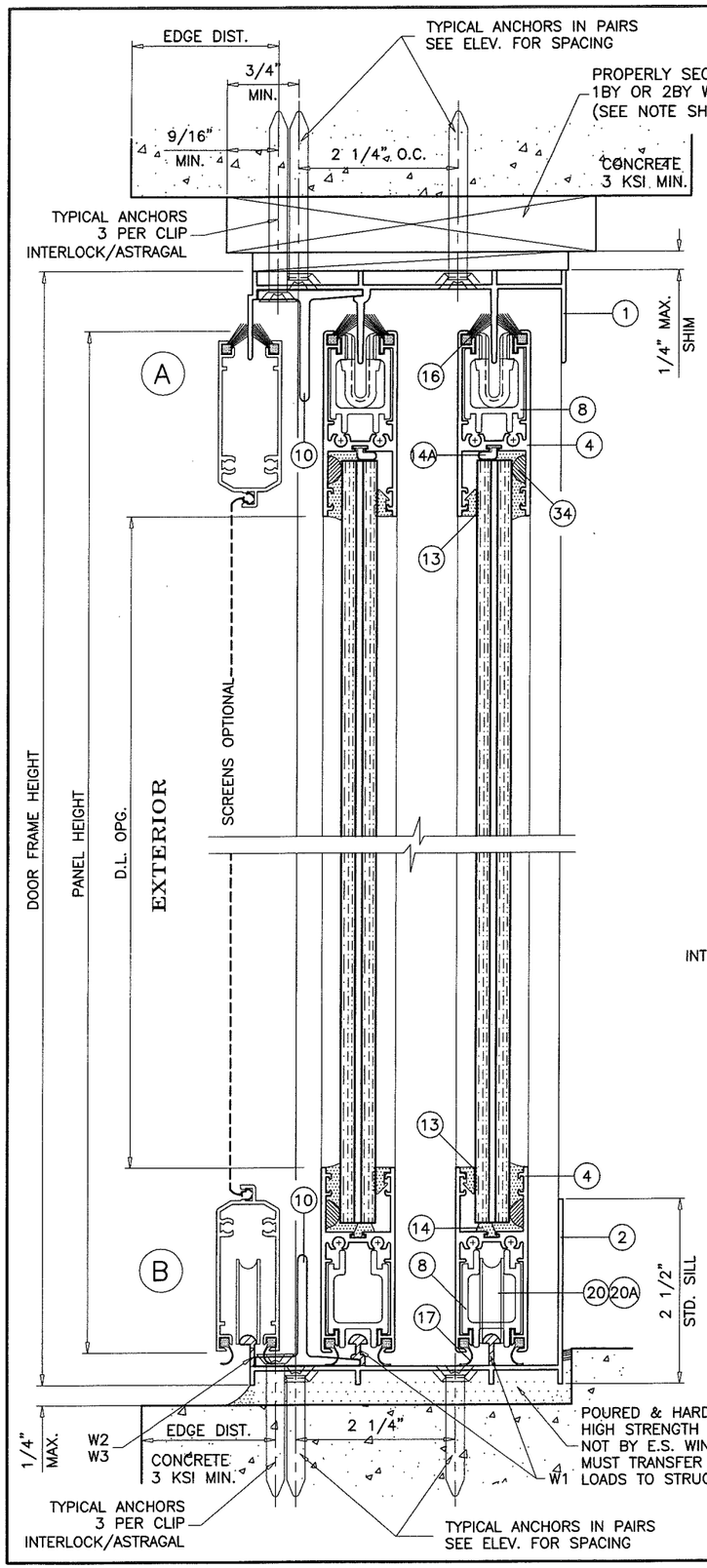

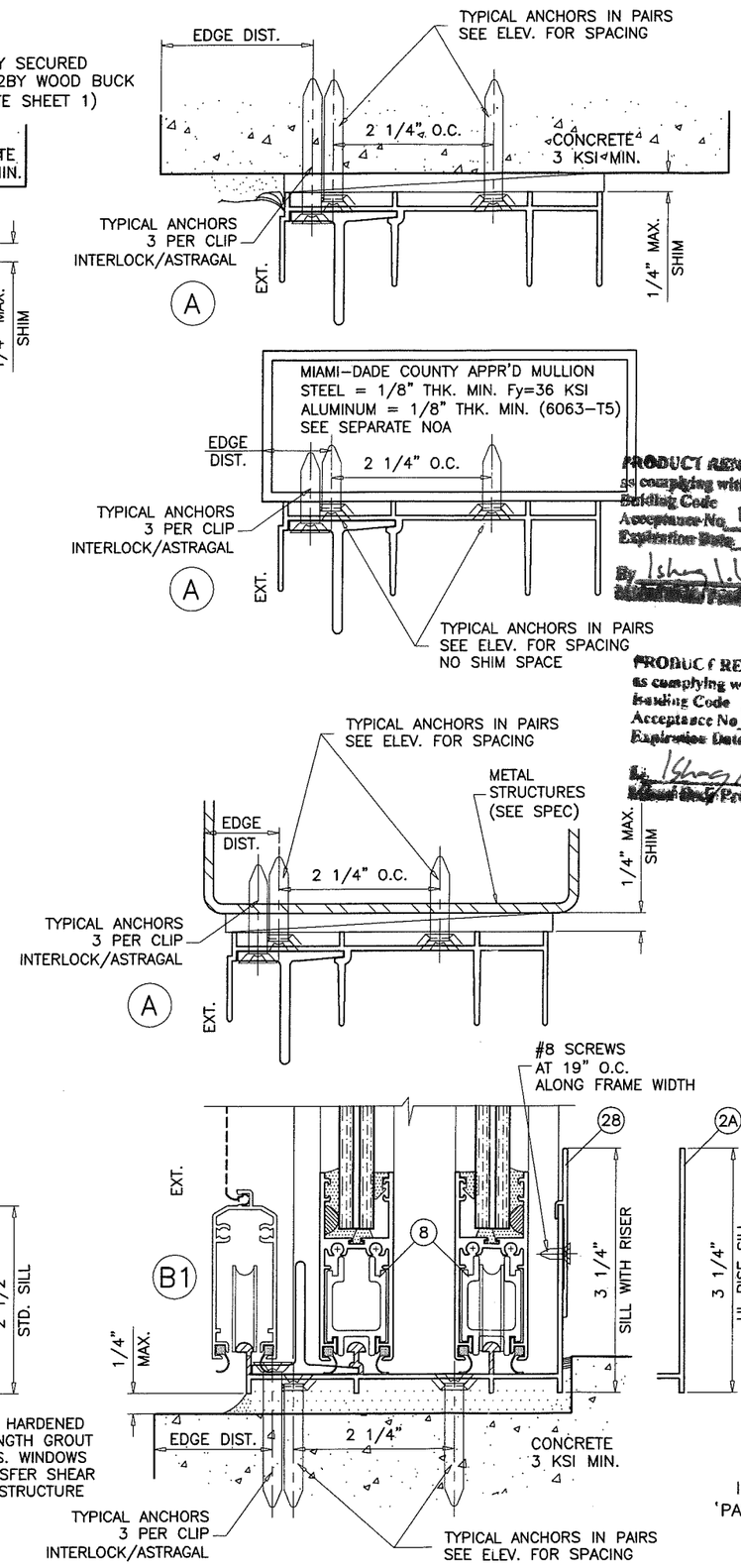

PRODUCT REVISED as complying with the Florida Building Code
Acceptance No. 18-0905.06
Expiration Date 3/18/24
By Ishwar L. Chandra
Product Control

PRODUCT REVISED as complying with the Florida Building Code
Acceptance No. 17-0505.05
Expiration Date 3/18/19
By Ishwar L. Chandra
Product Control

1X OR 2X WOOD BUCKS AND METAL STRUCTURE NOT BY E.S. WINDOWS MUST SUSTAIN LOADS IMPOSED BY GLAZING SYSTEM AND TRANSFER THEM TO THE BUILDING STRUCTURE.

TYPICAL ANCHORS: SEE ELEV. FOR SPACING

1/4" DIA. ULTRACON BY 'ELCO' (Fu=177 KSI, Fy=155 KSI)

INTO 2BY WOOD BUCKS OR WOOD STRUCTURES
1-1/2" MIN. PENETRATION INTO WOOD (HEAD/JAMBS)

THRU 1BY BUCKS INTO CONC. OR BLOCKS
1-1/4" MIN. EMBED INTO CONCRETE (HEAD/JAMBS)
1-1/4" MIN. EMBED INTO BLOCKS (JAMBS)

DIRECTLY INTO CONCRETE OR BLOCKS
1-1/2" MIN. EMBED INTO CONCRETE (HEAD/SILL/JAMBS)
1-1/4" MIN. EMBED INTO BLOCKS (JAMBS)

1/4" DIA. TEKS OR SELF DRILLING SCREWS (GRADE 5 CRS)

INTO MIAMI-DADE COUNTY APPROVED MULLIONS
OR
INTO METAL STRUCTURES (HEAD/JAMBS)
(3) THREADS MIN. PENETRATION BEYOND SUBSTRATE
ALUMINUM: 1/8" THK. MIN. (6063-T5 MIN.)
STEEL: 1/8" THK. MIN. (Fy = 36 KSI MIN.)
(STEEL IN CONTACT WITH ALUMINUM TO BE PLATED OR PAINTED)

TYPICAL EDGE DISTANCE

INTO CONCRETE AND MASONRY = 2-1/2" MIN.
INTO WOOD STRUCTURE = 3/4" MIN.
INTO METAL STRUCTURE = 3/4" MIN.

WOOD AT HEAD OR JAMBS SG = 0.55 MIN.
CONCRETE AT HEAD, SILL OR JAMBS f'c = 3000 PSI MIN.
C-90 HOLLOW/FILLED BLOCK AT JAMBS f'm = 2000 PSI MIN.

SEALANT:

ALL JOINTS AND FRAME CONNECTIONS SEALED WITH WHITE/ALUMINUM COLORED SILICONE.

WEEPHOLES:

W1 = 1-3/4" WEEP NOTCH AT EACH END
W2 = 3/4" WEEP NOTCH AT EACH END
W3 = 3" X 1/4" WEEP HOLES AT 2" FROM EACH END

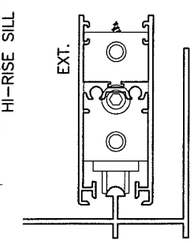

ACETAL WHEELS IN METALLIC HOUSING 'PABOSA' GTT-26/13-02A

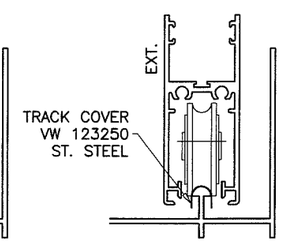

ST. STEEL WHEELS IN METALLIC HOUSING 'BSI' AR06BSS-IS1/4

SEP 07 2017

JAVAD AHMAD LICENSE No. 70582 STATE OF FLORIDA PROFESSIONAL ENGINEER

AL-FAROOQ CORPORATION
ENGINEERS & PRODUCT DEVELOPMENT
9360 SUNSET DRIVE, SUITE 220
MIAMI, FLORIDA 33173 (C.A.N. 3538)
TEL. (305) 264-8100 FAX. (305) 262-6978

COMP-ANL\W03-100ES

SERIES-4000 ALUM SLIDING GLASS DOOR (L.M.I.)

E.S. WINDOWS, LLC
3550 N.W. 49 STREET
MIAMI, FL. 33142
TEL. (305) 638-5151 FAX. (305) 638-5158

revisions:

no	date	by	description
L	07.31.15		GENERAL REV.
M	10.20.15		REV. PER RER COMMENTS
N	11.04.16		EDITORIAL CHANGES
O	09.05.17		UPDATED TO 2017 FBC

date: 11-08-03
scale: 1/2" = 1"
dr. by: TARIQ
chk. by:

drawing no. W03-100

sheet 4 of 7

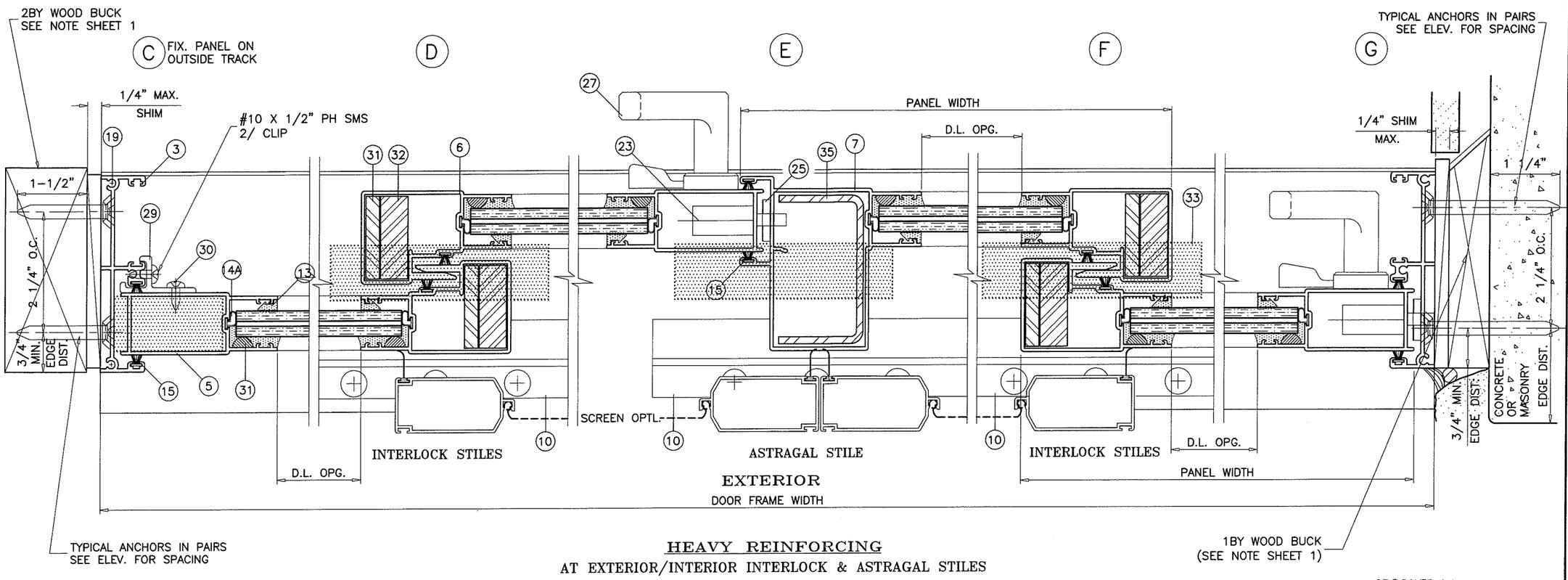

TYPICAL ANCHORS IN PAIRS
SEE ELEV. FOR SPACING

HEAVY REINFORCING

AT EXTERIOR/INTERIOR INTERLOCK & ASTRAGAL STILES

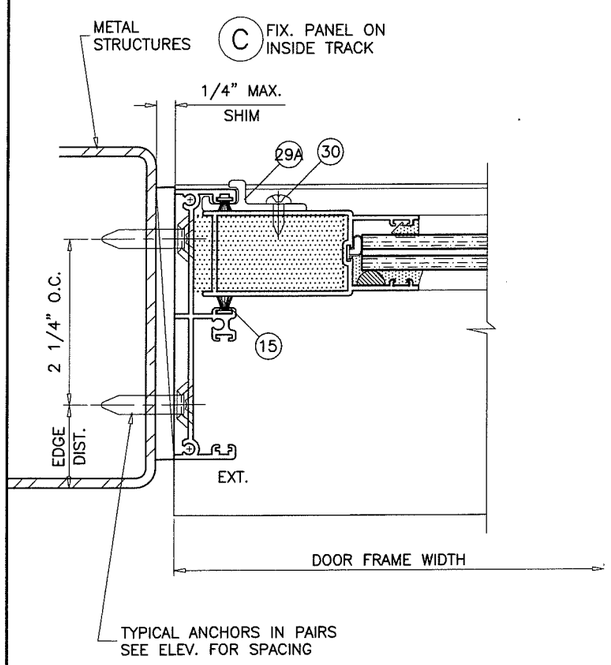

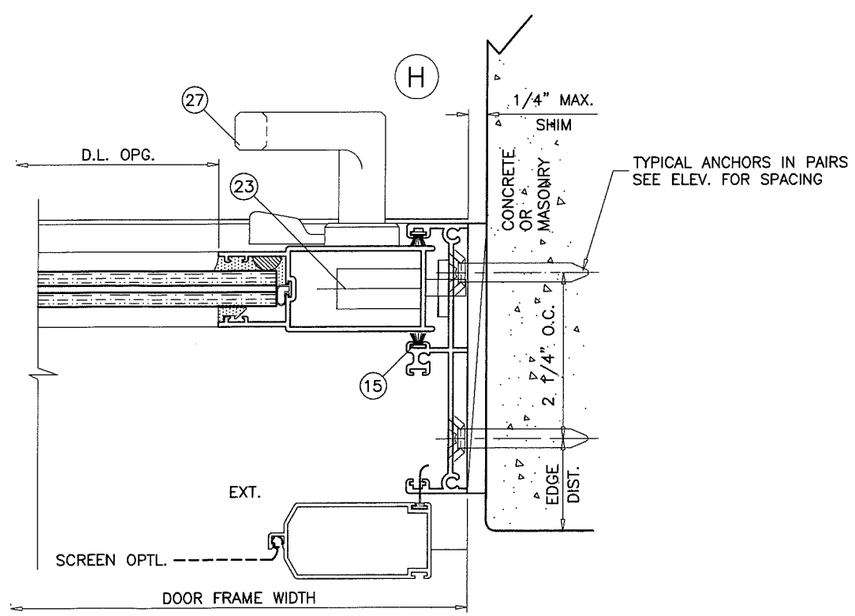

PRODUCT RENEWED
as complying with the Florida
Building Code
Acceptance No 18-0905.06
Expiration Date 3/18/24
By
Miami-Dade Product Control

PRODUCT REVISED
as complying with the Florida
Building Code
Acceptance No 17-0505.05
Expiration Date 3/18/19
By
Miami-Dade Product Control

SEP 07 2017

JAVAD AHMAD
LICENSE
No. 70582
STATE OF FLORIDA
PROFESSIONAL ENGINEER

AL-FAROOQ CORPORATION
ENGINEERS & PRODUCT DEVELOPMENT
9360 SUNSET DRIVE, SUITE 220
MIAMI, FLORIDA 33173 (C.A.N. 3538)
TEL. (305) 264-8100 FAX. (305) 262-6978
COMP-ANL\W03-100ES

SERIES-4000 ALUM SLIDING GLASS DOOR (L.M.I.)

E.S. WINDOWS, LLC
3550 N.W. 49 STREET
MIAMI, FL. 33142
TEL. (305) 638-5151 FAX. (305) 638-5158

revisions:

no	date	by	description
L	07.31.15		GENERAL REV.
M	10.20.15		REV. PER RER COMMENTS
N	11.04.16		EDITORIAL CHANGES
O	09.05.17		NO CHANGE THIS SHEET

date: 11-08-03
scale: 1/2" = 1"
dr. by: TARIQ
chk. by:

drawing no.
W03-100

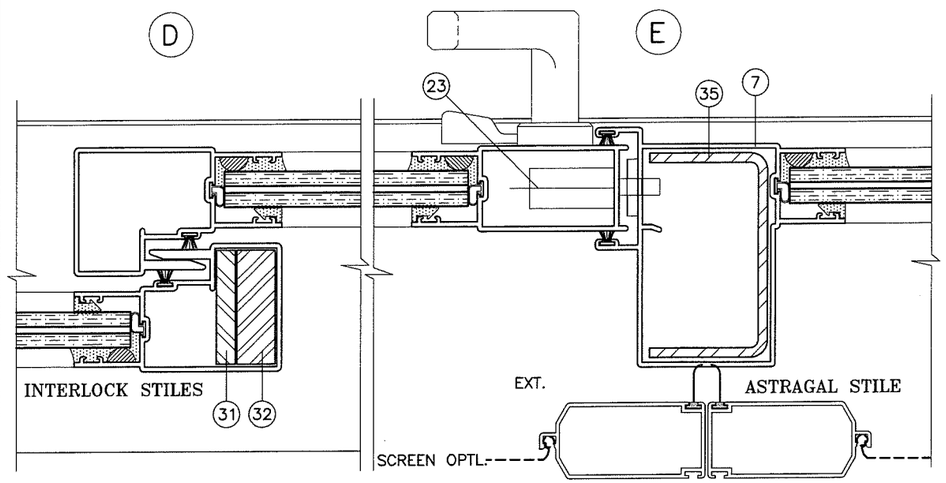

MEDIUM REINFORCING

AT EXT. INTERLOCK & ASTRAGAL STILES

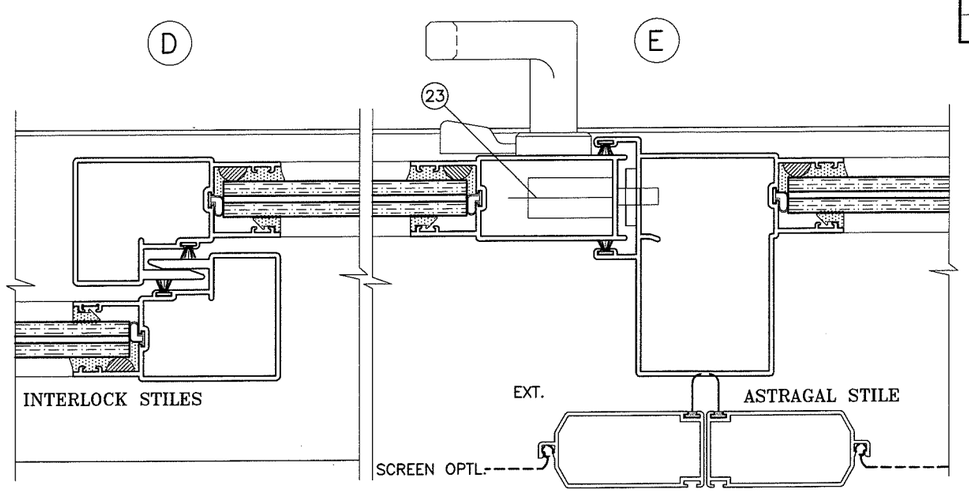

NO REINFORCING

ITEM #	PART #	QUANTITY	DESCRIPTION	MATERIAL	MANF./SUPPLIER/REMARKS
1	ES-4001-1	1	FRAME HEAD	6063-T6	-
2	ES-4002-1	1	STD. FRAME SILL	6063-T6	-
2A	-	1	HI-RISE FRAME SILL	6063-T6	-
3	ES-4003-1	1	FRAME JAMB	6063-T6	-
4	ES-4004-1	2/ PANEL	TOP AND BOTTOM RAIL	6063-T6	-
5	ES-4005-1	AS REQD.	LOCK STILE	6063-T6	-
6	ES-4006-1	AS REQD.	INTERLOCK	6063-T6	-
7	ES-4007-1	AS REQD.	FEMALE ASTRAGAL	6063-T6	-
8	ES-4008	AS REQD.	TOP & BOTTOM RAIL STIFFENER	6063-T6	-
9	ES-4009	2/ PANEL	PANEL GUIDE (TOP ONLY)	CELCON	NOT SHOWN
10	ES-4010	2/ PANEL	RETAINER CLIP, 6" LONG	6063-T6	-
13	27-445	AS REQD.	GLAZING WEDGE GASKET	EPDM	DUROMETER 75±5 SHORE A, SOLUCIONESENCAUCHO
14	27-448	AS REQD.	BOTTOM RAIL GLASS STOP	EPDM	DUROMETER 68±5 SHORE A, SOLUCIONESENCAUCHO
14A	27-449	AS REQD.	TOP RAIL & STILES GLASS STOP	EPDM	DUROMETER 75±5 SHORE A, SOLUCIONESENCAUCHO
15	W23241NK	AS REQD.	STILE & JAMB W'STRIPPING	-	GLASS PANELS, ULTRAFAB
16	Q26647DK	AS REQD.	TOP RAIL W'STRIPPING	-	GLASS PANELS, ULTRAFAB
17	ES-4015	AS REQD.	BOTTOM RAIL W'STRIPPING	VINYL	GLASS PANELS
19	#10X1-1/4" PH SMS	8/ PANEL	PANEL ASSY SCREWS	-	GLASS PANELS
19A	#10X1" FH SMS	2/ CORNER	FRAME ASSY SCREWS	-	-
20	GTT-26/13-02A	2/ MOV. PANEL	TANDEM ACETAL WHEELS IN METALLIC HOUSING	-	PABOSA
20A	AR06BSS-ISI/4	2/ MOV. PANEL	TANDEM ST. STEEL WHEELS IN METALLIC HOUSING	-	BSI
21	#10X1-1/4" PH SMS	1/ ROLLER	ROLLER INST. SCREWS	-	GLASS PANELS ONLY
23	2300-10SS	1/ MOV. PANEL	3 PLY METALLIC HOOK LOCK	ST. STEEL	-
24	-	2/ LOCK	LOCK INSTALLATION SCREW	-	#6-32 X 1/2" FH MS, ST. STEEL
25	537	1/ LOCK	LOCK STRIKE PLATE	PLATED STEEL	-
26	#10 PH SMS	2/ LOCK	STRIKE PLATE MOUNT. SCREW	-	NOT SHOWN
27	#623Z	1/ LOCK	INTERIOR AND EXTERIOR PULL	-	(3) #6-32 X 1/2" FH MS, ST. STEEL
28	ES4028	AS REQD.	SILL RISER	6063-T5	-
29	ES-4017	2/ PANEL	FIXED PANEL CLIP (OUTSIDE PANEL)	6063-T5	-
29A	ES-4020	2/ PANEL	FIXED PANEL CLIP (INSIDE PANEL)	6063-T5	FOR OXO DOORS
30	#10X1/2" PH SMS	2/ CLIP	FIXED PANEL CLIP FASTENER	-	-
31	-	AS REQD.	1/4" X 1-1/2" REINFORCING BAR	36 KSI STEEL	LENGTH = PANEL HT. - 6.5"
32	-	AS REQD.	1/2" X 1-1/2" REINFORCING BAR	36 KSI STEEL	LENGTH = PANEL HT. - 6.5"
33	P38024FK	AS REQD.	3" LONG SELF ADHESIVE PILE PAD	WOOL	AT HEAD AND SILL
34	-	2/ SIDE	BUMPON	NEOPRENE	-
35	-	AS REQD.	ASTRAGAL REINFORCING	36 KSI STEEL	LENGTH = PANEL HT. - 14"

PRODUCT RENEWED
as complying with the Florida
Building Code
Acceptance No 18-0905.06
Expiration Date 3/18/24
By Ishwar L. Chand
Miami Dade Product Control

PRODUCT REVISED
as complying with the Florida
building Code
Acceptance No 17-0505.05
Expiration Date 3/18/19
By Ishwar L. Chand
Miami Dade Product Control

SEP 07 2017

JAVAD AHMAD
LICENSE
No. 70592
STATE OF FLORIDA
PROFESSIONAL ENGINEER

AL-FAROOQ CORPORATION
ENGINEERS & PRODUCT DEVELOPMENT
9360 SUNSET DRIVE, SUITE 220
MIAMI, FLORIDA 33173 (C.A.N. 3538)
TEL. (305) 264-8100 FAX. (305) 262-6978

COMP-ANL\W03-100ES

SERIES-4000 ALUM SLIDING GLASS DOOR (L.M.I.)

E.S. WINDOWS, LLC
3550 N.W. 49 STREET
MIAMI, FL. 33142
TEL. (305) 638-5151 FAX. (305) 638-5158

revisions:

no	date	by	description
L	07.31.15		GENERAL REV.
M	10.20.15		REV. PER RER COMMENTS
N	11.04.16		EDITORIAL CHANGES
O	09.05.17		NO CHANGE THIS SHEET

date: 11-08-03
scale: 1/2" = 1"
dr. by: TARIQ
chk. by:

drawing no.
W03-100

sheet 6 of 7

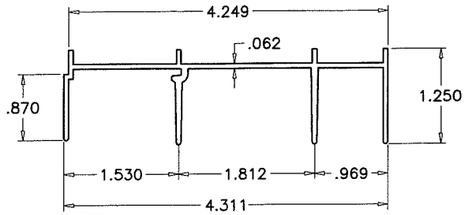

1 FRAME HEAD

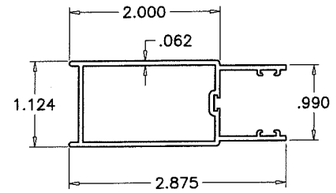

5 LOCK STILE

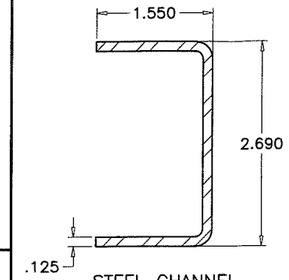

STEEL CHANNEL

35 ASTRAGAL REINFORCING

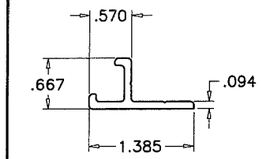

29 OUTSIDE PANEL FIXED PANEL CLIP

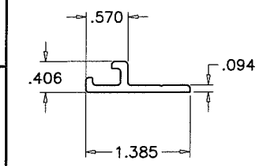

29A INSIDE PANEL FIXED PANEL CLIP

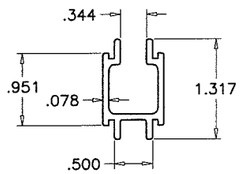

8 TOP/BOTTOM RAIL STIFFENER

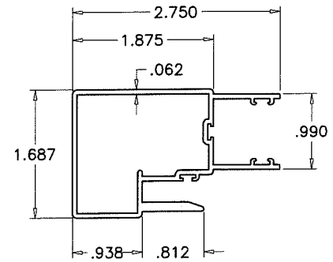

6 INTERLOCK STILE

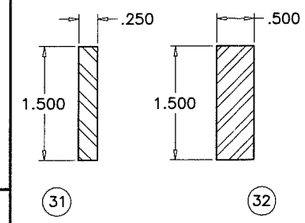

31 32 INTERLOCK REINFORCINGS

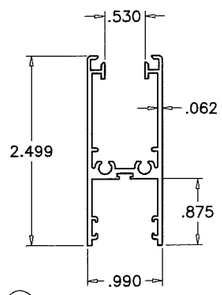

4 PANEL TOP/BOTTOM RAIL

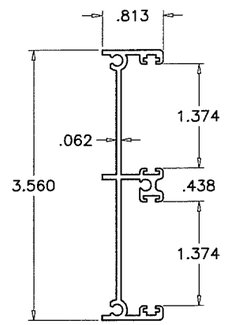

3 FRAME JAMB

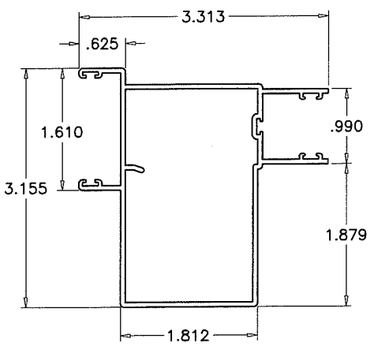

7 ASTRAGAL STILE

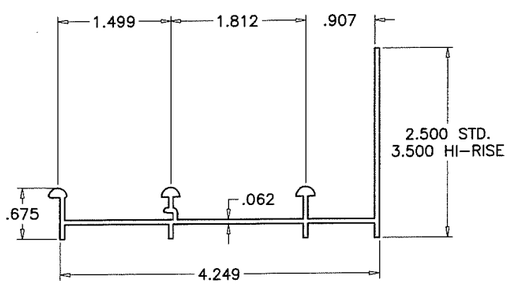

2 FRAME SILL

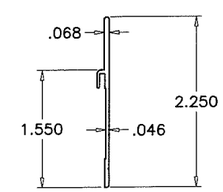

28 SILL RISER

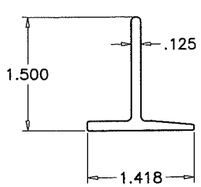

10 RETAINER CLIP

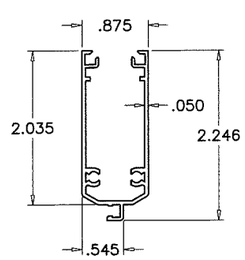

SCREEN TOP/BOTTOM RAIL

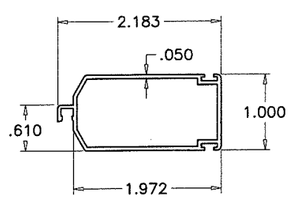

SCREEN STILE

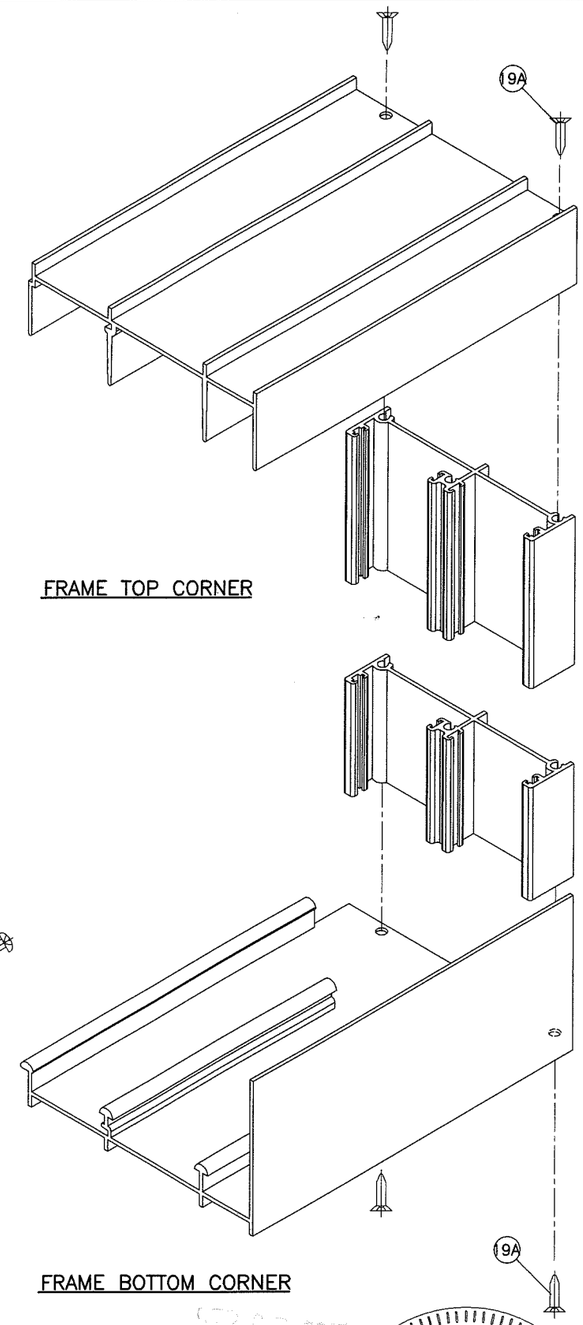

FRAME TOP CORNER

FRAME BOTTOM CORNER

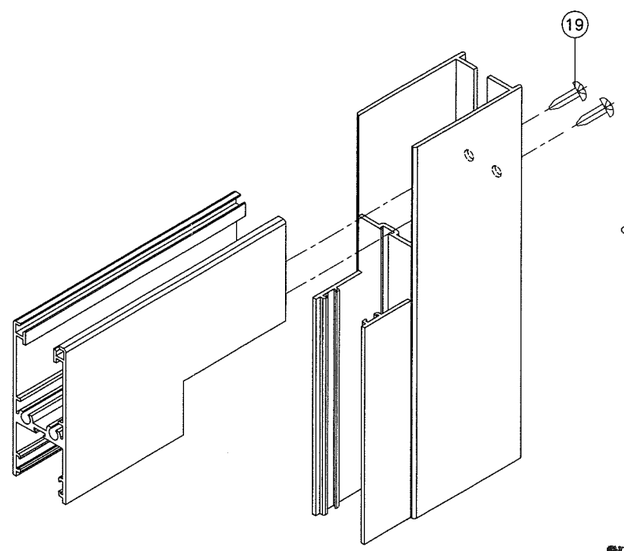

PANEL CORNER

PRODUCT RENEWED as complying with the Florida Building Code Acceptance No 18-0905.06 Expiration Date 3/18/2024 By Ishwar L. Chandra Miami-Dade Product Control

PRODUCT REVISED as complying with the Florida Building Code Acceptance No 17-0505.05 Expiration Date Mar 18, 2019 By Ishwar L. Chandra Miami-Dade Product Control

SEP 07 2017

JAVAD AHMAD LICENSE No. 70592 STATE OF FLORIDA PROFESSIONAL ENGINEER

AL-FAROOQ CORPORATION
ENGINEERS & PRODUCT DEVELOPMENT
9360 SUNSET DRIVE, SUITE 220
MIAMI, FLORIDA 33173 (C.A.N. 3638)
TEL. (305) 264-8100 FAX. (305) 262-6978

COMP-ANL\W03-100ES

SERIES-4000 ALUM SLIDING GLASS DOOR (L.M.I.)

E.S. WINDOWS, LLC
3550 N.W. 49 STREET
MIAMI, FL. 33142
TEL. (305) 638-5151 FAX. (305) 638-5158

revisions:

no	date	by	description
L	07.31.15		GENERAL REV.
M	10.20.15		NO CHANGE THIS SHEET
N	11.04.16		EDITORIAL CHANGES
O	09.05.17		NO CHANGE THIS SHEET

date: 11-08-03
scale: 1/2" = 1"
dr. by: TARIQ
chk. by:

drawing no. W03-100

sheet 7 of 7