MIAMI-DADE COUNTY
PRODUCT CONTROL SECTION
11805 SW 26 Street, Room 208
Miami, Florida 33175-2474
T (786) 315-2590 F (786) 315-2599
www.miamidade.gov/economy

DEPARTMENT OF REGULATORY AND ECONOMIC RESOURCES (RER)
BOARD AND CODE ADMINISTRATION DIVISION

NOTICE OF ACCEPTANCE (NOA)

WinDoor, Inc.
7500 Amsterdam Drive
Orlando, Fl. 32832

SCOPE:

This NOA is being issued under the applicable rules and regulations governing the use of construction materials. The documentation submitted has been reviewed and accepted by Miami-Dade County RER -Product Control Section to be used in Miami Dade County and other areas where allowed by the Authority Having Jurisdiction (AHJ).

This NOA shall not be valid after the expiration date stated below. The Miami-Dade County Product Control Section (In Miami Dade County) and/or the AHJ (in areas other than Miami Dade County) reserve the right to have this product or material tested for quality assurance purposes. If this product or material fails to perform in the accepted manner, the manufacturer will incur the expense of such testing and the AHJ may immediately revoke, modify, or suspend the use of such product or material within their jurisdiction. RER reserves the right to revoke this acceptance, if it is determined by Miami-Dade County Product Control Section that this product or material fails to meet the requirements of the applicable building code.

This product is approved as described herein, and has been designed to comply with the Florida Building Code, including the High Velocity Hurricane Zone.

DESCRIPTION: Series "450" Aluminum Inswing glazed Doors w/wo Sidelites - Impact

APPROVAL DOCUMENT: Drawing No.**18-106D**, titled "Series 450 Inswing Doors & Sidelites", sheets 1, 1.1, 1.2, 2, 2.1, 2.2, 3, 3.1, 4, 5, 6, 7 7.1 and 7.2 of 7, prepared by Al-Farooq Corporation, dated 10-27-06 and last revised on SEP 09, 2018 signed and sealed by Javad Ahmad, P.E., bearing the Miami-Dade County Product Control Revision stamp with the Notice of Acceptance number and expiration date by the Miami-Dade County Product Control Section.

MISSILE IMPACT RATING: Large and Small Missile Impact

Limitations:

1. See Design Pressure ratings in sheets **1.1**, **5**, **6**, **7** and **7.1** for unit sizes Vs lock options, mullion type, door/ sidelite, glass / sill types and anchors. Lower Design Pressure shall control.
2. For mulled units lower Design pressure of doors or mullion shall control for entire assembly.
3. Exterior Design Pressure= +50.0 PSF w/ threshold (sill type S-I). Sills (threshold) types SS-1 & SS-2 are not rated for water infiltration. See thresholds (sills) and glass type **A1** (True muntin) limitations notes, in sheet **6**.
4. See Partial 7/16" & 1" Composite panels in sheet **6**. Narrow stile sidelites are limited to **18**" or less.
5. The frame are of alternate size must not exceed 125 ft^2, nor panel tested area and max. Panel height.

LABELING: Each unit shall bear a permanent label with the manufacturer's name or logo, city, state and series and following statement: "Miami-Dade County Product Control Approved", noted herein.

RENEWAL of this NOA shall be considered after a renewal application has been filed and there has been no change in the applicable building code negatively affecting the performance of this product.

TERMINATION of this NOA will occur after the expiration date or if there has been a revision or change in the materials, use, and/or manufacture of the product or process. Misuse of this NOA as an endorsement of any product, for sales, advertising or any other purposes shall automatically terminate this NOA. Failure to comply with any section of this NOA shall be cause for termination and removal of NOA.

ADVERTISEMENT: The NOA number preceded by the words Miami-Dade County, Florida, and followed by the expiration date may be displayed in advertising literature. If any portion of the NOA is displayed, then it shall be done in its entirety.

INSPECTION: A copy of this entire NOA shall be provided to the user by the manufacturer or its distributors and shall be available for inspection at the job site at the request of the Building Official.

This NOA **revises** NOA **#17-1011.11**(PLA) consists of this page 1 and evidence pages E-1, E-2 & E-3, as well as approval document mentioned above.

The submitted documentation was reviewed by **Ishaq I. Chanda, P.E.**

MIAMI-DADE COUNTY APPROVED

10/22/18

NOTICE OF ACCEPTANCE: EVIDENCE SUBMITTED

1. Evidence submitted in previous NOA

A. DRAWINGS

1. Drawing No.**W06-73 Rev J**, titled "Series 450 Inswing Doors & Sidelites", sheets 1, 1.1, 1.2, 2, 2.1, 2.2, 3, 3.1, 4, 5, 6, 7, 7.1 and 7.2 of 7, prepared by Al-Farooq Corporation, dated 10/27/06 and last revised on 09/21/17, signed and sealed by Javad Ahmad, P.E.

B. TESTS

1. None.

C. CALCULATIONS

1. Mullion analysis, complying with **FBC 5th Edition (2014)** and **FBC 6th Edition (2017)**, prepared by Al Farooq Corporation, dated 09/29/17, signed and sealed by Javad Ahmad, P.E.

D. QUALITY ASSURANCE

1. Miami Dade Department of Regulatory and Economic Resources (RER).

E. MATERIAL CERTIFICATIONS

1. Notice of Acceptance No. **17-0712.03** issued to Eastman Chemical Company (MA) for the"**Saflex CP - Saflex and Saflex HP Composite Glass Interlayers w/ PET Core"**, expiring on 12/11/18.
2. Notice of Acceptance No. **17-0712.05** issued to Eastman Chemical Company (MA) for their "**Saflex Clear and Color Glass Interlayers**", expiring on 05/21/21.

F. STATEMENTS

1. Statement letter of conformance with **FBC 5th Edition (2014)** and **FBC 6th Edition (2017)**, and of no financial interest, dated 08/30/17, signed and sealed by Javad Ahmad, P. E.

G. OTHER

1. This NOA revises NOA# 16-0329.03, expiring on 11/09/21

2. Evidence submitted in previous NOA

A. DRAWINGS

1. Manufacturer's die drawings and sections (Submitted under files below).
2. Drawing No.**W06-73 Rev I**, titled "Series 450 Inswing Doors & Sidelites", sheets 1, 1.1, 1.2, 2, 2.1, 2.2, 3, 3.1, 4, 5, 6, 7, 7.1 and 7.2 of 7, prepared by Al-Farooq Corporation, dated 10-27-06 and last revised on 03-22-16, signed and sealed by Javad Ahmad, P.E.

B. TESTS (Submitted under files **#16-0329.03/#14-1103.05/#12-0706.04/#11-1025.03/#09-0723.04**)

1. Test reports on: 1) Air Infiltration Test, per FBC, TAS 202-94
   2) Uniform Static Air Pressure Test, Loading per FBC TAS 202-94
   3) Water Resistance Test, per FBC, TAS 202-94(+50.0 PSF, sill S-I only)
   4) Large Missile Impact Test per FBC, TAS 201-94
   5) Cyclic Wind Pressure Loading per FBC, TAS 203-94
   6) Forced Entry Test, per FBC 2411 3.2.1, TAS 202-94

Along with manufacturer's parts and section drawing marked-up drawings of aluminum In swing / Outswing door w/wo sidelites, by Hurricane Testing Laboratory, Inc., Test Report No. **HTL-0080-0304-11** dated 11/28/2011 & **HTL-0080-0902-11**, signed and sealed by Vinu J. Abraham, P.E.

Ishaq I. Chanda

Ishaq I. Chanda, P.E.
Product Control Examiner
NOA No 18-0926.05
Expiration Date: November 09, 2021
Approval Date: November 01 , 2018

NOTICE OF ACCEPTANCE: EVIDENCE SUBMITTED

B. TESTS (continue)

Note: This test report has been revised by addendum letters, issued by Architectural Testing (Former Hurricane Testing Lab), dated 01/20/12 and 04/03/12, both signed and sealed by Vinu J. Abraham, P.E.

Along with manufacturer's parts and section drawing marked-up drawings of double aluminum outswing doors, issued by Architectural Testing, Test Report No(s) **B-5234.02-450-18** dated 12/19/2011, signed and sealed by Vinu J. Abraham, P.E.

2. Test reports on: 1) Air Infiltration Test, per FBC, TAS 202-94
   2) Uniform Static Air Pressure Test, Loading per FBC TAS 202-94
   3) Water Resistance Test, per FBC, TAS 202-94
   4) Large Missile Impact Test per FBC, TAS 201-94
   5) Cyclic Wind Pressure Loading per FBC, TAS 203-94
   6) Forced Entry Test, per FBC 2411 3.2.1, TAS 202-94.

Along with manufacturer's parts and section drawing marked-up drawings of aluminum In/out swing door w/sidelites, by Hurricane Testing Laboratory, Inc., Test Report No. **HTL-97055 (0080-912-97)** dated 09/23/97 thru 02/27/98 for specimen #1, 2, 3, 4 tested per PA202-94, specimen #4, 5A, 5B, 5C tested per PA201-94 & PA203-94, signed and sealed by Timothy S. Marshall, P.E.
Along with manufacturer's parts and section drawing marked-up drawings of aluminum out swing door w/sidelites, by Hurricane Testing Laboratory, Inc., Test Report No. **HTL-01071 (0080-0402-02)** dated 04/01/2002 tested per PA201-94 & PA203-94, signed and sealed by Vinu J. Abraham, P.E. (submitted in file # **09-0723.04**). Original tests conducted per SFBC, PA 201, 202 &203-94 now known as FBC, TAS 201, 202 & 203-94.

3. Reference Certified Testing Laboratories test report # CTLA **3056WA**, issued to CGI Windows & Doors Inc. pert TAS 201, 202 and 203-94 for specimen #1 thru #30 for laminated PVB glass, insulated PVB laminated glass with Duraseal and super spacers, signed and sealed by Ramesh C. Patel, P.E.

C. CALCULATIONS (Submitted under files #**14-1103.05**)

1. Anchor verification calculations and structural analysis, complying with FBC-2014(**5th Edition**), prepared by Al Farooq Corporation, dated 10/27/14 and last revised on AUG 27, 2015, signed and sealed by Javad Ahmad, P.E.
2. Glazing complies w/ ASTME-1300-02, -04 & -09.

D. QUALITY ASSURANCE

1. Miami Dade Department of Regulatory and Economic Resources (RER).

E. MATERIAL CERTIFICATIONS

1. Notice of Acceptance No. **14-0916.11** issued to Kuraray America, Inc. (former E.I. DuPont DeNemours & Co., Inc.) for the "**Sentry Glass ® Interlayer**", expiring on 07/4/17.
2. Notice of Acceptance No. **14–0423.15** issued to Eastman Chemical Company (MA) (Former Solutia, Inc.) for the "**Saflex CP - Saflex and Saflex HP Composite Glass Interlayers w/ PET Core**", expiring on 12/11/18.
3. Notice of Acceptance No. **15–1201.11** issued to Eastman Chemical Company (MA) (Former Solutia, Inc.) for the "**Saflex Clear and Color Glass Interlayers**", expiring on 05/21/21.

NOTICE OF ACCEPTANCE: EVIDENCE SUBMITTED

F. STATEMENTS

1. Statement letter of conformance to FBC 2014(**5th Edition**) and letter of no financial interest, prepared by Al Farooq Corporation, dated 10/03/14, signed and sealed by Javad Ahmad, P.E.
2. Lab compliance and addendum letters, as part of the above referenced test reports.

G. OTHER

1. This NOA **revises & renews # 14-1103.05**, expiring on November 09, 2021.
2. Hardware cut sheets verified and marked-up by the Architectural Testing (former Hurricane Testing lab).
3. Test proposal dated 12/16/14 approved by RER and Test proposal # **10-0940**, dated 11/17/10 approved by BNC.

1. New Evidence submitted.

A. DRAWINGS

1. Drawing No.**18-106D**, titled "Series 450 Inswing Doors & Sidelites", sheets 1, 1.1, 1.2, 2, 2.1, 2.2, 3, 3.1, 4, 5, 6, 7 7.1 and 7.2 of 7, prepared by Al-Farooq Corporation, dated 10-27-06 and last revised on SEP 09, 2018 signed and sealed by Javad Ahmad, P.E.

B. CALCULATIONS

1. None.

C. TESTS

1. None.

D. QUALITY ASSURANCE

1. Miami Dade Department of Regulatory and Economic Resources (RER).

E. MATERIAL CERTIFICATIONS

1. Notice of Acceptance No. **17-0808.02** issued to Kuraray America, Inc. (former E.I. DuPont DE Nemours & Co., Inc.) for the "**Sentry Glass ® Interlayer**", expiring on 07/4/23.
2. Notice of Acceptance No. **18–0301.06** issued to Eastman Chemical Company (MA) (Former Solutia, Inc.) for the "**Saflex CP - Saflex and Saflex HP Composite Glass Interlayers w/ PET Core**", expiring on 12/11/23.
3. Notice of Acceptance No. **17–0712.05** issued to Eastman Chemical Company (MA) (Former Solutia, Inc.) for the "**Saflex Clear and Color Glass Interlayers**", expiring on 05/21/21.

F. STATEMENTS

1. Statement letter of conformance to FBC 2017 (**6th Edition**) and letter of private label, prepared by Al Farooq Corporation, dated 10/03/14, signed and sealed by Javad Ahmad, P.E.

G. OTHER

1. This NOA **revises** NOA **#17-1011.11(PLA)**, expiring on November 09, 2021.
2. Private Label Agreement (PLA) between CGI Windows and Doors, Inc. and Windoor Inc. signed by Dean M. Ruark, P.E, Vice President on behalf of both companies.
3. Reference CGI NOA # 17-1011.11 (#16-0329.03) expiring November 09, 2021.

Ishaq I. Chanda

Ishaq I. Chanda, P.E.
Product Control Examiner
NOA No 18-0926.05
Expiration Date: November 09, 2021
Approval Date: November 01 , 2018

TYPICAL ELEVATIONS

SERIES 450 ALUMINUM INSWING GLAZED DOORS WITH OR WITHOUT SIDELITES

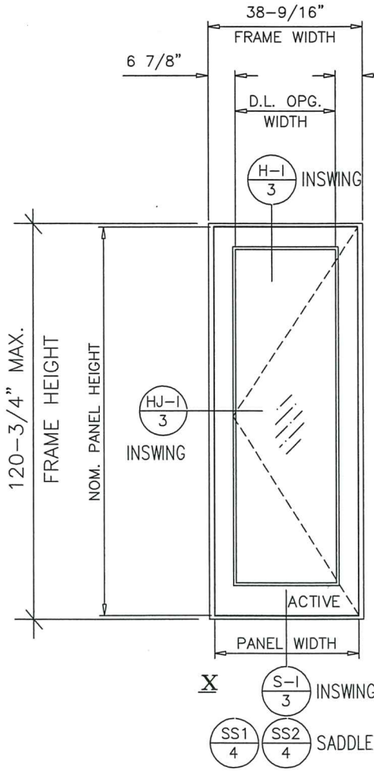

X

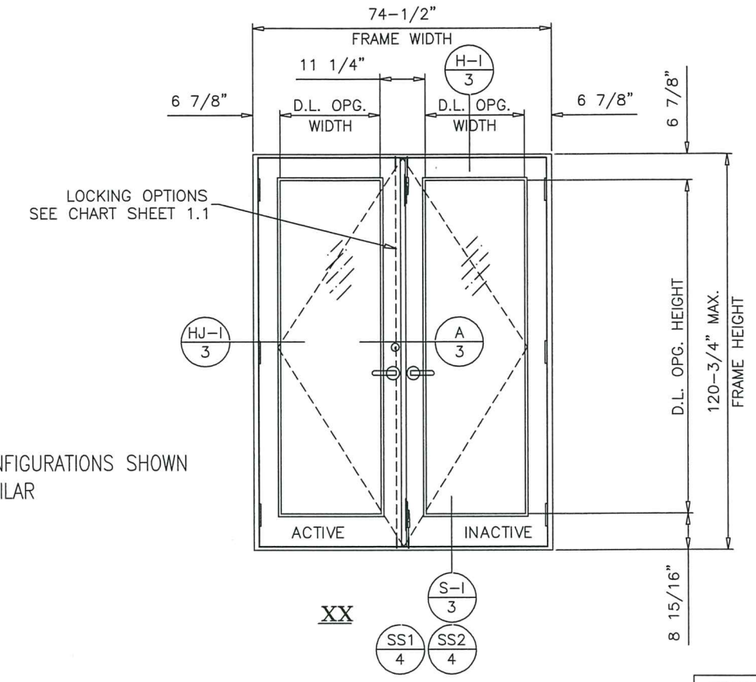

XX

LH CONFIGURATIONS SHOWN
RH SIMILAR

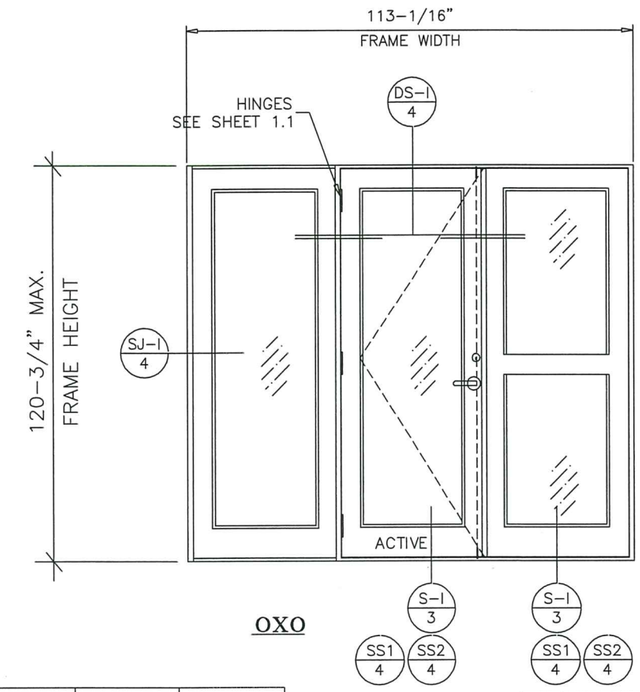

OXO

LEGEND

—I – INSWING DOOR DETAIL

– ITEM DESCRIPTION (see sheet 2 of 7)

PRODUCT REVISED
as complying with the Florida Building Code
Acceptance No. 18-0926.05
Expiration Date Nov 09, 2021
By Ishaq I. Chanda
Manager Product Control

FRAME HEIGHT = PANEL HEIGHT + 1-7/8" (STD. THRESHOLD)
FRAME HEIGHT = PANEL HEIGHT + 1-5/8" (ADA THRESHOLD)
FRAME WIDTH = PANEL WIDTH + 2.8125"

THIS PRODUCT HAS BEEN DESIGNED AND TESTED TO COMPLY WITH THE REQUIREMENTS OF THE 2017 (6TH EDITION) FLORIDA BUILDING CODE INCLUDING HIGH VELOCITY HURRICANE ZONE (HVHZ).

FRAME WIDTH (X)	FRAME WIDTH (XX)	DOOR/SIDELITE PANEL WIDTH	D.L. OPG. WIDTH
26-9/16"	50-1/2"	23-3/4"	12-3/4"
32-9/16"	62-1/2"	29-3/4"	18-3/4"
38-9/16"	74-1/2"	35-3/4"	24-3/4"
44-9/16"	86-1/2"	41-3/4"	30-3/4"

FRAME HEIGHT	DOOR/SIDELITE PANEL * HEIGHT	D.L. OPG. HEIGHT
82-3/4"	80-7/8"	67-3/8"
84-3/4"	82-7/8"	69-3/8"
90-3/4"	88-7/8"	75-3/8"
96-3/4"	94-7/8"	81-3/8"
102-3/4"	100-7/8"	87-3/8"
108-3/4"	106-7/8"	93-3/8"
114-3/4"	112-7/8"	99-3/8"
120-3/4"	118-7/8"	105-3/8"

* HEIGHTS FOR STD. THRESHOLD

STEPS TO USE CHARTS
SEE SHEETS 6 & 7.

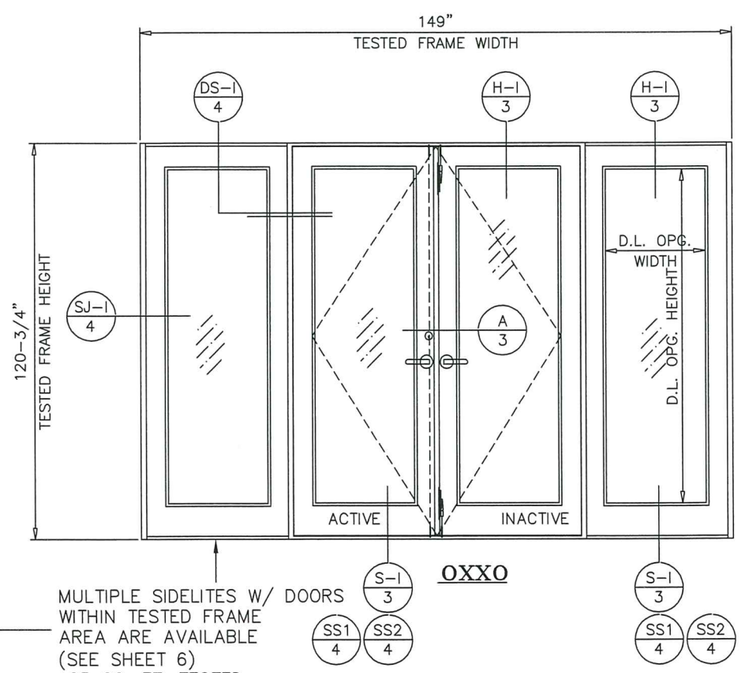

OXXO

MULTIPLE SIDELITES W/ DOORS WITHIN TESTED FRAME AREA ARE AVAILABLE (SEE SHEET 6)
125 SQ. FT. TESTED FRAME AREA

NOTE:
EGRESS REQUIREMENTS TO BE REVIEWED BY BUILDING OFFICIAL.

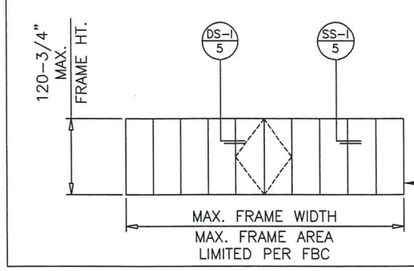

STEPS TO USE CHARTS:

1. DETERMINE WIND LOAD BASED ON PROVISIONS OF 2014/2017 FLORIDA BLDG. CODE.
2. DETERMINE WATER INFILTRATION REQUIREMENTS BASED ON PROVISIONS OF FBC.
3. SELECT A DOOR SYSTEM I.E. INSWING AND TYPE OF THRESHOLD FROM SHEET 6 AND LOCK OPTIONS FROM SHEET 1.1.
4. CHECK THE ALLOWABLE EXTERIOR AND INTERIOR LOADS FROM APPROPRIATE CHARTS ON SHEETS 1.1, 5 & 6.
   THE ALLOWABLE LOADS MUST MEET OR EXCEED THE DESIGN LOADS REQUIREMENTS.
5. SELECT AND CHECK ANCHORS TO MEET LOAD. (SEE SHEETS 7 & 7.1)
6. FOR MULLED SIDELITE REFER TO MULLION CAPACITY ON SHEET 5.
7. LOWER DESIGN PRESSURE FROM LOCKS CHART, THRESHOLD TYPE, PANEL PERFORMANCE CHART, MULLION PERFORMANCE CHART AND ANCHOR CAPACITY CHARTS AT MULLION AND MTG. STILE ENDS SHALL CONTROL THE ENTIRE SYSTEM.
8. MATERIALS INCLUDING BUT NOT LIMITED TO STEEL/METAL SCREWS, THAT COME INTO CONTACT WITH OTHER DISSIMILAR MATERIALS SHALL MEET THE REQUIREMENTS OF THE FLORIDA BUILDING CODE.

DWG. NO.: 18-106D

JAVAD AHMAD
LICENSE
No. 70592
SEP 19 2018
STATE OF FLORIDA
PROFESSIONAL ENGINEER

WinDoor, Inc.
7500 Amsterdam Drive
Orlando, FL. 32832
Tel. (407) 481-8400 Fax. (407) 481-5566

product : Series 450 INSWING Doors & Sidelites

date : 10-27-06 | sheet 1 of 7

TYPICAL ELEVATIONS

LOCK OPTIONS AND CAPACITY

	10A		10AA		10B		10C & 10CC		10 F	
FRAME HEIGHT	EXT.(+)	INT.(−)	EXT.(+)	INT.(−)	EXT.(+)	INT.(−)	EXT.(+)	INT.(−)	EXT.(+)	INT.(−)
84−3/4"	90.0	90.0	100.0	110.0	100.0	110.0	65.0	65.0	100.0	110.0
96−3/4"	90.0	90.0	100.0	110.0	100.0	110.0	65.0	65.0	90.0	90.0
108−3/4"	−	−	100.0	110.0	100.0	110.0	−	−	90.0	90.0
120−3/4"	−	−	70.0	70.0	70.0	70.0	−	−	70.0	70.0

10A : COPPER CREEK W/ WINDOOR 3 POINT
10AA : BALDWIN W/ WINDOOR 3 POINT
10B : REGENT COMMERCIAL 3 POINT
10C : BALDWIN SINGLE POINT LOCK
10CC : COPPER CREEK SINGLE POINT LOCK
10F : SURFACE MOUNTED LOCK

LEGEND

—I − INSWING DOOR DETAIL

□ − ITEM DESCRIPTION (see sheet 2 of 7)

LH CONFIGURATIONS SHOWN
RH SIMILAR (SEE SHEET 1 FOR SIZES)

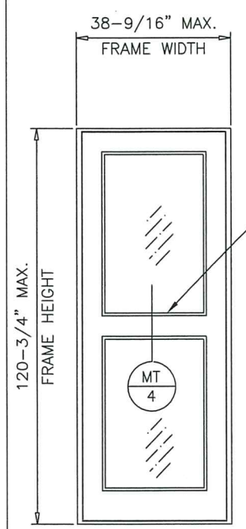

X OR O

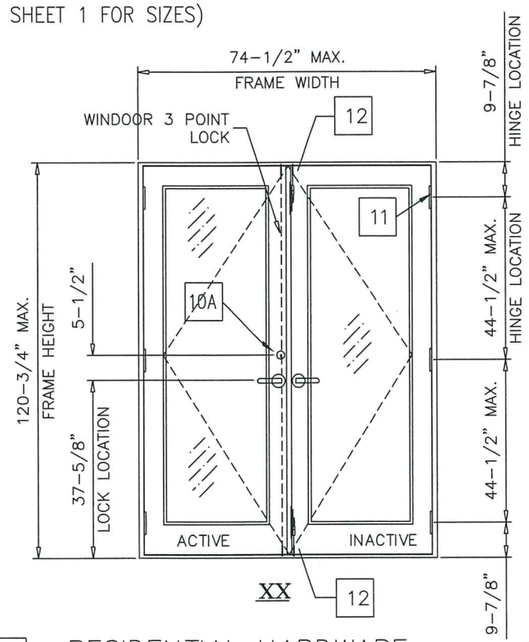

XX

RESIDENTIAL HARDWARE

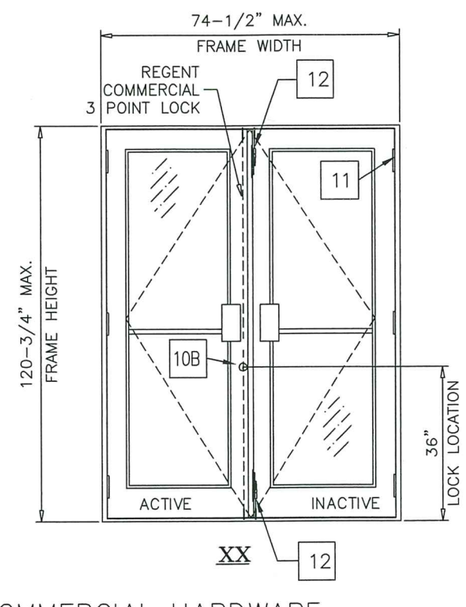

XX

COMMERCIAL HARDWARE

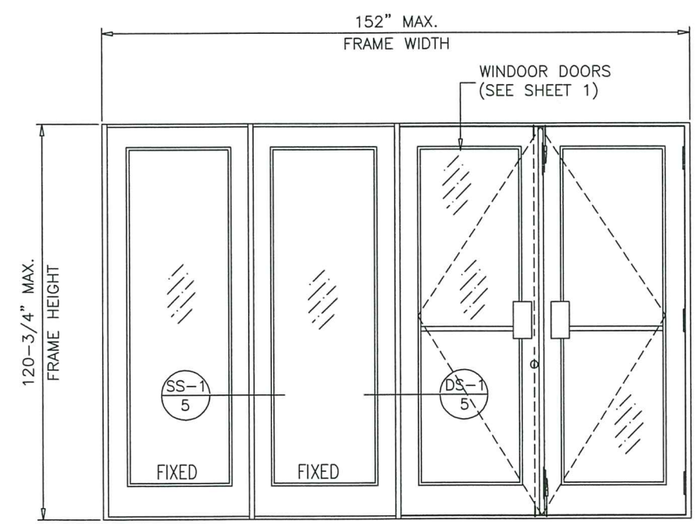

OOXX

OPTIONAL TRUE MUNTINS
DOOR OR SIDELITE

HINGE LOCATIONS		
MAX. FRAME HEIGHT	NO. REQD.	MAX. SPACING
UPTO 90−3/4"	3	35 1/2"
ABOVE 90−3/4" UPTO 120−3/4"	4	44 1/2"

DOORS WITH 3 HINGES LIMITED TO 100 PSF

FRAME HEIGHT = PANEL HEIGHT + 1−7/8" (STD. THRESHOLD)
FRAME HEIGHT = PANEL HEIGHT + 1−5/8" (ADA THRESHOLD)
FRAME WIDTH = PANEL WIDTH + 2−3/4"

HARDWARE DESCRIPTION

JAVAD AHMAD
LICENSE
No. 70592
SEP 19 2018
STATE OF FLORIDA
PROFESSIONAL ENGINEER

PRODUCT REVISED
as complying with the Florida Building Code
Acceptance No. 18-0926.05
Expiration Date 11/9/21
By Ishwar J. Chandra
Manager, Product Control

DWG. NO.: 18−106D

WinDoor, Inc.
7500 Amsterdam Drive
Orlando, FL. 32832
Tel. (407) 481−8400 Fax. (407) 481−5566

product : Series 450 INSWING Doors & Sidelites

date : 10−27−06 sheet 1.1 of 7

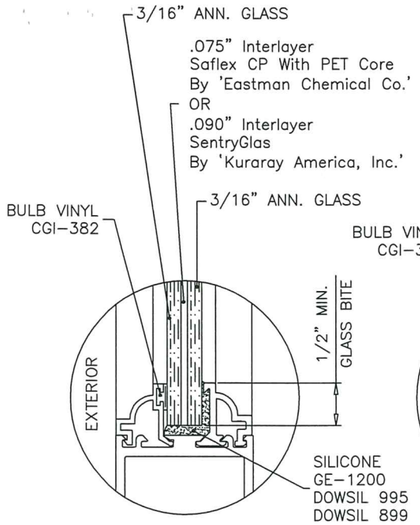

GLASS TYPE 'A'

7/16" OVERALL LAM. GLASS

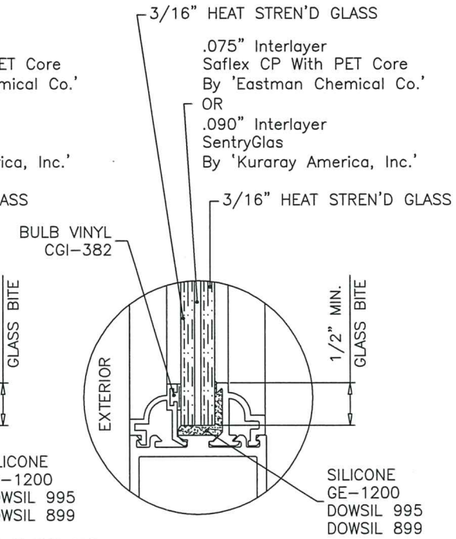

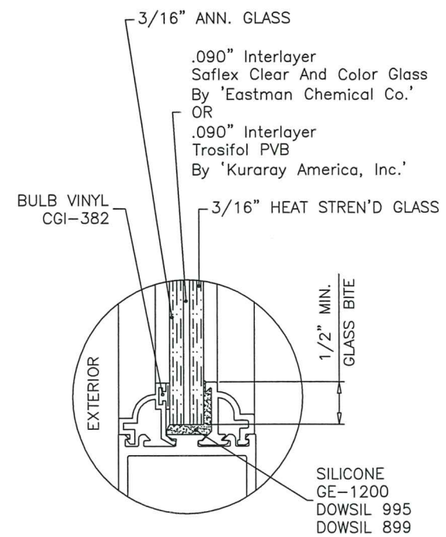

GLASS TYPE 'B'

7/16" OVERALL LAM. GLASS

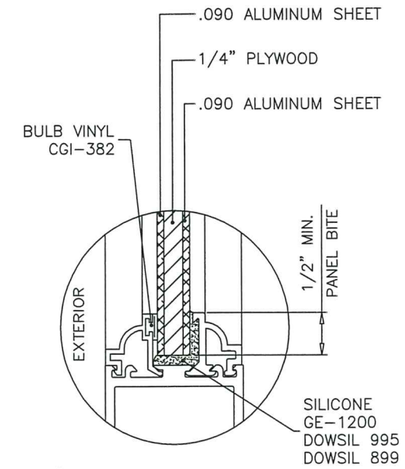

7/16" OVERALL COMPOSITE PANEL

GLAZING STOP OPTIONS

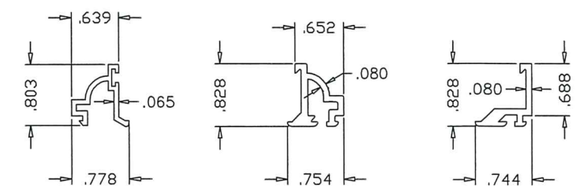

CGI-375 CGI-504 CGI-515

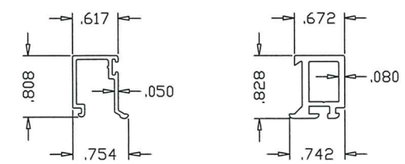

CGI-396 CGI-519

DOORS AND SIDELITES CAN BE GLAZED USING SQUARE OR OGEE GLAZING BEADS/ADAPTERS

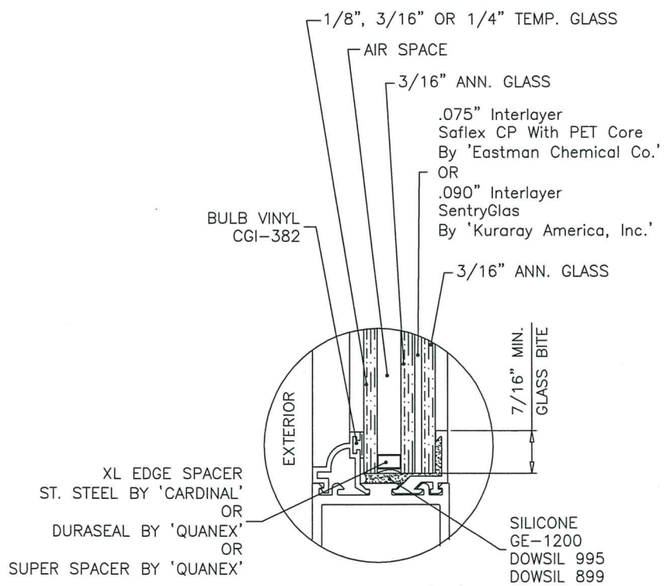

GLASS TYPE 'A1'

1" OVERALL INSUL. LAM. GLASS

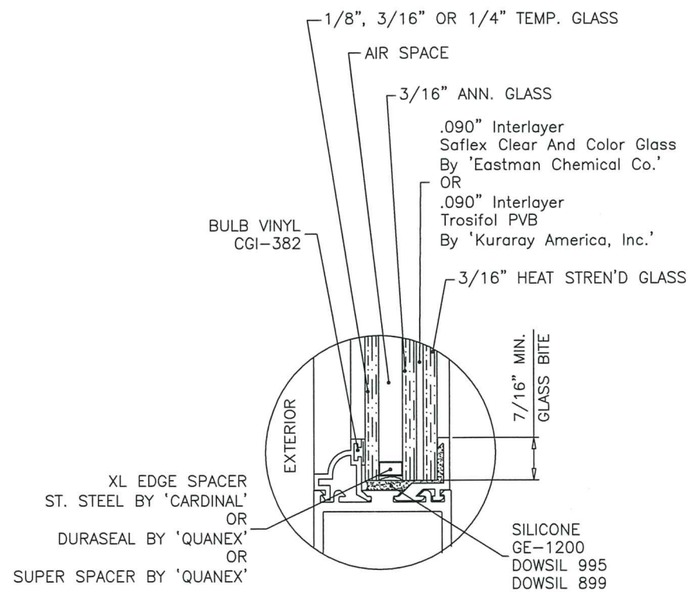

GLASS TYPE 'B1'

1" OVERALL INSUL. LAM. GLASS

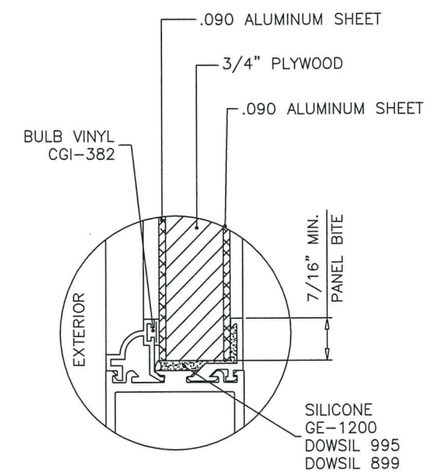

1" OVERALL COMPOSITE PANEL

GLAZING OPTIONS

PRODUCT REVISED
as complying with the Florida
Building Code
Acceptance No 18-0926.05
Expiration Date 11/9/21
By Ishwar L. Chandra
Miami-Dade Product Control

DWG. NO.: 18-106D

JAVAD AHMAD
LICENSE
No. 70592
SEP 19 2018
STATE OF FLORIDA
PROFESSIONAL ENGINEER

WinDoor, Inc.
7500 Amsterdam Drive
Orlando, FL. 32832
Tel. (407) 481-8400 Fax. (407) 481-5566

product : Series 450 INSWING Doors & Sidelites

date : 10-27-06 | sheet 1.2 of 7

BILL OF MATERIALS

ITEM	DESCRIPTION
1	#12 X 1 1/4" HEX HEAD S/S SMS (3 PER CORNER CONNECTION)
2A	3/8-16 FULLY THREADED CONTINUOUS ROD
2B	3/8-16 HEX NUT
2C	1 1/2" X 1 1/2" X 3/16"THK. ALUMINUM PLATE
3	SHEAR CLIP (EXT. NO. 506)
4	DOUBLE 9/32" DIA. JAMB INSTLL. HOLES AT 6" FROM ENDS & 24" O.C. MAX.
5	9/32" DIA. HEAD & SILL INSTLL. HOLES AT 6" FROM ENDS, 3 @ CENTER OF PAIRS SPACED 6" O.C. & 24" O.C. MAX.
6	#10 X 1" PH-PH-SS TEKS SCREW, @ 3" & 7" FROM ENDS & 19-3/8" O.C. MAX.
7	#14 X 3/4" HEX HEAD S/S TEKS SCREW AT 6" FROM ENDS & 24 3/16" O.C. MAX.
8	.320 HIGH WOOL PILE WITH CENTER FIN (ULTRAFAB # 3032)
9	.350 HIGH FOAM-TITE WEATHERSEAL (AMESBURY # 32011)
10	ACTIVE PANEL LOCK OPTIONS (SEE SHEET 1.1 FOR LIMITS)
10A	WINDOOR CUSTOM 3 POINT LOCK 4503PL, CONSISTING OF (2) WINDOOR CUSTOM END BOLTS (TOP & BOTTOM), ATTACHED WITH #10 X 3/4" PH SMS, (1) WINDOOR CUSTOM INTERIOR LINKAGE MECHANISM, (1) DEADBOLT BY COPPER CREEEK SERIES E MODEL D82410.
10AA	WINDOOR CUSTOM 3 POINT LOCK 4503PL, CONSISTING OF (2) WINDOOR CUSTOM END BOLTS (TOP & BOTTOM), ATTACHED WITH #10 X 3/4" PH SMS, (1) WINDOOR CUSTOM INTERIOR LINKAGE MECHANISM, (1) DEADBOLT BY BALDWIN SERIES 8200, KWIKSET 780.
10B	REGENT COMMERCIAL 2222 THREE POINT LOCK MECHANISM WITH MORTISE LOCK.
10C	SINGLE POINT LOCK (1) DEADBOLT BY BALDWIN SERIES 8200.
10CC	SINGLE POINT LOCK (1) DEADBOLT BY COPPER CREEK SERIES D82410.
10F	WINDOOR CUSTOM SURFACE MOUNTED SLIDE BOLTS WITH WINDOOR END BOLTS AT ACTIVE LEAF (AT TOP & BOTTOM) WITH BALDWIN SERIES 8200 DEAD BOLT.
11	HAGER 4 1/2" X 4" HINGE IN SOLID BRASS OR STAINLESS STEEL WINDOOR 4-1/2" X 4" HINGE IN ALUMINUM SECURED WITH (8) #12-24 X 1/2" F.H. M.S. (3 PER PANEL UP TO 7'-6 3/4" HIGH) (4 PER PANEL OVER 7'-6 3/4")
12	WINDOOR FLUSHBOLT AT TOP & BOTTOM OF INACTIVE LEAF, HOUSING ATTACHED TO PANEL STILE WITH #10 X 3/4" PH SMS, ACTIVATOR ATTACHED WITH #8 X 1/2" PH SMS.
13	SEE SHEET 1.2 FOR GLAZING OPTIONS
14	SILICONE GE-1200, DOW 995, DOW 899
17	1/2" X 1/2" CONTINUOUS CLOSED CELL FOAM TAPE WITH ONE SIDE ADHESIVE
18	PLASTIC WEEP BAFFLE
19	7/8" X 5" X 1/8" THK. CONTINUOUS ALUMINUM SILL ANGLE ADAPTOR

EXT. = EXTRUSION LIST 500A, 501, 502, 503, 504, 507, 509, 510, 514, 515, 519, 539, & 540 ALL EXTRUSIONS ARE 6063-T6.

375, 396, 505, 508, 511 EXTRUSIONS ARE 6063-T5.

PRODUCT REVISED
as complying with the Florida
Building Code
Acceptance No. 18-0926.05
Expiration Date 11/9/21
By Ichung J. Chang
Miami-Dade Product Control

JAVAD AHMAD
LICENSE
No. 70592
SEP 19 2018
STATE OF FLORIDA
PROFESSIONAL ENGINEER

DWG. NO.: 18-106D

WinDoor, Inc.
7500 Amsterdam Drive
Orlando, FL. 32832
Tel. (407) 481-8400 Fax. (407) 481-5566

product : Series 450 INSWING Doors & Sidelites

date : 10-27-06 sheet 2 of 7

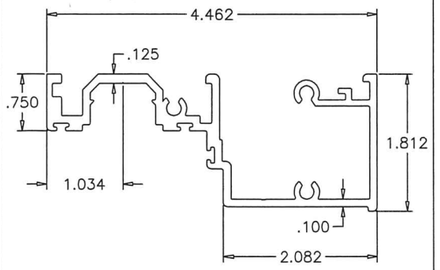

CGI–507
DOOR FRAME HEAD/SILL

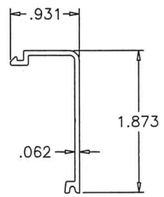

CGI–511
JAMB COVER

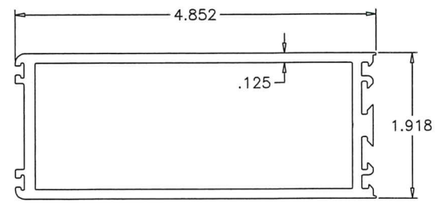

CGI–502
JAMB/LOCK/SIDELITE STILE

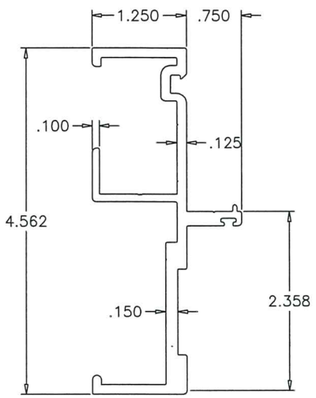

CGI–509
FRAME JAMB/MULLION

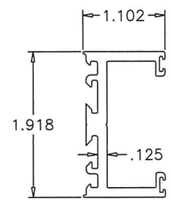

CGI–503
NARROW SIDELITE STILE

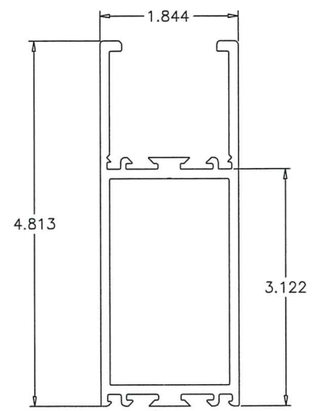

CGI–500A
TOP RAIL

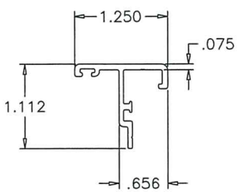

CGI–505
ASTRAGAL

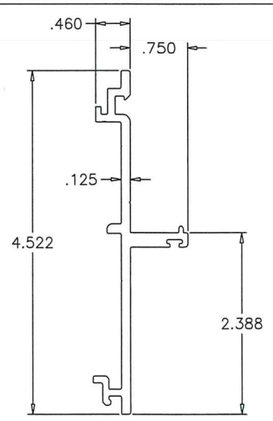

CGI–510
SIDELITE MULLION

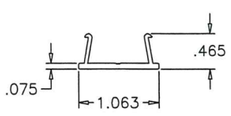

CGI–508
FRAME COVER

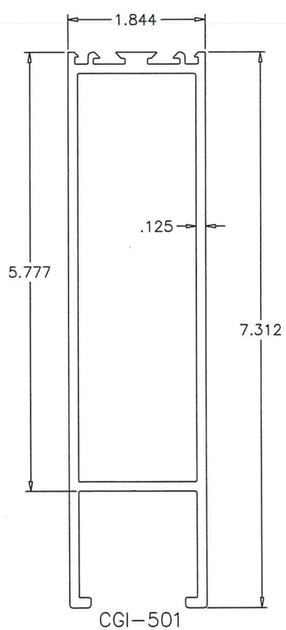

CGI–501
BOTTOM RAIL

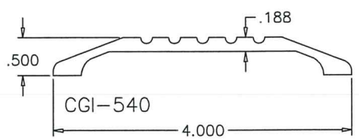

CGI–540

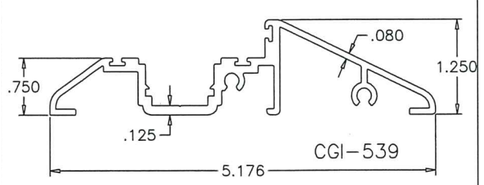

CGI–539

SADDLE THRESHOLDS

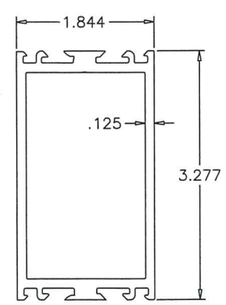

CGI–514
HORIZONTAL MUNTIN

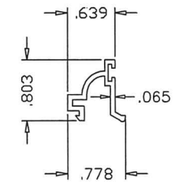

CGI–375

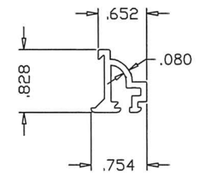

CGI–504

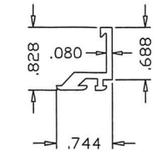

CGI–515

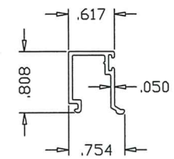

CGI–396

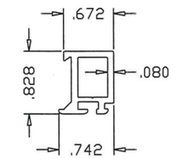

CGI–519

PRODUCT REVISED
as complying with the Florida
Building Code
Acceptance No. 18-0926.01
Expiration Date 11/9/21
By Miami-Dade Product Control

JAVAD AHMAD
LICENSE
No. 70592
SEP 19 2018
STATE OF FLORIDA
PROFESSIONAL ENGINEER

DWG. NO.: 18–106D

WinDoor, Inc.
7500 Amsterdam Drive
Orlando, FL. 32832
Tel. (407) 481–8400 Fax. (407) 481–5566

product : Series 450 INSWING Doors & Sidelites

date : 10–27–06 sheet 2.1 of 7

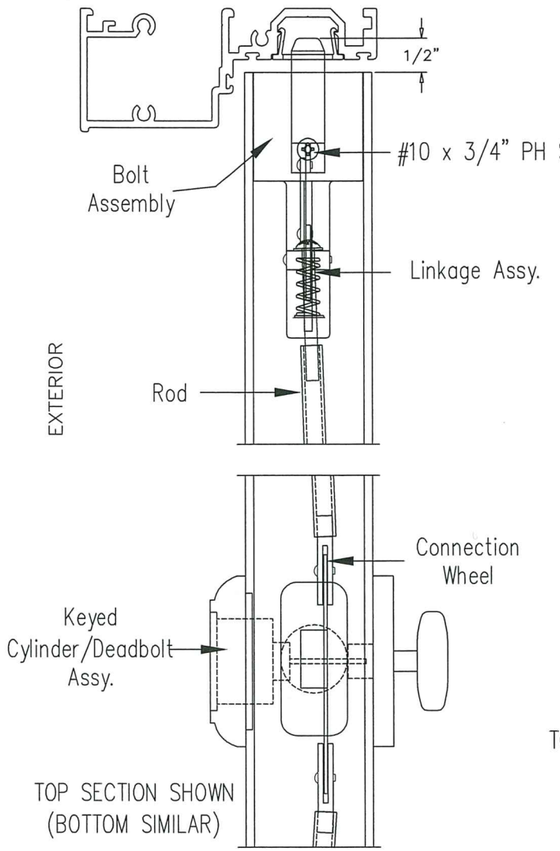

WINDOOR CUSTOM 3-POINT LOCK

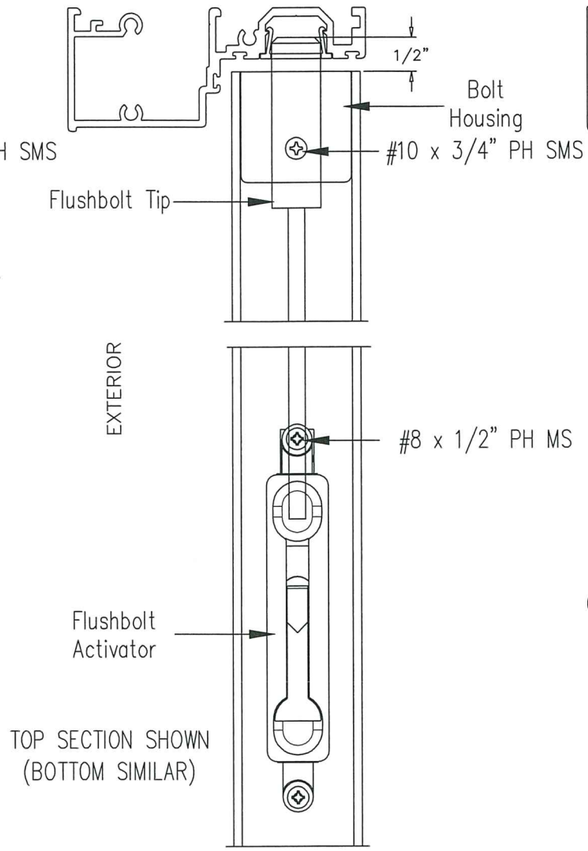

12 Flushbolts (Inactive Panel)

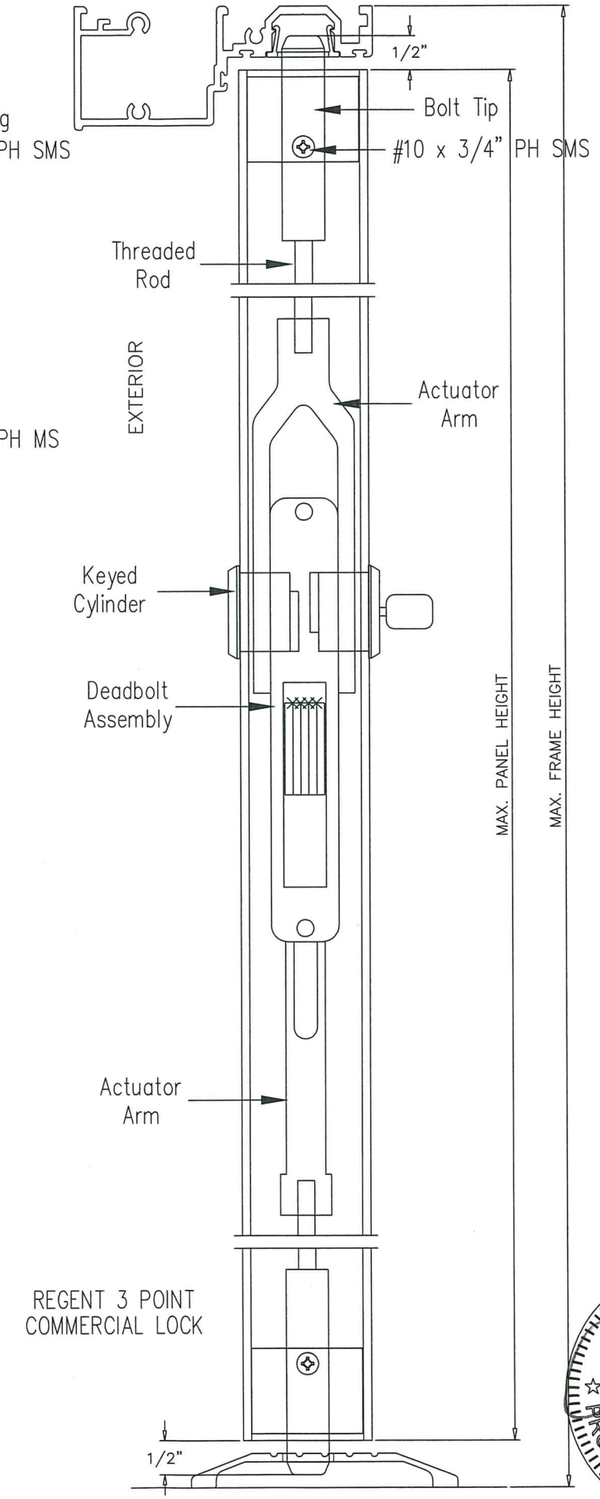

REGENT 3 POINT COMMERCIAL LOCK

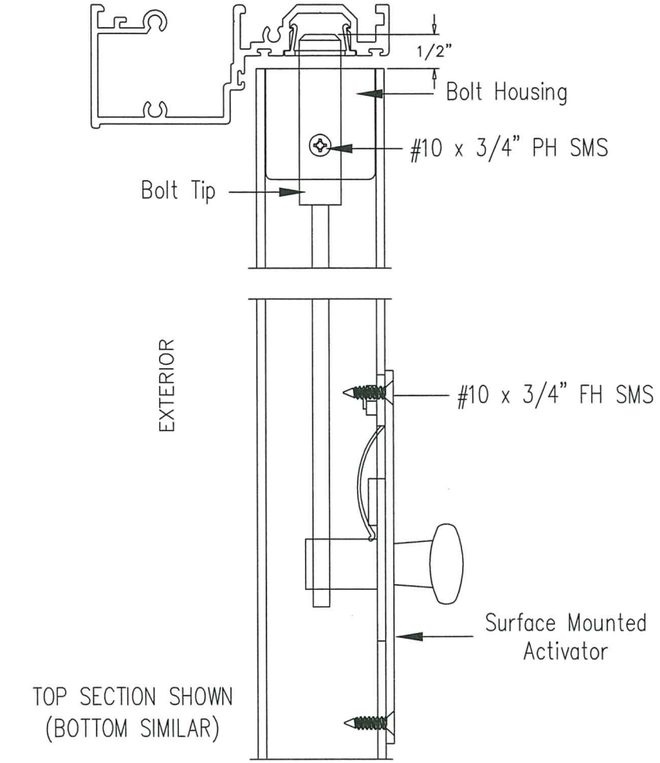

SURFACE MOUNT SLIDE BOLT WITH BALDWIN DEAD BOLT

PRODUCT REVIEWED as complying with the Florida Building Code
Acceptance No. 18-0926.05
Expiration Date 11/9/21
Florida State Product Control

DWG. NO.: 18-106D

JAVAD AHMAD LICENSE No. 70592 SEP 19 2013 STATE OF FLORIDA PROFESSIONAL ENGINEER

WinDoor, Inc.
7500 Amsterdam Drive
Orlando, FL. 32832
Tel. (407) 481-8400 Fax. (407) 481-5566

product : Series 450 INSWING Doors & Sidelites	
date : 10-27-06	sheet 2.2 of 7

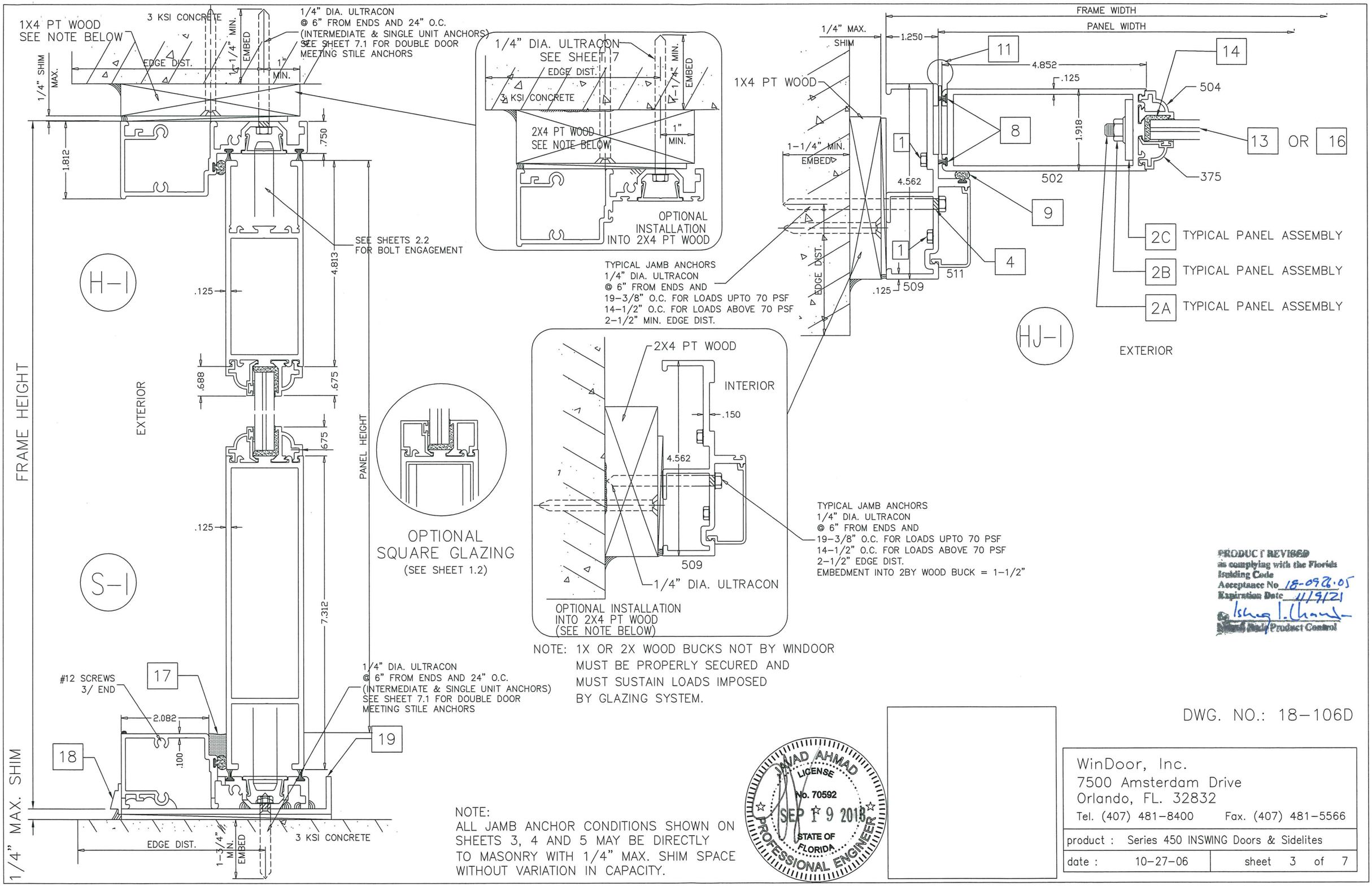

NOTE: 1X OR 2X WOOD BUCKS NOT BY WINDOOR MUST BE PROPERLY SECURED AND MUST SUSTAIN LOADS IMPOSED BY GLAZING SYSTEM.

NOTE:
ALL JAMB ANCHOR CONDITIONS SHOWN ON SHEETS 3, 4 AND 5 MAY BE DIRECTLY TO MASONRY WITH 1/4" MAX. SHIM SPACE WITHOUT VARIATION IN CAPACITY.

JAVAD AHMAD
LICENSE
No. 70592
SEP 19 2018
STATE OF FLORIDA
PROFESSIONAL ENGINEER

PRODUCT REVIEWED
as complying with the Florida
Building Code
Acceptance No. 18-0928.05
Expiration Date 11/9/21
Product Control

DWG. NO.: 18-106D

WinDoor, Inc.
7500 Amsterdam Drive
Orlando, FL. 32832
Tel. (407) 481-8400 Fax. (407) 481-5566

product : Series 450 INSWING Doors & Sidelites

date : 10-27-06 | sheet 3 of 7

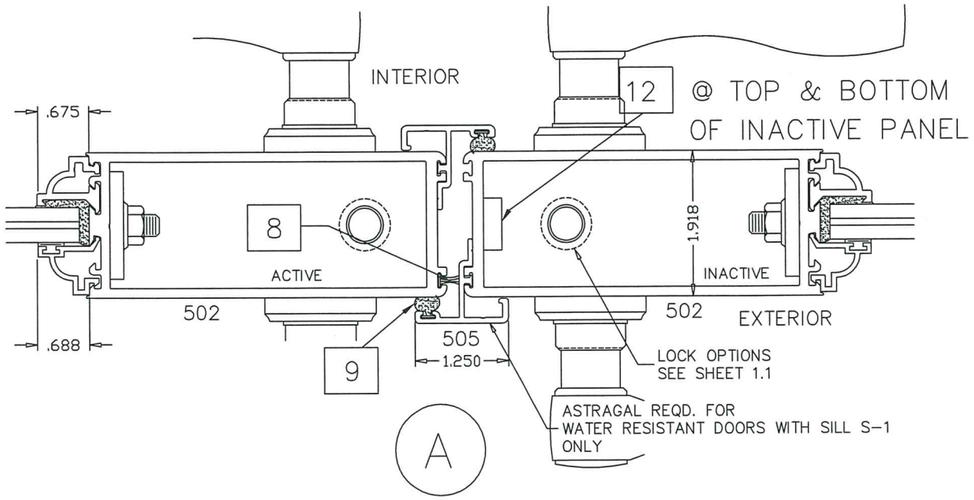

LOCK STILES WITH WATER RESISTANCE

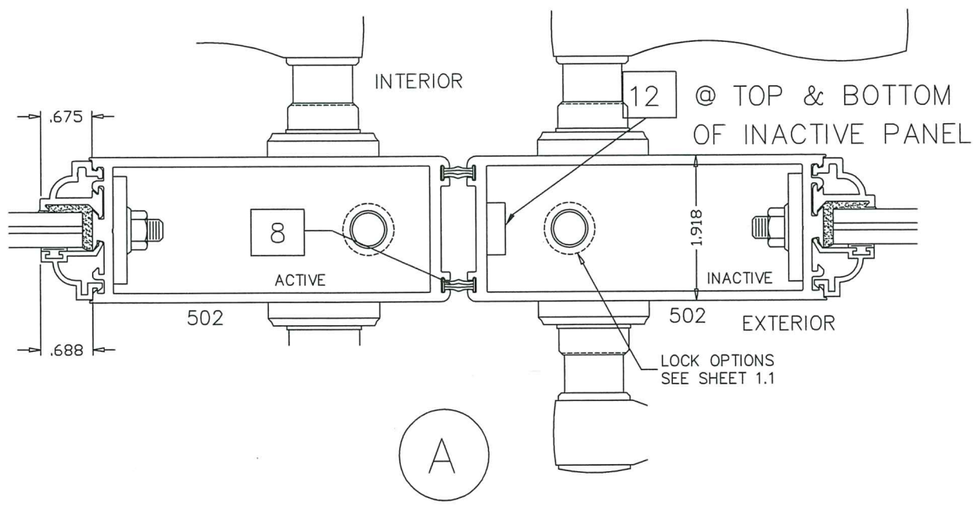

LOCK STILES WITHOUT WATER RESISTANCE

PRODUCT REVISED
as complying with the Florida
Building Code
Acceptance No 18-0926.05
Expiration Date 11/9/24
By Ishma I. Chunde
Miami-Dade Product Control

DWG. NO.: 18-106D

JAVAD AHMAD
LICENSE
No. 70592
SEP 19 2018
STATE OF FLORIDA
PROFESSIONAL ENGINEER

WinDoor, Inc.
7500 Amsterdam Drive
Orlando, FL. 32832
Tel. (407) 481-8400 Fax. (407) 481-5566

product : Series 450 INSWING Doors & Sidelites	
date : 10-27-06	sheet 3.1 of 7

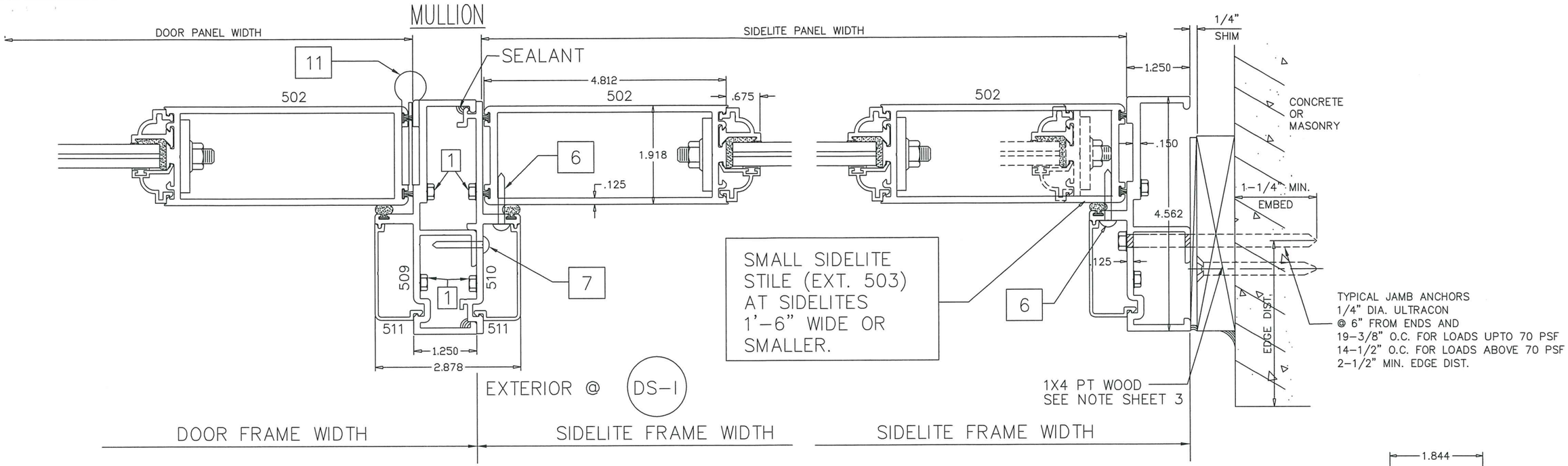

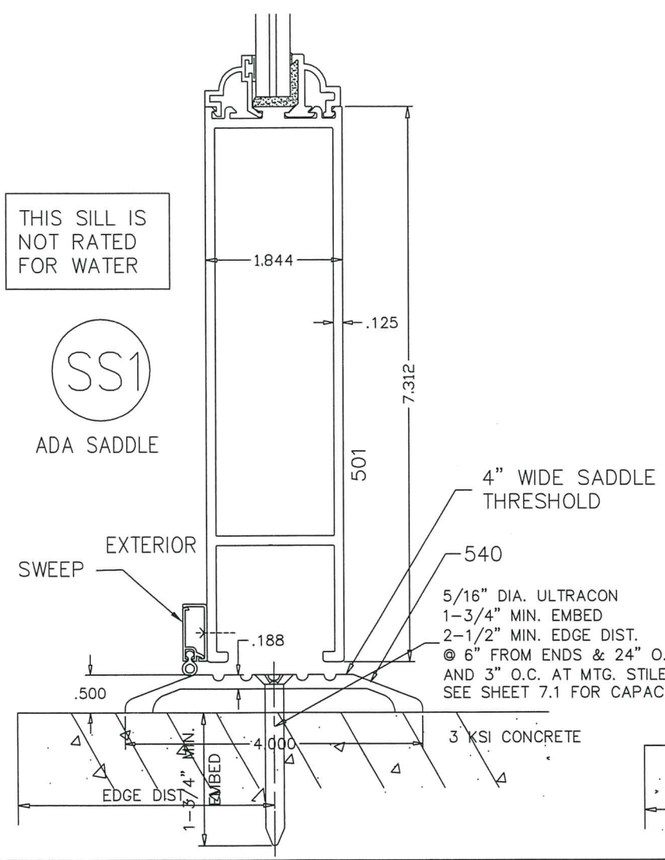

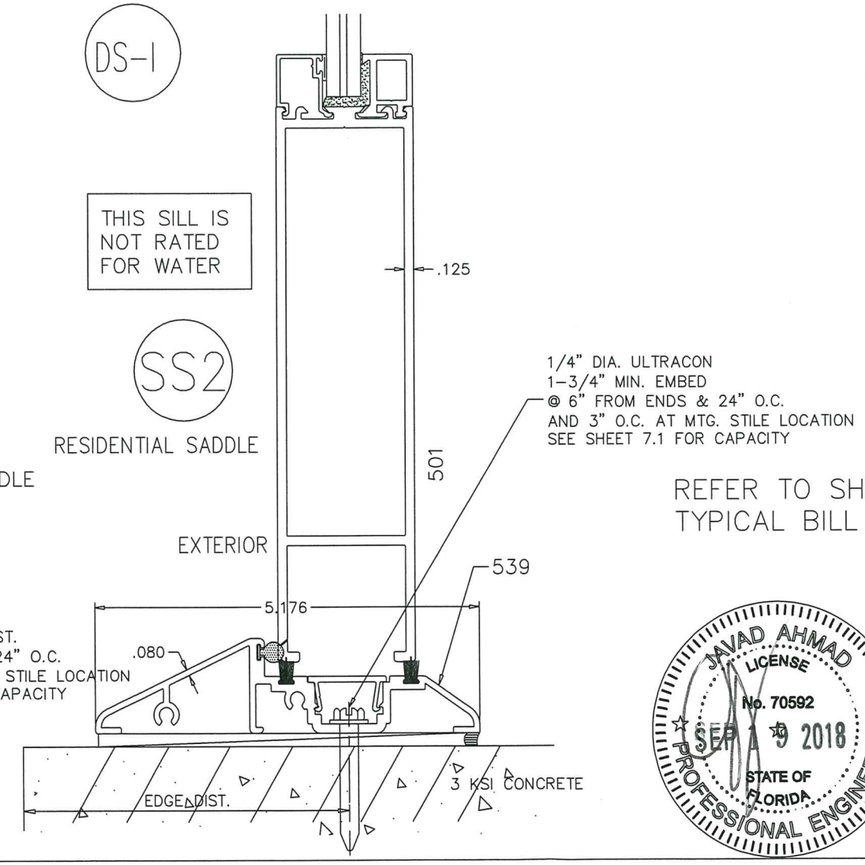

REFER TO SHEET 2 OF 7 FOR
TYPICAL BILL OF MATERIALS

DWG. NO.: 18-106D

JAVAD AHMAD
LICENSE
No. 70592
SEP 19 2018
STATE OF FLORIDA
PROFESSIONAL ENGINEER

PRODUCT REVISED
as complying with the Florida
Building Code
Acceptance No. 18-0926.05
Expiration Date 11/19/21
By: Ishwar I. Chand
Miami-Dade Product Control

WinDoor, Inc.
7500 Amsterdam Drive
Orlando, FL. 32832
Tel. (407) 481-8400 Fax. (407) 481-5566

product :	Series 450 INSWING Doors & Sidelites	
date : 10-27-06	sheet 4 of 7	

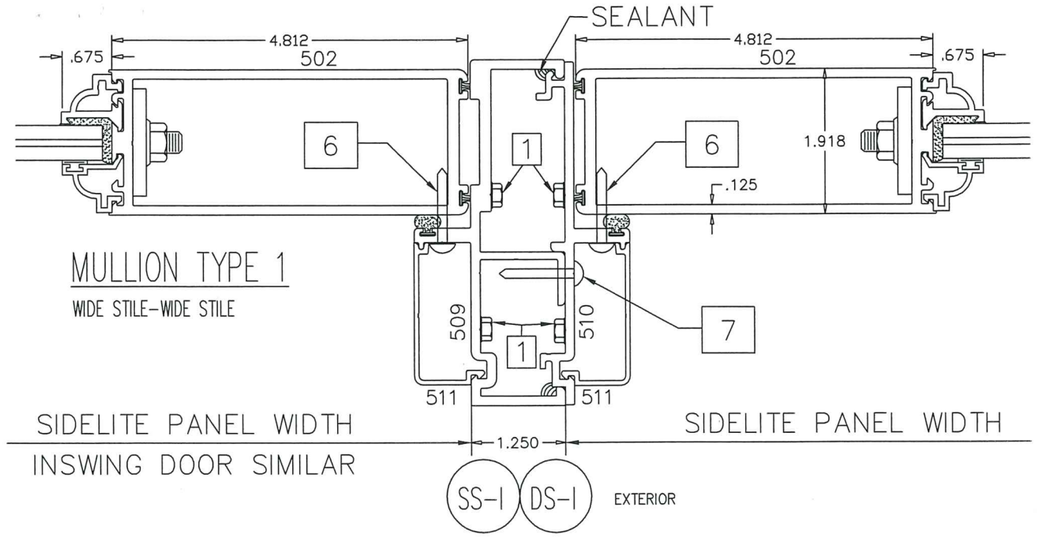

MULLION TYPE 1

WIDE STILE–WIDE STILE

INSWING DOOR SIMILAR

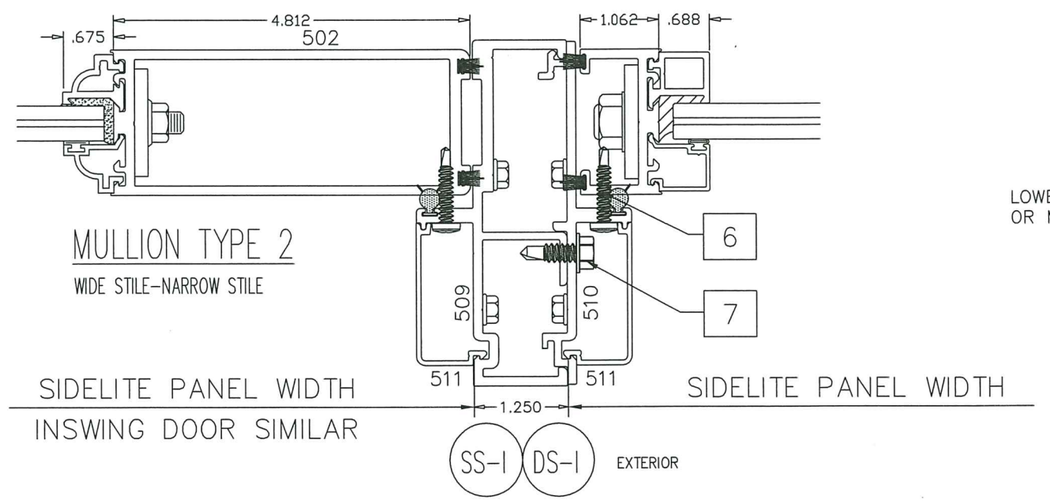

MULLION TYPE 2

WIDE STILE–NARROW STILE

INSWING DOOR SIMILAR

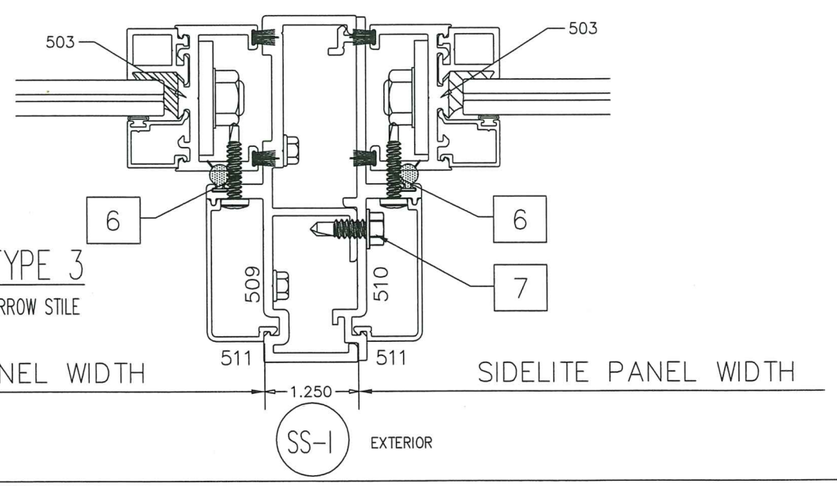

MULLION TYPE 3

NARROW STILE–NARROW STILE

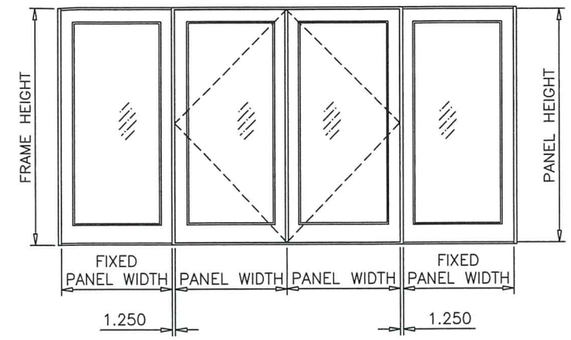

$$\text{WIDTH (W)} = \frac{\text{DOOR PANEL + FIXED PANEL}}{2} + 1.250$$

LOWER DESIGN LOAD FROM PANEL PERFORMANCE CHART ON SHEET 6 OR MULLION PERFORMANCE CHART ABOVE SHALL CONTROL

PRODUCT REVISED
as complying with the Florida
Building Code
Acceptance No. 18-0926.05
Expiration Date 11/9/21
Ishwar I. Chand
Manager, Statewide Product Control

REFER TO SHEET 2 OF 7 FOR TYPICAL BILL OF MATERIALS

MULLION PERFORMANCE CHART
DESIGN LOAD CAPACITY – PSF

NOMINAL DIMS.		MULL TYPE 1		MULL TYPE 2		MULL TYPE 3	
WIDTH (W)	FRAME HEIGHT	EXT.(+)	INT.(–)	EXT.(+)	INT.(–)	EXT.(+)	INT.(–)
1/6	82–3/4"	100.0	110.0	100.0	110.0	100.0	110.0
2/0		100.0	110.0	100.0	110.0	100.0	110.0
2/6		100.0	110.0	100.0	110.0	–	–
3/0		100.0	110.0	100.0	110.0	–	–
3/6		94.2	94.2	70.0	70.0	–	–
1/6	84–3/4"	100.0	110.0	100.0	110.0	100.0	110.0
2/0		100.0	110.0	100.0	110.0	100.0	110.0
2/6		100.0	110.0	100.0	110.0	–	–
3/0		100.0	110.0	100.0	110.0	–	–
3/6		94.2	94.2	–	–	–	–
1/6	90–3/4"	100.0	110.0	100.0	110.0	100.0	110.0
2/0		100.0	110.0	100.0	110.0	70.0	70.0
2/6		100.0	110.0	100.0	110.0	–	–
3/0		100.0	110.0	70.0	70.0	–	–
3/6		94.2	94.2	–	–	–	–
1/6	96–3/4"	100.0	110.0	100.0	110.0	100.0	110.0
2/0		100.0	110.0	100.0	110.0	70.0	70.0
2/6		100.0	110.0	100.0	110.0	–	–
3/0		100.0	110.0	–	–	–	–
3/6		59.9	59.9	–	–	–	–
1/6	102–3/4"	100.0	110.0	100.0	110.0	100.0	110.0
2/0		100.0	110.0	100.0	110.0	–	–
2/6		100.0	110.0	99.1	99.1	–	–
3/0		97.7	97.7	–	–	–	–
3/6		59.9	59.9	–	–	–	–
1/6	108–3/4"	100.0	110.0	100.0	110.0	100.0	110.0
2/0		100.0	110.0	100.0	103.0	–	–
2/6		97.0	97.0	70.0	70.0	–	–
3/0		81.9	81.9	–	–	–	–
1/6	114–3/4"	70.0	70.0	70.0	70.0	100.0	110.0
2/0		70.0	70.0	70.0	70.0	–	–
2/6		70.0	70.0	–	–	–	–
3/0		69.4	69.4	–	–	–	–
1/6	120–3/4"	70.0	70.0	70.0	70.0	70.0	70.0
2/0		70.0	70.0	70.0	70.0	–	–
2/6		70.0	70.0	–	–	–	–
3/0		59.3	59.3	–	–	–	–

JAWAD AHMAD
LICENSE
No. 70592
SEP 19 2018
STATE OF FLORIDA
PROFESSIONAL ENGINEER

DWG. NO.: 18–106D

WinDoor, Inc.
7500 Amsterdam Drive
Orlando, FL. 32832
Tel. (407) 481–8400 Fax. (407) 481–5566

product : Series 450 INSWING Doors & Sidelites

date : 10–27–06 sheet 5 of 7

PANEL PERFORMANCE CHART FOR SINGLE & DOUBLE DOORS & SINGLE SIDELITES
(NARROW STILE SIDELITES LIMITED TO 18" OR LESS)
DESIGN LOAD CAPACITY – PSF

NOMINAL DIMS.			GLASS TYPE 'A' 7/16" COMPOSITE PANELS 1" COMPOSITE PANELS		GLASS TYPE 'A1'		GLASS TYPES 'B' & 'B1'	
FRAME WIDTH (X)	FRAME WIDTH (XX)	FRAME HEIGHT	EXT. (+)	INT. (–)	EXT. (+)	INT. (–)	EXT. (+)	INT. (–)
26-9/16"	50-1/2"	82-3/4"	100.0	110.0	70.0	70.0	90.0	90.0
32-9/16"	62-1/2"		100.0	110.0	70.0	70.0	90.0	90.0
38-9/16"	74-1/2"		100.0	110.0	70.0	70.0	90.0	90.0
44-9/16"	86-1/2"		94.2	94.2	70.0	70.0	90.0	90.0
26-9/16"	50-1/2"	84-3/4"	100.0	110.0	70.0	70.0	90.0	90.0
32-9/16"	62-1/2"		100.0	110.0	70.0	70.0	90.0	90.0
38-9/16"	74-1/2"		100.0	110.0	70.0	70.0	90.0	90.0
44-9/16"	86-1/2"		94.2	94.2	70.0	70.0	90.0	90.0
26-9/16"	50-1/2"	90-3/4"	100.0	110.0	70.0	70.0	90.0	90.0
32-9/16"	62-1/2"		100.0	110.0	70.0	70.0	90.0	90.0
38-9/16"	74-1/2"		100.0	110.0	70.0	70.0	90.0	90.0
44-9/16"	86-1/2"		94.2	94.2	70.0	70.0	90.0	90.0
26-9/16"	50-1/2"	96-3/4"	100.0	110.0	70.0	70.0	90.0	90.0
32-9/16"	62-1/2"		100.0	110.0	70.0	70.0	90.0	90.0
38-9/16"	74-1/2"		100.0	110.0	70.0	70.0	90.0	90.0
44-9/16"	86-1/2"		59.9	59.9	70.0 *	70.0 *	–	–
26-9/16"	50-1/2"	102-3/4"	100.0	110.0	70.0 *	70.0 *	–	–
32-9/16"	62-1/2"		100.0	110.0	70.0 *	70.0 *	–	–
38-9/16"	74-1/2"		100.0	110.0	70.0 *	70.0 *	–	–
44-9/16"	86-1/2"		59.9	59.9	70.0 *	70.0 *	–	–
26-9/16"	50-1/2"	108-3/4"	100.0	110.0	70.0 *	70.0 *	–	–
32-9/16"	62-1/2"		100.0	110.0	70.0 *	70.0 *	–	–
38-9/16"	74-1/2"		100.0	110.0	70.0 *	70.0 *	–	–
26-9/16"	50-1/2"	114-3/4"	70.0	70.0	70.0 *	70.0 *	–	–
32-9/16"	62-1/2"		70.0	70.0	70.0 *	70.0 *	–	–
38-9/16"	74-1/2"		70.0	70.0	70.0 *	70.0 *	–	–
26-9/16"	50-1/2"	120-3/4"	70.0	70.0	70.0 *	70.0 *	–	–
32-9/16"	62-1/2"		70.0	70.0	70.0 *	70.0 *	–	–
38-9/16"	74-1/2"		70.0	70.0	70.0 *	70.0 *	–	–

LOADS SHOWN ABOVE ARE FOR INSTALLATIONS WHERE WATER INFILTRATION RESISTANCE IS NOT REQUIRED. LIMIT EXT.(+) LOADS TO 50.0 PSF FOR THRESHOLD (S-I) WHERE WATER INFILTRATION RESISTANCE IS REQUIRED. THRESHOLD (SS1) & (SS2) ARE NOT RATED FOR WATER INFILTRATION.

* GLASS LIMITED TO 8/0 DAYLITE OPENING. PANEL SIZES ABOVE 8/0 REQUIRE TRUE MUNTIN.

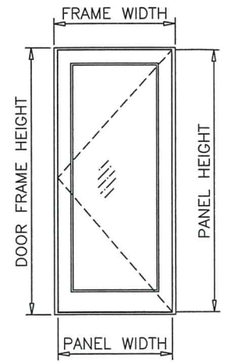

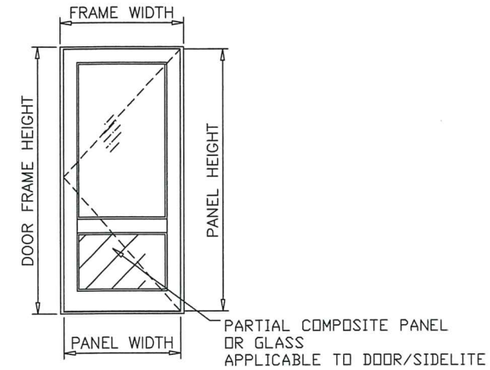

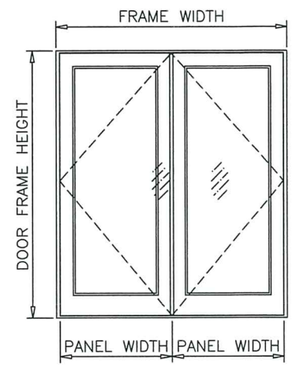

FOR SINGLE OR DOUBLE LEAF DOORS AND SINGLE SIDELITES CAPACITY
SEE CHART ON THIS SHEET
SEE BELOW FOR THRESHOLD TYPES
SEE SHEET 1.1 FOR LOCK CAPACITIES FOR SINGLE AND DOUBLE DOORS
SEE SHEET 5 FOR MULLION TYPES AND DESIGN LOAD CAPACITY
SEE CHART ON SHEET 7 FOR MULLION ANCHORS CAPACITY
SEE CHART ON SHEET 7.1 FOR MTG. STILE ANCHORS AT DOUBLE DOOR.
LOWEST VALUE FROM THESE CHARTS WILL APPLY TO ENTIRE ASSEMBLY.

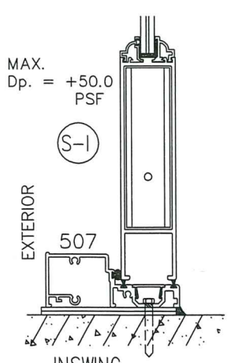

INSWING

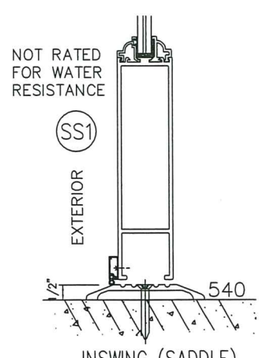

INSWING (SADDLE)

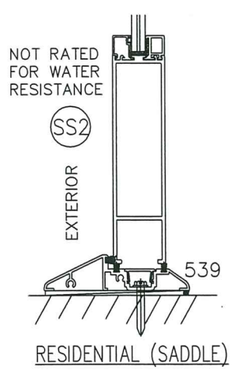

RESIDENTIAL (SADDLE)

NOTE:
GLASS CAPACITIES ON THIS SHEET ARE BASED ON ASTM E1300-09 (3 SEC. GUSTS) AND FLORIDA BUILDING COMMISSION DECLARATORY STATEMENT DCA05-DEC-219

PRODUCT REVIEWED
as complying with the Florida Building Code
Acceptance No. 18-0926.05
Expiration Date 11/9/21
Bureau of State Product Control

JAVAD AHMAD
LICENSE
No. 70592
SEP 19 2018
STATE OF FLORIDA
PROFESSIONAL ENGINEER

AL-FAROOQ CORPORATION
ENGINEERS & PRODUCT DEVELOPMENT
9360 SUNSET DRIVE, SUITE 220
MIAMI, FLORIDA 33173 (C.A.N. 3538)
TEL. (305) 264-8100 FAX. (305) 262-6978

COMP-ANL\18-106D-WDI

SERIES 450 INSWING DOOR AND SIDELITE

WinDoor, Inc.
7500 Amsterdam Drive
Orlando, FL. 32832
Tel. (407) 481-8400 Fax. (407) 481-5566

revisions:			
no	date	by	description

date: 10-27-06
scale: 1/2" = 1"
dr. by: HAMID
chk. by:

drawing no. 18-106D

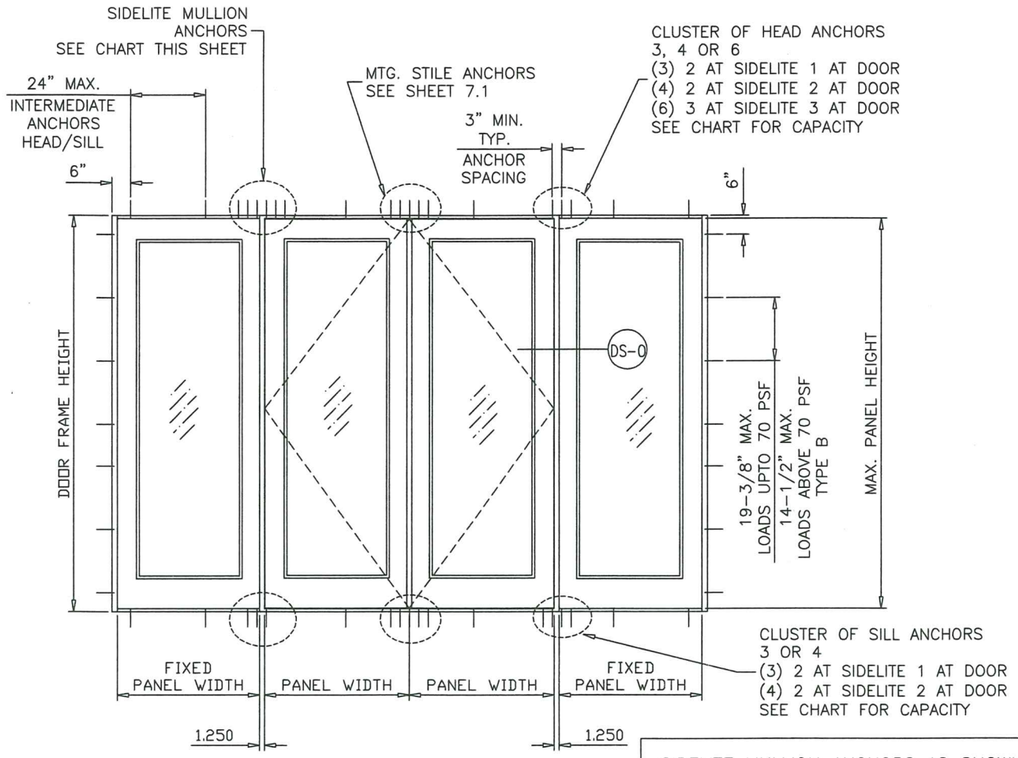

$$\text{WIDTH (W)} = \frac{\text{DOOR PANEL + FIXED PANEL}}{2} + 1.250$$

SIDELITE MULLION ANCHORS AS SHOWN IN DETAILS AND CHARTS INTERMEDIATE ANCHORS TO BE AT 6" FROM CORNERS AND 24" O.C. AT HEAD/SILL.

ANCHORS:

TYPE 'B'– 1/4" DIA. ULTRACON BY 'ELCO' (Fu=177 KSI, Fy=155 KSI)
INTO 2BY WOOD BUCKS OR WOOD STRUCTURES
1-1/2" MIN. PENETRATION INTO WOOD
THRU 1BY WOOD BUCKS INTO CONCRETE
1-1/4" MIN. EMBED INTO CONCRETE
DIRECTLY INTO CONCRETE
1-1/4" MIN. EMBED INTO CONCRETE
EDGE DISTANCES
INTO CONCRETE = 2-1/2" MIN.
INTO WOOD STRUCTURE = 1" MIN.
– AT HEAD

TYPE 'C'– 1/4" DIA. ULTRACON BY 'ELCO' (Fu=177 KSI, Fy=155 KSI)
DIRECTLY INTO CONCRETE
1-3/4" MIN. EMBED INTO CONC.
EDGE DISTANCES
INTO CONCRETE = 2-1/2" MIN.
– AT HEAD OR SILL

TYPE 'D'– 5/16" DIA. ULTRACON BY 'ELCO' (Fu=177 KSI, Fy=155 KSI)
DIRECTLY INTO CONCRETE
1-3/4" MIN. EMBED INTO CONC.
EDGE DISTANCES
INTO CONCRETE = 2-1/2" MIN.
– AT ADA SILL

WOOD AT HEAD OR JAMBS SG = 0.55 MIN.
CONCRETE AT HEAD, SILL OR JAMBS f'c = 3000 PSI MIN.
C-90 HOLLOW/FILLED BLOCK AT JAMBS f'm = 2000 PSI MIN.

TYPE 'B'– 1/4" DIA. ULTRACON BY 'ELCO' (Fu=177 KSI, Fy=155 KSI)
INTO 2BY WOOD BUCKS OR WOOD STRUCTURES
1-1/2" MIN. PENETRATION INTO WOOD
THRU 1BY WOOD BUCKS INTO CONC./HOLLOW BLOCK
1-1/4" MIN. EMBED INTO CONCRETE OR MASONRY
DIRECTLY INTO CONCRETE
1-1/4" MIN. EMBED INTO CONCRETE
EDGE DISTANCES
INTO CONCRETE = 2-1/2" MIN.
INTO WOOD STRUCTURE = 1" MIN.
– AT JAMBS

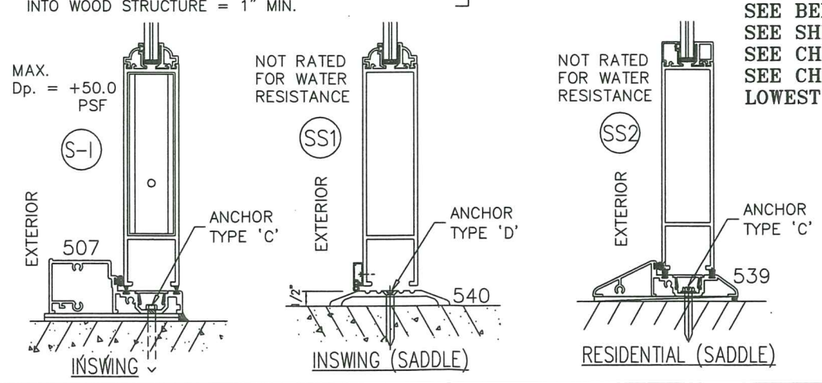

MULLION ANCHORS AT SIDELITES								
NOMINAL DIMS.		DESIGN LOAD CAPACTY–PSF						
		TYPE 'B' AT HEAD			TYPE 'C' AT HEAD TYPE 'C' AT S-I & SS2 SILL		TYPE 'C' AT HEAD TYPE 'D' AT SS1 SILL	
WIDTH (W)	FRAME HEIGHT	CLUSTER OF 3 ANCHORS	CLUSTER OF 4 ANCHORS	CLUSTER OF 6 ANCHORS	CLUSTER OF 3 ANCHORS	CLUSTER OF 4 ANCHORS	CLUSTER OF 3 ANCHORS	CLUSTER OF 4 ANCHORS
2/0	82-3/4"	106.7	110.0	110.0	110.0	110.0	110.0	110.0
2/6		86.2	110.0	110.0	110.0	110.0	110.0	110.0
3/0		72.3	96.4	110.0	109.3	110.0	101.0	110.0
3/6		62.3	83.0	110.0	94.2	110.0	87.0	110.0
2/0	84-3/4"	104.2	110.0	110.0	110.0	110.0	110.0	110.0
2/6		84.2	110.0	110.0	110.0	110.0	110.0	110.0
3/0		70.6	94.1	110.0	106.7	110.0	98.7	110.0
3/6		60.8	81.1	110.0	91.9	110.0	85.0	108.7
2/0	90-3/4"	97.3	110.0	110.0	110.0	110.0	110.0	110.0
2/6		78.6	104.8	110.0	110.0	110.0	109.8	110.0
3/0		65.9	87.9	110.0	99.7	110.0	92.1	110.0
3/6		56.8	75.7	110.0	85.9	110.0	79.4	101.5
2/0	96-3/4"	91.2	110.0	110.0	110.0	110.0	110.0	110.0
2/6		73.7	98.3	110.0	110.0	110.0	103.0	110.0
3/0		61.9	82.5	110.0	93.5	110.0	86.4	110.0
3/6		53.3	71.0	106.5	80.5	107.4	74.4	95.2
2/0	102-3/4"	85.9	110.0	110.0	110.0	110.0	110.0	110.0
2/6		69.4	92.6	110.0	104.9	110.0	97.0	110.0
3/0		58.2	77.7	110.0	88.0	110.0	81.4	104.1
3/6		50.2	66.9	100.3	75.8	101.1	70.1	89.6
2/0	108-3/4"	81.2	108.2	110.0	110.0	110.0	110.0	110.0
2/6		65.6	87.5	110.0	99.2	110.0	91.7	110.0
3/0		55.0	73.4	110.0	83.2	110.0	76.9	98.3
2/0	114-3/4"	76.9	102.6	110.0	110.0	110.0	107.5	110.0
2/6		62.2	82.9	110.0	94.0	110.0	86.9	110.0
3/0		52.2	69.5	104.3	78.8	105.1	72.9	93.2
2/0	120-3/4"	73.1	97.5	110.0	110.0	110.0	102.2	110.0
2/6		59.1	78.8	110.0	89.3	110.0	82.5	105.6
3/0		49.6	66.1	99.1	74.9	99.9	69.2	88.6

LOADS SHOWN ABOVE ARE FOR INSTALLATIONS WHERE WATER INFILTRATION RESISTANCE IS NOT REQUIRED. LIMIT EXT.(+) LOADS TO 50.0 PSF FOR THRESHOLD (S-I) WHERE WATER INFILTRATION RESISTANCE IS REQUIRED. THRESHOLD (SS1) & (SS2) ARE NOT RATED FOR WATER INFILTRATION.

FOR SINGLE OR DOUBLE LEAF DOORS AND SINGLE SIDELITES CAPACITY SEE CHART ON SHEET 6.
SEE SHEET 1.1 FOR LOCK CAPACITIES FOR SINGLE AND DOUBLE DOORS
SEE BELOW FOR THRESHOLD TYPES
SEE SHEET 5 FOR MULLION TYPES AND DESIGN LOAD CAPACITY
SEE CHART ON THIS SHEET FOR MULLION ANCHORS CAPACITY
SEE CHART ON SHEET 7.1 FOR MTG. STILE ANCHORS AT DOUBLE DOOR.
LOWEST VALUE FROM THESE CHARTS WILL APPLY TO ENTIRE ASSEMBLY.

JAVAD AHMAD
LICENSE
No. 70592
SEP 19 2018
STATE OF FLORIDA
PROFESSIONAL ENGINEER

PRODUCT REVISED
as complying with the Florida Building Code
Acceptance No 18-0926.05
Expiration Date 11/9/23
By Ishaq I. Chanda
Miami Dade Product Control

AL-FAROOQ CORPORATION
ENGINEERS & PRODUCT DEVELOPMENT
9360 SUNSET DRIVE, SUITE 220
MIAMI, FLORIDA 33173
(C.A.N. 3538)
TEL. (305) 264-8100 FAX. (305) 262-6978

COMP-ANL\18-106D-WDI

SERIES 450 INSWING DOOR AND SIDELITE

WinDoor, Inc.
7500 Amsterdam Drive
Orlando, FL. 32832
Tel. (407) 481-8400 Fax. (407) 481-5566

revisions:			
no	date	by	description

date: 10-27-06
scale: 1/2" = 1"
dr. by: HAMID
chk. by:

drawing no.
18-106D

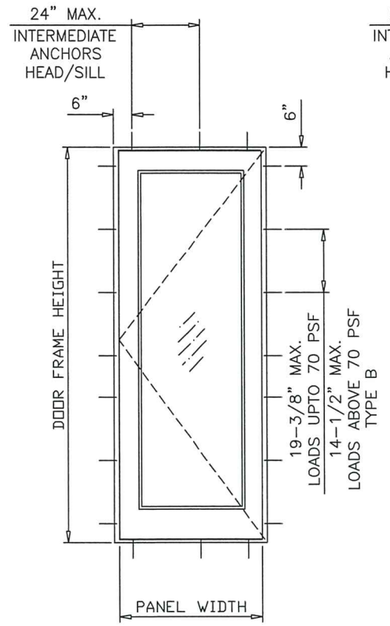

SINGLE DOOR OR SIDELITE

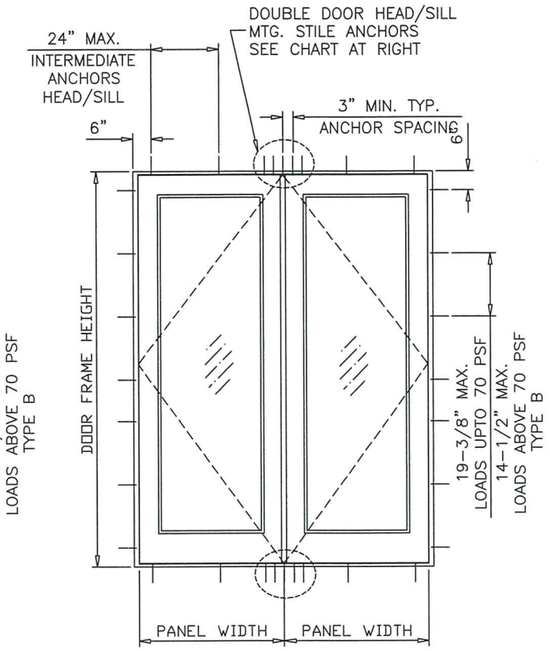

DOUBLE DOOR

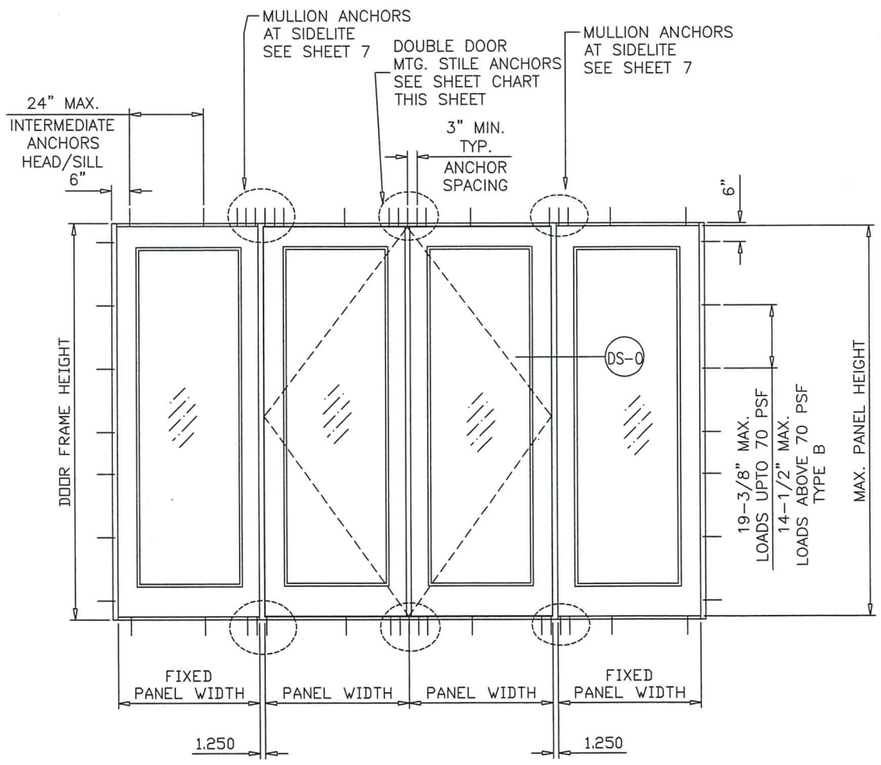

MTG. STILE ANCHORS AT DOUBLE DOORS								
NOMINAL DIMS.		DESIGN LOAD CAPACITY-PSF						
		TYPE 'B' AT HEAD			TYPE 'C' AT HEAD TYPE 'C' AT S-I & SS2 SILL		TYPE 'C' AT HEAD TYPE 'D' AT SS1 SILL	
FRAME WIDTH (XX)	FRAME HEIGHT	CLUSTER OF 3 ANCHORS	CLUSTER OF 4 ANCHORS	CLUSTER OF 5 ANCHORS	CLUSTER OF 3 ANCHORS	CLUSTER OF 4 ANCHORS	CLUSTER OF 3 ANCHORS	CLUSTER OF 4 ANCHORS
50-1/2"	82-3/4"	106.7	110.0	110.0	110.0	110.0	110.0	110.0
62-1/2"		86.2	110.0	110.0	110.0	110.0	100.7	110.0
74-1/2"		72.3	96.4	110.0	109.3	110.0	84.5	110.0
86-1/2"		62.3	83.0	103.8	94.2	110.0	72.8	97.0
50-1/2"	84-3/4"	104.2	110.0	110.0	110.0	110.0	110.0	110.0
62-1/2"		84.2	110.0	110.0	110.0	110.0	98.4	110.0
74-1/2"		70.6	94.1	110.0	106.7	110.0	82.5	110.0
86-1/2"		60.8	81.1	101.4	91.9	110.0	71.1	94.8
50-1/2"	90-3/4"	97.3	110.0	110.0	110.0	110.0	110.0	110.0
62-1/2"		78.6	104.8	110.0	110.0	110.0	91.9	110.0
74-1/2"		65.9	87.9	109.9	99.7	110.0	77.1	102.7
86-1/2"		56.8	75.7	94.7	85.9	110.0	66.4	88.5
50-1/2"	96-3/4"	91.2	110.0	110.0	110.0	110.0	106.6	110.0
62-1/2"		73.7	98.3	110.0	110.0	110.0	86.2	110.0
74-1/2"		61.9	82.5	103.1	93.5	110.0	72.3	96.4
86-1/2"		53.3	71.0	88.8	80.5	107.4	62.3	83.0
50-1/2"	102-3/4"	85.9	110.0	110.0	110.0	110.0	100.4	110.0
62-1/2"		69.4	92.6	110.0	104.9	110.0	81.1	108.2
74-1/2"		58.2	77.7	97.1	88.0	110.0	68.1	90.7
86-1/2"		50.2	66.9	83.6	75.8	101.1	58.6	78.2
50-1/2"	108-3/4"	81.2	108.2	110.0	110.0	110.0	94.9	110.0
62-1/2"		65.6	87.5	109.3	99.2	110.0	76.7	102.2
74-1/2"		55.0	73.4	91.7	83.2	110.0	64.3	85.7
50-1/2"	114-3/4"	76.9	102.6	110.0	110.0	110.0	89.9	110.0
62-1/2"		62.2	82.9	103.6	94.0	110.0	72.6	96.9
74-1/2"		52.2	69.5	86.9	78.8	105.1	60.9	81.3
50-1/2"	120-3/4"	73.1	97.5	110.0	110.0	110.0	85.4	110.0
62-1/2"		59.1	78.8	98.5	89.3	110.0	69.0	92.0
74-1/2"		49.6	66.1	82.6	74.9	99.9	57.9	77.2

SEE SHEET 7 FOR ANCHORS DESCRIPTION AND SILL ANCHOR OPTIONS

FOR SINGLE OR DOUBLE LEAF DOORS, SINGLE SIDELITES AND THRESHOLD CAPACITY SEE CHART ON SHEET 6.
SEE SHEET 1.1 FOR LOCK CAPACITIES FOR SINGLE AND DOUBLE DOORS
SEE SHEET 5 FOR MULLION TYPES AND DESIGN LOAD CAPACITY
SEE CHART ON SHEET 7 FOR MULLION ANCHORS CAPACITY
SEE CHART ON THIS SHEET FOR MTG. STILE ANCHORS AT DOUBLE DOOR.
LOWEST VALUE FROM THESE CHARTS WILL APPLY TO ENTIRE ASSEMBLY.

PRODUCT REVISED
as complying with the Florida
Building Code
Acceptance No. 18-0926.05
Expiration Date 11/9/21
By Ishwar Lilhanda
Manager Product Control

MEETING STILE ANCHORS AS SHOWN IN DETAILS AND CHARTS
INTERMEDIATE ANCHORS TO BE AT 6" FROM CORNERS
AND 24" O.C. AT HEAD/SILL.

JAVAD AHMAD
LICENSE
No. 70592
SEP 19 2018
STATE OF FLORIDA
PROFESSIONAL ENGINEER

AL-FAROOQ CORPORATION
ENGINEERS & PRODUCT DEVELOPMENT
9360 SUNSET DRIVE, SUITE 220
MIAMI, FLORIDA 33173
TEL. (305) 264-8100 FAX. (305) 262-6978
(C.A.N. 3538)

COMP-ANL\18-106D-WDI

SERIES 450 INSWING DOOR AND SIDELITE

WinDoor, Inc.
7500 Amsterdam Drive
Orlando, FL. 32832
Tel. (407) 481-8400 Fax. (407) 481-5566

revisions:

no	date	by	description

date: 10-27-06
scale: 1/2" = 1"
dr. by: HAMID
chk. by:

drawing no.
18-106D

sheet 7.1 of 7

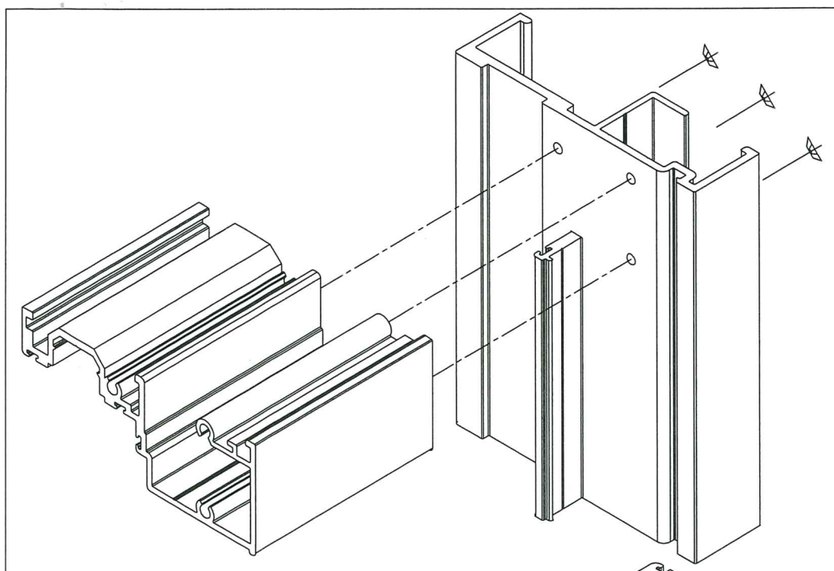

HEAD CORNER DETAIL

CORNERS TO BE SEALED WITH
LOW MODULUS SILICONE SILPRUF.

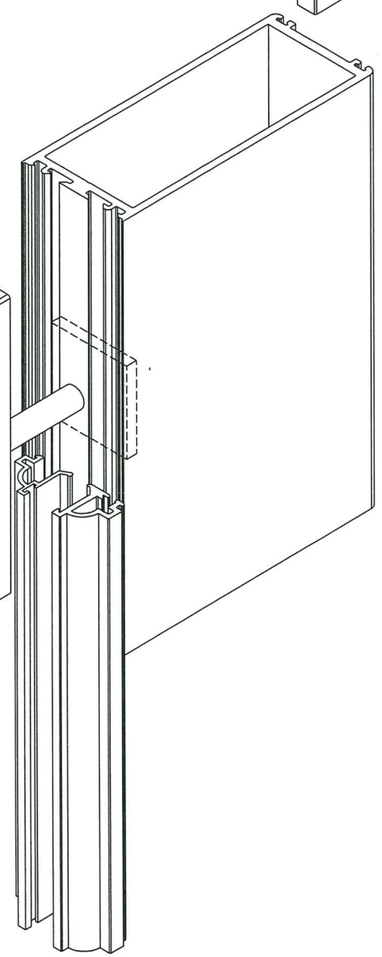

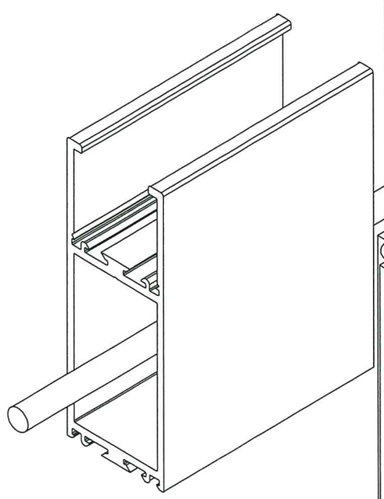

PANEL CORNER DETAIL

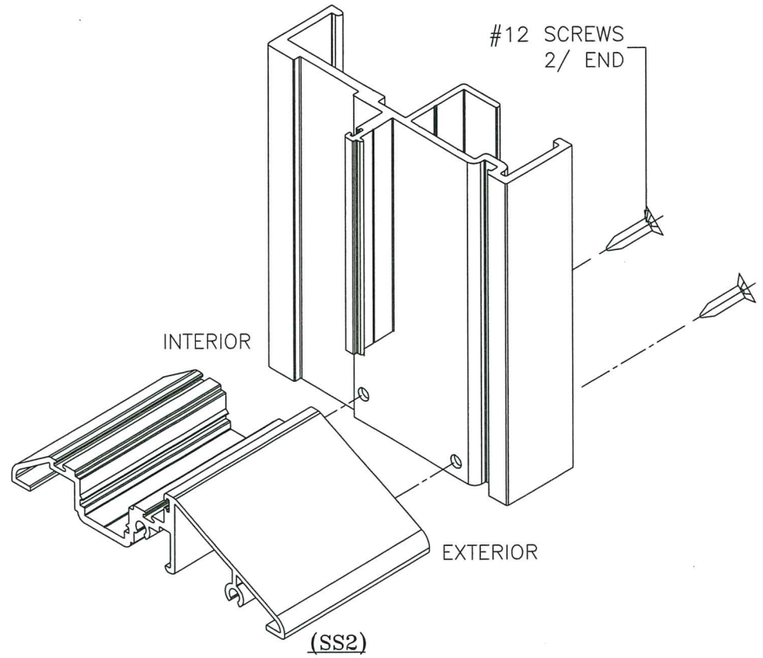

(SS2)
RESIDENTIAL SADDLE SILL CORNER CONSTRUCTION

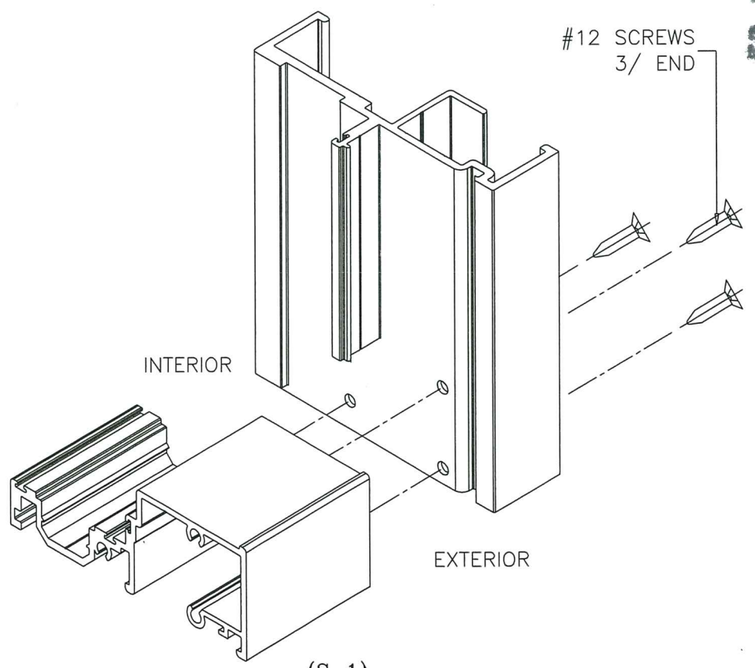

(S-1)
STD. SILL CORNER DETAIL

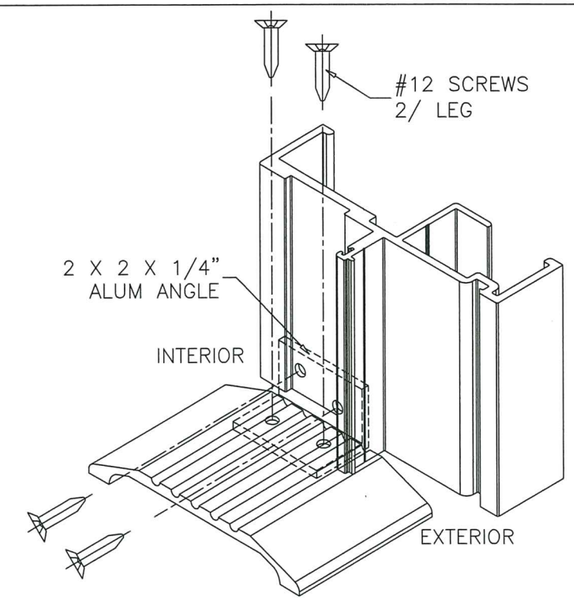

(SS1)
ADA SILL CORNER DETAIL

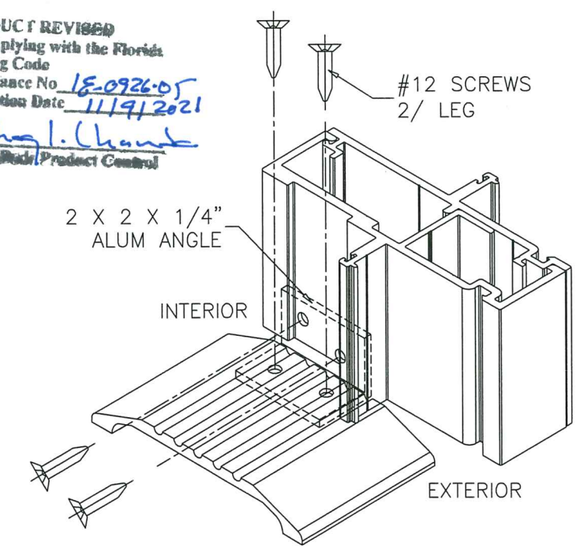

ADA SILL @ MULLION

PRODUCT REVISED
as complying with the Florida
Building Code
Acceptance No. 18-0926.05
Expiration Date 11/9/2021
By: Shaq L. Chanda
Manager, Product Control

JAVAD AHMAD
LICENSE
No. 70592
SEP 19 2018
STATE OF
FLORIDA
PROFESSIONAL ENGINEER

AL-FAROOQ CORPORATION
ENGINEERS & PRODUCT DEVELOPMENT
9360 SUNSET DRIVE, SUITE 220
MIAMI, FLORIDA 33173 (C.A.N. 3538)
TEL. (305) 264-8100 FAX. (305) 262-6978

COMP-ANL\18-106D-WDI

SERIES 450 INSWING DOOR AND SIDELITE

WinDoor, Inc.
7500 Amsterdam Drive
Orlando, FL. 32832
Tel. (407) 481-8400 Fax. (407) 481-5566

revisions:

no	date	by	description

date: 10-27-06
scale: 1/2" = 1"
dr. by: HAMID
chk. by:

drawing no.
18-106D

sheet 7.2 of 7