MIAMI-DADE COUNTY
DEPARTMENT OF REGULATORY AND ECONOMIC RESOURCES (RER)
BOARD AND CODE ADMINISTRATION DIVISION

MIAMI-DADE COUNTY
PRODUCT CONTROL SECTION
11805 SW 26 Street, Room 208
Miami, Florida 33175-2474
T (786) 315-2590 F (786) 315-2599
www.miamidade.gov/economy

NOTICE OF ACCEPTANCE (NOA)

Tremco, Inc.
3735 Green Road
Beachwood, OH 44122

SCOPE:
This NOA is being issued under the applicable rules and regulations governing the use of construction materials. The documentation submitted has been reviewed and accepted by Miami-Dade County RER- Product Control Section to be used in Miami Dade County and other areas where allowed by the Authority Having Jurisdiction (AHJ).

This NOA shall not be valid after the expiration date stated below. The Miami-Dade County Product Control Section (In Miami Dade County) and/or the AHJ (in areas other than Miami Dade County) reserve the right to have this product or material tested for quality assurance purposes. If this product or material fails to perform in the accepted manner, the manufacturer will incur the expense of such testing and the AHJ may immediately revoke, modify, or suspend the use of such product or material within their jurisdiction. RER reserves the right to revoke this acceptance, if it is determined by Miami-Dade County Product Control Section that this product or material fails to meet the requirements of the applicable building code.

This product is approved as described herein, and has been designed to comply with the High Velocity Hurricane Zone of the Florida Building Code.

DESCRIPTION: "Tremlock R Plus" 0.023" (min.) Steel Structural Roof Panel

APPROVAL DOCUMENT: Drawing No. E, titled " Tremlock R Plus 24ga. Details ", sheets 1 through 5 of 5, prepared by Terrence E. Wolfe, P.E., dated November 12, 2013, last revision dated November 12, 2013, signed and sealed by Terrence E. Wolfe, P.E., bearing the Miami-Dade County Product Control Approval stamp with the Notice of Acceptance number and the approval date by the Miami-Dade County Product Control Section.

MISSILE IMPACT RATING: Large and Small Missile Impact Resistant

LABELING: Each panel shall bear a permanent label with the manufacturer's name or logo:

1500 Hamilton Road	9700 Interstate 20	253 One Georgia Drive
Bossier City, LA 71111	Merkel, TX 79536	Ashburn, GA 31714

and the following statement: "Miami-Dade County Product Control Approved", unless otherwise noted herein.

RENEWAL of this NOA shall be considered after a renewal application has been filed and there has been no change in the applicable building code negatively affecting the performance of this product.

TERMINATION of this NOA will occur after the expiration date or if there has been a revision or change in the materials, use, and/or manufacture of the product or process. Misuse of this NOA as an endorsement of any product, for sales, advertising or any other purposes shall automatically terminate this NOA. Failure to comply with any section of this NOA shall be cause for termination and removal of NOA.

ADVERTISEMENT: The NOA number preceded by the words Miami-Dade County, Florida, and followed by the expiration date may be displayed in advertising literature. If any portion of the NOA is displayed, then it shall be done in its entirety.

INSPECTION: A copy of this entire NOA shall be provided to the user by the manufacturer or its distributors and shall be available for inspection at the job site at the request of the Building Official.

This NOA **renews NOA #13-0716.10** and consists of this page 1, evidence submitted page E-1 as well as approval document mentioned above.
The submitted documentation was reviewed by **Helmy A. Makar, P.E., M.S.**

MIAMI-DADE COUNTY APPROVED

Helmy A. Makar
12/13/2018

NOA No. 18-0928.08
Expiration Date: 12/04/2023
Approval Date: 12/13/2018

Tremco, Inc.

NOTICE OF ACCEPTANCE: EVIDENCE SUBMITTED

1. EVIDENCE SUBMITTED UNDER PREVIOUS APPROVAL #13-0716.10

A. DRAWINGS

1. *Drawing No. E, titled " Tremlock R Plus 24ga. Details ", sheets 1 through 5 of 5, prepared by Terrence E. Wolfe, P.E., dated November 12, 2013, last revision dated November 12, 2013, signed and sealed by Terrence E. Wolfe, P.E.*

B. TESTS

1. *See NOA # 13-1024.02.*

C. CALCULATIONS

1. *See NOA # 13-1024.02.*

D. QUALITY ASSURANCE

1. *By Miami-Dade County Department of Regulatory and Economic Resources.*

E. MATERIAL CERTIFICATIONS

1. *See NOA # 13-1024.02.*

F. STATEMENTS

1. *Private Labeling Agreement, dated March 26, 2012, signed by Ken Gieseke and Thomas Biller.*

2. NEW EVIDENCE SUBMITTED

A. DRAWINGS

1. *None.*

B. TESTS

1. *See NOA # 18-1015.07.*

C. CALCULATIONS

1. *See NOA # 18-1015.07.*

D. QUALITY ASSURANCE

1. *By Miami-Dade County Department of Regulatory and Economic Resources.*

E. MATERIAL CERTIFICATIONS

1. *See NOA # 18-1015.07.*

F. STATEMENTS

1. *Private Labeling Agreement, dated June 04, 2018, signed by Ken Gieseke and Michael Drumm.*

Helmy A. Makar, P.E., M.S.
Product Control Section Supervisor
NOA No. 18-0928.08
Expiration Date: 12/04/2023
Approval Date: 12/13/2018

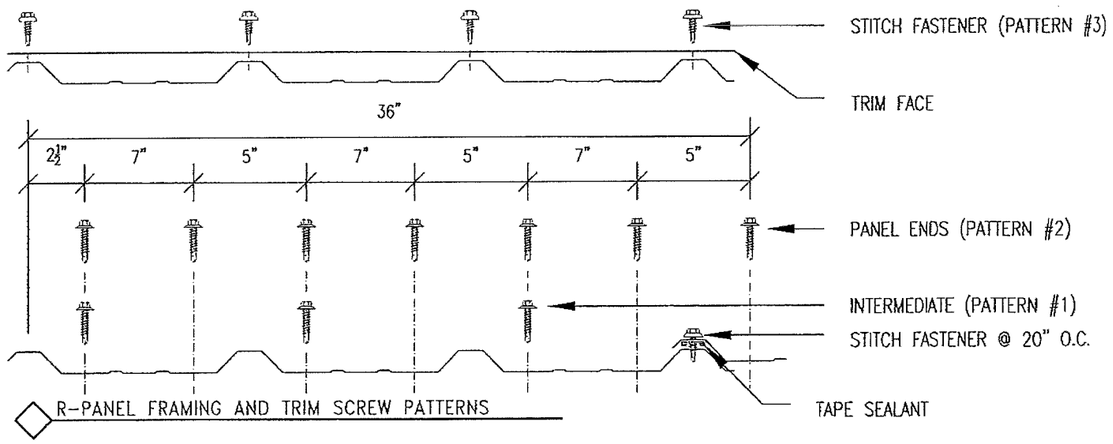

R-PANEL FRAMING AND TRIM SCREW PATTERNS

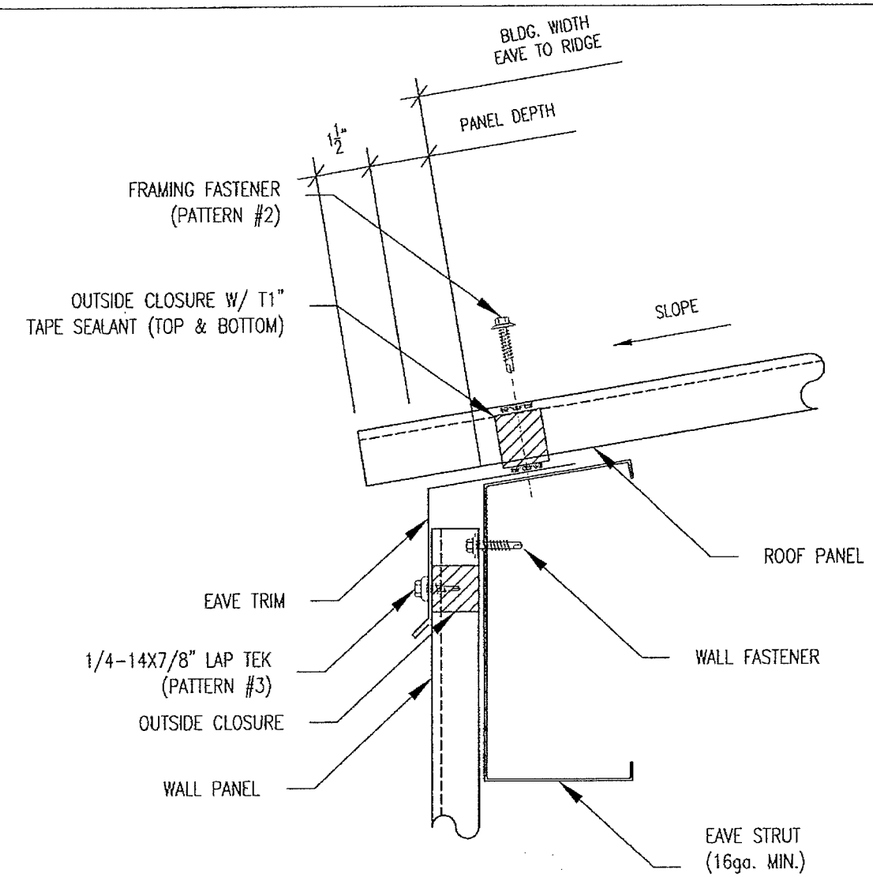

1 LOW EAVE

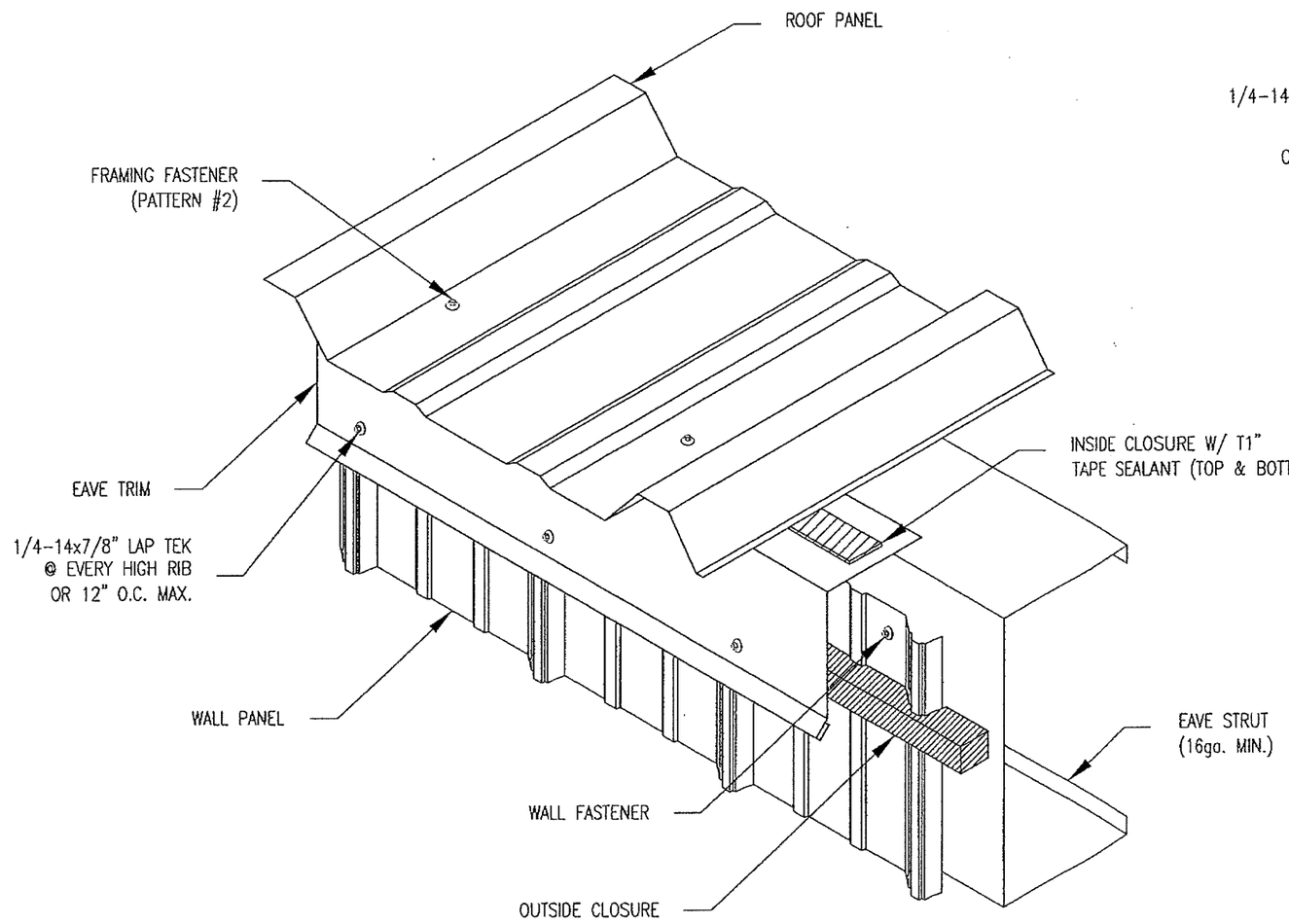

PRODUCT RENEWED
as complying with the Florida
Building Code
Acceptance No 18-0928.08
Expiration Date 12/04/2023
By
Miami Dade Product Control

Approved as complying with the
Florida Building Code
Date 01/30/2014
NOA#13-0716.10
Miami Dade Product Control
By

State of Florida
C.O.A.
26775

TERRENCE E. WOLFE
LICENSE
No. 44923
STATE OF
FLORIDA
PROFESSIONAL ENGINEER

NOV 12 2013

DRAWING ENGINEER	TERRENCE E. WOLFE, P.E.
FLORIDA REGISTRATION NO.	44923

REV.	BY	DESCRIPTION	DATE
	TW	FOR APPROVAL	11-12-13

TREMCO
ROOFING & BUILDING MAINTENANCE

PROJECT	DADE COUNTY TESTING
SHEET TITLE	TREMLOCK "R" PLUS 24ga. DETAILS
LOCATION	DADE COUNTY, FLORIDA
DRAWN BY	
CHECKED BY	
PROJECT NUMBER	
DATE	11-12-13
SCALE	H.T.S.
DRAWING NUMBER	13-0716.10
SHEET NUMBER	E1 of 5

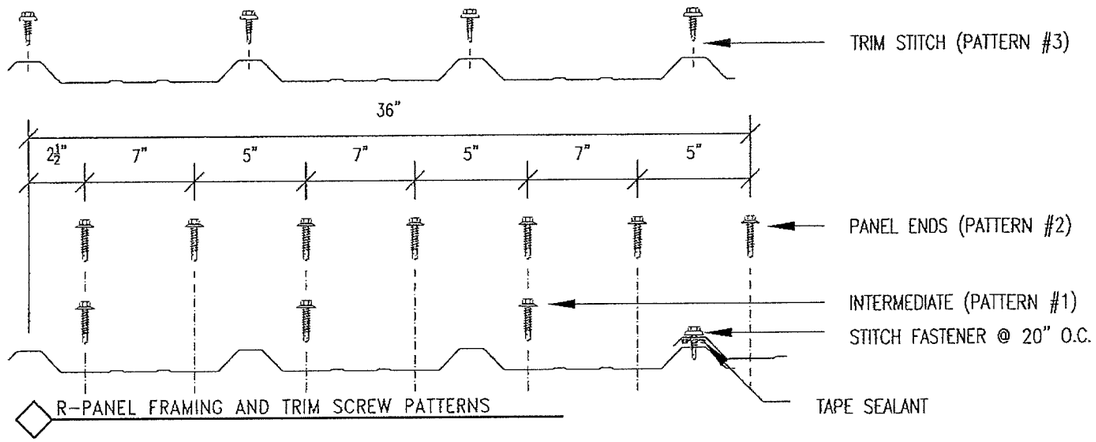

R-PANEL FRAMING AND TRIM SCREW PATTERNS

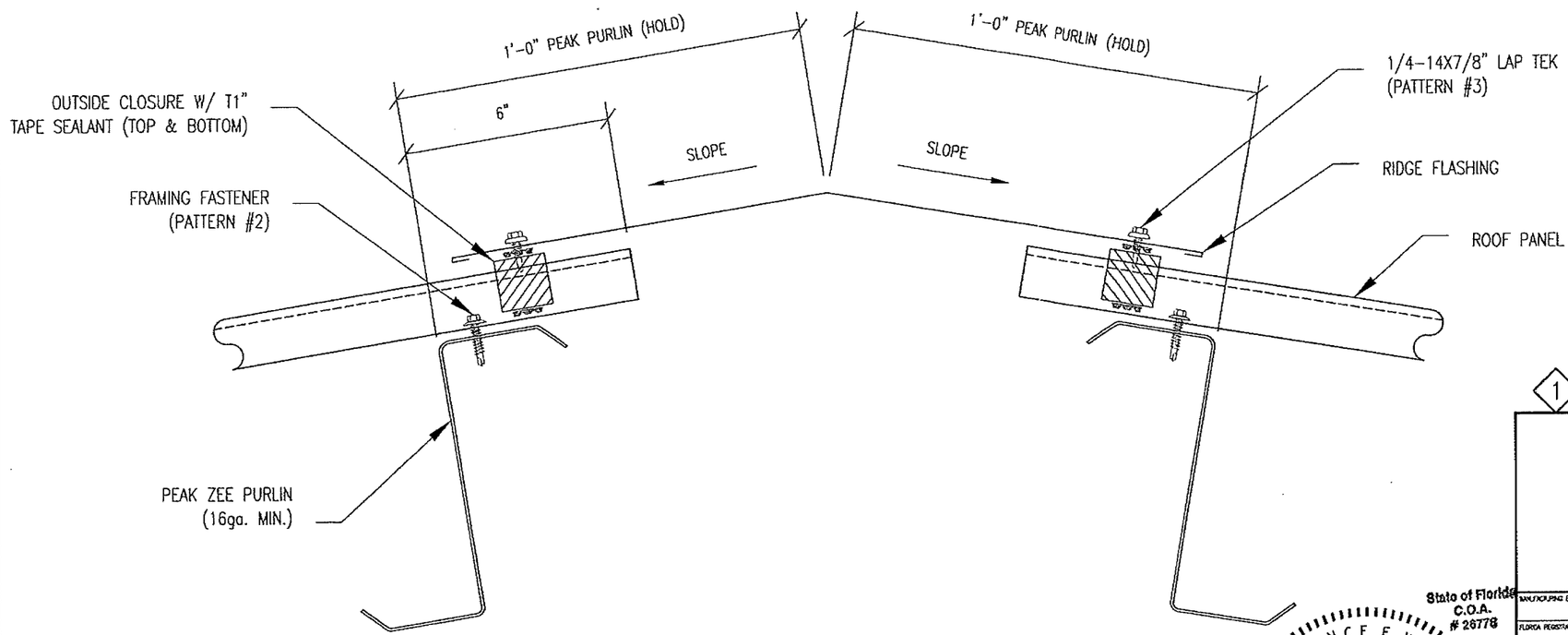

1 RIDGE

PRODUCT RENEWED
as complying with the Florida Building Code
Acceptance No 18-0928.08
Expiration Date 12/04/2023
By
Miami Dade Product Control

Approved as complying with the Florida Building Code
Date 01/30/2014
NOA# 13-0716.10
Miami Dade Product Control
By

State of Florida C.O.A. # 26778

TERRENCE E. WOLFE LICENSE No. 44923 STATE OF FLORIDA PROFESSIONAL ENGINEER

NOV 18 2013

MANUFACTURING ENGINEER	TERRENCE E. WOLFE, P.E.
FLORIDA REGISTRATION NO.	44923

REV.	BY	DESCRIPTION	DATE
	TW	FOR APPROVAL	11-12-13

TREMCO®
ROOFING & BUILDING MAINTENANCE

PROJECT: DADE COUNTY TESTING		
SHEET: TREMLOCK "R" PLUS 24ga. DETAILS	DRAWN BY:	DATE: 11-12-13
	CHECKED BY:	SCALE: N.T.S.
LOCATION: DADE COUNTY, FLORIDA	PROJECT NUMBER:	DRAWING NUMBER: 13-0716.10 — SHEET NUMBER: E2 of 5

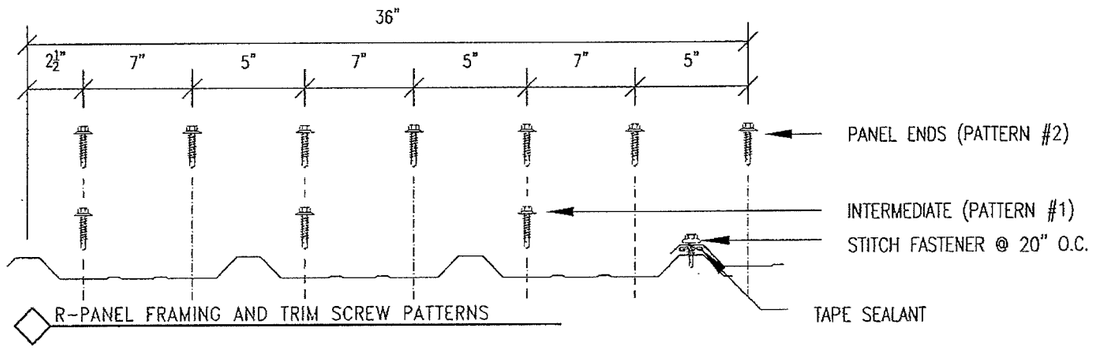

R-PANEL FRAMING AND TRIM SCREW PATTERNS

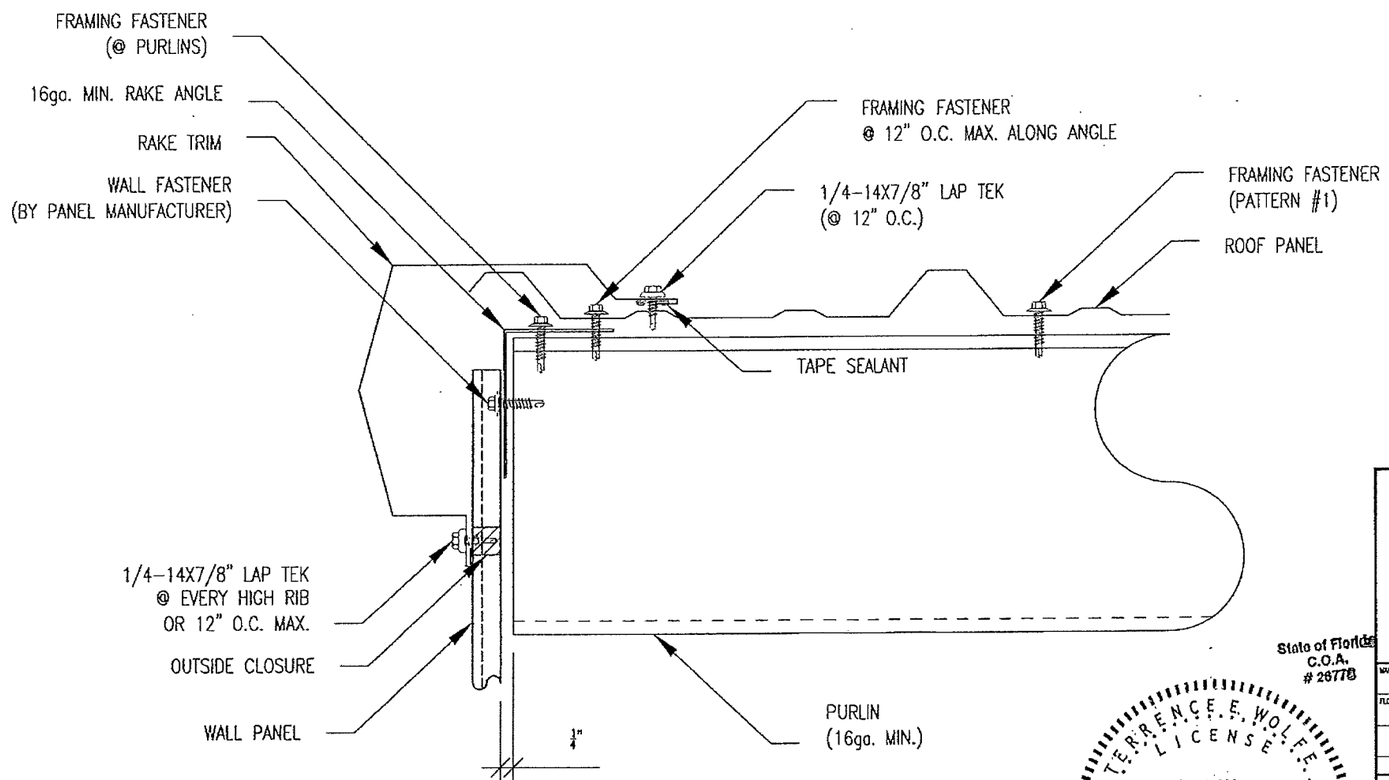

1 RAKE

PRODUCT RENEWED
as complying with the Florida
Building Code
Acceptance No 18-0928.08
Expiration Date 12/04/2023
By
Miami Dade Product Control

Approved as complying with the
Florida Building Code
Date 01/30/2014
NOA# 13-0716.10
Miami Dade Product Control
By

State of Florida
C.O.A.
26778

TERRENCE E. WOLFE
LICENSE
No. 44923
STATE OF FLORIDA
PROFESSIONAL ENGINEER

NOV 12 2013

MANUFACTURING ENGINEER	TERRENCE E. WOLFE, P.E.
FLORIDA REGISTRATION NO.	44923

REV.	BY	DESCRIPTION	DATE
	TW	FOR APPROVAL	11-12-13

TREMCO.
ROOFING & BUILDING MAINTENANCE

PROJECT: DADE COUNTY TESTING

TREMLOCK "R" PLUS 24ga. DETAILS

LOCATION: DADE COUNTY, FLORIDA

DRAWN BY:
DESIGNED BY:
PROJECT NUMBER:

DATE: 11-12-13
SCALE: N.T.S.
DRAWING NUMBER: 13-0716.10
SHEET NUMBER: E3 of 5

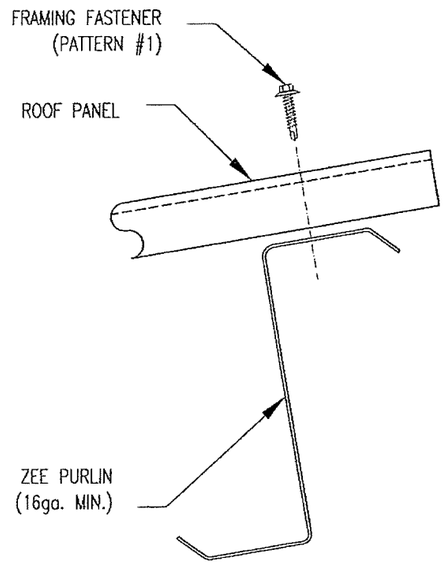

INTERMEDIATE CONN.

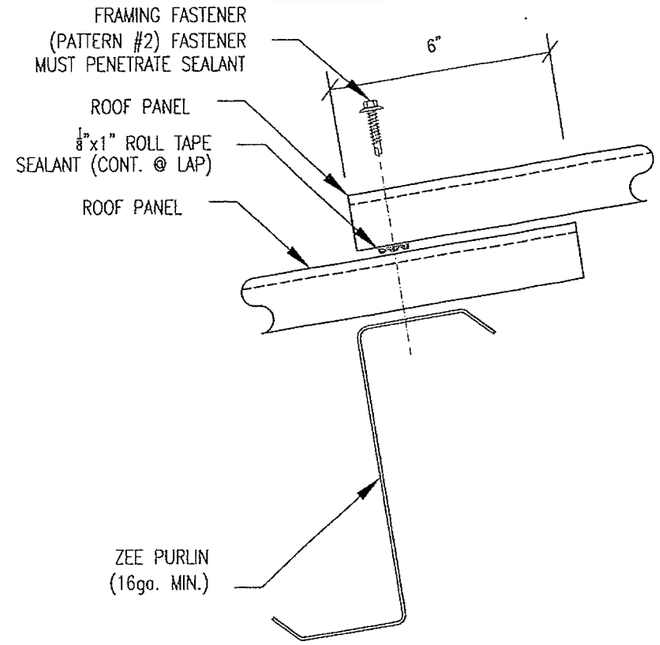

PANEL LAP

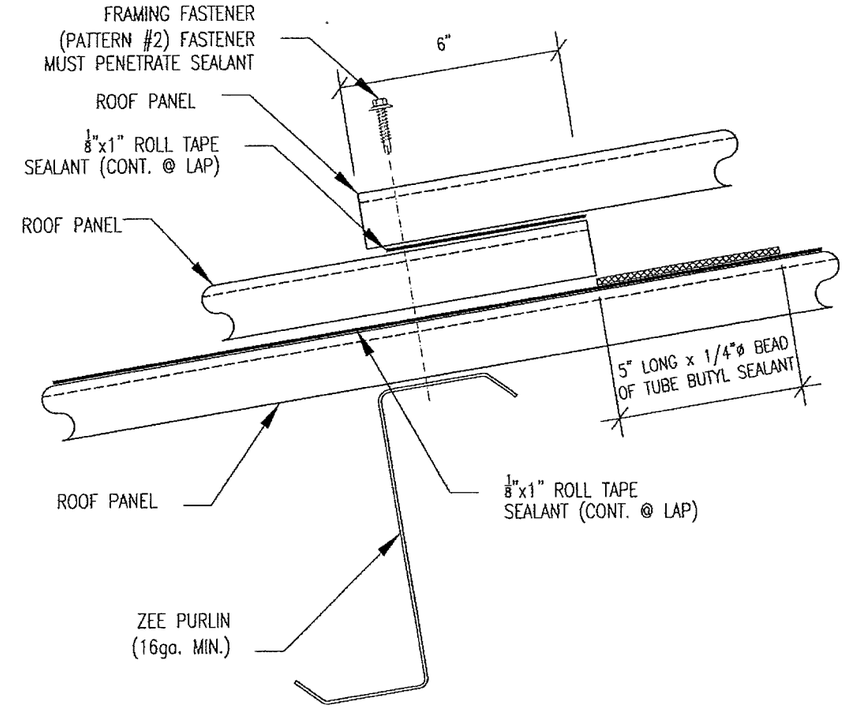

DETAIL A1

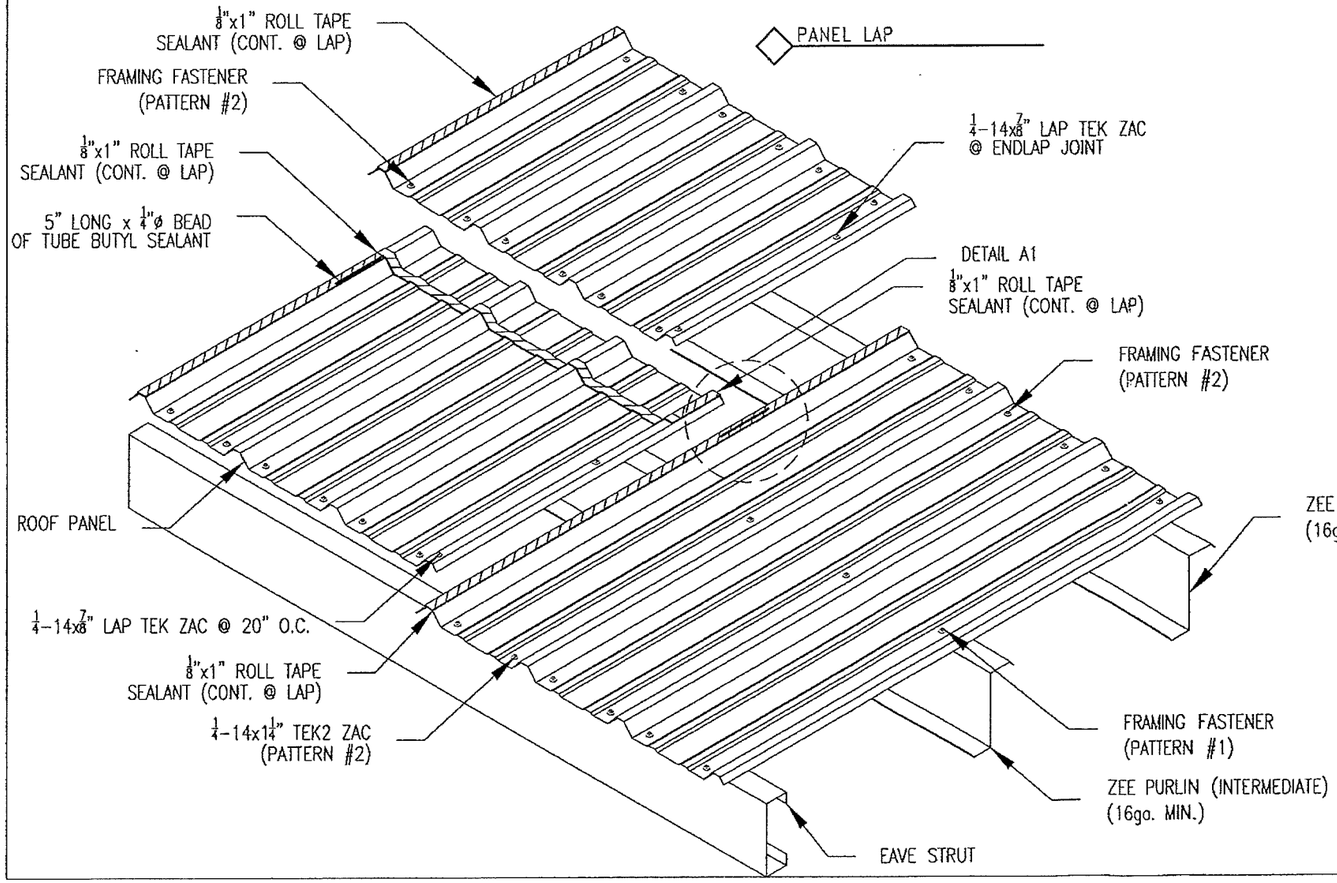

PRODUCT RENEWED
as complying with the Florida
Building Code
Acceptance No 18-0928.08
Expiration Date 12/04/2023
By
Miami Dade Product Control

Approved as complying with the
Florida Building Code
Date 01/30/2014
NOA# 13-0716.10
Miami Dade Product Control
By

State of Florida
C.O.A.
26778

TERRENCE E. WOLFE
LICENSE
No. 44923
STATE OF
FLORIDA
PROFESSIONAL ENGINEER

NOV 19 2013

MANUFACTURING ENGINEER	TERRENCE E. WOLFE, P.E.
FLORIDA REGISTRATION NO.	44923

TREMCO
ROOFING & BUILDING MAINTENANCE

REV.	BY	DESCRIPTION	DATE
	TW	FOR APPROVAL	11-12-13

PROJECT	DADE COUNTY TESTING		
SUBJECT	TREMLOCK "R" PLUS 24ga. DETAILS	DRAWN BY: / CHECKED BY:	DATE 11-12-13 / SCALE N.T.S.
LOCATION	DADE COUNTY, FLORIDA	PROJECT NUMBER	DRAWING NUMBER 13-0716.10 / SHEET NUMBER E4 of 5

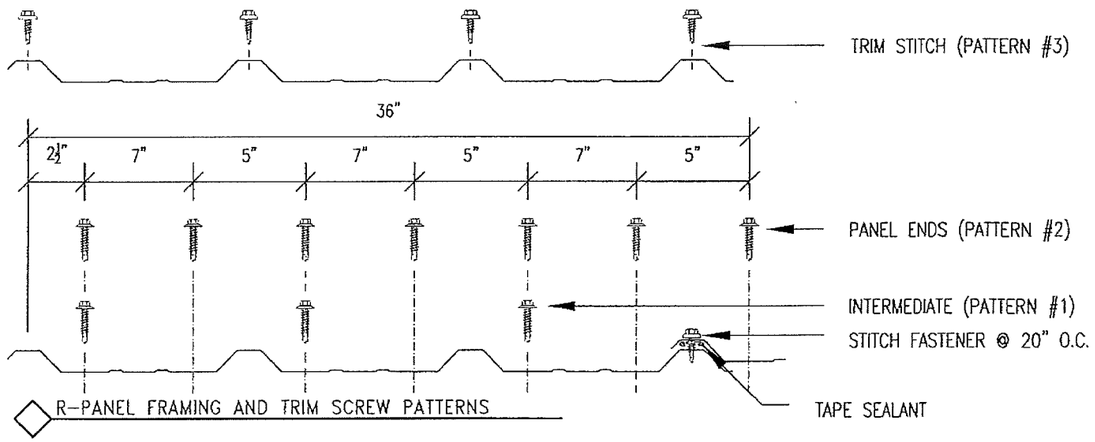

R-PANEL FRAMING AND TRIM SCREW PATTERNS

NOTES:

1. THE MAXIMUM PRESSURE SHALL BE CALCULATED USING THE FOLLOWING ALLOWANCES.
   - POSITIVE PRESSURE
     A) MAXIMUM ALLOWABLE BENDING MOMENT OF THE PANEL AT SUPPORTS = 119.75 FT. LB.
     B) MAXIMUM ALLOWABLE BENDING MOMENT OF THE PANEL BETWEEN SUPPORTS = 95.8 FT. LB.
     C) MAXIMUM ALLOWABLE DEFLECTION OF ROOF PANEL = L/240
     D) MAXIMUM ALLOWABLE REACTION = 95.8 LBS EXT.
     = 263.45 LBS. INT.
     E) EI = 1.4278 X 10^6 LB-IN^2

   - NEGATIVE PRESSURE
     A) MAXIMUM ALLOWABLE BENDING MOMENT OF THE PANEL AT SUPPORTS = 106.75 FT. LB.
     B) MAXIMUM ALLOWABLE BENDING MOMENT OF THE PANEL BETWEEN SUPPORTS = 85.4 FT. LB.
     C) MAXIMUM ALLOWABLE DEFLECTION OF ROOF PANEL = L/240
     D) MAXIMUM SUPPORT REACTION = 85.4 LBS. EXT.
     = 234.85 LBS. INT.
     EI = 1.2728 X 10^6 LB-IN^2

2. THE MAXIMUM ALLOWABLE SPANS & PRESSURES ARE AS FOLLOWS:

- POSITIVE PRESSURE		- NEGATIVE PRESSURE	
SPAN	PRESSURE	SPAN	PRESSURE
5'-0"	47.9 PSF	5'-0"	42.7 PSF
2'-0"	156.65 PSF	2'-0"	117.65 PSF

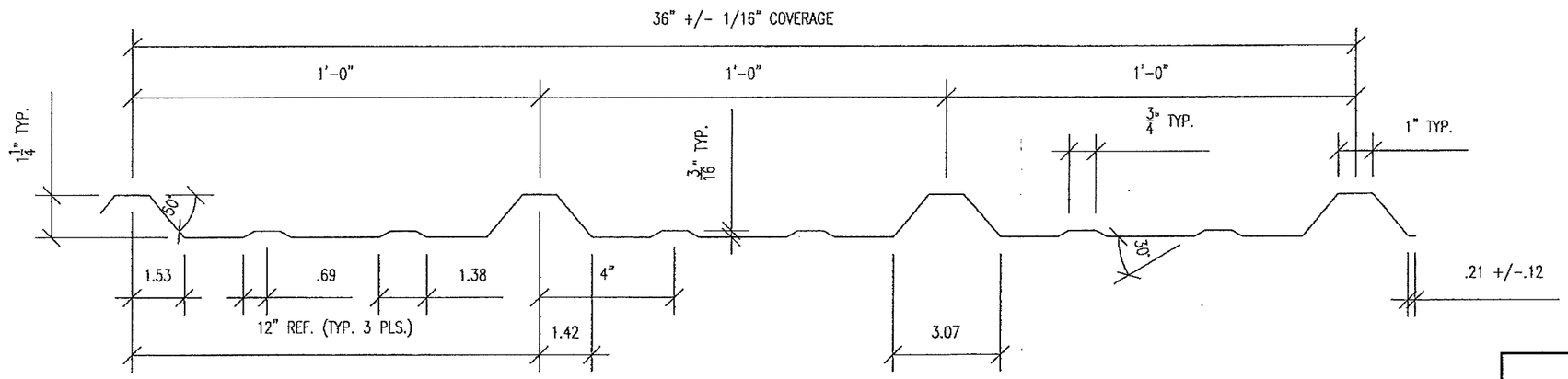

TREMLOCK "R" PLUS PANEL PROFILE

STITCH FASTENER:
1/4-14x7/8" LAP/TEK ZAC
BY: SFS INTEC
** SEE NOTE BELOW

FRAMING FASTENER:
1/4-14x1 1/4" TEK2 ZAC
BY: SFS INTEC
** SEE NOTE BELOW

** NOTE
ZAC IS A ZINC-ALUMINUM CAP WITH A 5/8" DIA. NEPRENE SEALING WASHER

SIKALASTOMER 511 TUBE SEALANT
BY: SIKA

SIKAFLEX 201 URETHANE TUBE SEALANT
BY: SIKA

1/8"x1" BUTYL ROLL TAPE SEALANT
BY: SCHNEE-MOREHEAD

PANEL PROPERTIES						
ASTM	PANEL GAUGE	PANEL THICKNESS	YIELD STRENGTH	TENSILE STRENGTH	STEEL COATING	PAINT COATINGS
A792	24	.023 (MIN.)	50 KSI (MIN.)	65 KSI (MIN.)	AZ 55 (BARE) AZ 50 (PAINTED)	KYNAR 500

PRODUCT RENEWED
as complying with the Florida Building Code
Acceptance No 18-0928.08
Expiration Date 12/04/2023
By
Miami Dade Product Control

Approved as complying with the Florida Building Code
Date 01/30/2014
NOA# 13-0716.10
Miami Dade Product Control
By

TERRENCE E. WOLFE
LICENSE
No. 44923
STATE OF FLORIDA
PROFESSIONAL ENGINEER

State of Florida
C.O.A.
26778

NOV 12 2013

MANUFACTURING ENGINEER	TERRENCE E. WOLFE, P.E.
FLORIDA REGISTRATION NO.	44923

TREMCO.
ROOFING & BUILDING MAINTENANCE

REV.	BY	DESCRIPTION	DATE
	TW	FOR APPROVAL	11-12-13

PROJECT: DADE COUNTY TESTING
SHEET: TREMLOCK "R" PLUS 24ga. DETAILS
LOCATION: DADE COUNTY, FLORIDA
DRAWN BY:
CHECKED BY:
PROJECT NUMBER:
DATE: 11-12-13
SCALE: N.T.S.
DRAWING NUMBER: 13-0716.10
SHEET NUMBER: E5 of 5