MIAMI-DADE COUNTY
DEPARTMENT OF REGULATORY AND ECONOMIC RESOURCES (RER)
BOARD AND CODE ADMINISTRATION DIVISION

MIAMI–DADE COUNTY, FLORIDA
PRODUCT CONTROL SECTION
11805 SW 26 Street, Room 208
T (786) 315–2590 F (786) 315–2599
www.miamidade.gov/economy

# NOTICE OF ACCEPTANCE (NOA)

**Sunshine Windows Manufacturing, Inc.**
**1745 W. 33rd Place**
**Hialeah, FL 33012**

**SCOPE:**

This NOA is being issued under the applicable rules and regulations governing the use of construction materials. The documentation submitted has been reviewed and accepted by Miami-Dade County RER–Product Control Section to be used in Miami–Dade County and other areas where allowed by the Authority Having Jurisdiction (AHJ).

This NOA shall not be valid after the expiration date stated below. The Miami-Dade County Product Control Section (In Miami-Dade County) and/ or the AHJ (in areas other than Miami-Dade County) reserve the right to have this product or material tested for quality assurance purposes. If this product or material fails to perform in the accepted manner, the manufacturer will incur the expense of such testing and the AHJ may immediately revoke, modify, or suspend the use of such product or material within their jurisdiction. RER reserves the right to revoke this acceptance, if it is determined by Miami–Dade County Product Control Section that this product or material fails to meet the requirements of the applicable building code.

This product is approved as described herein, and has been designed to comply with the Florida Building Code, including the High Velocity Hurricane Zone.

**DESCRIPTION: Series "2009" Aluminum Sliding Glass Door – L.M.I.**

**APPROVAL DOCUMENT:** Drawing No. **SGD18**, titled "Series 2009 Aluminum Sliding Glass Door Impact Resistant Glass", sheets 1 through 16 of 16, dated 10/10/18, with revision #1 dated 10/10/18, prepared by manufacturer, signed and sealed by Francisco Hernandez, P.E., bearing the Miami-Dade County Product Control Revision stamp with the Notice of Acceptance number and expiration date by the Miami-Dade County Product Control Section.

**MISSILE IMPACT RATING: Large and Small Missile Impact Resistant**

**LABELING:** Each unit shall bear a permanent label with the manufacturer's name or logo, city, state, series, and following statement: "Miami-Dade County Product Control Approved", unless otherwise noted herein.

**RENEWAL** of this NOA shall be considered after a renewal application has been filed and there has been no change in the applicable building code negatively affecting the performance of this product.

**TERMINATION** of this NOA will occur after the expiration date or if there has been a revision or change in the materials, use, and/ or manufacture of the product or process. Misuse of this NOA as an endorsement of any product, for sales, advertising or any other purposes shall automatically terminate this NOA. Failure to comply with any section of this NOA shall be cause for termination and removal of NOA.

**ADVERTISEMENT:** The NOA number preceded by the words Miami–Dade County, Florida, and followed by the expiration date may be displayed in advertising literature. If any portion of the NOA is displayed, then it shall be done in its entirety.

**INSPECTION:** A copy of this entire NOA shall be provided to the user by the manufacturer or its distributors and shall be available for inspection at the job site at the request of the Building Official.

This NOA **revises NOA No. 17-1025.06** and consists of this page 1 and evidence pages E-1, E-2 and E-3, as well as approval document mentioned above.

The submitted documentation was reviewed by **Sifang Zhao, P.E.**

S.Z.
02/28/2019

MIAMI-DADE COUNTY APPROVED

**Sunshine Windows Manufacturing, Inc.**

## NOTICE OF ACCEPTANCE: EVIDENCE SUBMITTED

**1. EVIDENCE SUBMITTED UNDER PREVIOUS NOA's**

**A. DRAWINGS**

1. Manufacturer's die drawings and sections.
   ***(Submitted under NOA No.10-0105.02)***
2. Drawing No. **SGD09**, titled "Series 2009 Aluminum Sliding Glass Door Impact Resistant Glass", sheets 1 through 14 of 14, dated 12/17/09, with revision #2 dated 10/21/14, prepared by manufacturer, signed and sealed by Francisco Hernandez, P.E.

**B. TESTS**

1. Test reports on: 1) Air Infiltration Test, per FBC, TAS 202-94
   2) Uniform Static Air Pressure Test, Loading per FBC, TAS 202-94
   3) Water Resistance Test, per FBC, TAS 202-94
   4) Large Missile Impact Test per FBC, TAS 201-94
   5) Cyclic Wind Pressure Loading per FBC, TAS 203-94
   6) Forced Entry Test, Type "C" sliding door, Grade 10, Level LV 1 per ASTM F 842 and per FBC 2411 3.2.1, TAS 202–94

   along with marked-up drawings and installation diagram of an aluminum sliding glass door, prepared by Fenestration Testing Laboratory, Inc., Test Report No. **FTL-5856**, dated 11/04/09, signed and sealed by Julio E. Gonzalez, P.E.
   ***(Submitted under NOA No.10-0105.02)***

**C. CALCULATIONS**

1. Anchor verification calculations and structural analysis, complying with **FBC 5th Edition (2014)**, dated 10/21/14, prepared, signed and sealed by Francisco Hernandez, P.E.
2. Glazing complies with **ASTM E1300-04**

**D. QUALITY ASSURANCE**

1. Miami-Dade Department of Regulatory and Economic Resources (RER).

**E. MATERIAL CERTIFICATIONS**

1. Notice of Acceptance No. **14-0916.11** issued to **Kuraray America, Inc.** for their **"SentryGlas® (Clear and White) Glass Interlayers"** dated 06/25/15, expiring on 07/04/18.
2. Pecora Corp. Part No. **Pecora 895 EPDM exterior glazing gasket** complying with ASTM C 794-30 pli, ASTM D 412- Tension of 550 PSI, ASTM D 624-40 lbs./in,, ASTM D 2240- Hardness Shore A 27 Durometer, ASTM C 510-None, ASTM D 471-70 HRS 257° F and ASTM D 3835-3.0 HRS 180°F, ASTM C 719-±50%, ASTM D 3960-12g/L, ASTM C 679-3hrs. 7 to 14 days, ASTM C 639-Nil.

**Sifang Zhao, P.E.**
**Product Control Plan Examiner**
**NOA No. 18-1025.05**
**Expiration Date: October 06, 2020**
**Approval Date: February 28, 2019**

## NOTICE OF ACCEPTANCE: EVIDENCE SUBMITTED

**F. STATEMENTS**

1. Statement letter of conformance, complying with **FBC 6th Edition (2017),** dated October 14, 2017, issued, signed and sealed by Francisco Hernandez, P.E.
2. Laboratory compliance letter for the Test Report No. **FTL-5856**, dated 11/10/09, signed and sealed by Julio E. Gonzalez, P.E.
   ***(Submitted under NOA No.10-0105.02)***

**G. OTHERS**

1. Notice of Acceptance No. **14-1112.09**, issued to Sunshine Windows Manufacturing, Inc. for their Series "2009" Aluminum Sliding Glass Door - L.M.I., approved on 10/15/15 and expiring on 10/06/20.

**2 NEW EVIDENCE SUBMITTED**

**A. DRAWINGS**

1. Drawing No. **SGD18**, titled "Series 2009 Aluminum Sliding Glass Door Impact Resistant Glass", sheets 1 through 16 of 16, dated 10/10/18, with revision #1 dated 10/10/18, prepared by manufacturer, signed and sealed by Francisco Hernandez, P.E.

**B. TESTS**

1. Test reports on: 1) Air Infiltration Test, per FBC, TAS 202-94
   2) Uniform Static Air Pressure Test, Loading per FBC, TAS 202-94
   3) Water Resistance Test, per FBC, TAS 202-94
   4) Large Missile Impact Test per FBC, TAS 201-94
   5) Cyclic Wind Pressure Loading per FBC, TAS 203-94
   6) Forced Entry Test, Type "C" sliding door, Grade 10, Level LV 1 per ASTM F 842 and per FBC 2411 3.2.1, TAS 202–94

   along with marked-up drawings and installation diagram of an aluminum sliding glass door, prepared by Fenestration Testing Laboratory, Inc., Test Report No. **FTL-9693**, dated 07/19/2018, signed and sealed by Idalmis Ortega , P.E.

**C. CALCULATIONS**

1. None.

**D. QUALITY ASSURANCE**

1. Miami-Dade Department of Regulatory and Economic Resources (RER)

**E. MATERIAL CERTIFICATIONS**

1. Notice of Acceptance No. **17-1114.14** issued to **Kuraray America, Inc.** for their **"Trosifol® UltraClear, Clear and Color PVB Glass Interlayers"** dated 01/18/18, expiring on 07/04/19.

**Sifang Zhao, P.E.**
**Product Control Plan Examiner**
**NOA No. 18-1025.05**
**Expiration Date: October 06, 2020**
**Approval Date: February 28, 2019**

## NOTICE OF ACCEPTANCE: EVIDENCE SUBMITTED

### F. STATEMENTS

1. Statement letter of conformance, complying with **FBC 6th Edition (2017)** and no financial interest, dated 01/18/2019, issued, signed and sealed by Francisco Hernandez, P.E.

### G. OTHERS

1. Notice of Acceptance No. **17-1025.06**, issued to Sunshine Windows Manufacturing, Inc. for their Series "2009" Aluminum Sliding Glass Door - L.M.I., approved on 01/11/18 and expiring on 10/06/2020.

**Sifang Zhao, P.E.**
**Product Control Plan Examiner**
**NOA No. 18-1025.05**
**Expiration Date: October 06, 2020**
**Approval Date: February 28, 2019**

## GENERAL NOTES:

1.– THIS PRODUCT MEETS THE REQUIREMENTS OF FBC 5TH EDITION (2014) AND FBC 6TH EDITION (2017).

2.– SHUTTERS ARE NOT REQUIRED.

3.– REFERENCE TEST REPORT FTL–5856 DATED ON NOV. 4TH, 2009 FOR DOORS WITH GLASS TYPE A (7/16" LAMINATED LMI) AND FTL–9693 DATED 7/19/2018 FOR GLASS TYPE B (5/16" LAMINATED LMI).

4.– FOR ANCHOR SPACING FOR GLASS TYPE A REFER TO TYPICAL ELEVATIONS ON SHEET 3 OF 16.

5.– FOR ANCHOR CLUSTERS FOR GLASS TYPE A REFER TO DETAILS ON SHEET 12 OF 16.

6.– FOR ANCHOR SPACING FOR GLASS TYPE B REFER TO TYPICAL ELEVATIONS ON SHEET 4 OF 16.

7.– FOR ANCHOR CLUSTERS FOR GLASS TYPE B REFER TO DETAILS ON SHEET 12 OF 16.

8.– FOR DESCRIPTION OF ANCHORS NOT INCLUDED IN CLUSTERS REFER TO SECTIONS ON SHEETS 14 THRU 16.

9.– WOOD BUCKS NOT INCLUDED IN THE SCOPE OF THIS PRODUCT APPROVAL SHALL BE PROPERLY ANCHORED AND SEALED TO SUSTAIN AND TRANSFER THE LOADS IMPOSED BY THE GLAZING SYSTEM TO THE STRUCTURE AND SHALL BE APPROVED BY THE BUILDING OFFICIAL PRIOR TO DOOR INSTALLATION.

10.– WOOD HOST STRUCTURE SHALL BE SOUTHERN YELLOW PINE G = 0.55 OF GREATER DENSITY.

11.– CONCRETE / MASONRY STRUCTURE FOR UNIT ATTACHMENT SHALL COMPLY WITH THE FOLLOWING REQUIREMENTS:

- CONCRETE STRENGTH Fc'28 = 3000 PSI MIN.
- CMU AS PER ASTM C90. CMU MUST BE 8–INCH THICK, NORMAL WEIGHT BLOCKS WITH A MINIMUM COMPRESSIVE STRENGTH OF 1.9 KSI.
- FILLED CMU Fm' = 2000 PSI MIN.

12.– ALUMINUM HOST STRUCTURE NOT INCLUDED IN THE SCOPE OF THIS PRODUCT APPROVAL. THE THICKNESS OF THE ALUMINUM HOST STRUCTURE SHALL NOT BE LESS THAN 1/8". ALUMINUM SHALL BE 6063–T6 AND SHALL BE APPROVED BY BUILDING OFFICIAL PRIOR TO DOOR INSTALLATION.

13.– ALUMINUM IN CONTACT WITH DISSIMILAR MATERIALS SHALL BE PROTECTED (BY OTHERS) AS SPECIFIED IN FBC 6TH EDITION (2017).

14.– STEEL HOST STRUCTURE NOT INCLUDED IN THE SCOPE OF THIS PRODUCT APPROVAL SHALL NOT BE LESS THAN 1/8" THICK. STEEL SHALL BE Fy = 36 KSI MIN. STEEL STRUCTURE SHALL BE APPROVED BY BUILDING OFFICIAL PRIOR TO DOOR INSTALLATION.

15.– COLONIAL MUNTINS CAN BE APPLIED.

16.– USE NON–SHRINK, NON–METALLIC HYDRAULIC CEMENT GROUT PER ASTM C1107/C1107M STANDARD SPECIFICATION FOR PACKAGED DRY.

17.– GLASS TYPE A : 7/16" NOMINAL LAMINATED GLASS COMPOSED OF (2) 3/16" HEAT STRENGTHENED GLASS WITH 0.09" SENTRYGLAS INTERLAYING FILM BY KURARAY AMERICA, INC. (SEE GLAZING DETAIL FOR GLASS TYPE A)

18.– GLASS TYPE B : 5/16" NOMINAL LAMINATED GLASS COMPOSED OF (2) 1/8" HEAT STRENGTHENED GLASS WITH 0.09" TROSIFOL PVB INTERLAYING FILM BY KURARAY AMERICA, INC. (SEE GLAZING DETAIL FOR GLASS TYPE B)

19.– GLASS SHALL PENETRATE 0.904" INTO THE ALUMINUM FRAME POCKET AND WILL BE SECURED WITH DOW 899 SILICONE SEALANT ON THE INTERIOR AND VINYL BULB 3025 ON THE EXTERIOR.

20.– DOORS REQUIRING FULL USER PASSAGE SHALL COMPLY WITH EGRESS REQUIREMENTS OF FBC 6TH EDITION (2017).

## INDEX OF DRAWINGS



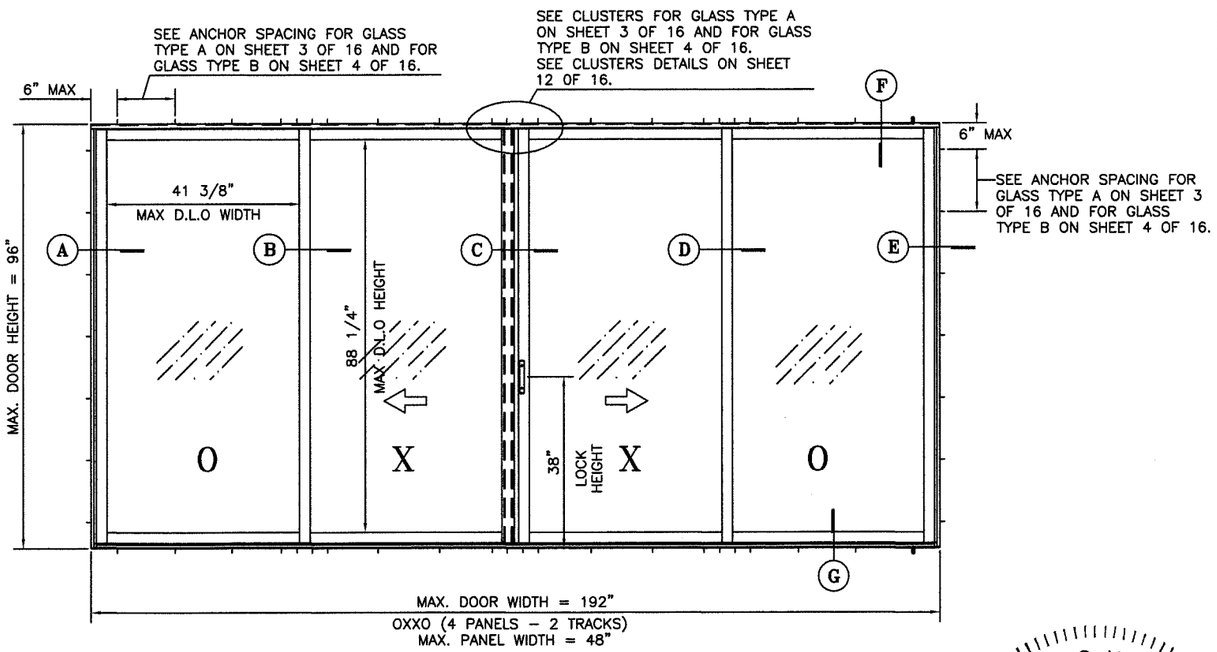


TYPICAL ELEVATION

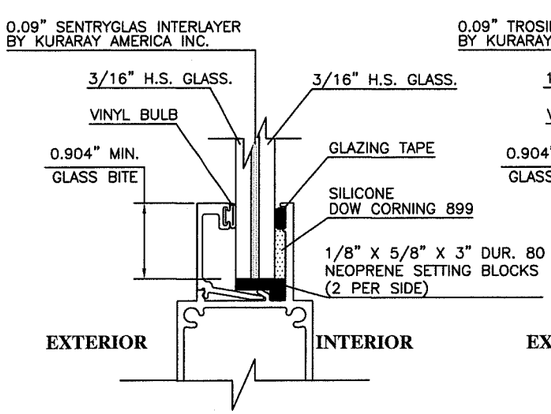


GLASS TYPE A
GLAZING DETAIL

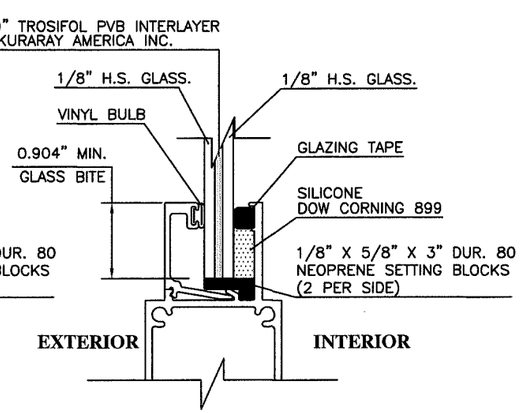


GLASS TYPE B
GLAZING DETAIL

# GENERAL NOTES, INDEX OF DRAWINGS AND GLAZING DETAILS.

PRODUCT REVISED
as complying with the Florida Building Code
Acceptance No. 18-1025.05
Expiration Date 10/06/2020
By
Miami-Dade Product Control

FRANCISCO HERNANDEZ
LICENSE
No. 51393
STATE OF FLORIDA
PROFESSIONAL ENGINEER
1/1/19
FRANCISCO HERNANDEZ
FLORIDA PE # 51393


Sunshine Windows Manufacturing, Inc.
1745 W. 33rd Place
Hialeah, Florida 33012
Ph: (305)364–9952
Fax:(305)828–5118


SERIES 2009
ALUMINUM SLIDING GLASS DOOR
IMPACT RESISTANT GLASS

| No | DATE | REVISION |
|---|---|---|
| 1 | 10/10/18 | DWG No. SGD18 SUPERSEDES DWG No. SGD09. |

DRAWING No. SGD18
DATE: 10/10/18
SCALE: N.T.S.

## DESIGN PRESSURES CHART FOR GLASS TYPE A

| PANEL DIMENSION IN INCHES | | NUMBER OF ANCHORS AT EACH CLUSTER | DESIGN PRESSURES WITH 3 3/4" SILL HEIGHT | | | | DESIGN PRESSURES WITH 5" SILL HEIGHT | | | |
|---|---|---|---|---|---|---|---|---|---|---|
| | | | ATTACHMENT TO CONCRETE AND METAL (PSF) | | ATTACHMENT TO WOOD (PSF) | | ATTACHMENT TO CONCRETE AND METAL (PSF) | | ATTACHMENT TO WOOD (PSF) | |
| HEIGHT | WIDTH | | EXT. (+) | INT. (−) | EXT. (+) | INT. (−) | EXT. (+) | INT. (−) | EXT. (+) | INT. (−) |
| 80 | 24 | 4 | 93.33 | 120.71 | 93.33 | 116.47 | 110.00 | 120.71 | 110.00 | 116.47 |
| | 30 | | 93.33 | 101.02 | 93.33 | 97.48 | 101.02 | 101.02 | 97.48 | 97.48 |
| | 36 | | 88.26 | 88.26 | 85.16 | 85.16 | 88.26 | 88.26 | 85.16 | 85.16 |
| | 48 | | 73.29 | 73.29 | 70.71 | 70.71 | 73.29 | 73.29 | 70.71 | 70.71 |
| | 24 | 6 | 93.33 | 125.00 | 93.33 | 125.00 | 110.00 | 125.00 | 110.00 | 125.00 |
| | 30 | | 93.33 | 125.00 | 93.33 | 125.00 | 110.00 | 125.00 | 110.00 | 125.00 |
| | 36 | | 93.33 | 125.00 | 93.33 | 125.00 | 110.00 | 125.00 | 110.00 | 125.00 |
| | 48 | | 93.33 | 109.93 | 93.33 | 106.07 | 109.93 | 109.93 | 106.07 | 106.07 |
| | 36 | 8 | 93.33 | 125.00 | 93.33 | 125.00 | 110.00 | 125.00 | 110.00 | 125.00 |
| | 48 | | 93.33 | 125.00 | 93.33 | 125.00 | 110.00 | 125.00 | 110.00 | 125.00 |
| 96 | 24 | 4 | 93.33 | 97.71 | 93.33 | 94.29 | 97.71 | 97.71 | 94.29 | 94.29 |
| | 30 | | 81.07 | 81.07 | 78.22 | 78.22 | 81.07 | 81.07 | 78.22 | 78.22 |
| | 36 | | 70.15 | 70.15 | 67.69 | 67.69 | 70.15 | 70.15 | 67.69 | 67.69 |
| | 48 | | 57.00 | 57.00 | 55.00 | 55.00 | 57.00 | 57.00 | 55.00 | 55.00 |
| | 24 | 6 | 93.33 | 125.00 | 93.33 | 125.00 | 110.00 | 125.00 | 110.00 | 125.00 |
| | 30 | | 93.33 | 121.60 | 93.33 | 117.33 | 110.00 | 121.60 | 110.00 | 117.33 |
| | 36 | | 93.33 | 105.23 | 93.33 | 101.54 | 105.23 | 105.23 | 101.54 | 101.54 |
| | 48 | | 85.50 | 85.50 | 82.50 | 82.50 | 85.50 | 85.50 | 82.50 | 82.50 |
| | 30 | 8 | 93.33 | 125.00 | 93.33 | 125.00 | 110.00 | 125.00 | 110.00 | 125.00 |
| | 36 | | 93.33 | 125.00 | 93.33 | 125.00 | 110.00 | 125.00 | 110.00 | 125.00 |
| | 48 | | 93.33 | 114.00 | 93.33 | 110.00 | 110.00 | 114.00 | 110.00 | 110.00 |

## DESIGN PRESSURES CHART FOR GLASS TYPE B

| PANEL DIMENSION IN INCHES | | NUMBER OF ANCHORS AT EACH CLUSTER | DESIGN PRESSURES WITH 3" SILL HEIGHT | | | |
|---|---|---|---|---|---|---|
| | | | ATTACHMENT TO CONCRETE AND METAL (PSF) | | ATTACHMENT TO WOOD (PSF) | |
| HEIGHT | WIDTH | | EXT. (+) | INT. (−) | EXT. (+) | INT. (−) |
| 80 | 24 | 4 | 66.67 | 80.00 | 66.67 | 80.00 |
| | 30 | | 66.67 | 80.00 | 66.67 | 80.00 |
| | 36 | | 66.67 | 80.00 | 66.67 | 80.00 |
| | 48 | | 66.67 | 73.29 | 66.67 | 70.71 |
| | 24 | 6 | 66.67 | 80.00 | 66.67 | 80.00 |
| | 30 | | 66.67 | 80.00 | 66.67 | 80.00 |
| | 36 | | 66.67 | 80.00 | 66.67 | 80.00 |
| | 48 | | 66.67 | 80.00 | 66.67 | 80.00 |
| 96 | 24 | 4 | 66.67 | 80.00 | 66.67 | 80.00 |
| | 30 | | 66.67 | 80.00 | 66.67 | 78.22 |
| | 36 | | 66.67 | 70.15 | 67.69 | 67.69 |
| | 48 | | 57.00 | 57.00 | 55.00 | 55.00 |
| | 24 | 6 | 66.67 | 80.00 | 66.67 | 80.00 |
| | 30 | | 66.67 | 80.00 | 66.67 | 80.00 |
| | 36 | | 66.67 | 80.00 | 66.67 | 80.00 |
| | 48 | | 66.67 | 74.30 | 66.67 | 74.30 |

**WIND LOAD A.S.D. FACTOR NOTE:**

THE DESIGN PRESSURES SHOWN ON THESE CHARTS ARE FOR ALLOWABLE STRESS DESIGN. WIND LOADS CALCULATED BASED UPON "ULTIMATE WIND SPEED" AS DETERMINED FROM ASCE 7-10 ARE PERMITTED TO BE MULTIPLIED BY 0.6 FOR COMPARISON BETWEEN THE ACTING WIND LOADS AND THE DESIGN PRESSURE OF THE UNITS.

PRODUCT REVISED
as complying with the Florida Building Code
Acceptance No. 18-1025.05
Expiration Date 10/06/2020
By
Miami Dade Product Control

FRANCISCO HERNANDEZ
LICENSE
No. 51393
1-1-19
STATE OF FLORIDA
PROFESSIONAL ENGINEER
FRANCISCO HERNANDEZ
FLORIDA PE # 51393


Sunshine Windows Manufacturing, Inc.
1745 W. 33rd Place
Hialeah, Florida 33012
Ph: (305)364-9952
Fax:(305)828-5118


SERIES 2009
ALUMINUM SLIDING GLASS DOOR
IMPACT RESISTANT GLASS

| No | DATE | REVISION |
|---|---|---|
| 1 | 10/10/18 | DWG No. SGD18 SUPERSEDES DWG No. SGD09. |

DRAWING No. SGD18
DATE: 10/10/18
SCALE: N.T.S.

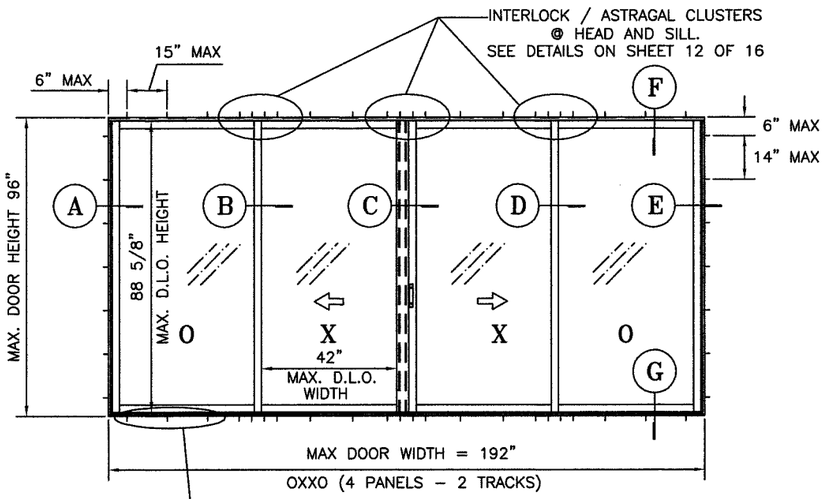


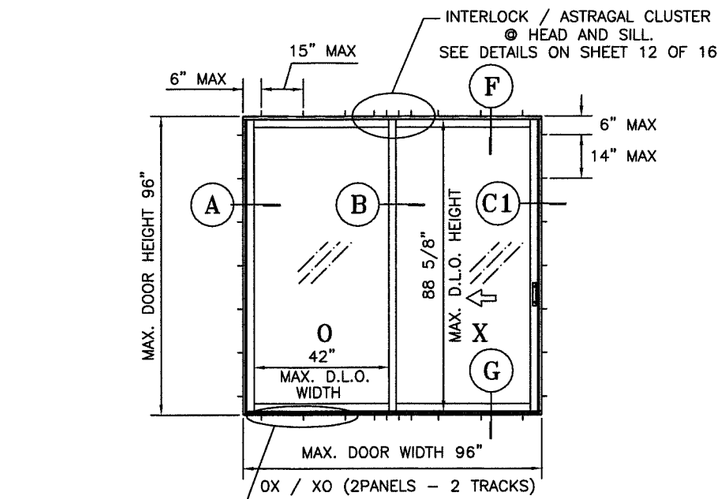


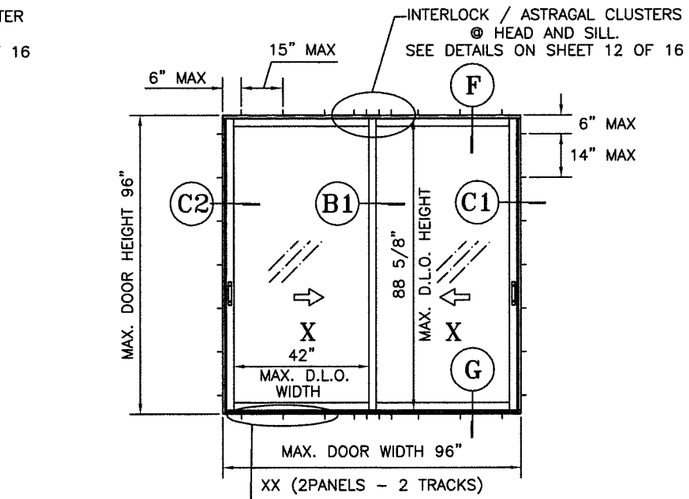


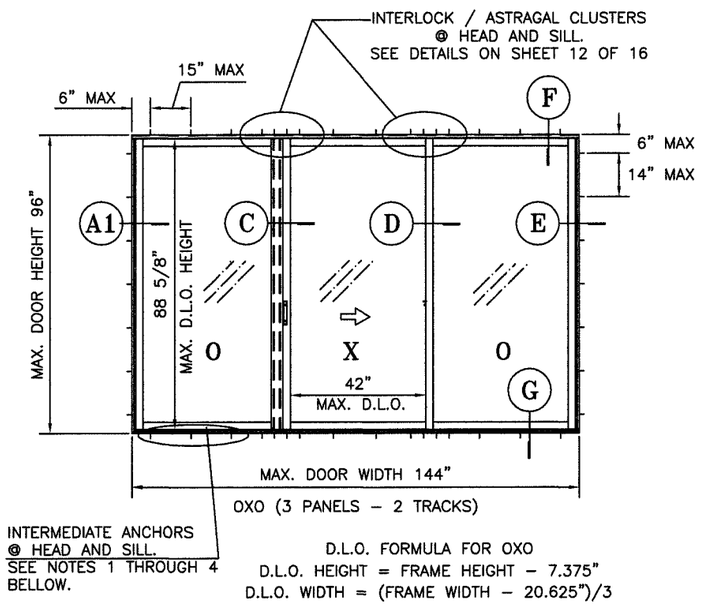


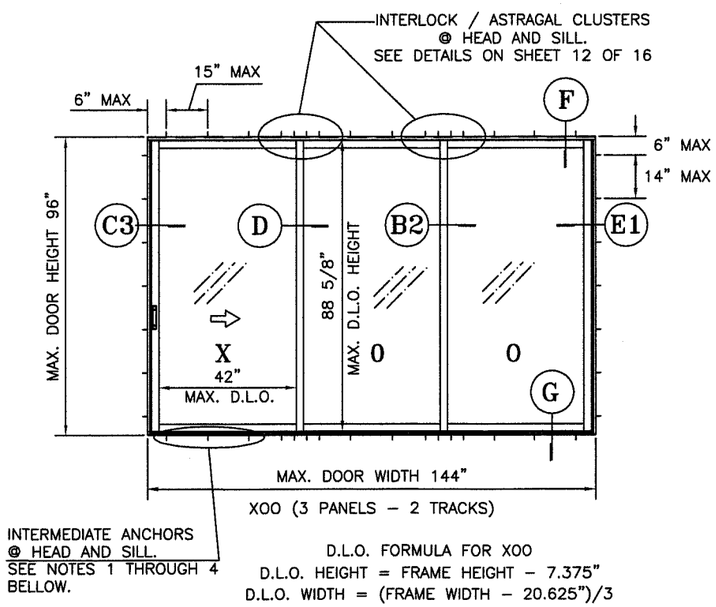


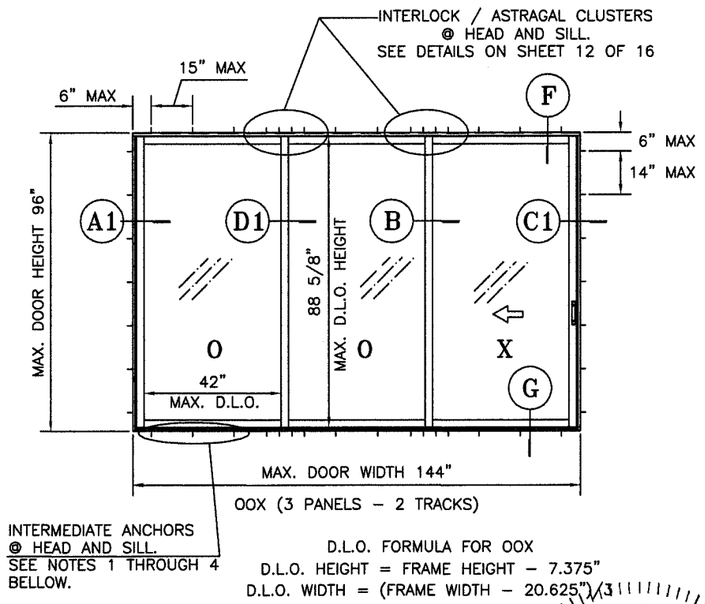


NOTES:

1.– SEE GLAZING DETAIL FOR GLASS TYPE A ON SHEET 1 OF 16.
2.– ALL ANCHORS SHOWN IN ELEVATIONS ARE IN PAIRS.
3.– NUMBER OF CLUSTERS VARY ACCORDING TO DOOR CONFIGURATION.
4.– INTERMEDIATE HEAD AND SILL ANCHORS SHALL BE ADDED TO ANCHORS OF CLUSTERS SELECTED FROM CHARTS ON SHEET 2 OF 16 PLUS ANCHORS ON JAMBS TO FIGURE TOTAL NUMBER OF FRAME ANCHORS.

# ELEVATIONS OF APPROVED CONFIGURATIONS FOR GLASS TYPE A

PRODUCT REVISED
as complying with the Florida Building Code
Acceptance No. 18-1025.05
Expiration Date 10/06/2020
By
Miami Dade Product Control

FRANCISCO HERNANDEZ
LICENSE
No. 51393
STATE OF FLORIDA
PROFESSIONAL ENGINEER
1-1-19
FRANCISCO HERNANDEZ
FLORIDA PE # 51393

Sunshine Windows Manufacturing, Inc.
1745 W. 33rd Place
Hialeah, Florida 33012
Ph: (305)364-9952
Fax:(305)828-5118

SERIES 2009
ALUMINUM SLIDING GLASS DOOR
IMPACT RESISTANT GLASS

| No | DATE | REVISION |
|---|---|---|
| 1 | 10/10/18 | DWG No. SGD18 SUPERSEDES DWG No. SGD09. |

DRAWING No. SGD18
DATE: 10/10/18
SCALE: N.T.S.

SHEET 3 OF 16

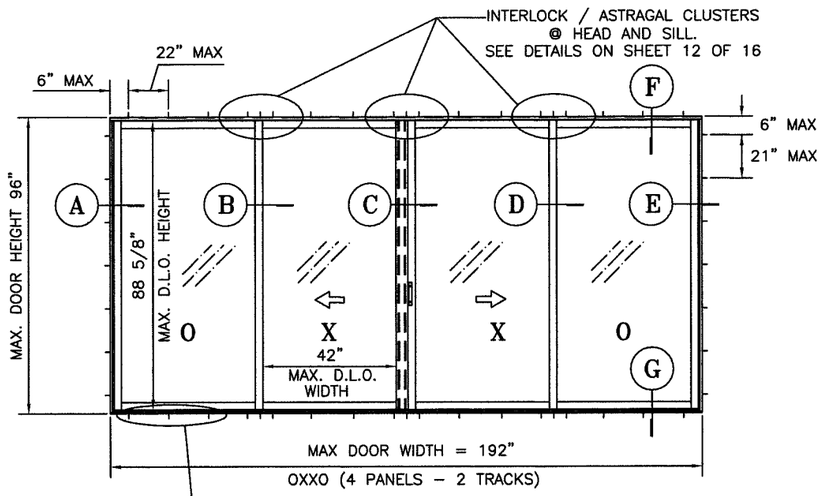


INTERMEDIATE ANCHORS @ HEAD AND SILL. SEE NOTES 1 THROUGH 4 BELLOW.

D.L.O. FORMULA FOR OXXO
D.L.O. HEIGHT = FRAME HEIGHT – 7.375"
D.L.O. WIDTH = (FRAME WIDTH – 25")/4

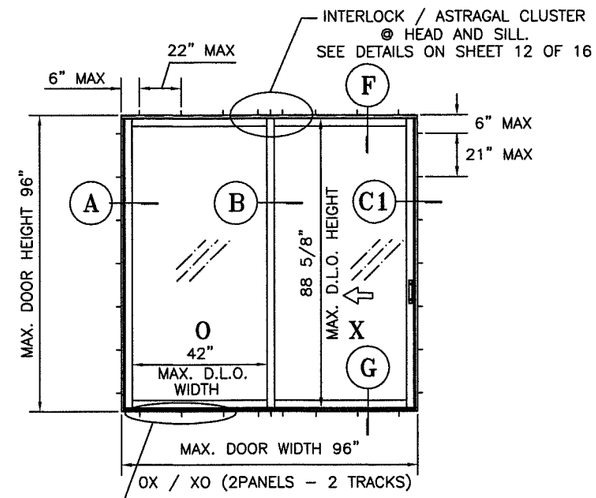


INTERMEDIATE ANCHORS @ HEAD AND SILL. SEE NOTES 1 THROUGH 4 BELLOW.

D.L.O. FORMULA FOR OX/XO
D.L.O. HEIGHT = FRAME HEIGHT – 7.375"
D.L.O. WIDTH = (FRAME WIDTH – 13")/2

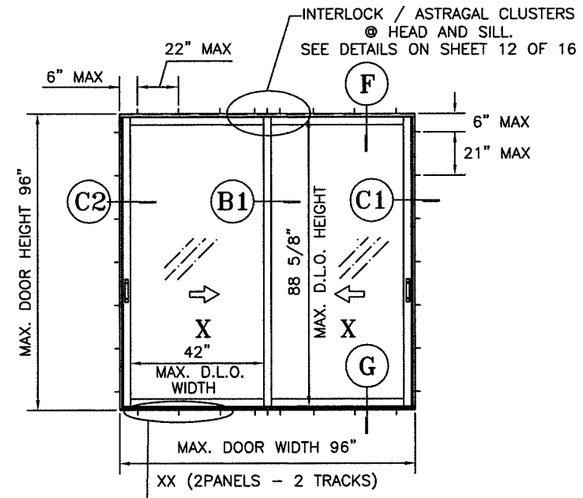


INTERMEDIATE ANCHORS @ HEAD AND SILL. SEE NOTES 1 THROUGH 4 BELLOW.

D.L.O. FORMULA FOR XX
D.L.O. HEIGHT = FRAME HEIGHT – 7.375"
D.L.O. WIDTH = (FRAME WIDTH – 13")/2

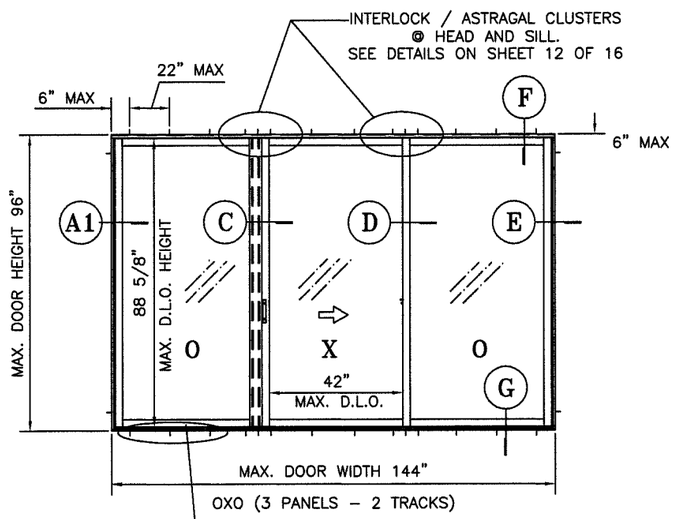


INTERMEDIATE ANCHORS @ HEAD AND SILL. SEE NOTES 1 THROUGH 4 BELLOW.

D.L.O. FORMULA FOR OXO
D.L.O. HEIGHT = FRAME HEIGHT – 7.375"
D.L.O. WIDTH = (FRAME WIDTH – 20.625")/3

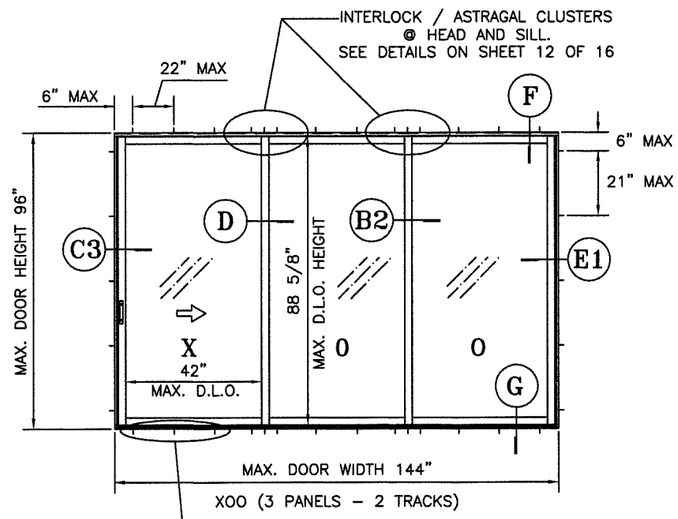


INTERMEDIATE ANCHORS @ HEAD AND SILL. SEE NOTES 1 THROUGH 4 BELLOW.

D.L.O. FORMULA FOR XOO
D.L.O. HEIGHT = FRAME HEIGHT – 7.375"
D.L.O. WIDTH = (FRAME WIDTH – 20.625")/3

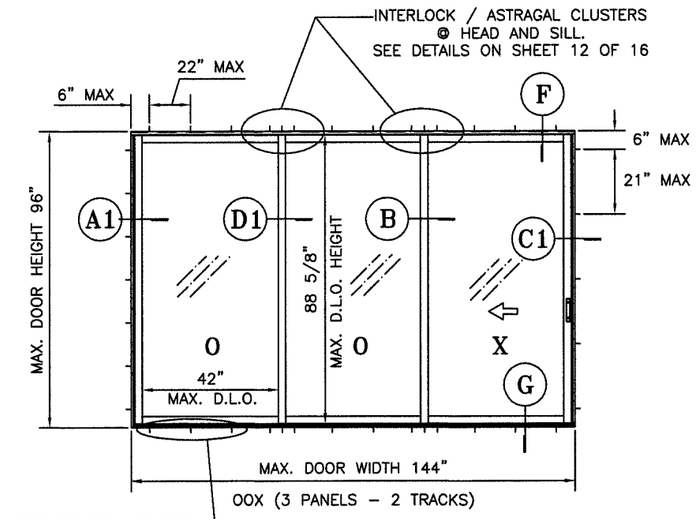


INTERMEDIATE ANCHORS @ HEAD AND SILL. SEE NOTES 1 THROUGH 4 BELLOW.

D.L.O. FORMULA FOR OOX
D.L.O. HEIGHT = FRAME HEIGHT – 7.375"
D.L.O. WIDTH = (FRAME WIDTH – 20.625")/3

NOTES:

1.– SEE GLAZING DETAIL FOR GLASS TYPE B ON SHEET 1 OF 16.
2.– ALL ANCHORS SHOWN IN ELEVATIONS ARE IN PAIRS.
3.– NUMBER OF CLUSTERS VARY ACCORDING TO DOOR CONFIGURATION.
4.– INTERMEDIATE HEAD AND SILL ANCHORS SHALL BE ADDED TO ANCHORS OF CLUSTERS SELECTED FROM CHARTS ON SHEET 2 OF 16 PLUS ANCHORS ON JAMBS TO FIGURE TOTAL NUMBER OF FRAME ANCHORS.

# ELEVATIONS OF APPROVED CONFIGURATIONS FOR GLASS TYPE B

PRODUCT REVISED
as complying with the Florida Building Code
Acceptance No. 18-1025.05
Expiration Date 10/06/2020
By
Miami Dade Product Control

FRANCISCO HERNANDEZ
LICENSE
No 51393
STATE OF FLORIDA
PROFESSIONAL ENGINEER
1-1-19
FRANCISCO HERNANDEZ
FLORIDA PE # 51393


Sunshine Windows Manufacturing, Inc.
1745 W. 33rd Place
Hialeah, Florida 33012
Ph: (305)364–9952
Fax:(305)828–5118


SERIES 2009
ALUMINUM SLIDING GLASS DOOR
IMPACT RESISTANT GLASS

| No | DATE | REVISION |
|---|---|---|
| 1 | 10/10/18 | DWG No. SGD18 SUPERSEDES DWG No. SGD09. |

DRAWING No. SGD18
DATE: 10/10/18
SCALE: 6"=1'–0"

SHEET 4 OF 16

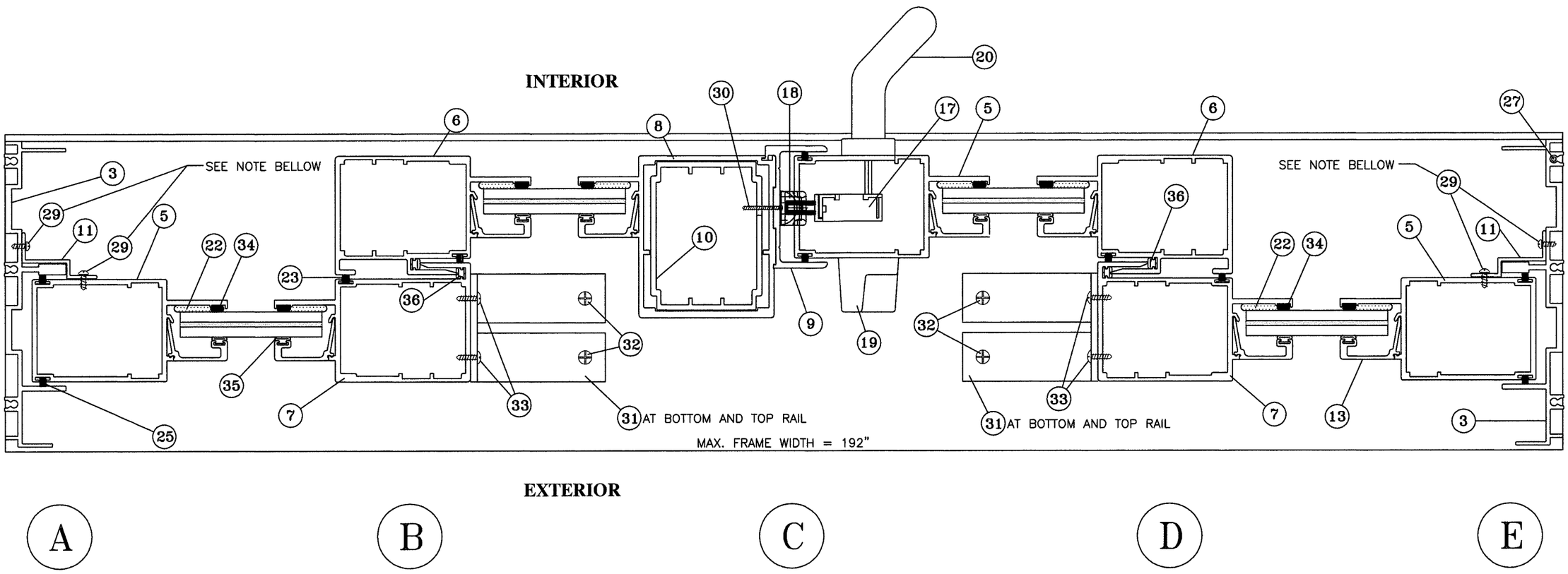


# OXXO (4 PANELS - 2 TRACKS)

**NOTE:**

FIXED PANEL CLIP SCREWS (29) ARE SPACED AS FOLLOWS:

- FIRST SCREW @ 1 1/2" MAX. FROM BOTTOM END OF CLIP (11)
- INTERMEDIATE SCREWS @ 14 1/2" O.C. MAX. ALONG CLIP (11)
- LAST SCREW @ 1 1/2" MAX. FROM TOP END OF CLIP (11)

**FOR INSTALLATION DETAILS SEE SHEETS 14 THRU 16**

## HORIZONTAL SECTIONS

PRODUCT REVISED
as complying with the Florida
Building Code
Acceptance No. 18-1025.05
Expiration Date 10/06/2020
By
Miami Dade Product Control

FRANCISCO HERNANDEZ
LICENSE
No. 51393
STATE OF
FLORIDA
PROFESSIONAL ENGINEER
1-1-19
FRANCISCO HERNANDEZ
FLORIDA PE # 51393

Sunshine Windows
Manufacturing, Inc.
1745 W. 33rd Place
Hialeah, Florida 33012
Ph: (305)364-9952
Fax:(305)828-5118

SERIES 2009
ALUMINUM SLIDING GLASS DOOR
IMPACT RESISTANT GLASS

| No | DATE | REVISION |
|---|---|---|
| 1 | 10/10/18 | DWG No. SGD18 SUPERSEDES DWG No. SGD09. |

DRAWING No.
SGD18
DATE: 10/10/18
SCALE: 6"=1'-0"

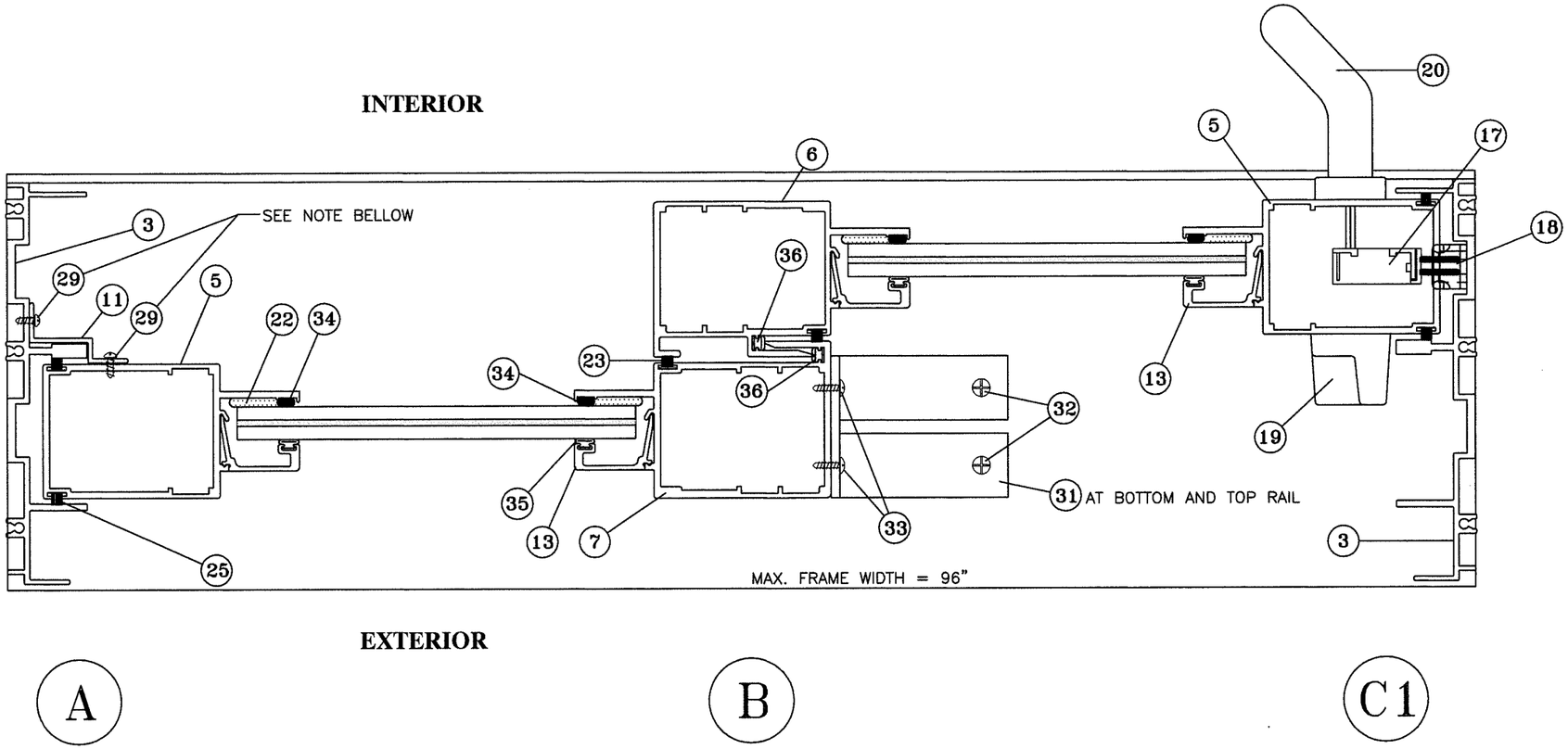


# OX OR XO (2 PANELS - 2 TRACKS)

**NOTE:**

FIXED PANEL CLIP SCREWS (29) ARE SPACED AS FOLLOWS:

- FIRST SCREW @ 1 1/2" MAX. FROM BOTTOM END OF CLIP (11)
- INTERMEDIATE SCREWS @ 14 1/2" O.C. MAX. ALONG CLIP (11)
- LAST SCREW @ 1 1/2" MAX. FROM TOP END OF CLIP (11)

**FOR INSTALLATION DETAILS SEE SHEETS 14 THRU 16**

## HORIZONTAL SECTIONS

PRODUCT REVISED
as complying with the Florida
Building Code
Acceptance No. 18-1025.05
Expiration Date 10/06/2020
By
Miami Dade Product Control

FRANCISCO HERNANDEZ
LICENSE
No. 51393
STATE OF
FLORIDA
PROFESSIONAL ENGINEER
1-1-19
FRANCISCO HERNANDEZ
FLORIDA PE # 51393

Sunshine Windows
Manufacturing, Inc.
1745 W. 33rd Place
Hialeah, Florida 33012
Ph: (305)364-9952
Fax:(305)828-5118

SERIES 2009
ALUMINUM SLIDING GLASS DOOR
IMPACT RESISTANT GLASS

| No | DATE | REVISION |
|---|---|---|
| 1 | 10/10/18 | DWG No. SGD18 SUPERSEDES<br>DWG No. SGD09. |

DRAWING No.
SGD18
DATE: 10/10/18
SCALE: 6"=1'-0"

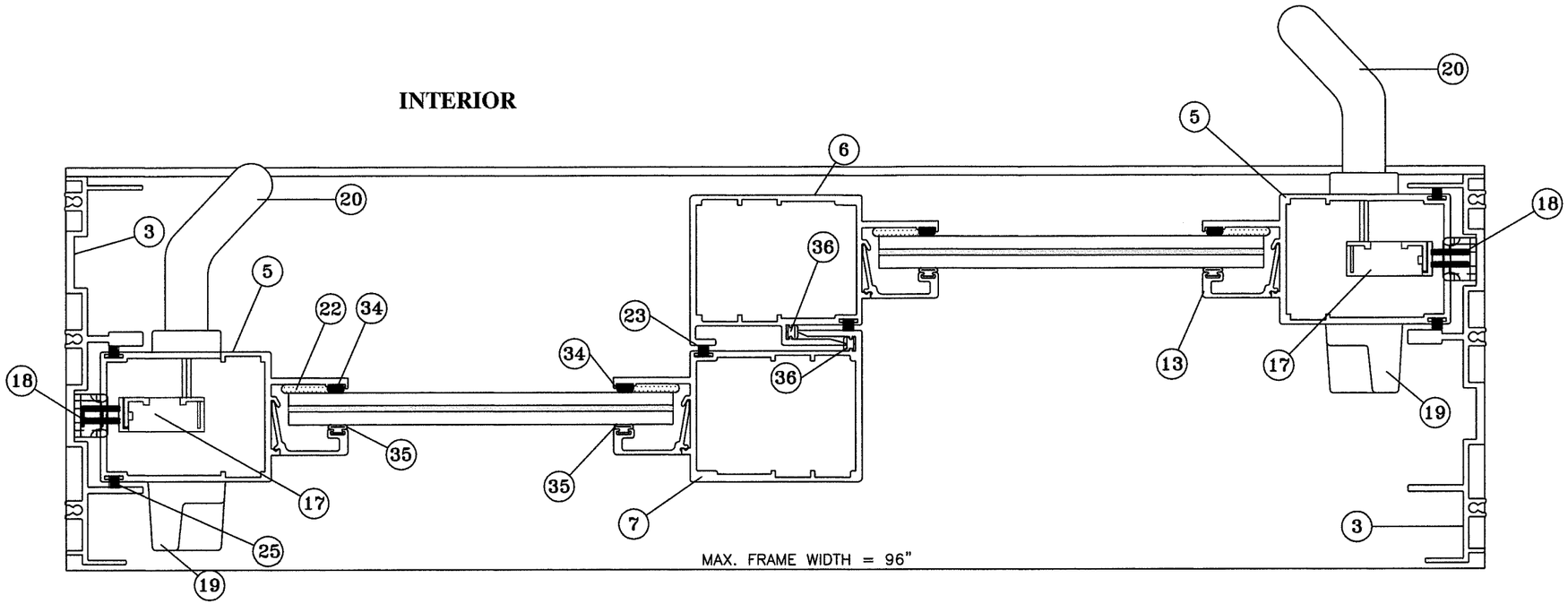


C2 B1 C1

**XX (2 PANELS - 2 TRACKS)**

**FOR INSTALLATION DETAILS SEE SHEETS 14 THRU 16**

# HORIZONTAL SECTIONS

PRODUCT REVISED
as complying with the Florida
Building Code
Acceptance No. 18-1025.05
Expiration Date 10/06/2020
By
Miami Dade Product Control

FRANCISCO HERNANDEZ
LICENSE
No. 51393
STATE OF
FLORIDA
PROFESSIONAL ENGINEER
1-1-19
FRANCISCO HERNANDEZ
FLORIDA PE # 51393

Sunshine Windows
Manufacturing, Inc.
1745 W. 33rd Place
Hialeah, Florida 33012
Ph: (305)364-9952
Fax:(305)828-5118

SERIES 2009
ALUMINUM SLIDING GLASS DOOR
IMPACT RESISTANT GLASS

| No | DATE | REVISION |
|---|---|---|
| 1 | 10/10/18 | DWG No. SGD18 SUPERSEDES DWG No. SGD09. |

DRAWING No. SGD18
DATE: 10/10/18
SCALE: 6"=1'-0"

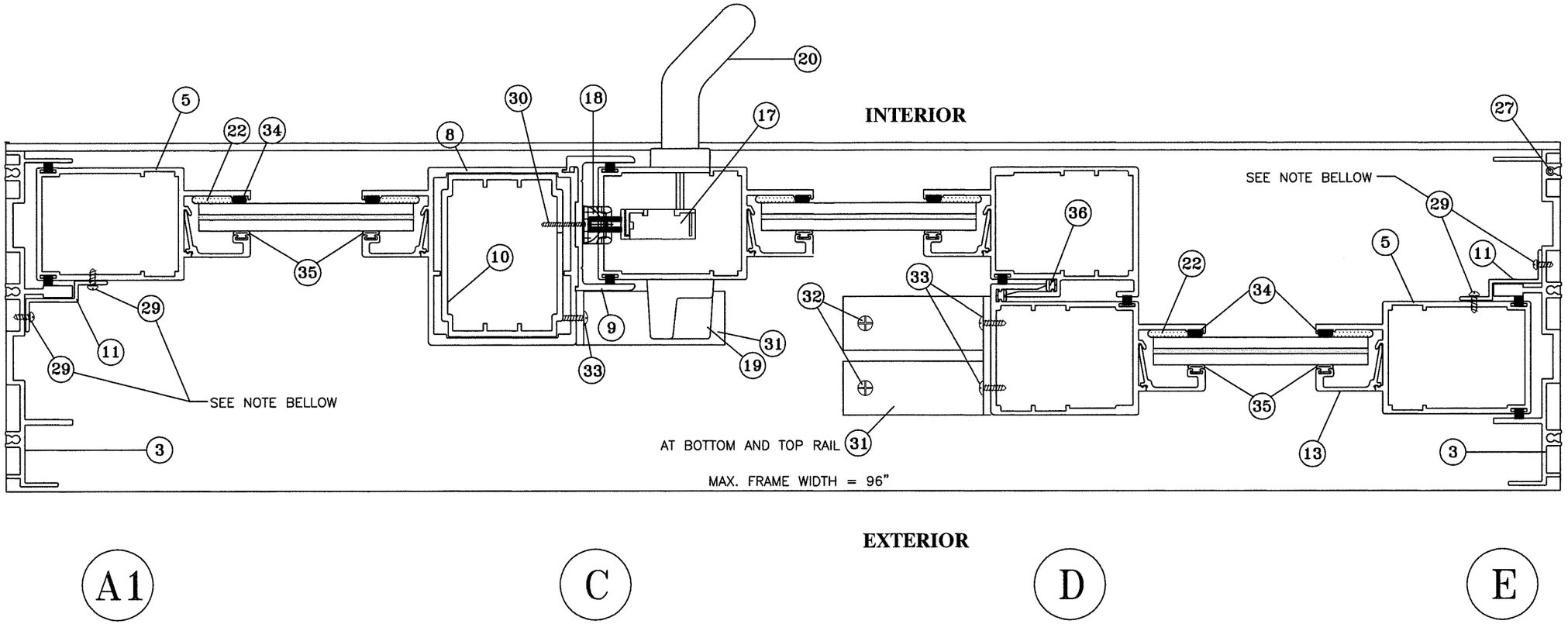


# OXO (3 PANELS - 2 TRACKS)

**NOTE:**

FIXED PANEL CLIP SCREWS (29) ARE SPACED AS FOLLOWS:

- FIRST SCREW @ 1 1/2" MAX. FROM BOTTOM END OF CLIP (11)
- INTERMEDIATE SCREWS @ 14 1/2" O.C. MAX. ALONG CLIP (11)
- LAST SCREW @ 1 1/2" MAX. FROM TOP END OF CLIP (11)

**FOR INSTALLATION DETAILS SEE SHEETS 14 THRU 16**

## HORIZONTAL SECTIONS

PRODUCT REVISED
as complying with the Florida
Building Code
Acceptance No. 18-1025.05
Expiration Date 10/06/2020
By
Miami Dade Product Control

FRANCISCO HERNANDEZ
LICENSE
No. 51393
STATE OF
FLORIDA
PROFESSIONAL ENGINEER
1-1-19
FRANCISCO HERNANDEZ
FLORIDA PE # 51393

Sunshine Windows
Manufacturing, Inc.
1745 W. 33rd Place
Hialeah, Florida 33012
Ph: (305)364-9952
Fax:(305)828-5118

SERIES 2009
ALUMINUM SLIDING GLASS DOOR
IMPACT RESISTANT GLASS

| No | DATE | REVISION |
|---|---|---|
| 1 | 10/10/18 | DWG No. SGD18 SUPERSEDES DWG No. SGD09. |

DRAWING No.
SGD18
DATE: 10/10/18
SCALE: 6"=1'-0"

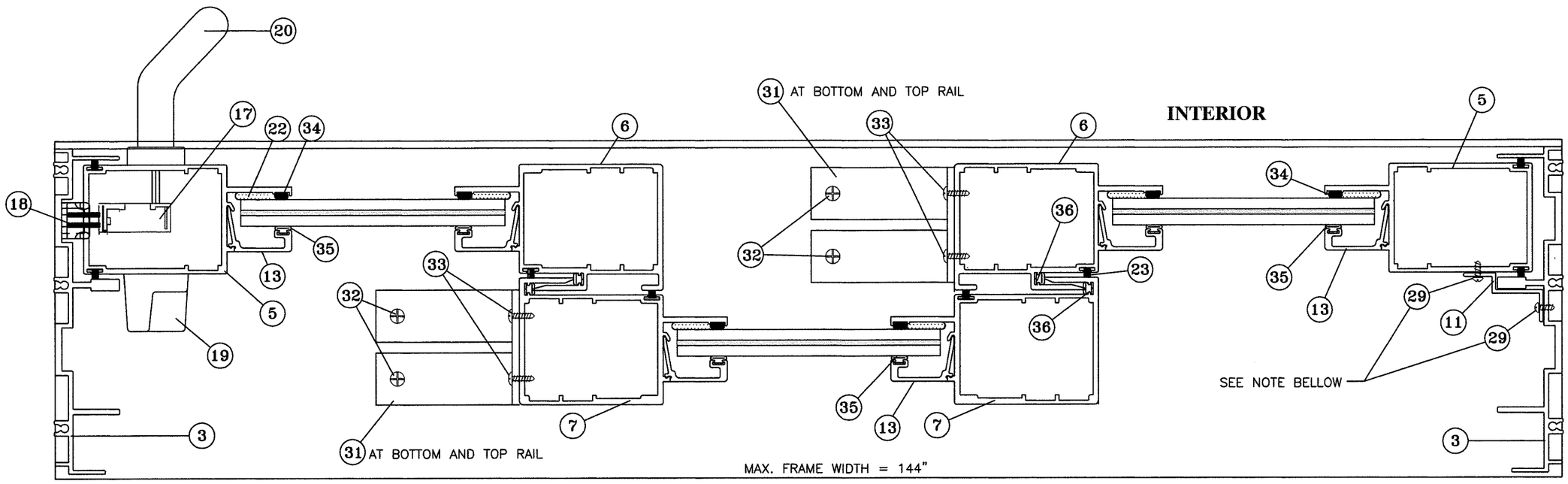


## XOO (3 PANELS - 2 TRACKS)

**NOTE:**

FIXED PANEL CLIP SCREWS (29) ARE SPACED AS FOLLOWS:

- FIRST SCREW @ 1 1/2" MAX. FROM BOTTOM END OF CLIP (11)
- INTERMEDIATE SCREWS @ 14 1/2" O.C. MAX. ALONG CLIP (11)
- LAST SCREW @ 1 1/2" MAX. FROM TOP END OF CLIP (11)

**FOR INSTALLATION DETAILS SEE SHEETS 14 THRU 16**

# HORIZONTAL SECTIONS

PRODUCT REVISED
as complying with the Florida
Building Code
Acceptance No. 18-1025.05
Expiration Date 10/06/2020
By
Miami Dade Product Control

FRANCISCO HERNANDEZ
LICENSE
No. 51393
STATE OF
FLORIDA
PROFESSIONAL ENGINEER
FRANCISCO HERNANDEZ
FLORIDA PE # 51393


Sunshine Windows
Manufacturing, Inc.
1745 W. 33rd Place
Hialeah, Florida 33012
Ph: (305)364-9952
Fax:(305)828-5118


SERIES 2009
ALUMINUM SLIDING GLASS DOOR
IMPACT RESISTANT GLASS

| No | DATE | REVISION |
|---|---|---|
| 1 | 10/10/18 | DWG No. SGD18 SUPERSEDES DWG No. SGD09. |

DRAWING No.
SGD18
DATE: 10/10/18
SCALE: 6"=1'-0"

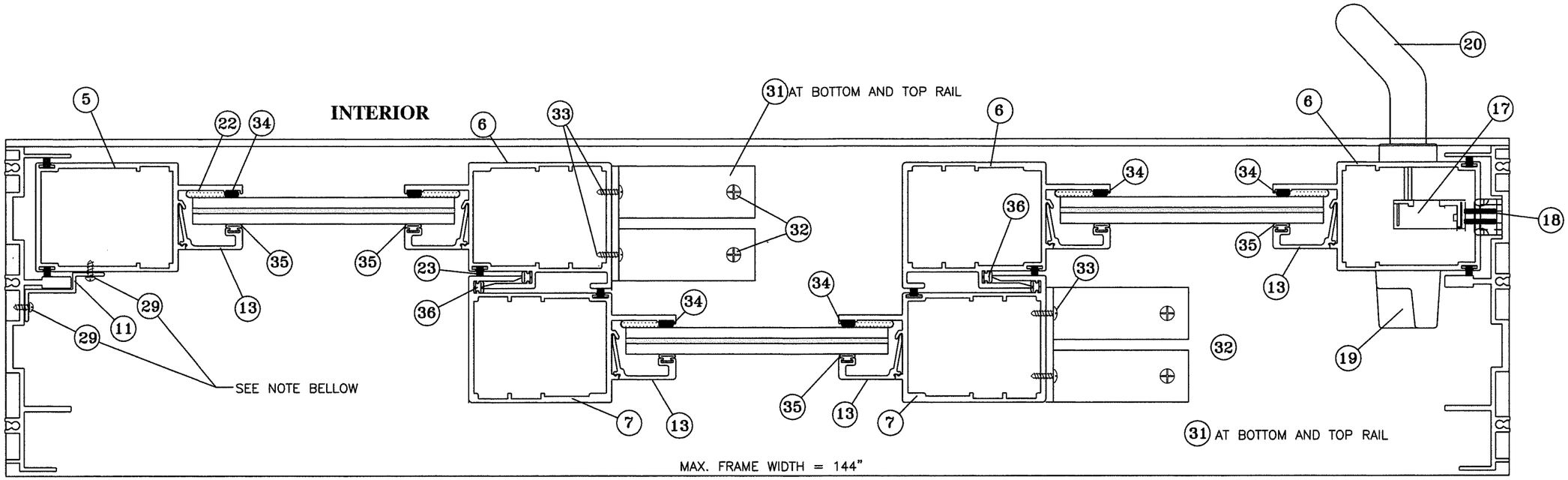


**EXTERIOR**

A1 D1 B C1

# OOX (3 PANELS - 2 TRACKS)

**NOTE:**

FIXED PANEL CLIP SCREWS (29) ARE SPACED AS FOLLOWS:

- FIRST SCREW @ 1 1/2" MAX. FROM BOTTOM END OF CLIP (11)
- INTERMEDIATE SCREWS @ 14 1/2" O.C. MAX. ALONG CLIP (11)
- LAST SCREW @ 1 1/2" MAX. FROM TOP END OF CLIP (11)

**FOR INSTALLATION DETAILS SEE SHEETS 14 THRU 16**

## HORIZONTAL SECTIONS

PRODUCT REVISED
as complying with the Florida Building Code
Acceptance No. 18-1025.05
Expiration Date 10/06/2020
By
Miami Dade Product Control

FRANCISCO HERNANDEZ
LICENSE
No. 51393
1-1-19
STATE OF FLORIDA
PROFESSIONAL ENGINEER
FRANCISCO HERNANDEZ
FLORIDA PE # 51393

Sunshine Windows Manufacturing, Inc.
1745 W. 33rd Place
Hialeah, Florida 33012
Ph: (305)364-9952
Fax:(305)828-5118

SERIES 2009
ALUMINUM SLIDING GLASS DOOR
IMPACT RESISTANT GLASS

| No | DATE | REVISION |
|---|---|---|
| 1 | 10/10/18 | DWG No. SGD18 SUPERSEDES DWG No. SGD09. |

DRAWING No. SGD18
DATE: 10/10/18
SCALE: 6"=1'-0"
SHEET 10 OF 16

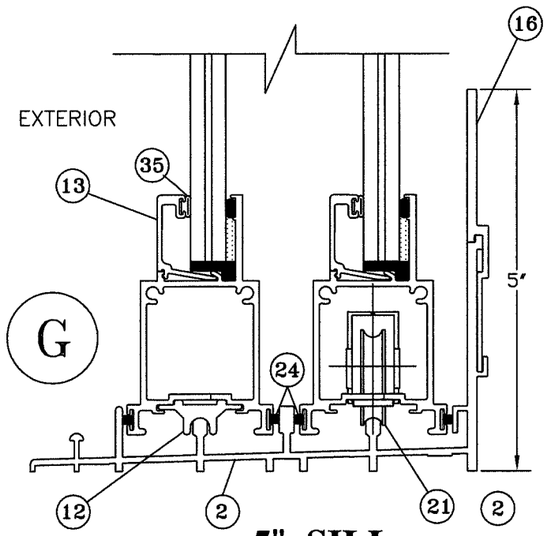


**5" SILL**

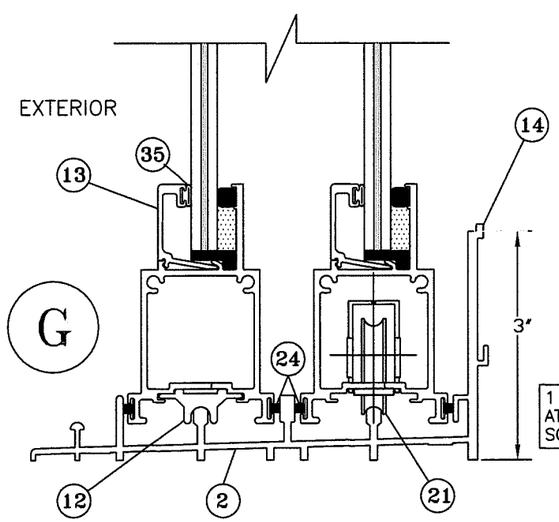


**3" SILL**
**APPROVED ONLY**
**FOR GLASS TYPE B**

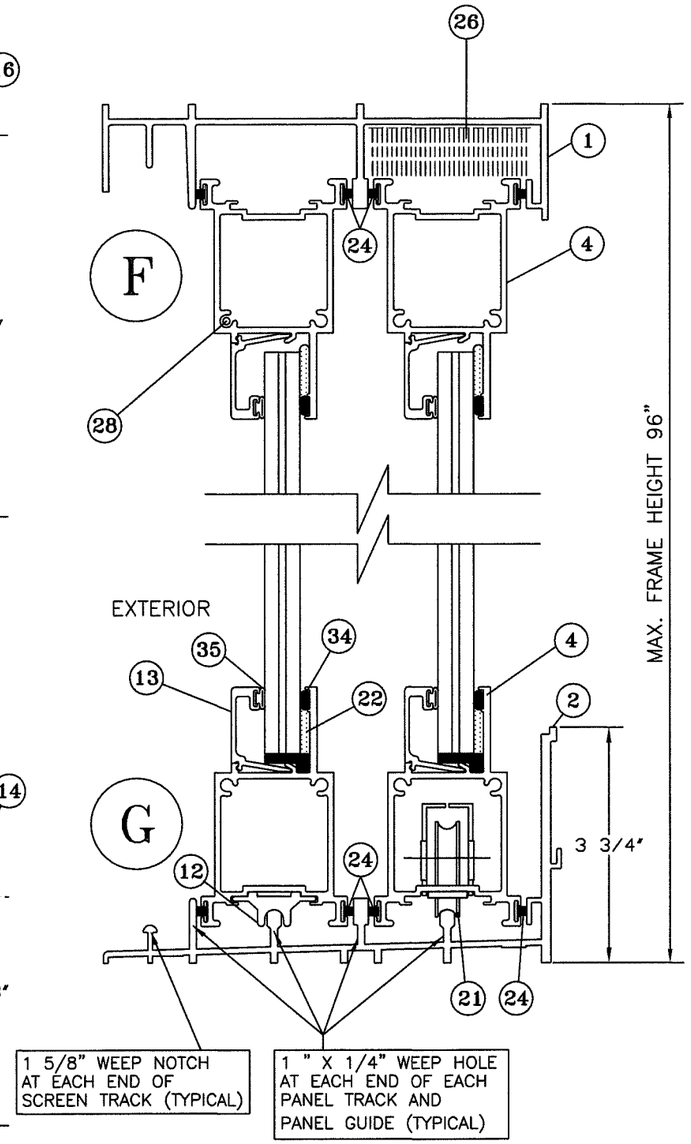


**3 3/4" SILL**

## BILL OF MATERIALS

| ITEM | PART # | QTY. | DESCRIPTION | NOTES |
|---|---|---|---|---|
| 1 | SSW-001 | 1 | FRAME HEAD | 6063-T6 ALUM |
| 2 | SSW-002 | 1 | FRAME SILL | 6063-T6 ALUM |
| 3 | SSW-003 | 2 | FRAME JAMB | 6063-T6 ALUM |
| 4 | SSW-004 | 8 | PANEL TOP & BOTTOM RAIL | 6005-T6 ALUM |
| 5 | SSW-005 | 2 | PANEL LOCK/FIXED STILE | 6005-T6 ALUM |
| 6 | SSW-006 | 2 | INTERLOCK STILE - INTERIOR | 6005-T6 ALUM |
| 7 | SSW-007 | 2 | INTERLOCK STILE - EXTERIOR | 6005-T6 ALUM |
| 8 | SSW-008 | 1 | ASTRAGAL STILE | 6005-T6 ALUM |
| 9 | SSW-009 | 1 | ASTRAGAL LOCK ADAPTER | 6005-T6 ALUM |
| 10 | SSW-010 | 1 | ASTRAGAL INTERNAL REINF. TUBE | 6005-T6 ALUM |
| 11 | SSW-011 | 1 | FIXED PANEL JAMB CLIP | 6063-T6 ALUM |
| 12 | SSW-012 | 2 | FXD. PANEL BOTTOM RAIL GUIDE | RIGID VINYL |
| 13 | SSW-013 | AS REQUIRED | GLAZING BEAD - 7/16" | 6063-T6 ALUM |
| 14 | GAS-49272 | 1 | FRAME SILL (FOR GLASS TYPE B ONLY) | 6063-T6 ALUM |
| 15 | SSW-015 | | NOT USED | |
| 16 | SSW-016 | 1 | SILL RISER | 6063-T6 ALUM |
| 17 | 08150B01 | 1 | MORTISE LOCK | DELTA INDUSTRIAL SYSTEMS |
| 18 | 3411 | 1 | MORTISE LOCK KEEPER | DELTA INDUSTRIAL SYSTEMS |
| 19 | 3182 | 1 | LOCK EXTERIOR HANDLE /PULL | DELTA INDUSTRIAL SYSTEMS |
| 20 | 3182 | 1 | LOCK INTERIOR HANDLE /PULL | DELTA INDUSTRIAL SYSTEMS |
| 21 | 2003 | 4 | TANDEM ROLLER (STAINLESS STEEL) | DELTA INDUSTRIAL SYSTEMS |
| 22 | | AS REQUIRED | SILICONE DOW CORNING 899 | |
| 23 | | AS REQUIRED | INTERLOCK WEATHERSTRIP | .229 X .220 FIN SEAL |
| 24 | | AS REQUIRED | TOP/BOT. RAIL WEATHERSTRIP | .229 X .200 FIN SEAL |
| 25 | | AS REQUIRED | FRAME JAMB WEATHERSTRIP | .229 X .220 FIN SEAL |
| 26 | | AS REQUIRED | ASTRAGAL PILE PAD | .562" x 1.500" x 2.000" |
| 27 | S.M.S. | 12 | FRAME ASSEMBLY SCREWS | #8 X 1" P.H. PHILLIPS |
| 28 | S.M.S. | 8/PANEL | PANEL ASSEMBLY SCREWS | #10 X 1" P.H. PHILLIPS |
| 29 | S.D.S. | AS REQUIRED | FXD. PANEL CLIP SCREWS | #8 X 3/8" P.H. PHILLIPS |
| 30 | S.M.S. | AS REQUIRED | ASTRAGAL ADAPTER SCREWS | #10 X 1" P.H. PHILLIPS |
| 31 | ANGLE | AS REQUIRED | FXD. PANEL RETAINING ANGLE (ALUM) | 2 1/2" X 2 1/2" X 1/8" |
| 32 | S.M.S. | AS REQUIRED | FXD. PANEL RETAINING ANGLE SCREW | #10 X 1/2" P.H. PHILLPS |
| 33 | S.M.S. | AS REQUIRED | FXD. PANEL RETAINING ANGLE SCREW | #10 X 1" P.H. PHILLPS |
| 34 | | AS REQUIRED | DOUBLE FACE FOAM GLAZING TAPE | 1/4" X 1/8" |
| 35 | | AS REQUIRED | VINYL BULB 3008 | MELTPOINT |
| 36 | | AS REQUIRED | VINYL BULB 3025 | MELTPOINT |

**FOR INSTALLATION DETAILS SEE SHEETS 14 THRU 16**

PRODUCT REVIEWED
as complying with the Florida Building Code
Acceptance No. 18-1025.05
Expiration Date 10/06/2020
By
Miami Dade Product Control

FRANCISCO HERNANDEZ
LICENSE
No. 51393
STATE OF FLORIDA
PROFESSIONAL ENGINEER
1-1-19
FRANCISCO HERNANDEZ
FLORIDA P.E. # 51393

Sunshine Windows Manufacturing, Inc.
1745 W. 33rd Place
Hialeah, Florida 33012
Ph: (305)364-9952
Fax:(305)828-5118

SERIES 2009
ALUMINUM SLIDING GLASS DOOR
IMPACT RESISTANT GLASS

| No | DATE | REVISION |
|---|---|---|
| 1 | 10/10/18 | DWG No. SGD18 SUPERSEDES DWG No. SGD09. |

DRAWING No. SGD18
DATE: 10/10/18
SCALE: 6"=1'-0"



# VERTICAL SECTIONS AND BILL OF MATERIALS

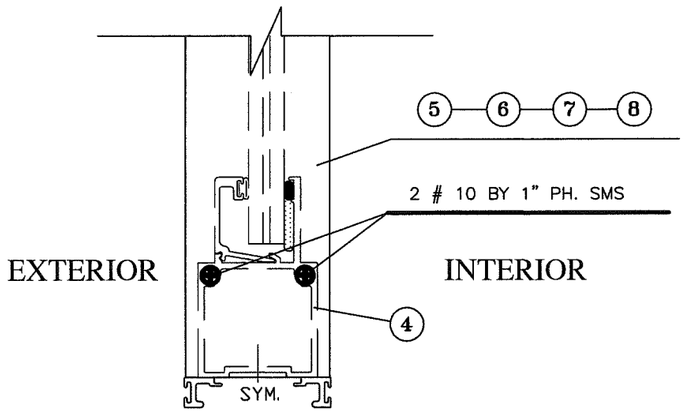


PANEL CORNERS
CONSTRUCTION DETAIL

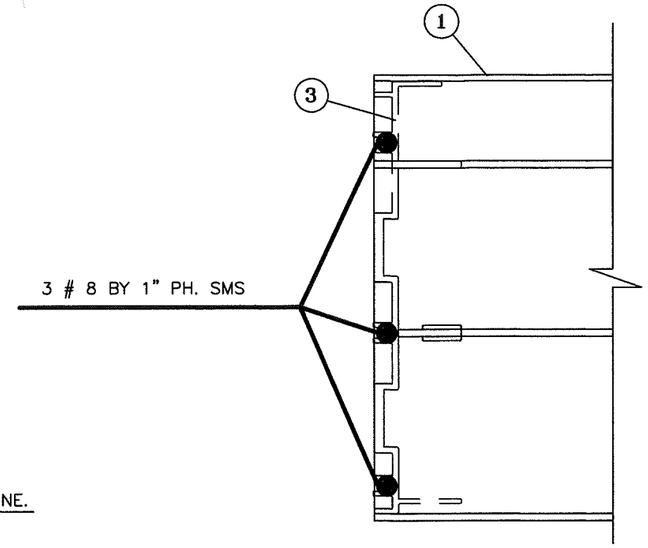


FRAME UPPER CORNER
CONSTRUCTION DETAIL

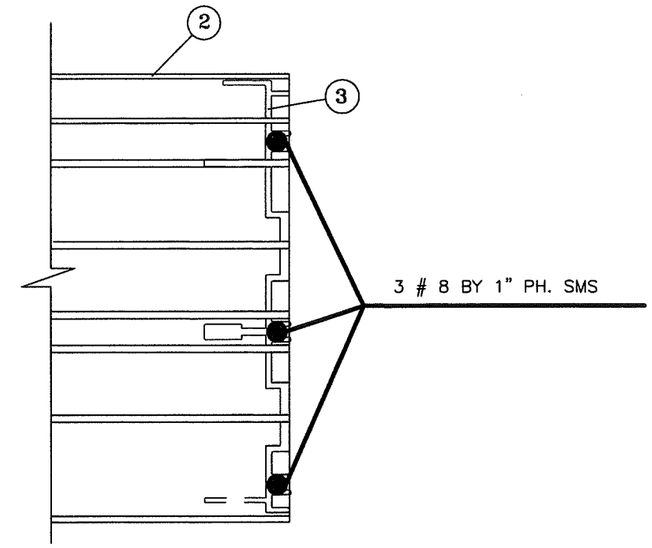


FRAME BOTTOM CORNER
CONSTRUCTION DETAIL

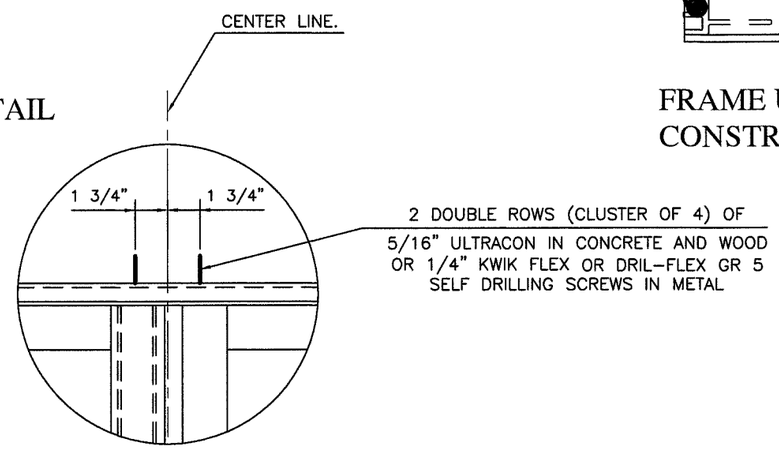


CLUSTER DETAIL (4 ANCHORS)
USE FOR HEAD AND SILL AT ASTRAGAL AND / OR INTERLOCK.
(CLUSTER VALID FOR DOORS WITH GLASS TYPE A OR TYPE B)

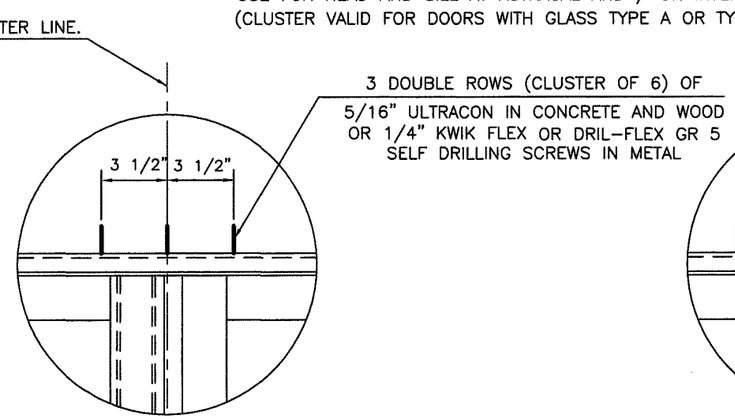


CLUSTER DETAIL (6 ANCHORS)
USE FOR HEAD AND SILL AT ASTRAGAL AND / OR INTERLOCK.
(CLUSTER VALID FOR DOORS WITH GLASS TYPE A OR TYPE B)

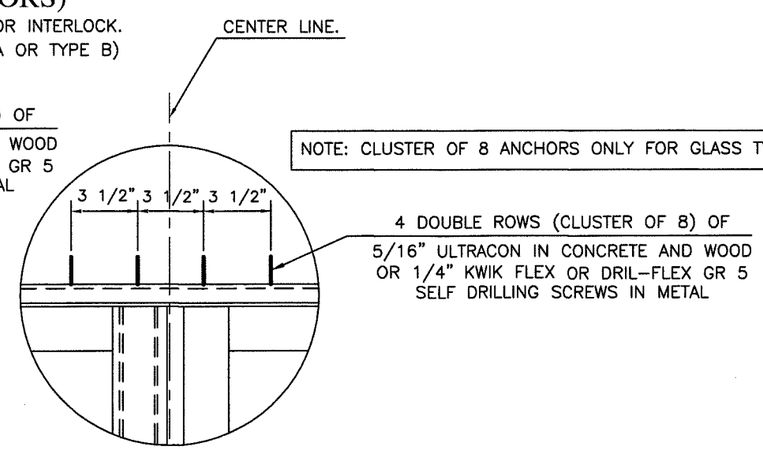


NOTE: CLUSTER OF 8 ANCHORS ONLY FOR GLASS TYPE A

CLUSTER DETAIL (8 ANCHORS)
USE FOR HEAD AND SILL AT ASTRAGAL AND / OR INTERLOCK.
(CLUSTER IS VALID ONLY FOR DOORS WITH GLASS TYPE A)

# CLUSTERS AND CORNERS DETAILS.

PRODUCT REVISED
as complying with the Florida
Building Code
Acceptance No. 18-1025.05
Expiration Date 10/06/2020
By
Miami Dade Product Control

FRANCISCO HERNANDEZ
LICENSE
No. 51393
STATE OF
FLORIDA
PROFESSIONAL ENGINEER
1-1-19
FRANCISCO HERNANDEZ
FLORIDA PE # 51393


Sunshine Windows
Manufacturing, Inc.
1745 W. 33rd Place
Hialeah, Florida 33012
Ph: (305)364-9952
Fax:(305)828-5118


SERIES 2009
ALUMINUM SLIDING GLASS DOOR
IMPACT RESISTANT GLASS

| No | DATE | REVISION |
|---|---|---|
| | 10/10/18 | DWG No. SGD18 SUPERSEDES DWG No. SGD09. |

DRAWING No.
SGD18
DATE: 10/10/18
SCALE: 6"=1'-0"

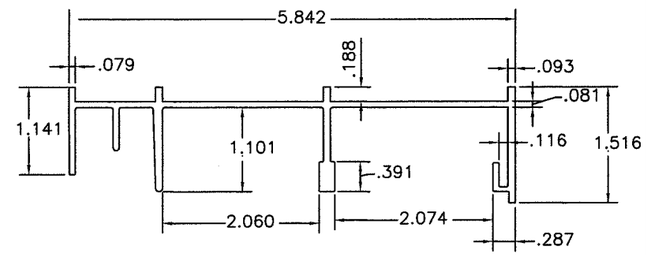


1

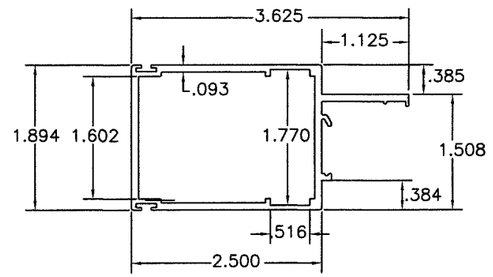


5

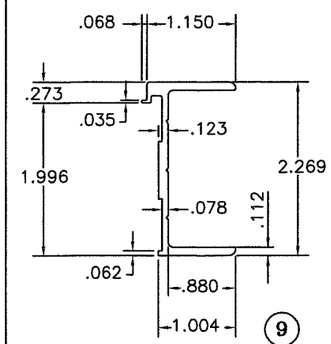


9

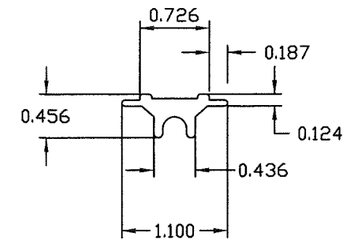


12

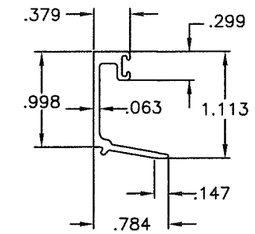


13

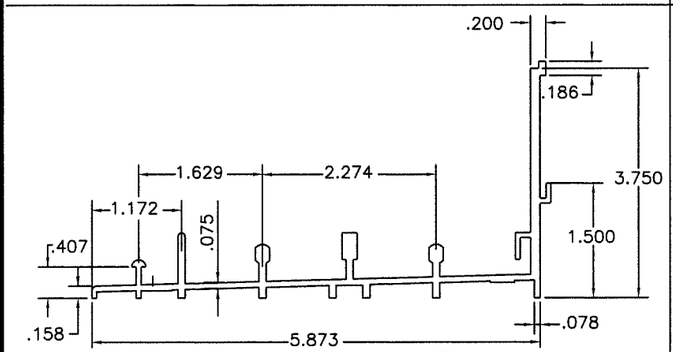


2

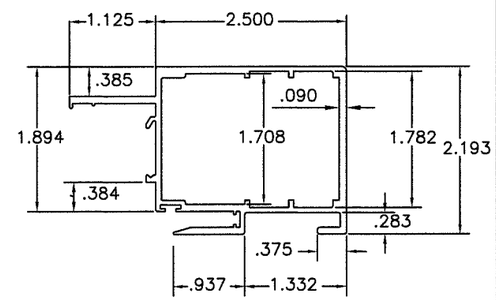


6

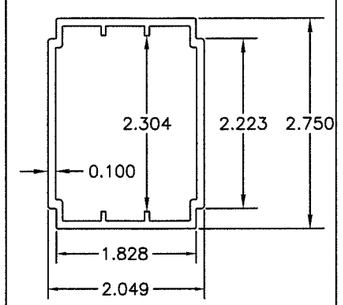


10

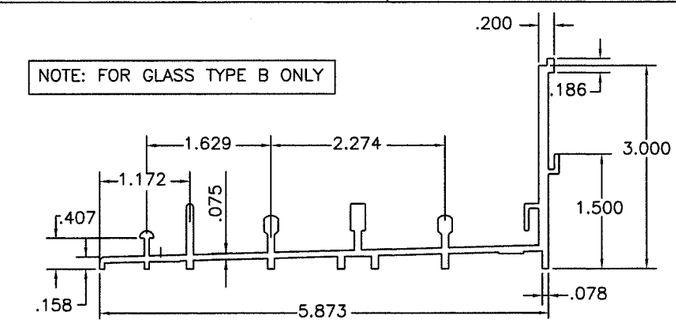


14

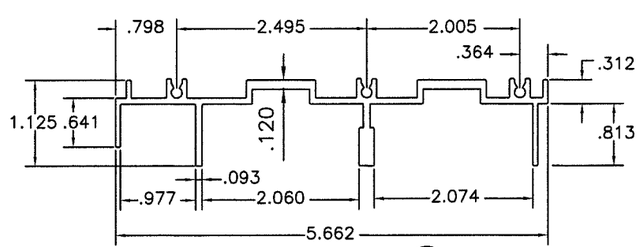


3

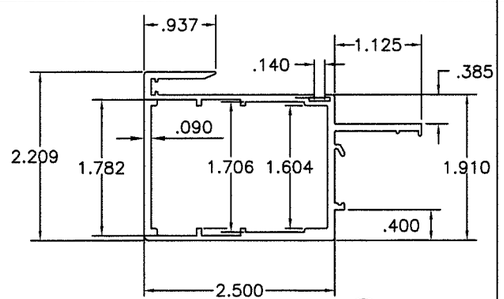


7

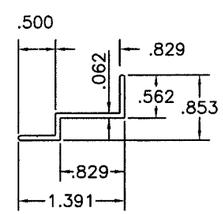


11

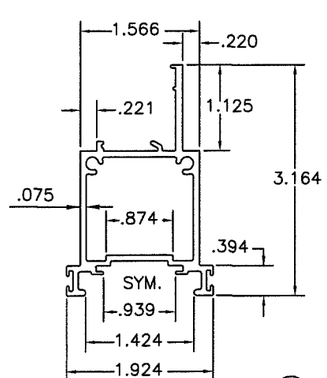


4

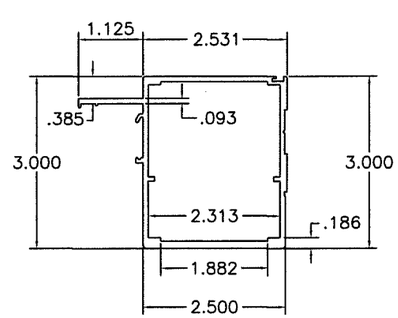


8

# EXTRUSIONS DETAILS

PRODUCT REVISED
as complying with the Florida
Building Code
Acceptance No. 18-1025.05
Expiration Date 10/06/2020
By
Miami Dade Product Control

FRANCISCO HERNANDEZ
LICENSE
No. 51393
STATE OF
FLORIDA
PROFESSIONAL ENGINEER
1-1-19
FRANCISCO HERNANDEZ
FLORIDA P.E. # 51393


Sunshine Windows
Manufacturing, Inc.
1745 W. 33rd Place
Hialeah, Florida 33012
Ph: (305)364-9952
Fax:(305)828-5118


SERIES 2009
ALUMINUM SLIDING GLASS DOOR
IMPACT RESISTANT GLASS

| No | DATE | REVISION |
|---|---|---|
| 1 | 10/10/18 | DWG No. SGD18 SUPERSEDES<br>DWG No. SGD09. |

DRAWING No.
SGD18
DATE: 10/10/18
SCALE: 6"=1'-0"

SHEET 13 OF 16

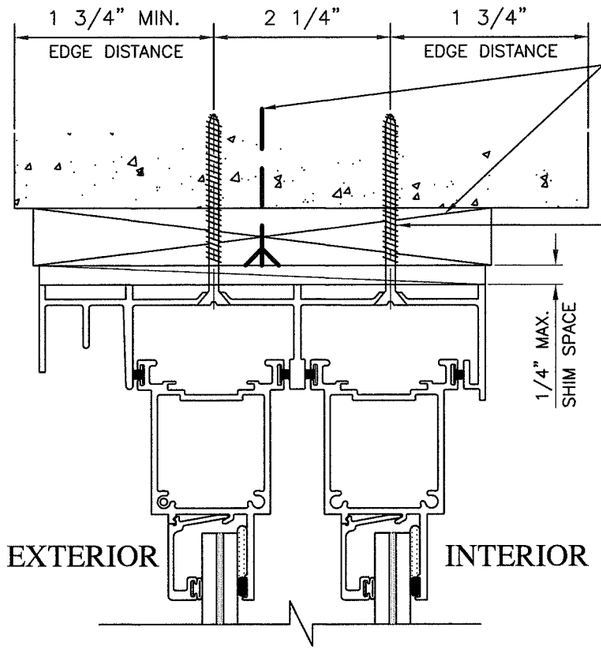


1" X WOOD BUCK (BY OTHERS) MUST BE PROPERLY SEALED AND ANCHORED TO TRANSFER LOADS TO THE STRUCTURE AND APPROVED BY BUILDING OFFICIAL PRIOR TO DOOR INSTALLATION.

5/16" ø ULTRACON WITH 1 3/4" MIN. EMBEDMENT INTO CONCRETE THROUGH 1" X WOOD BUCK.
FOR MAX. ANCHOR SPACING REFER TO TYPICAL ELEVATIONS ON SHEET 3 OF 16 FOR GLASS TYPE A OR SHEET 4 OF 16 FOR GLASS TYPE B AND CLUSTERS DETAILS ON SHEET 12 OF 16.

ATTACHMENT TO CONCRETE USING 1" BY WOOD BUCK

**NOTE:**
ATTACHMENT REPRESENTATIONS ARE VALID FOR GLASS TYPE A AND GLASS TYPE B.

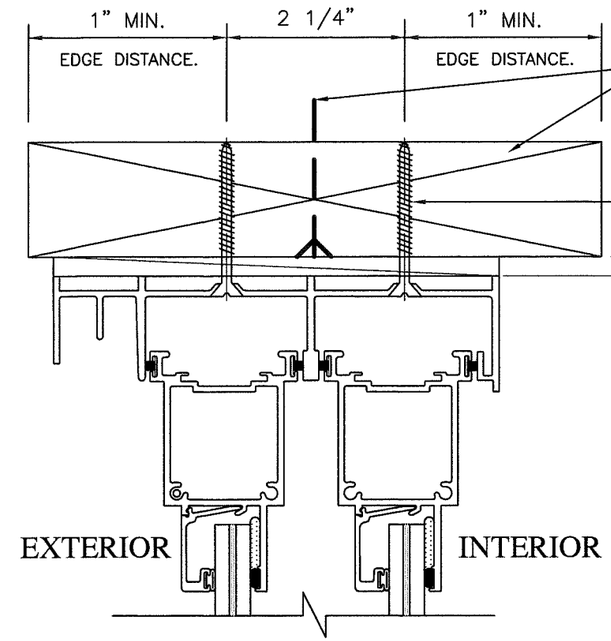


WOODEN STRUCTURE OR 2" X WOOD BUCK (BY OTHERS). MUST BE PROPERLY ATTACHED TO TRANSFER GLAZING SYSTEM LOADS TO THE STRUCTURE AND APPROVED BY BUILDING OFFICIAL PRIOR TO DOOR INSTALLATION.

5/16" ø ULTRACON WITH 1 7/8" MIN. PENETRATION INTO WOOD.
FOR MAX. ANCHOR SPACING REFER TO TYPICAL ELEVATIONS ON SHEET 3 OF 16 FOR GLASS TYPE A OR SHEET 4 OF 16 FOR GLASS TYPE B AND CLUSTERS DETAILS ON SHEET 12 OF 16.

ATTACHMENT TO WOOD

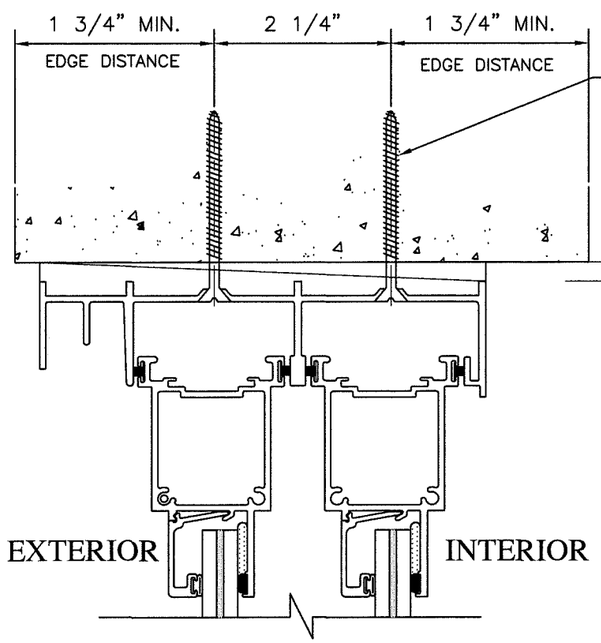


5/16" ø ULTRACON WITH 1 3/4" MIN. EMBEDMENT INTO CONCRETE.
FOR MAX. ANCHOR SPACING REFER TO TYPICAL ELEVATIONS ON SHEET 3 OF 16 FOR GLASS TYPE A OR SHEET 4 OF 16 FOR GLASS TYPE B AND CLUSTERS DETAILS ON SHEET 12 OF 16.

ATTACHMENT TO CONCRETE WITHOUT WOOD BUCKS

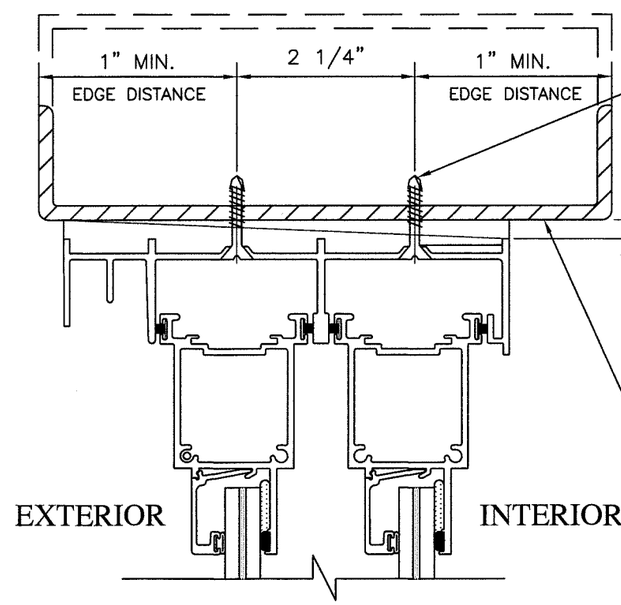


1/4" ø KWIK-FLEX OR DRIL-FLEX GR 5 SELF DRILLING SCREWS THROUGH METAL WITH MIN. 3 THREADS BEYOND THE SUBSTRATE.
FOR MAX. ANCHOR SPACING REFER TO TYPICAL ELEVATIONS ON SHEET 3 OF 16 FOR GLASS TYPE A OR SHEET 4 OF 16 FOR GLASS TYPE B AND CLUSTERS DETAILS ON SHEET 12 OF 16

MIAMI-DADE COUNTY APPROVED MULLION WITH 1/8" MIN. THICKNESS (UNDER SEPARATE NOA) OR METAL STRUCTURE WITH 1/8" MIN. THICKNESS BY OTHERS. MINIMUM ALUMINUM ALLOY 6063-T6 OR A-36 STEEL. SHALL BE APPROVED BY BUILDING OFFICIAL PRIOR TO DOOR INSTALLATION.

ATTACHMENT TO METAL STRUCTURE

# TYPICAL SECTIONS AT HEAD ATTACHMENT TO DIFFERENT SUBSTRATES.

PRODUCT REVIEWED as complying with the Florida Building Code
Acceptance No. 18-1025.05
Expiration Date 10/06/2020
By
Miami Dade Product Control

FRANCISCO HERNANDEZ LICENSE No. 51393 STATE OF FLORIDA PROFESSIONAL ENGINEER
1-1-19
FRANCISCO HERNANDEZ
FLORIDA P.E. # 51393

Sunshine Windows Manufacturing, Inc.
1745 W. 33rd Place
Hialeah, Florida 33012
Ph: (305)364-9952
Fax:(305)828-5118

SERIES 2009
ALUMINUM SLIDING GLASS DOOR
IMPACT RESISTANT GLASS

| No | DATE | REVISION |
|---|---|---|
| 1 | 10/10/18 | DWG No. SGD18 SUPERSEDES DWG No. SGD09. |

DRAWING No. SGD18
DATE: 10/10/18
SCALE: 6"=1'-0"

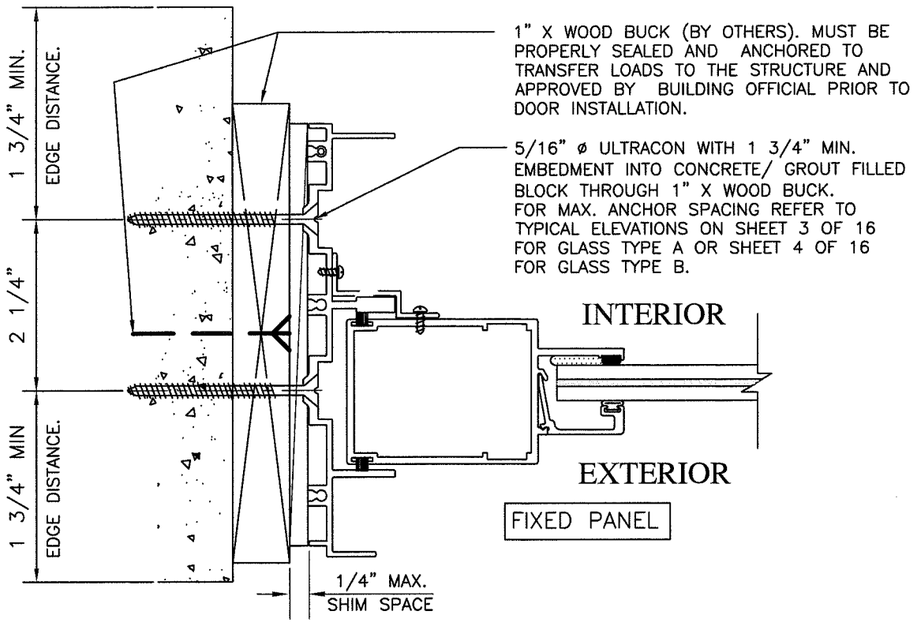


ATTACHMENT TO CONCRETE OR GROUT FILLED BLOCK
USING 1" BY WOOD BUCK

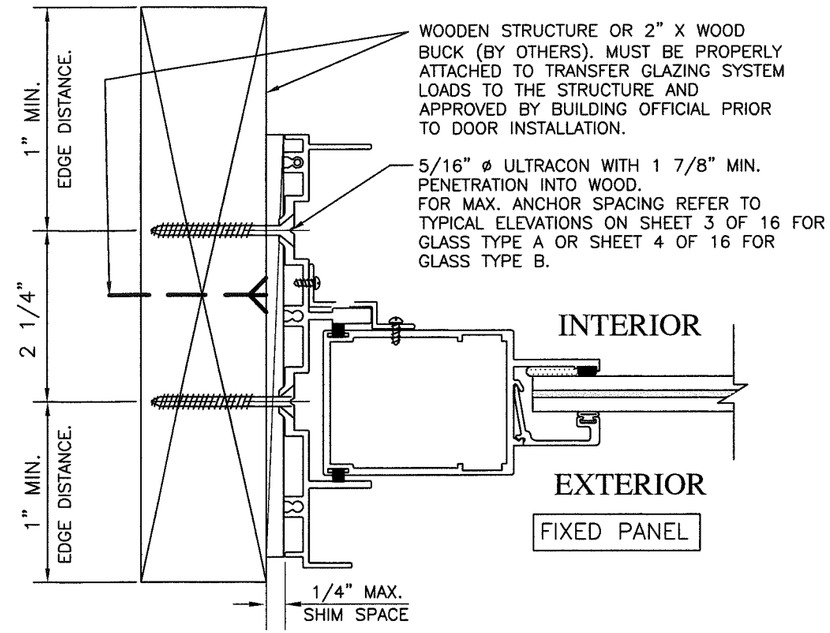


ATTACHMENT TO WOOD

**NOTE:**
ATTACHMENT REPRESENTATIONS ARE VALID FOR GLASS TYPE A AND GLASS TYPE B.

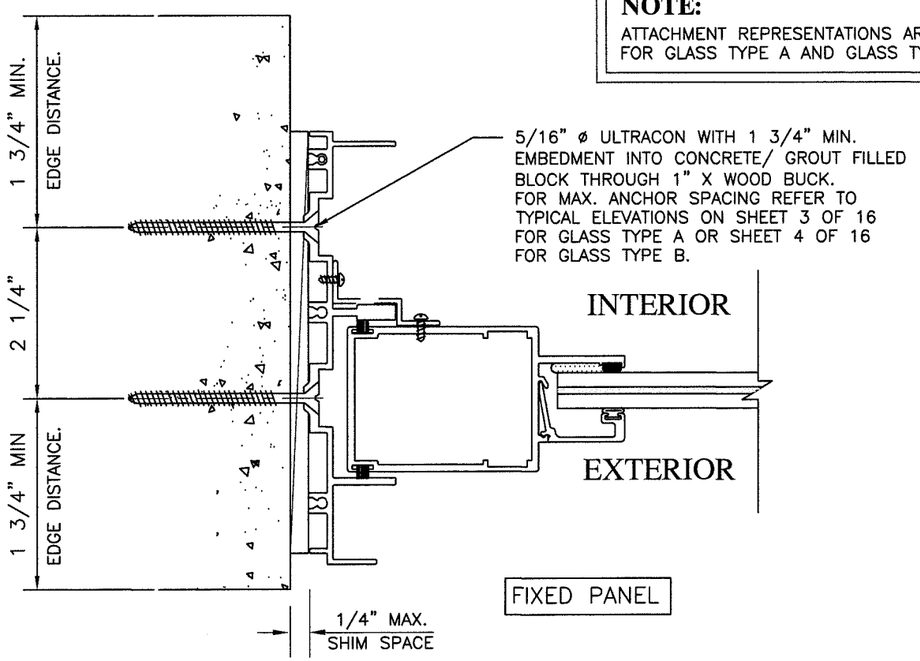


ATTACHMENT TO CONCRETE OR GROUT FILLED BLOCK
WITHOUT WOOD BUCKS

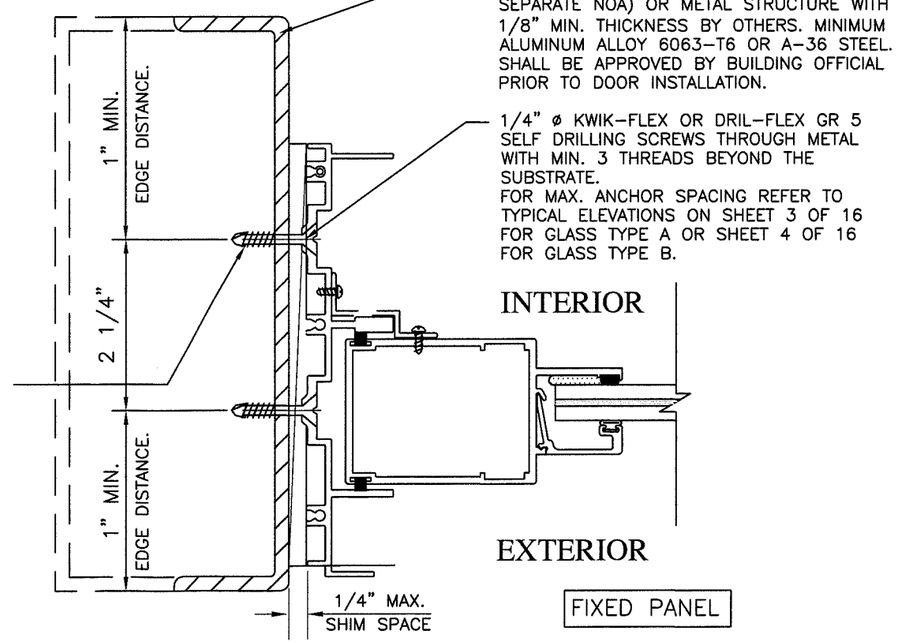


ATTACHMENT TO METAL STRUCTURE

# TYPICAL SECTIONS AT JAMBS
# ATTACHMENT TO DIFFERENT SUBSTRATES.

PRODUCT REVISED
as complying with the Florida Building Code
Acceptance No. 18-1026.05
Expiration Date 10/06/2020
By
Miami Dade Product Control

FRANCISCO HERNANDEZ
LICENSE
No. 51393
STATE OF FLORIDA
PROFESSIONAL ENGINEER
1-1-19
FRANCISCO HERNANDEZ
FLORIDA P.E. # 51393


Sunshine Windows Manufacturing, Inc.
1745 W. 33rd Place
Hialeah, Florida 33012
Ph: (305)364-9952
Fax:(305)828-5118


SERIES 2009
ALUMINUM SLIDING GLASS DOOR
IMPACT RESISTANT GLASS

| No | DATE | REVISION |
|---|---|---|
| 1 | 10/10/18 | DWG No. SGD18 SUPERSEDES DWG No. SGD09. |

DRAWING No.
SGD18
DATE: 10/10/18
SCALE: 6"=1'-0"
SHEET 15 OF 16

NOTE: 3 3/4" AND 5" HIGH SILL ONLY FOR DOORS WITH GLASS TYPE A

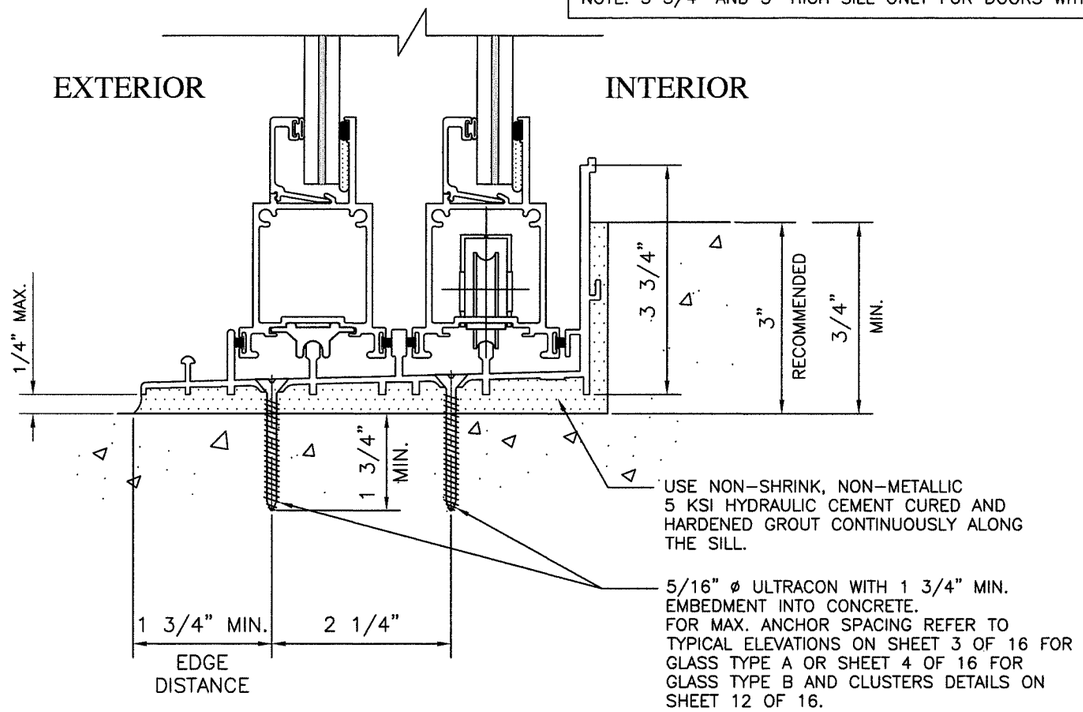


3 3/4" HIGH SILL

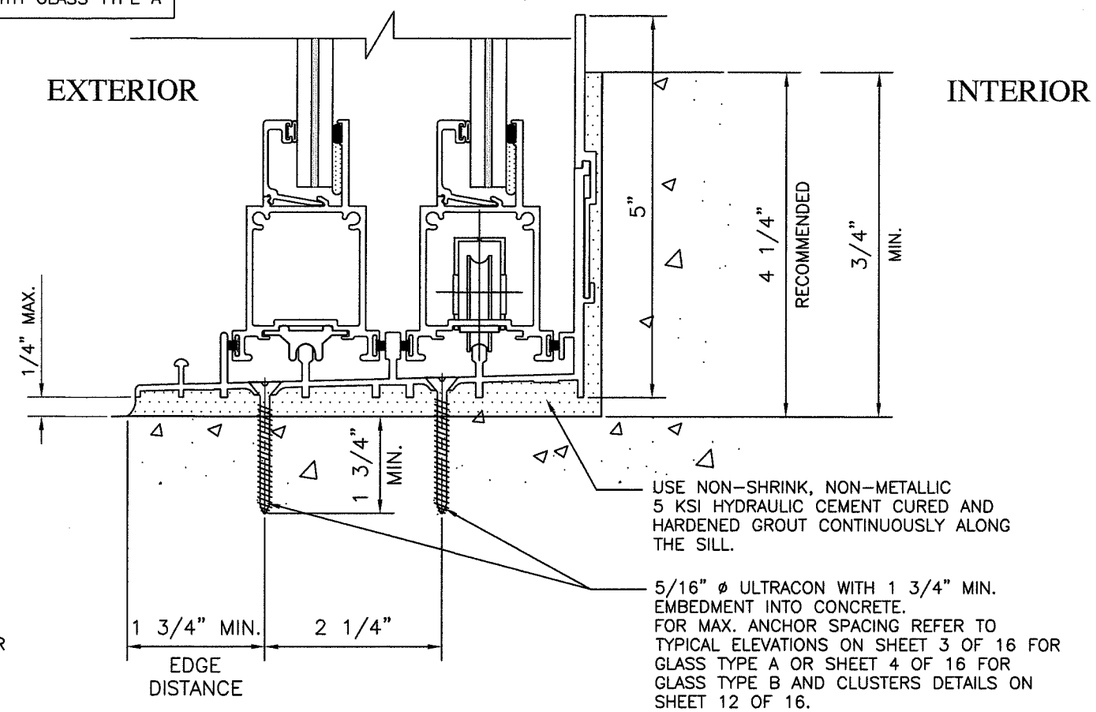


5" HIGH SILL

**NOTE:**
ATTACHMENT REPRESENTATIONS ARE VALID FOR GLASS TYPE A AND GLASS TYPE B.

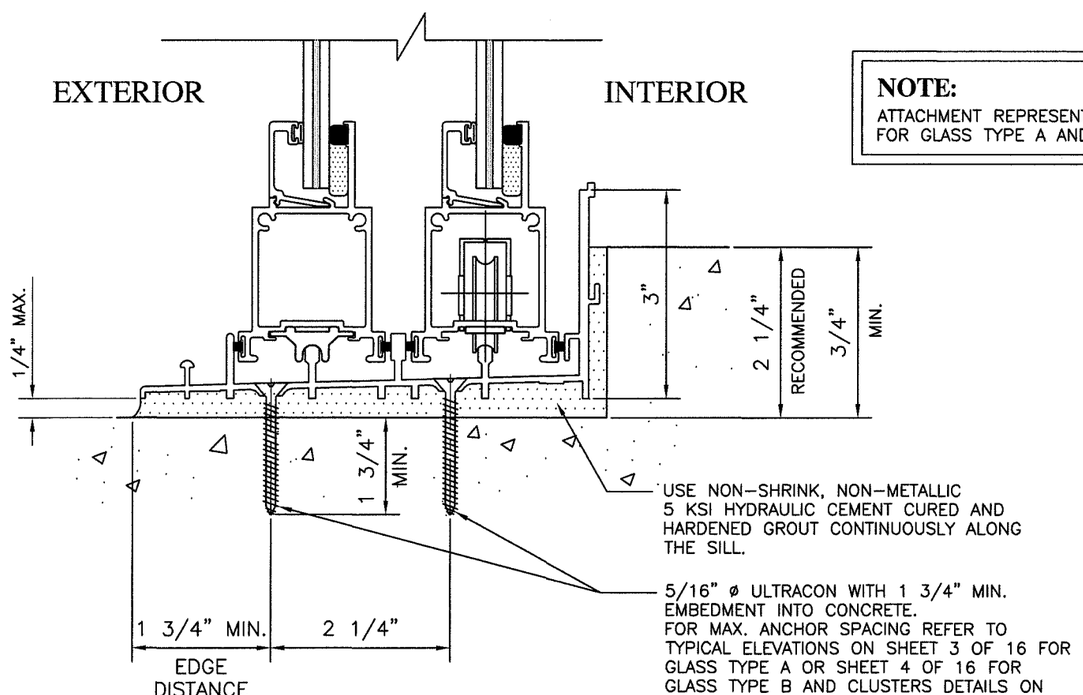


3" HIGH SILL

NOTE: 3" HIGH SILL ONLY FOR DOORS WITH GLASS TYPE B

# TYPICAL SECTIONS AT SILL

PRODUCT REVISED
as complying with the Florida Building Code
Acceptance No. 18-1025.05
Expiration Date 10/06/2020
By
Miami Dade Product Control

FRANCISCO HERNANDEZ
LICENSE
No. 51393
STATE OF FLORIDA
PROFESSIONAL ENGINEER
1-1-19
FRANCISCO HERNANDEZ
FLORIDA PE # 51393


Sunshine Windows Manufacturing, Inc.
1745 W. 33rd Place
Hialeah, Florida 33012
Ph: (305)364-9952
Fax:(305)828-5118


SERIES 2009
ALUMINUM SLIDING GLASS DOOR
IMPACT RESISTANT GLASS

| No | DATE | REVISION |
|---|---|---|
| 1 | 10/10/18 | DWG. No. SGD18 SUPERSEDES DWG. No. SGD09. |

DRAWING No.
SGD18
DATE: 10/10/18
SCALE: 6"=1'-0"