MIAMI-DADE COUNTY
DEPARTMENT OF REGULATORY AND ECONOMIC RESOURCES (RER)
BOARD AND CODE ADMINISTRATION DIVISION

MIAMI-DADE COUNTY
PRODUCT CONTROL SECTION
11805 SW 26 Street, Room 208
Miami, Florida 33175-2474
T (786) 315-2590 F (786) 315-2599
www.miamidade.gov/economy

NOTICE OF ACCEPTANCE (NOA)

CGI WINDOWS and DOORS, INC.
3780 W. 103rd Street
Hialeah, FL 33018

SCOPE:

This NOA is being issued under the applicable rules and regulations governing the use of construction materials. The documentation submitted has been reviewed and accepted by Miami-Dade County RER -Product Control Section to be used in Miami Dade County and other areas where allowed by the Authority Having Jurisdiction (AHJ).

This NOA shall not be valid after the expiration date stated below. The Miami-Dade County Product Control Section (In Miami Dade County) and/or the AHJ (in areas other than Miami Dade County) reserve the right to have this product or material tested for quality assurance purposes. If this product or material fails to perform in the accepted manner, the manufacturer will incur the expense of such testing and the AHJ may immediately revoke, modify, or suspend the use of such product or material within their jurisdiction. RER reserves the right to revoke this acceptance, if it is determined by Miami-Dade County Product Control Section that this product or material fails to meet the requirements of the applicable building code.

This product is approved as described herein, and has been designed to comply with the Florida Building Code, including the High Velocity Hurricane Zone.

DESCRIPTION: Series "560" Aluminum Sliding Glass Door (3-tracks) w/ wo Reinforcements – L.M.I.

APPROVAL DOCUMENT: Drawing No. **W09-58 Rev H**, titled Series "560 Aluminum Sliding Glass Door (LMI)", sheets 1 through 13 (inclusive 2.1, 3.1 and 9.1) of 13, prepared by Al–Farooq Corporation, dated 11/10/09 and last revised on AUG 22, 2019, signed and sealed by Javad Ahmad, P. E., bearing the Miami–Dade County Product Control Revision stamp with the Notice of Acceptance number and Revision date by the Miami–Dade County Product Control Section.

MISSILE IMPACT RATING: Large and Small Missile Impact Resistant

Limitations:

1. Pocket wall is not part of this approval and to be reviewed by AHJ.
2. See Design Pressure (DP) table: Sizes Vs glass types and Interlock/lock reinforcing in sheets **3** & **3.1**. See Exterior Positive DP Vs sill w/ sill Riser rating on sheet 4. See Head/sill anchor types, clusters, shim space Vs DP capacity in sheets **5**, **6** & **7** and Jamb/ pocket Jamb anchor spacing on sheet **1**. See Pocket Jamb anchor capacity on sheet **9.1** Lower capacity from the charts shall controls for the entire assembly.
3. See allowable Max. Frame area (ft^2) & configurations for Non-pocketed Doors & Pocketed Doors in sheets **2** & **3**.

LABELING: Each unit shall bear a permanent label with the manufacturer's name or logo, city, state and series and following statement: "Miami-Dade County Product Control Approved", noted herein.

RENEWAL of this NOA shall be considered after a renewal application has been filed and there has been no change in the applicable building code negatively affecting the performance of this product.

TERMINATION of this NOA will occur after the expiration date or if there has been a revision or change in the materials, use, and/or manufacture of the product or process. Misuse of this NOA as an endorsement of any product, for sales, advertising or any other purposes shall automatically terminate this NOA. Failure to comply with any section of this NOA shall be cause for termination and removal of NOA.

ADVERTISEMENT: The NOA number preceded by the words Miami-Dade County, Florida, and followed by the expiration date may be displayed in advertising literature. If any portion of the NOA is displayed, then it shall be done in its entirety.

INSPECTION: A copy of this entire NOA shall be provided to the user by the manufacturer or its distributors and shall be available for inspection at the job site at the request of the Building Official.

This NOA **revises NOA # 17-1226.01** and consists of this page 1 and evidence pages E-1, E-2 & E-3, as well as approval document mentioned above.

The submitted documentation was reviewed by **Ishaq I. Chanda, P.E.**

MIAMI-DADE COUNTY APPROVED

9/23/19

CGI WINDOWS and DOORS, INC.

NOTICE OF ACCEPTANCE: EVIDENCE SUBMITTED

1. Evidence submitted under previous approvals

A. DRAWINGS

1. Manufacturer's die drawings and sections.
2. Drawing No. **W09-58**, titled "Series 560 Alum Sliding Glass Door – LMI", sheets 1 through 13 of 13, including sheets 2.1 and 9.1, dated 11/10/09, prepared by Al–Farooq Corporation, with latest revision "D" dated 12/23/15, signed and sealed by Javad Ahmad, P. E.

B. TESTS (Submitted under **#09-1209.07/#08–0304.05)**

1. Test reports on:
   1) Air Infiltration Test, per FBC, TAS 202–94
   2) Uniform Static Air Pressure Test, Loading per FBC TAS 202–94
   3) Water Resistance Test, per FBC, TAS 202–94
   4) Large Missile Impact Test per FBC, TAS 201–94
   5) Cyclic Wind Pressure Loading per FBC, TAS 203–94
   6) Forced Entry Test, per FBC, TAS 202–94

Along with marked–up drawings and installation diagram of an aluminum SGD, prepared by Hurricane Test Laboratory, Inc., Test Report No. **HTL–*0080–0707–09***, dated 11/10/09, signed and sealed by Vinu J. Abraham, P.E.

Along with manufacturer's parts and section drawing marked-up drawings of aluminum SGD, by Hurricane Engineering Testing, Inc., Test Report No. **HETI-07-4405, 07-4416, 07-4418, 07-4424, 07-4425, 07-4425** and **07-4427,** dated 12/27/07 thru 01/31/08, signed and sealed by Candido Font, P.E.(Note: Test report No(s) **HETI-07-4405** and **07-4416** have been revised and reissued on April 08, 2008 by Hurricane Engineering Testing, Inc, signed and sealed by Candido Font, P.E.).

C. CALCULATIONS (Submitted under **NOA *#15-0413.05*)**

1. Anchor verification calculations and structural analysis, complying with **FBC-2014, 5th edition**, dated 03/20/15 & 12/09/15, prepared by Al Farooq Corporation, signed and sealed by Javad Ahmad, P.E.
2. Glazing complies with ASTM E1300-02 & -04.

D. QUALITY ASSURANCE

1. Miami Dade Department of Regulatory and Economic Resources (RER).

E. MATERIAL CERTIFICATIONS

1. Notice of Acceptance No. **14-0423.15** issued to Eastman Chemical Company (MA) for their **"Saflex CP- Saflex and Saflex HP Composite Glass Interlayers with PET Core"** dated 06/19/2014, expiring on 12/11/2018.
2. Notice of Acceptance No. **14–0916.11** issued to Kuraray America, Inc. for their **"SentryGlas (Clear and White) Glass Interlayers"** dated 06/25/2015, expiring on 07/04/2018.

F. STATEMENTS

1. Statement letter of no financial interest, conformance and compliance with the **FBC–2014, 5th edition**, dated 03/20/15, signed and sealed by Javad Ahmad, P. E.
2. Statement letter of lab compliance, part of the above test reports.
3. One year extension request letter issued by CGI Windows and Doors, Inc., dated 05/30/17, signed by Robert Beaird, P.E.

G. OTHER

1. This NOA **revises #15-0413.05,** expiring 06/12/2017.
2. Test proposal # **07-3001-R** dated 10-23-07, approved by BCCO and Test Proposal No. **16-1527** dated 12/22/16, approved by RER.

Ishaq I. Chanda

Ishaq I. Chanda, P.E.
Product Control Unit Supervisor
NOA No. 18-1108.05
Expiration Date: June 12, 2023
Approval Date: August 29 , 2019

NOTICE OF ACCEPTANCE: EVIDENCE SUBMITTED

2. Previous Evidence submitted.

A. DRAWINGS

1. Drawing No. **W09-58**, titled "Series 560 Alum Sliding Glass Door – LMI", sheets 1 through 13 of 13, including sheets 2.1, 3.1, 6.1 and 9.1, dated 11/10/09, prepared by Al–Farooq Corporation, with latest revision "G" dated 04/24/18, signed and sealed by Javad Ahmad, P. E.

B. TESTS (submitted under # **17-1226.01**)

1. Test reports on:
   1) Air Infiltration Test, per FBC, TAS 202–94
   2) Uniform Static Air Pressure Test, Loading per FBC TAS 202–94
   3) Water Resistance Test, per FBC, TAS 202–94
   4) Small Missile Impact Test per FBC, TAS 201–94
   5) Large Missile Impact Test per FBC, TAS 201–94
   6) Cyclic Wind Pressure Loading per FBC, TAS 203–94
   7) Forced Entry Test, per FBC, TAS 202–94

along with marked–up drawings and installation diagram of an aluminum SGD, prepared by Fenestration Testing Laboratory, Inc., Test Report No. **FTL-9547**, dated 06/19/17, signed and sealed by Idalmis Ortega, P. E.

C. CALCULATIONS (Submitted under previous NOA No. 17-1226.01)

1. Anchor verification calculations and structural analysis, complying with **FBC-2017, 6th edition**, dated 12/11/17, prepared by Al Farooq Corporation, signed and sealed by Javad Ahmad, P.E.
2. Glazing complies with ASTM E1300-09.

D. QUALITY ASSURANCE

1. Miami Dade Department of Regulatory and Economic Resources (RER).

E. MATERIAL CERTIFICATIONS

1. Notice of Acceptance No. **14-0423.15** issued to Eastman Chemical Company (MA). for their **"Saflex CP- Saflex and Saflex HP Composite Glass Interlayers with PET Core"** dated 06/19/2014, expiring on 12/11/2018.
2. Notice of Acceptance No. **17-0808.02** issued to Kuraray America, Inc. for their **"SentryGlas (Clear and White) Glass Interlayers"** dated 12/28/17, expiring on 07/04/2023.

F. STATEMENTS

1. Statement letter of no financial interest, conformance and compliance with the **FBC-2017, 6th edition**, dated 11/15/17, signed and sealed by Javad Ahmad, P. E.

G. OTHER

1. This NOA **revises and renews** NOA # **17-0307.07**, expiring on 06/12/23.

3. New Evidence submitted.

A. DRAWINGS

1. Drawing No. **W09-58 Rev H**, titled Series "560 Aluminum Sliding Glass Door (LMI)", sheets 1 through 13 (inclusive 2.1, 3.1 and 9.1) of 13, prepared by Al–Farooq Corporation, dated 11/10/09 and last revised on AUG 22, 2019, signed and sealed by Javad Ahmad, P. E.

Ishaq I. Chanda

Ishaq I. Chanda, P.E.
Product Control Unit Supervisor
NOA No. 18-1108.05
Expiration Date: June 12, 2023
Approval Date: August 29 , 2019

NOTICE OF ACCEPTANCE: EVIDENCE SUBMITTED

B. TESTS

1. REF Test reports on: 1) Uniform Static Air Pressure Test, Loading per FBC TAS 202–94
   2) Large Missile Impact Test per FBC, TAS 201–94
   3) Cyclic Wind Pressure Loading per FBC, TAS 203–94

along with marked–up drawings of an aluminum SGD, prepared by Fenestration Testing Laboratory, Inc., Test Report No. **FTL 19-936**, dated 04/15/19, signed and sealed by Idalmis Ortega, P. E.

2. Test reports on: 1) Air Infiltration Test, per FBC, TAS 202–94
   2) Water Resistance Test, per FBC, TAS 202–94
   3) Uniform Static Air Pressure Test, Loading per FBC TAS 202–94
   4) Large Missile Impact Test per FBC, TAS 201–94
   5) Cyclic Wind Pressure Loading per FBC, TAS 203–94
   6) Forced Entry Test, per FBC, TAS 202–94

along with marked–up drawings and installation diagram of an aluminum 3-Tracks (6-panels) Alum SGD W/pockets, prepared by Fenestration Testing Lab, Inc., Test Reports No. **FTL–9547** dated 07/05/17, signed and sealed by Idalmis Ortega, P.E.

along with marked–up drawings and installation diagram of an aluminum 3-Tracks (6-panels) Alum SGD W/pockets, prepared by HTL, Inc., Test Reports No. **HTL–0080-0707–09** dated 11/10/14, signed and sealed by Vinu J. Abraham, P.E

C. CALCULATIONS (submitted under #**17-1226.01**)

1. Supplement anchor verification calculation for wider panel, prepared by Al-Farooq Corp. dated 05/29/19, signed and sealed by Javad Ahmad, P.E.

D. QUALITY ASSURANCE

1. Miami Dade Department of Regulatory and Economic Resources (RER).

E. MATERIAL CERTIFICATIONS

1. Notice of Acceptance No. **18-0301.06** issued to Eastman Chemical Company (MA) (former Solutia, Inc.) for their **"Saflex CP- Saflex and Saflex HP Composite Glass Interlayers with PET Core"**, expiring on 12/11/2023.
2. Notice of Acceptance No. **17-0808.02** issued to Kuraray America, Inc. (former E.I. DuPont DE Nemours & Co., Inc.) for their **"SentryGlas (Clear and White) Glass Interlayers"**, expiring on 07/04/2023.

F. STATEMENTS

1. Statement letter of conformance to **FBC 6th Edition (2017)**, and of no financial interest, dated 08/22/19, prepared by Al Farooq Corporation, signed and sealed by Javad Ahmad, P.E.
2. Statement letter of lab compliance, part of the above test report.

G. OTHER

1. This NOA **revises NOA # 17-1226.01**, expiring 06/12/2023.
2. Test proposal # **19-0219** dated March 13, 2019 approved by RER.

Ishaq I. Chanda

Ishaq I. Chanda, P.E.
Product Control Unit Supervisor
NOA No. 18-1108.05
Expiration Date: June 12, 2023
Approval Date: August 29 , 2019

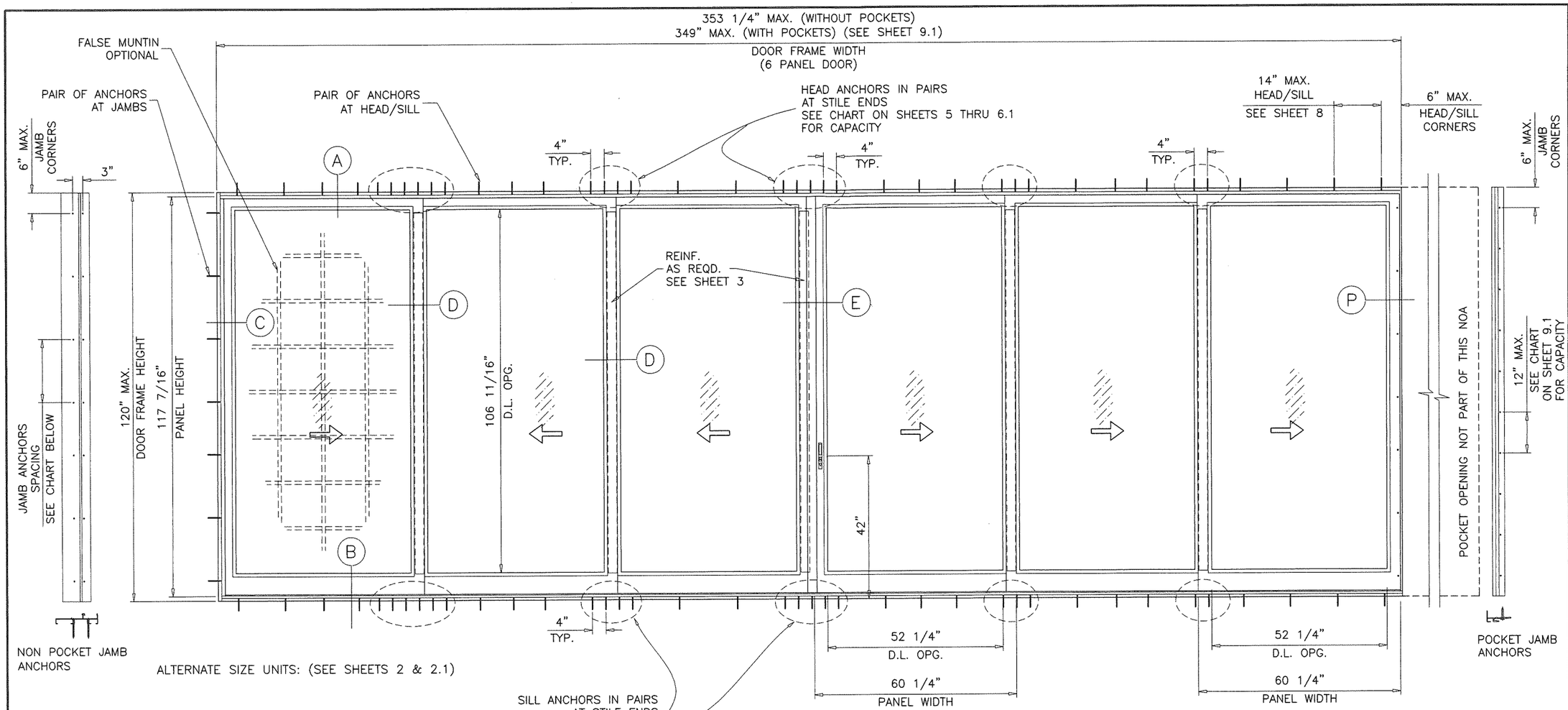

SERIES 560 ALUM SLIDING GLASS DOOR (3 TRACK)

DESIGN LOAD RATING FOR DOORS TO BE AS PER CHARTS SHOWN ON SHEET 3.
APPLICABLE EGRESS REQUIREMENTS PER FBC TO BE REVIEWED BY BUILDING OFFICIAL.

THIS PRODUCT HAS BEEN DESIGNED AND TESTED TO COMPLY WITH THE REQUIREMENTS OF THE 2017 (6TH EDITION) FLORIDA BUILDING CODE INCLUDING HIGH VELOCITY HURRICANE ZONE (HVHZ).

1BY OR 2BY WOOD BUCKS & BUCK FASTENERS BY OTHERS, MUST BE DESIGNED AND INSTALLED ADEQUATELY TO TRANSFER APPLIED PRODUCT LOADS TO THE BUILDING STRUCTURE.

ANCHORS SHALL BE CORROSION RESISTANT, SPACED AS SHOWN ON DETAILS AND INSTALLED PER MANUF'S INSTRUCTIONS. SPECIFIED EMBEDMENT TO BASE MATERIAL SHALL BE BEYOND WALL DRESSING OR STUCCO.

A LOAD DURATION INCREASE IS USED IN DESIGN OF ANCHORS INTO WOOD ONLY.

ALL SHIMS TO BE HIGH IMPACT, NON-METALLIC AND NON-COMPRESSIBLE.

MATERIALS INCLUDING BUT NOT LIMITED TO STEEL/METAL SCREWS, THAT COME INTO CONTACT WITH OTHER DISSIMILAR MATERIALS SHALL MEET THE REQUIREMENTS OF THE 2017 FLORIDA BLDG. CODE & ADOPTED STANDARDS.

THIS PRODUCT APPROVAL IS GENERIC AND DOES NOT PROVIDE INFORMATION FOR A SITE SPECIFIC PROJECT, i.e. LIFE SAFETY OF THIS PRODUCT, ADEQUACY OF STRUCTURE RECEIVING THIS PRODUCT AND SEALING AROUND OPENING FOR WATER INFILTRATION RESISTANCE ETC.
CONDITIONS NOT SHOWN IN THIS DRAWING ARE TO BE ANALYZED SEPARATELY, AND TO BE REVIEWED BY BUILDING OFFICIAL.

TYPICAL ELEVATION

MAX. JAMB ANCHOR SPACINGS (NON-POCKET)				
	ANCHOR TYPE			
SHIM SPACE	'A' & 'B'	'C'	'D' & 'E'	'AA' & 'BB'
1/4"	18-1/2"	18-1/2"	18-1/2"	18-1/2"
3/8"	18-1/2"	–	18-1/2"	18-1/2"
1/2"	9-1/4"	–	9-1/4"	18-1/2"

D.L. OPENING
D.L.O HEIGHT = DOOR HEIGHT – 13 5/16"
D.L.O. WIDTH = PANEL WIDTH – 8"

THESE DOORS ARE RATED FOR LARGE & SMALL MISSILE IMPACT. SHUTTERS ARE NOT REQUIRED.

3 TRACK DOORS

LAMINATED GLASS AND
LAMINATED INSULATING GLASS
LARGE/SMALL MISSILE IMPACT

INSTRUCTIONS:

USE CHARTS AS FOLLOWS.

STEP 1 DETERMINE DESIGN WIND LOAD REQUIREMENT BASED ON WIND VELOCITY, BLDG. HEIGHT, WIND ZONE USING APPLICABLE ASCE 7 STANDARD.

STEP 2 DETERMINE DOOR CAPACITY FROM TABLES ON SHEETS 3 AND 3.1 FOR THE GLASS TYPE AND REINFORCING TO USE.

STEP 3 USING CHARTS ON SHEET 5 THRU 6.1 SELECT ANCHOR OPTION WITH DESIGN RATING MORE THAN DESIGN LOAD SPECIFIED IN STEP 1 ABOVE.

STEP 4 (IF REQUIRED) FOR SIDE BY SIDE DOORS WITH VERTICAL MULLION CHECK TUBE CAPACITY FROM CHART ON SHEET 13. SELECT ANCHORS AS PER STEP 3.

STEP 5 THE LOWEST VALUE RESULTING FROM STEPS 2, 3 AND 4 SHALL APPLY TO ENTIRE SYSTEM.

PRODUCT REVISED
as complying with the Florida
Building Code
Acceptance No 18-1103.05
Expiration Date JUNE 12, 2023
By Ishayl Llanda
Miami-Dade Product Control

JAWAD AHMAD
LICENSE
No. 70592
Aug 22,2019
STATE OF
FLORIDA
PROFESSIONAL ENGINEER

AL-FAROOQ CORPORATION
ENGINEERS & PRODUCT DEVELOPMENT
9360 SUNSET DRIVE, SUITE 220
MIAMI, FLORIDA 33173 (C.A.N. 3538)
TEL. (305) 264-8100 FAX. (305) 262-6978

COMP-ANL\W09-58CGI

SERIES-560 ALUM SLIDING GLASS DOOR (L.M.I.)

CGI Windows and Doors, Inc.
3780 West 104th Street
Hialeah, FL. 33018
Tel. (305) 593-6592 Fax. (305) 593-6590

revisions:

no	date	by	description
E	11.28.17		UPDATED TO 2017 FBC
F	03.14.18		REV. PER RER COMMENTS
G	04.24.18		REV. PER RER COMMENTS
H	07.29.19		REV. PER RER COMMENTS

date: 11-10-09
scale: 3/8"=1'-0"
dr. by: TARIQ
chk. by:

drawing no.
W09-58

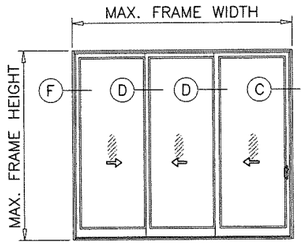

XXX (SHOWN)
OXX
XXO

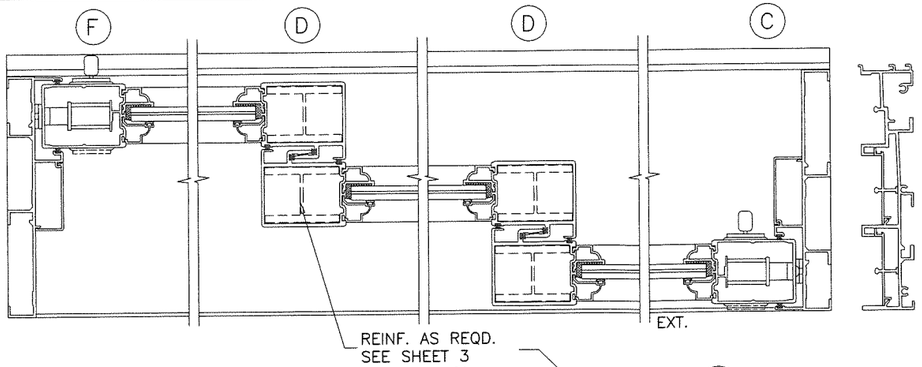

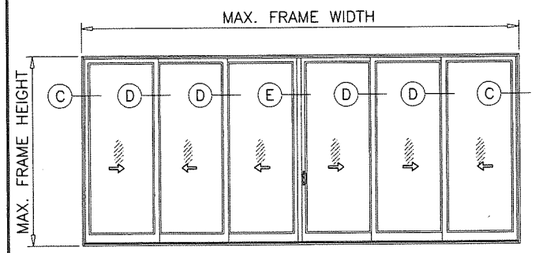

XXXXXX (SHOWN)
OXXXXO

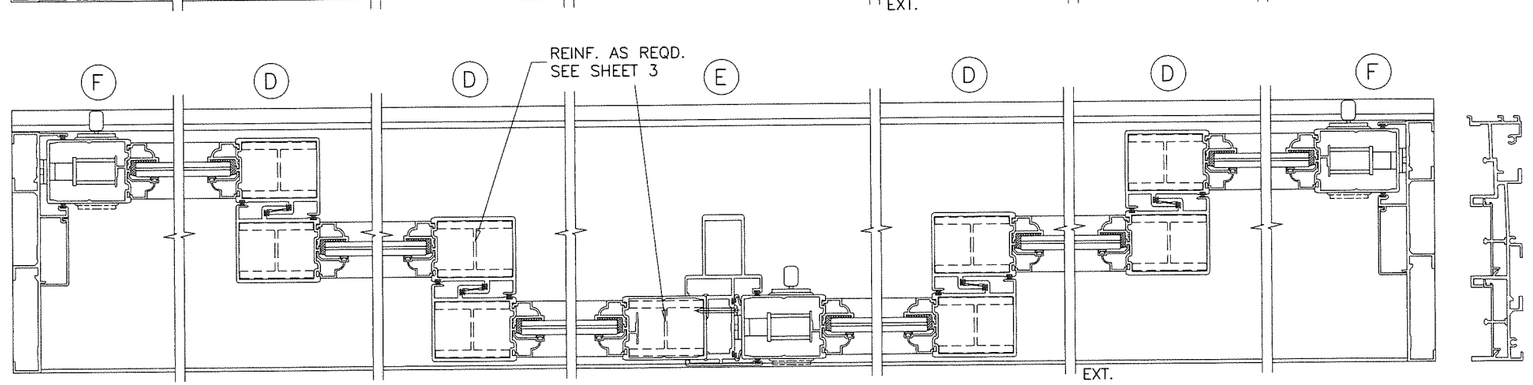

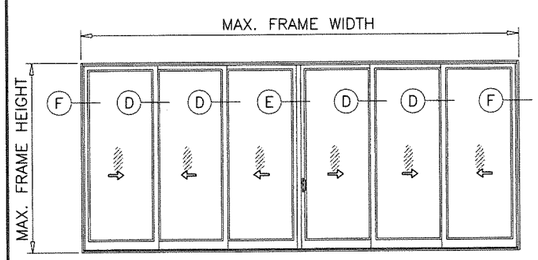

XXXXXX (SHOWN)
OXXXXO

APPROVED CONFIGURATIONS
NON–POCKETED DOORS

MAX. DOOR FRAME AREA NOT TO EXCEED
441.25 SQ. FT. FOR LOADS UP TO 105 PSF
351.56 SQ. FT. FOR LOADS ABOVE 105 PSF

Over–all Door Frame Width based on Panel Width

Panel Width	3 Panel Door Frame Width	6 Panel Door Frame Width
24 1/4"	69 1/4"	137 1/2"
30 1/4"	87 1/4"	173 1/2"
36 1/4"	105 1/4"	209 1/2"
42 1/4"	123 1/4"	245 1/2"
48 1/4"	141 1/4"	281 1/2"
54 1/4"	159 1/4"	317 1/2"
60 1/4"	177 1/4"	353 1/2"

MAXIMUM DOOR HEIGHT = 120"

Formula to convert Door Width to Panel Width

For 3 Panel Doors: (Door Width + 3 1/2")/3 = Panel Width
For 6 Panel Doors: (Door Width + 8")/6 = Panel Width

Formula to convert Panel Width to Door Width

For 3 Panel Doors: Panel Width x 3 – 3 1/2" = Door Width
For 6 Panel Doors: Panel Width x 6 – 8" = Door Width

Panel Height Formula

Door Height – 2 9/16" = Panel Height

D.L. OPENING
D.L.O HEIGHT = DOOR HEIGHT – 13 5/16"
D.L.O. WIDTH = PANEL WIDTH – 8"

PRODUCT REVISED
as complying with the Florida
building Code
Acceptance No. 18-1108.05
Expiration Date 6/12/23
Michael Thomas
Miami-Dade Product Control

JAVAD AHMAD
LICENSE
No. 70592
Aug 22,2019
STATE OF
FLORIDA
PROFESSIONAL ENGINEER

AL-FAROOQ CORPORATION
ENGINEERS & PRODUCT DEVELOPMENT
9360 SUNSET DRIVE, SUITE 220
MIAMI, FLORIDA 33173 (C.A.N. 3538)
TEL. (305) 264-8100 FAX. (305) 262-6978

COMP–ANL\W09–58CGI

SERIES–560 ALUM SLIDING GLASS DOOR (L.M.I.)

CGI Windows and Doors, Inc.
3780 West 104th Street
Hialeah, FL. 33018
Tel. (305) 593–6590 Fax. (305) 593–6592

revisions:

no	date	by	description
E	11.28.17		UPDATED TO 2017 FBC
F	03.14.18		NO CHANGE THIS SHEET
G	04.24.18		REV. PER RER COMMENTS
H	07.29.19		NO CHANGE THIS SHEET

date: 11–10–09
scale: –
dr. by: TARIQ
chk. by:

drawing no.
W09–58

sheet 2 of 13

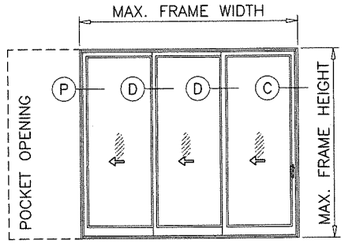

PXXX(SHOWN)
XXXP

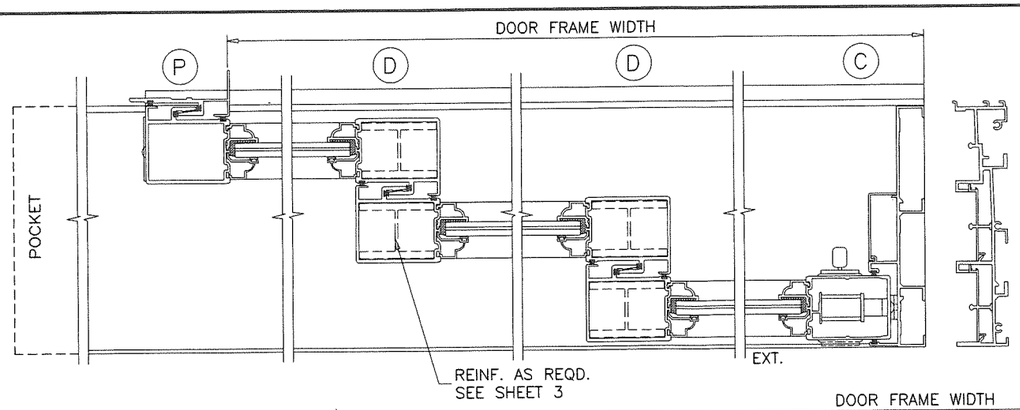

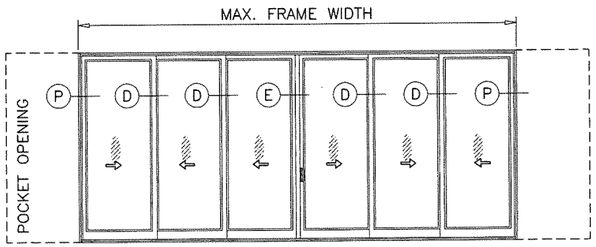

PXXXXXXP (SHOWN)

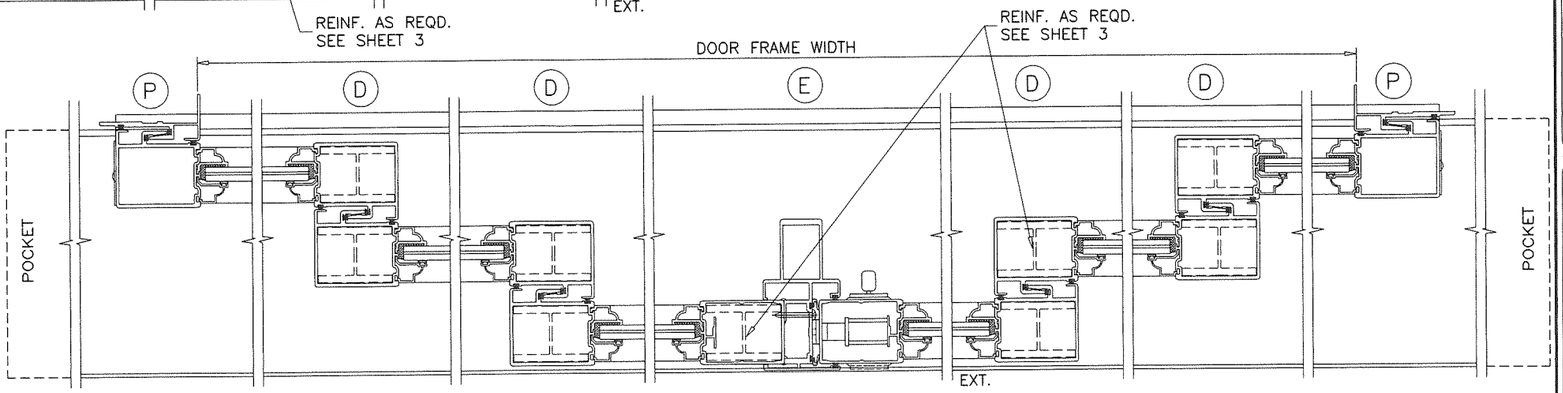

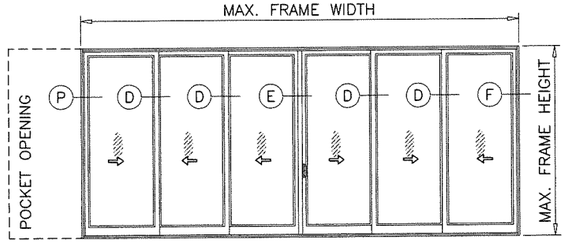

PXXXXXX(SHOWN)
PXXXXXO
XXXXXXP
OXXXXXP

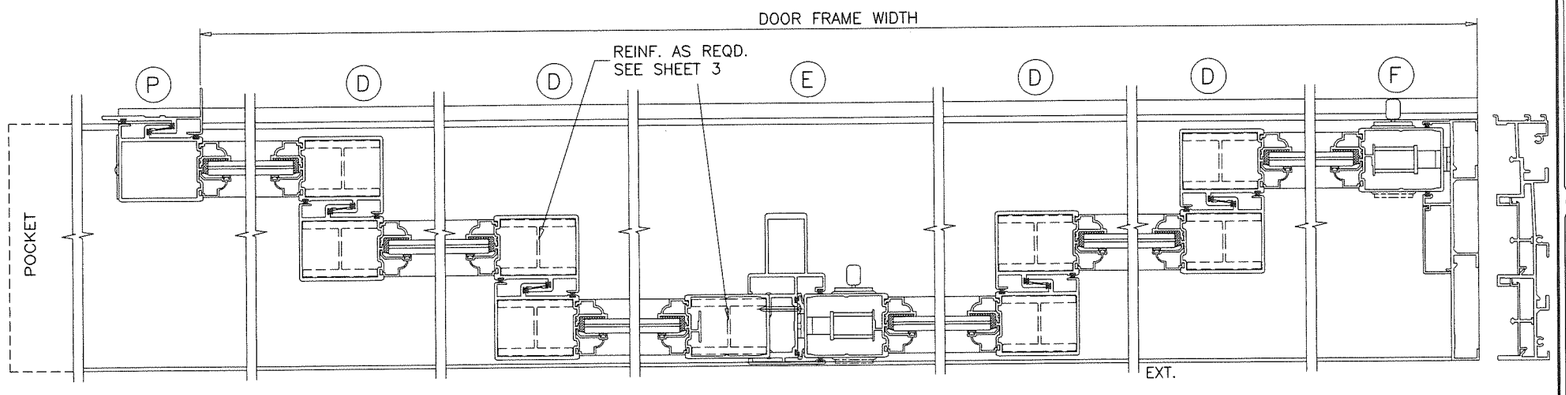

APPROVED CONFIGURATIONS
POCKETED DOORS

MAX. DOOR FRAME AREA NOT TO EXCEED
436.25 SQ. FT. FOR LOADS UP TO 105 PSF
346.25 SQ. FT. FOR LOADS ABOVE 105 PSF

Over-all Door Width based on Panel Width

Panel Width	PXXX, XXXP Door Width	PXXXXXXP Door Width	PXXXXXX Door Width
24 1/4"	65 1/4"	129 3/8"	133 7/16"
30 1/4"	83 1/4"	165 3/8"	169 7/16"
36 1/4"	101 1/4"	201 3/8"	205 7/16"
42 1/4"	119 1/4"	237 3/8"	241 7/16"
48 1/4"	137 1/4"	273 3/8"	277 7/16"
54 1/4"	155 1/4"	309 3/8"	313 7/16"
60 1/4"	173 1/4"	345 3/8"	349 7/16"

MAXIMUM DOOR HEIGHT = 120"

Formula to convert Door Width to Panel Width

For PXXX: (Door Width + 7 1/2")/3 = Panel Width
For PXXXXXXP: (Door Width + 16 1/8")/6 = Panel Width
For PXXXXXX: (Door Width + 12 1/16")/6 = Panel Width

Formula to convert Panel Width to Door Width

For PXXX: Panel Width x 3 − 7 1/2" = Door Width
For PXXXXXXP: Panel Width x 6 − 16 1/8" = Door Width
For PXXXXXX: Panel Width x 6 − 12 1/16" = Door Width

Panel Height Formula

Door Height − 2 9/16" = Panel Height

D.L. OPENING
D.L.O HEIGHT = DOOR HEIGHT − 13 5/16"
D.L.O. WIDTH = PANEL WIDTH − 8"

PRODUCT REVISED
as complying with the Florida
Building Code
Acceptance No 18-1108.05
Expiration Date 6/12/23
By Ishaq I. Ahmad
Director Dade Product Control

JAVAD AHMAD
LICENSE
No. 70592
Aug 22,2019
STATE OF FLORIDA
PROFESSIONAL ENGINEER

AL-FAROOQ CORPORATION
ENGINEERS & PRODUCT DEVELOPMENT
9360 SUNSET DRIVE, SUITE 220
MIAMI, FLORIDA 33173 (C.A.N. 3538)
TEL. (305) 264-8100 FAX. (305) 262-6978

COMP-ANL\W09-58CGI

SERIES-560 ALUM SLIDING GLASS DOOR (L.M.I.)

CGI Windows and Doors, Inc.
3780 West 104th Street
Hialeah, FL. 33018
Tel. (305) 593-6590 Fax. (305) 593-6592

revisions:

no	date	by	description
E	11.28.17		UPDATED TO 2017 FBC
F	03.14.18		NO CHANGE THIS SHEET
G	04.24.18		REV. PER RER COMMENTS
H	07.29.19		NO CHANGE THIS SHEET

date: 11-10-09
scale: -
dr. by: TARIQ
chk. by:

drawing no.
W09-58

DESIGN LOAD CAPACITY – PSF (GLASS)					
PANEL WIDTH INCHES	DOOR FRAME HEIGHT INCHES	W/O REINF. GLASS TYPES '1','1A','2'&'2A' EXT.(+)	W/O REINF. GLASS TYPES '1','1A','2'&'2A' INT.(–)	WITH REINF. GLASS TYPE '2A' EXT.(+)	WITH REINF. GLASS TYPE '2A' INT.(–)
24–1/4	80	120.0	130.5	120.0	170.0
30–1/4		109.3	109.3	120.0	170.0
33–1/4		101.6	101.6	120.0	170.0
36–1/4		93.2	93.2	120.0	170.0
39–1/4		86.1	86.1	120.0	170.0
42–1/4		79.9	79.9	120.0	159.9
44–1/4		76.3	76.3	120.0	152.7
46–1/4		73.0	73.0	120.0	146.1
48–1/4		70.0	70.0	120.0	140.0
50–1/4		67.2	67.2	115.2	134.4
52–1/4		64.6	64.6	110.8	129.3
54–1/4		62.3	62.3	106.7	124.5
56–1/4		60.0	60.0	102.9	120.1
58–1/4		58.0	58.0	99.4	116.0
60–1/4		56.1	56.1	96.1	112.1
24–1/4	84	120.0	130.0	120.0	170.0
30–1/4		108.8	108.8	120.0	170.0
33–1/4		101.2	101.2	120.0	170.0
36–1/4		93.2	93.2	120.0	170.0
39–1/4		86.1	86.1	120.0	170.0
42–1/4		79.9	79.9	120.0	159.9
44–1/4		76.3	76.3	120.0	152.7
46–1/4		73.0	73.0	120.0	146.1
48–1/4		70.0	70.0	120.0	140.0
50–1/4		67.2	67.2	115.2	134.4
52–1/4		64.6	64.6	110.8	129.3
54–1/4		62.3	62.3	106.7	124.5
56–1/4		60.0	60.0	102.9	120.1
58–1/4		58.0	58.0	99.4	116.0
60–1/4		56.1	56.1	96.1	112.1
24–1/4	90	120.0	128.6	120.0	170.0
30–1/4		107.2	107.2	120.0	170.0
33–1/4		99.5	99.5	120.0	170.0
36–1/4		93.2	93.2	120.0	170.0
39–1/4		86.1	86.1	120.0	170.0
42–1/4		79.9	79.9	120.0	159.9
44–1/4		76.3	76.3	120.0	152.7
46–1/4		73.0	73.0	120.0	146.1
48–1/4		70.0	70.0	120.0	140.0
50–1/4		67.2	67.2	115.2	134.4
52–1/4		64.6	64.6	110.8	129.3
54–1/4		62.3	62.3	106.7	124.5
56–1/4		60.0	60.0	102.9	120.1
58–1/4		58.0	58.0	99.4	116.0
60–1/4		56.1	56.1	96.1	112.1
24–1/4	96	120.0	127.4	120.0	170.0
30–1/4		105.9	105.9	120.0	170.0
33–1/4		98.9	98.9	120.0	170.0
36–1/4		91.8	91.8	120.0	170.0
39–1/4		86.1	86.1	120.0	170.0
42–1/4		79.9	79.9	120.0	159.9
44–1/4		76.3	76.3	120.0	152.7
46–1/4		73.0	73.0	120.0	146.1
48–1/4		70.0	70.0	120.0	140.0
50–1/4		67.2	67.2	115.2	134.4
52–1/4		64.6	64.6	110.8	129.3
54–1/4		62.3	62.3	106.7	124.5
56–1/4		60.0	60.0	102.9	120.1
58–1/4		58.0	58.0	99.4	116.0
60–1/4		56.1	56.1	96.1	112.1

DESIGN LOAD CAPACITY – PSF (GLASS)					
PANEL WIDTH INCHES	DOOR FRAME HEIGHT INCHES	W/O REINF. GLASS TYPES '1','1A','2'&'2A' EXT.(+)	W/O REINF. GLASS TYPES '1','1A','2'&'2A' INT.(–)	WITH REINF. GLASS TYPE '2A' EXT.(+)	WITH REINF. GLASS TYPE '2A' INT.(–)
24–1/4	99	80.0	80.0	120.0	140.0
30–1/4		80.0	80.0	120.0	140.0
33–1/4		80.0	80.0	120.0	140.0
36–1/4		80.0	80.0	120.0	140.0
39–1/4		80.0	80.0	120.0	140.0
42–1/4		79.9	79.9	120.0	140.0
44–1/4		76.3	76.3	120.0	140.0
46–1/4		73.0	73.0	120.0	140.0
48–1/4		70.0	70.0	120.0	140.0
50–1/4		67.2	67.2	115.2	134.4
52–1/4		64.6	64.6	110.8	129.3
54–1/4		62.3	62.3	106.7	124.5
56–1/4		60.0	60.0	102.9	120.1
58–1/4		58.0	58.0	99.4	116.0
24–1/4	102	80.0	80.0	120.0	140.0
30–1/4		80.0	80.0	120.0	140.0
33–1/4		80.0	80.0	120.0	140.0
36–1/4		80.0	80.0	120.0	140.0
39–1/4		80.0	80.0	120.0	140.0
42–1/4		80.0	79.9	120.0	140.0
44–1/4		80.0	76.3	120.0	140.0
46–1/4		73.0	73.0	120.0	140.0
48–1/4		70.0	70.0	120.0	140.0
50–1/4		67.2	67.2	115.2	134.4
52–1/4		64.6	64.6	110.8	129.3
54–1/4		62.3	62.3	106.7	124.5
56–1/4		60.0	60.0	102.9	120.1
24–1/4	105	80.0	80.0	120.0	140.0
30–1/4		80.0	80.0	120.0	140.0
33–1/4		80.0	80.0	120.0	140.0
36–1/4		80.0	80.0	120.0	140.0
39–1/4		80.0	80.0	120.0	140.0
42–1/4		79.9	79.9	120.0	140.0
44–1/4		76.3	76.3	120.0	140.0
46–1/4		73.0	73.0	120.0	140.0
48–1/4		70.0	70.0	120.0	140.0
50–1/4		67.2	67.2	115.2	34.4
52–1/4		64.6	64.6	110.8	129.3
54–1/4		62.3	62.3	106.7	124.5
24–1/4	108	80.0	80.0	120.0	140.0
30–1/4		80.0	80.0	120.0	140.0
33–1/4		80.0	80.0	120.0	140.0
36–1/4		80.0	80.0	120.0	140.0
39–1/4		80.0	80.0	120.0	140.0
42–1/4		79.4	79.4	120.0	140.0
44–1/4		76.3	76.3	120.0	140.0
46–1/4		73.0	73.0	120.0	140.0
48–1/4		70.0	70.0	120.0	140.0
50–1/4		67.2	67.2	115.2	134.4
52–1/4		64.6	64.6	110.8	129.3

DESIGN LOAD CAPACITY – PSF (GLASS)					
PANEL WIDTH INCHES	DOOR FRAME HEIGHT INCHES	W/O REINF. GLASS TYPES '1','1A','2'&'2A' EXT.(+)	W/O REINF. GLASS TYPES '1','1A','2'&'2A' INT.(–)	WITH REINF. GLASS TYPE '2A' EXT.(+)	WITH REINF. GLASS TYPE '2A' INT.(–)
24–1/4	111	80.0	80.0	120.0	140.0
30–1/4		80.0	80.0	120.0	140.0
33–1/4		80.0	80.0	120.0	140.0
36–1/4		80.0	80.0	120.0	140.0
39–1/4		80.0	80.0	120.0	140.0
42–1/4		78.9	78.9	120.0	140.0
44–1/4		76.2	76.2	120.0	140.0
46–1/4		73.0	73.0	120.0	140.0
48–1/4		70.0	70.0	120.0	140.0
50–1/4		67.2	67.2	115.2	134.4
24–1/4	114	80.0	80.0	120.0	140.0
30–1/4		80.0	80.0	120.0	140.0
33–1/4		80.0	80.0	120.0	140.0
36–1/4		80.0	80.0	120.0	140.0
39–1/4		80.0	80.0	120.0	140.0
42–1/4		78.4	78.4	120.0	140.0
44–1/4		75.7	75.7	120.0	140.0
46–1/4		73.0	73.0	120.0	140.0
48–1/4		70.0	70.0	120.0	140.0
50–1/4		67.2	67.2	115.2	134.4
24–1/4	117	80.0	80.0	120.0	140.0
30–1/4		80.0	80.0	120.0	140.0
33–1/4		80.0	80.0	120.0	140.0
36–1/4		80.0	80.0	120.0	140.0
39–1/4		80.0	80.0	120.0	140.0
42–1/4		77.9	77.9	120.0	140.0
44–1/4		75.2	75.2	120.0	140.0
46–1/4		72.7	72.7	120.0	140.0
48–1/4		70.0	70.0	120.0	140.0
24–1/4	120	80.0	80.0	120.0	140.0
30–1/4		80.0	80.0	120.0	140.0
33–1/4		80.0	80.0	120.0	140.0
36–1/4		80.0	80.0	120.0	140.0
39–1/4		80.0	80.0	120.0	140.0
42–1/4		77.5	77.5	120.0	140.0
44–1/4		74.8	74.8	120.0	140.0
46–1/4		72.3	72.3	120.0	140.0
48–1/4		70.0	70.0	120.0	140.0

GLASS CAPACITY CHARTS

W/O REINFORCEMENTS: GLASS TYPES 1, IA, 2, & 2A
W/ REINFORCEMENTS: GLASS TYPE 2A
(SEE GLASS DETAILS IN SHEET 4)

NOTE:
APPROPRIATE SILL RISER TO BE SELECTED FOR MAX. POSITIVE DESIGN PRESSURE SEE DETAILS ON SHEET 4.
OBTAIN ANCHOR TYPE AND CONFIGURATION TO USE FROM ANCHOR CHARTS ON SHEET 5
MULLION SIZE AND CAPACITY TO BE OBTAINED FROM CHARTS ON SHEET 13.
LOWEST APPLICABLE VALUE FROM THE ABOVE WILL APPLY TO CONDITION REVIEWED.

NOTE:
GLASS CAPACITIES ON THIS SHEET ARE BASED ON ASTM E1300–09 (3 SEC. GUSTS) AND FLORIDA BUILDING COMMISSION DECLARATORY STATEMENT DCA05–DEC–219

PRODUCT REVIEWED
as complying with the Florida Building Code
Acceptance No. 16-1108.05
Expiration Date 6.12.23
By Ishaq I. Lunat
Miami-Dade Product Control

JAWAD AHMAD LICENSE No. 70592 STATE OF FLORIDA PROFESSIONAL ENGINEER Aug 22,2019

AL-FAROOQ CORPORATION
ENGINEERS & PRODUCT DEVELOPMENT
9360 SUNSET DRIVE, SUITE 220
MIAMI, FLORIDA 33173 (C.A.N. 3538)
TEL. (305) 264-8100 FAX. (305) 262-6978

COMP–ANL\W09–58CGI

SERIES–560 ALUM SLIDING GLASS DOOR (L.M.I.)

CGI Windows and Doors, Inc.
3780 West 104th Street
Hialeah, FL. 33018
Tel. (305) 593–6590 Fax. (305) 593–6592

revisions:

no	date	by	description
E	11.28.17		UPDATED TO 2017 FBC
F	03.14.18		REV. PER RER COMMENTS
G	04.24.18		REV. PER RER COMMENTS
H	07.29.19		NO CHANGE THIS SHEET

date: 11–10–09
scale: –
dr. by: TARIQ
chk. by:

drawing no. W09–58

DESIGN LOAD CAPACITY – PSF (GLASS)					
		WITH REINF.			
PANEL WIDTH INCHES	DOOR FRAME HEIGHT INCHES	GLASS TYPE '2'		GLASS TYPE '2.1'	
		EXT.(+)	INT.(–)	EXT.(+)	INT.(–)
24–1/4	80	120.0	170.0	120.0	170.0
30–1/4		120.0	170.0	120.0	170.0
33–1/4		120.0	170.0	120.0	170.0
36–1/4		120.0	170.0	120.0	170.0
39–1/4		120.0	170.0	120.0	170.0
42–1/4		120.0	159.9	120.0	159.9
44–1/4		120.0	152.7	120.0	152.7
46–1/4		120.0	146.1	120.0	146.1
48–1/4		120.0	140.0	120.0	140.0
50–1/4		115.2	134.4	115.2	134.4
52–1/4		110.8	129.3	110.8	129.3
54–1/4		106.7	124.5	106.7	124.5
56–1/4		105.0	120.1	105.0	120.1
58–1/4		105.0	116.0	105.0	116.0
60–1/4		105.0	112.1	105.0	112.1
24–1/4	84	120.0	170.0	120.0	170.0
30–1/4		120.0	170.0	120.0	170.0
33–1/4		120.0	170.0	120.0	170.0
36–1/4		120.0	170.0	120.0	170.0
39–1/4		120.0	170.0	120.0	170.0
42–1/4		120.0	159.9	120.0	159.9
44–1/4		120.0	152.7	120.0	152.7
46–1/4		120.0	146.1	120.0	146.1
48–1/4		120.0	140.0	120.0	140.0
50–1/4		115.2	134.4	115.2	134.4
52–1/4		110.8	129.3	110.8	129.3
54–1/4		106.7	124.5	106.7	124.5
56–1/4		105.0	120.1	105.0	120.1
58–1/4		105.0	116.0	105.0	116.0
60–1/4		105.0	112.1	105.0	112.1
24–1/4	90	120.0	170.0	120.0	170.0
30–1/4		120.0	170.0	120.0	170.0
33–1/4		120.0	170.0	120.0	170.0
36–1/4		120.0	170.0	120.0	170.0
39–1/4		120.0	170.0	120.0	170.0
42–1/4		120.0	159.9	120.0	159.9
44–1/4		120.0	152.7	120.0	152.7
46–1/4		120.0	146.1	120.0	146.1
48–1/4		120.0	140.0	120.0	140.0
50–1/4		115.2	134.4	115.2	134.4
52–1/4		110.8	129.3	110.8	129.3
54–1/4		106.7	124.5	106.7	124.5
56–1/4		105.0	120.1	105.0	120.1
58–1/4		105.0	116.0	105.0	116.0
60–1/4		105.0	112.1	105.0	112.1
24–1/4	96	120.0	170.0	120.0	170.0
30–1/4		120.0	170.0	120.0	170.0
33–1/4		120.0	170.0	120.0	170.0
36–1/4		120.0	170.0	120.0	170.0
39–1/4		120.0	170.0	120.0	170.0
42–1/4		120.0	159.9	120.0	159.9
44–1/4		120.0	152.7	120.0	152.7
46–1/4		120.0	146.1	120.0	146.1
48–1/4		120.0	140.0	120.0	140.0
50–1/4		115.2	134.4	115.2	134.4
52–1/4		110.8	129.3	110.8	129.3
54–1/4		106.7	124.5	106.7	124.5
56–1/4		105.0	120.1	105.0	120.1
58–1/4		105.0	116.0	105.0	116.0
60–1/4		105.0	112.1	105.0	112.1

DESIGN LOAD CAPACITY – PSF (GLASS)					
		WITH REINF.			
PANEL WIDTH INCHES	DOOR FRAME HEIGHT INCHES	GLASS TYPE '2'		GLASS TYPE '2.1'	
		EXT.(+)	INT.(–)	EXT.(+)	INT.(–)
24–1/4	99	120.0	140.0	120.0	140.0
30–1/4		120.0	140.0	120.0	140.0
33–1/4		120.0	140.0	120.0	140.0
36–1/4		120.0	140.0	120.0	140.0
39–1/4		120.0	140.0	120.0	140.0
42–1/4		120.0	140.0	120.0	140.0
44–1/4		120.0	140.0	120.0	140.0
46–1/4		120.0	140.0	120.0	140.0
48–1/4		120.0	140.0	120.0	140.0
50–1/4		115.2	134.4	115.2	134.4
52–1/4		110.8	129.3	110.8	129.3
54–1/4		106.7	124.5	106.7	124.5
56–1/4		105.0	120.1	105.0	120.1
58–1/4		105.0	116.0	105.0	116.0
60–1/4		105.0	105.0	105.0	105.0
24–1/4	102	120.0	140.0	120.0	140.0
30–1/4		120.0	140.0	120.0	140.0
33–1/4		120.0	140.0	120.0	140.0
36–1/4		120.0	140.0	120.0	140.0
39–1/4		120.0	140.0	120.0	140.0
42–1/4		120.0	140.0	120.0	140.0
44–1/4		120.0	140.0	120.0	140.0
46–1/4		120.0	140.0	120.0	140.0
48–1/4		120.0	140.0	120.0	140.0
50–1/4		115.2	134.4	115.2	134.4
52–1/4		110.8	129.3	110.8	129.3
54–1/4		106.7	124.5	106.7	124.5
56–1/4		105.0	120.1	105.0	120.1
58–1/4		105.0	116.0	105.0	116.0
60–1/4		105.0	105.0	105.0	105.0
24–1/4	105	120.0	140.0	120.0	140.0
30–1/4		120.0	140.0	120.0	140.0
33–1/4		120.0	140.0	120.0	140.0
36–1/4		120.0	140.0	120.0	140.0
39–1/4		120.0	140.0	120.0	140.0
42–1/4		120.0	140.0	120.0	140.0
44–1/4		120.0	140.0	120.0	140.0
46–1/4		120.0	140.0	120.0	140.0
48–1/4		120.0	140.0	120.0	140.0
50–1/4		115.2	34.4	115.2	34.4
52–1/4		110.8	129.3	110.8	129.3
54–1/4		106.7	124.5	106.7	124.5
56–1/4		105.0	105.0	105.0	105.0
58–1/4		105.0	105.0	105.0	105.0
60–1/4		105.0	105.0	105.0	105.0
24–1/4	108	120.0	140.0	120.0	140.0
30–1/4		120.0	140.0	120.0	140.0
33–1/4		120.0	140.0	120.0	140.0
36–1/4		120.0	140.0	120.0	140.0
39–1/4		120.0	140.0	120.0	140.0
42–1/4		120.0	140.0	120.0	140.0
44–1/4		120.0	140.0	120.0	140.0
46–1/4		120.0	140.0	120.0	140.0
48–1/4		120.0	140.0	120.0	140.0
50–1/4		115.2	134.4	115.2	134.4
52–1/4		110.8	129.3	110.8	129.3
54–1/4		105.0	105.0	105.0	105.0
56–1/4		105.0	105.0	105.0	105.0
58–1/4		105.0	105.0	105.0	105.0
60–1/4		105.0	105.0	105.0	105.0

DESIGN LOAD CAPACITY – PSF (GLASS)					
		WITH REINF.			
PANEL WIDTH INCHES	DOOR FRAME HEIGHT INCHES	GLASS TYPE '2'		GLASS TYPE '2.1'	
		EXT.(+)	INT.(–)	EXT.(+)	INT.(–)
24–1/4	111	120.0	140.0	120.0	140.0
30–1/4		120.0	140.0	120.0	140.0
33–1/4		120.0	140.0	120.0	140.0
36–1/4		120.0	140.0	120.0	140.0
39–1/4		120.0	140.0	120.0	140.0
42–1/4		120.0	140.0	120.0	140.0
44–1/4		120.0	140.0	120.0	140.0
46–1/4		120.0	140.0	120.0	140.0
48–1/4		120.0	140.0	120.0	140.0
50–1/4		115.2	134.4	115.2	134.4
52–1/4		105.0	105.0	105.0	105.0
54–1/4		105.0	105.0	105.0	105.0
56–1/4		105.0	105.0	105.0	105.0
58–1/4		105.0	105.0	104.0	104.0
60–1/4		105.0	105.0	102.0	102.0
24–1/4	114	120.0	140.0	120.0	140.0
30–1/4		120.0	140.0	120.0	140.0
33–1/4		120.0	140.0	120.0	140.0
36–1/4		120.0	140.0	120.0	140.0
39–1/4		120.0	140.0	120.0	140.0
42–1/4		120.0	140.0	120.0	140.0
44–1/4		120.0	140.0	120.0	140.0
46–1/4		120.0	140.0	120.0	140.0
48–1/4		120.0	140.0	120.0	140.0
50–1/4		115.2	134.4	115.2	134.4
52–1/4		105.0	105.0	105.0	105.0
54–1/4		105.0	105.0	105.0	105.0
56–1/4		105.0	105.0	104.0	104.0
58–1/4		105.0	105.0	101.0	101.0
60–1/4		105.0	105.0	99.5	99.5
24–1/4	117	120.0	140.0	120.0	140.0
30–1/4		120.0	140.0	120.0	140.0
33–1/4		120.0	140.0	120.0	140.0
36–1/4		120.0	140.0	120.0	140.0
39–1/4		120.0	140.0	120.0	140.0
42–1/4		120.0	140.0	120.0	140.0
44–1/4		120.0	140.0	120.0	140.0
46–1/4		120.0	140.0	120.0	140.0
48–1/4		120.0	140.0	120.0	140.0
50–1/4		105.0	105.0	105.0	105.0
52–1/4		105.0	105.0	105.0	105.0
54–1/4		105.0	105.0	105.0	105.0
56–1/4		105.0	105.0	102.0	102.0
58–1/4		105.0	105.0	99.2	99.2
60–1/4		105.0	105.0	96.7	96.7
24–1/4	120	120.0	140.0	120.0	140.0
30–1/4		120.0	140.0	120.0	140.0
33–1/4		120.0	140.0	120.0	140.0
36–1/4		120.0	140.0	120.0	140.0
39–1/4		120.0	140.0	120.0	140.0
42–1/4		120.0	140.0	120.0	140.0
44–1/4		120.0	140.0	120.0	140.0
46–1/4		120.0	140.0	120.0	140.0
48–1/4		120.0	140.0	120.0	140.0
50–1/4		105.0	105.0	105.0	105.0
52–1/4		105.0	105.0	105.0	105.0
54–1/4		105.0	105.0	103.0	103.0
56–1/4		105.0	105.0	100.0	100.0
58–1/4		105.0	105.0	97.2	97.2
60–1/4		105.0	105.0	94.6	94.6

GLASS CAPACITY CHARTS

W/ REINFORCEMENTS: GLASS TYPES 2 & 2.1
(SEE GLASS DETAILS IN SHEET 4)

NOTE:
APPROPRIATE SILL RISER TO BE SELECTED FOR MAX. POSITIVE DESIGN PRESSURE SEE DETAILS ON SHEET 4.
OBTAIN ANCHOR TYPE AND CONFIGURATION TO USE FROM ANCHOR CHARTS ON SHEET 5
MULLION SIZE AND CAPACITY TO BE OBTAINED FROM CHARTS ON SHEET 13.
LOWEST APPLICABLE VALUE FROM THE ABOVE WILL APPLY TO CONDITION REVIEWED.

NOTE:
GLASS CAPACITIES ON THIS SHEET ARE BASED ON ASTM E1300–09 (3 SEC. GUSTS) AND FLORIDA BUILDING COMMISSION DECLARATORY STATEMENT DCA05–DEC–219

PRODUCT REVIEWED
as complying with the Florida Building Code
Acceptance No. 18-1108.05
Expiration Date 6/12/23
By: Ishaq I. Hamad
Miami-Dade Product Control

JAVAD AHMAD
LICENSE
No. 70592
Aug 22,2019
STATE OF FLORIDA
PROFESSIONAL ENGINEER

AL-FAROOQ CORPORATION
ENGINEERS & PRODUCT DEVELOPMENT
9360 SUNSET DRIVE, SUITE 220
MIAMI, FLORIDA 33173 (C.A.N. 3538)
TEL. (305) 264-8100 FAX. (305) 262-6978

COMP–ANL\W09–58CGI

SERIES–560 ALUM SLIDING GLASS DOOR (L.M.I.)

CGI Windows and Doors, Inc.
3780 West 104th Street
Hialeah, FL. 33018
Tel. (305) 593–6592 Fax. (305) 593–6592

revisions:

no	date	by	description
E	11.28.17		UPDATED TO 2017 FBC
F	03.14.18		NO CHANGE THIS SHEET
G	04.24.18		REV. PER RER COMMENTS
H	07.29.19		NO CHANGE THIS SHEET

date: 11–10–09
scale: –
dr. by: TARIQ
chk. by:

drawing no.
W09–58

sheet 3.1 of 13

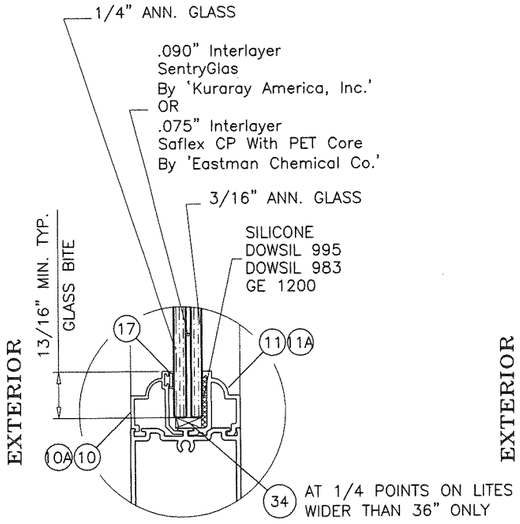

GLASS TYPE '1'

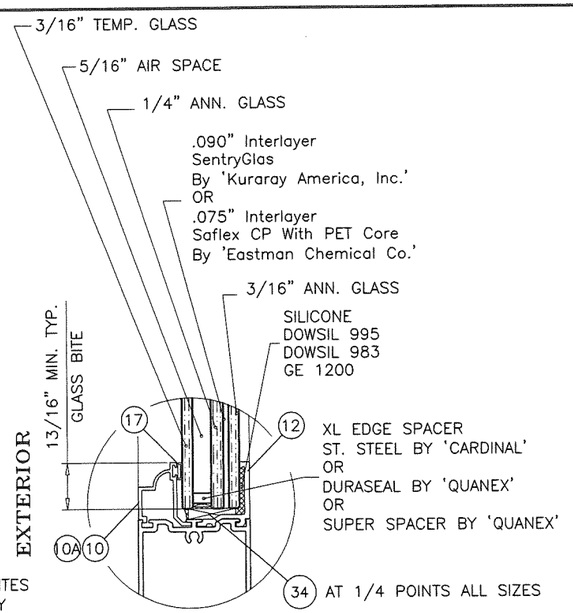

GLASS TYPE '1A'

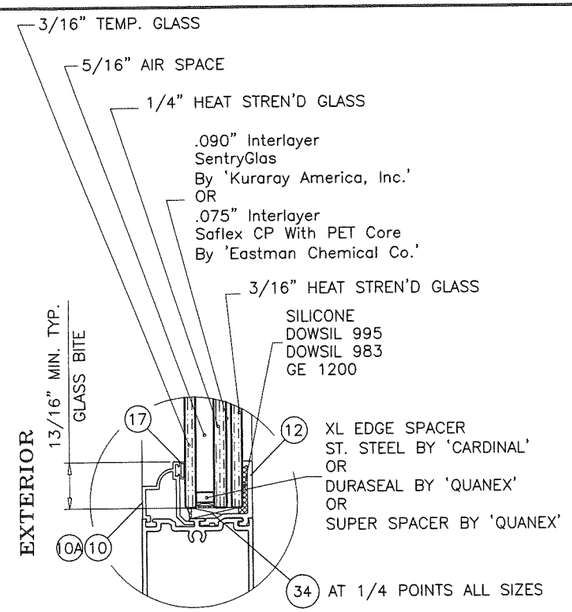

GLASS TYPE '2A'

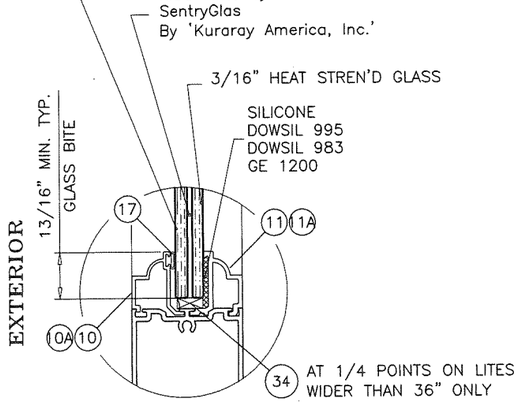

GLASS TYPE '2'

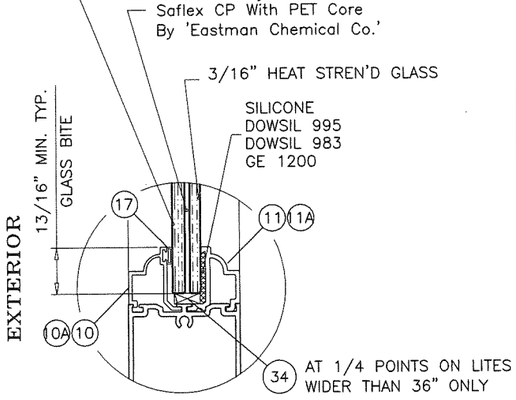

GLASS TYPE '2.1'

GLAZING OPTIONS

NOTE:
3/16" AND 1/4" PIECES OF GLASS ON THE
1/2" LAMINATED UNIT ARE INTERCHANGEABLE
(EX: 3/16" + 1/4" OR 1/4" + 3/16")
LIMIT MAX. PANEL AREA TO 40.2 SQ. FT.

FOR PANEL AREAS > 40.2 SQ. FT.
LAMINATED PLIES MUST BE
1/4" + 3/16" (AS SHOWN IN DETAILS)

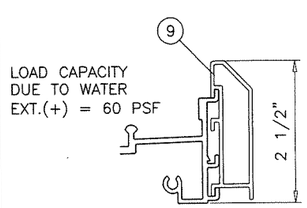

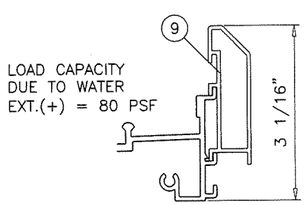

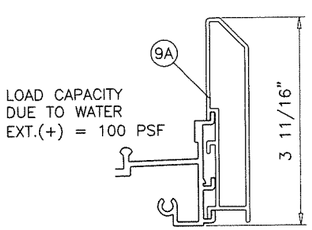

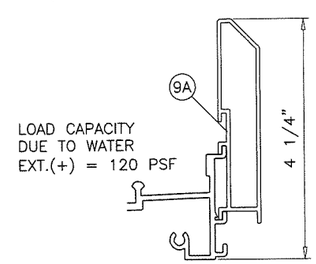

LOAD CAPACITIES SHOWN IN CHART ON SHEET 3 ARE FOR DOORS USING 4-1/4" SILL HEIGHTS
FOR DOORS USING LOWER SILL HEIGHTS LIMIT EXTERIOR(+) LOADS AS SHOWN ABOVE.

PRODUCT REVIEWED
as complying with the Florida
Building Code
Acceptance No. 18-1108.05
Expiration Date 6/12/23
by, Ishaq I. Chanda
Miami-Dade Product Control

JAWAD AHMAD
LICENSE
No. 70592
Aug 22,2019
STATE OF
FLORIDA
PROFESSIONAL ENGINEER

AL-FAROOQ CORPORATION
ENGINEERS & PRODUCT DEVELOPMENT
9360 SUNSET DRIVE, SUITE 220
MIAMI, FLORIDA 33173 (C.A.N. 3538)
TEL. (305) 264-8100 FAX. (305) 262-6978

COMP-ANL\W09-58CGI

SERIES-560 ALUM SLIDING GLASS DOOR (L.M.I.)

CGI Windows and Doors, Inc.
3780 West 104th Street
Hialeah, FL. 33018
Tel. (305) 593-6590 Fax. (305) 593-6592

revisions:

no	date	by	description
E	11.28.17		UPDATED TO 2017 FBC
F	03.14.18		REV. PER RER COMMENTS
G	04.24.18		REV. PER RER COMMENTS
H	07.29.19		REV. PER RER COMMENTS

date: 11-10-09
scale: -
dr. by: TARIQ
chk. by:

drawing no.
W09-58

sheet 4 of 13

DESIGN LOAD CAPACITY – PSF (ANCHORS AT HEAD/SILL)

PANEL WIDTH INCHES	DOOR FRAME HEIGHT INCHES	ANCHORS TYPE 'A' 1/4" SHIM SPACE CLUSTER OF			ANCHORS TYPE 'B' 1/4" SHIM SPACE CLUSTER OF			ANCHORS TYPE 'A' & 'B' 3/8" SHIM SPACE CLUSTER OF				ANCHORS TYPE 'A' & 'B' 1/2" SHIM SPACE CLUSTER OF				ANCHORS TYPE 'C' 1/4" SHIM SPACE CLUSTER OF		
		4	6	8	4	6	8	4	6	8	10	6	8	10	12	4	6	8
24–1/4	80	152.0	170.0	170.0	168.0	170.0	170.0	119.2	170.0	170.0	170.0	139.0	170.0	170.0	–	170.0	170.0	170.0
30–1/4		121.9	170.0	170.0	134.7	170.0	170.0	95.5	143.3	170.0	170.0	111.5	148.6	170.0	–	152.8	170.0	170.0
36–1/4		152.5	170.0	170.0	168.6	170.0	170.0	119.6	159.5	170.0	170.0	124.0	155.0	170.0	170.0	170.0	170.0	170.0
42–1/4		130.9	159.9	159.9	144.7	159.9	159.9	102.6	136.8	159.9	159.9	106.4	133.0	159.6	159.9	159.9	159.9	159.9
48–1/4		114.6	140.0	140.0	126.7	140.0	140.0	89.8	119.8	140.0	140.0	93.2	116.5	139.8	140.0	140.0	140.0	140.0
54–1/4		101.9	124.5	124.5	112.7	124.5	124.5	79.9	106.5	124.5	124.5	82.9	103.6	124.3	124.5	124.5	124.5	124.5
60–1/4		91.8	112.1	112.1	101.5	112.1	112.1	72.0	95.9	112.1	112.1	74.6	93.3	111.9	112.1	112.1	112.1	112.1
24–1/4	84	144.8	170.0	170.0	160.0	170.0	170.0	113.5	170.0	170.0	170.0	132.4	170.0	170.0	–	170.0	170.0	170.0
30–1/4		116.1	170.0	170.0	128.3	170.0	170.0	91.0	136.5	170.0	170.0	106.2	141.5	170.0	–	145.5	170.0	170.0
36–1/4		145.3	170.0	170.0	160.6	170.0	170.0	113.9	151.9	170.0	170.0	118.1	147.6	170.0	170.0	170.0	170.0	170.0
42–1/4		124.6	159.9	159.9	137.8	159.9	159.9	97.7	130.3	159.9	159.9	101.3	126.7	152.0	159.9	156.3	159.9	159.9
48–1/4		109.1	140.0	140.0	120.7	140.0	140.0	85.6	114.1	140.0	140.0	88.7	110.9	133.1	140.0	136.9	140.0	140.0
54–1/4		97.1	124.5	124.5	107.3	124.5	124.5	76.1	101.5	124.5	124.5	78.9	98.7	118.4	124.5	121.7	124.5	124.5
60–1/4		87.4	112.1	112.1	96.6	112.1	112.1	68.5	91.4	112.1	112.1	71.1	88.8	106.6	112.1	109.6	112.1	112.1
24–1/4	90	135.1	170.0	170.0	149.4	170.0	170.0	105.9	158.9	170.0	170.0	123.6	164.8	170.0	–	169.4	170.0	170.0
30–1/4		108.3	162.5	170.0	119.7	170.0	170.0	84.9	127.4	169.8	170.0	99.1	132.1	165.1	170.0	135.8	170.0	170.0
36–1/4		135.6	170.0	170.0	149.9	170.0	170.0	106.3	141.7	170.0	170.0	110.2	137.8	165.4	170.0	170.0	170.0	170.0
42–1/4		116.3	155.1	159.9	128.6	159.9	159.9	91.2	121.6	152.0	159.9	94.6	118.2	141.9	159.9	145.9	159.9	159.9
48–1/4		101.9	135.8	140.0	112.6	140.0	140.0	79.9	106.5	133.1	140.0	82.8	103.5	124.2	140.0	127.7	140.0	140.0
54–1/4		90.6	120.8	124.5	100.2	124.5	124.5	71.0	94.7	118.4	124.5	73.7	92.1	110.5	124.5	113.6	124.5	124.5
60–1/4		81.6	108.8	112.1	90.2	112.1	112.1	64.0	85.3	106.6	112.1	66.3	82.9	99.5	112.1	102.3	112.1	112.1
24–1/4	96	126.7	170.0	170.0	140.0	170.0	170.0	99.3	149.0	170.0	170.0	115.9	154.5	170.0	–	158.8	170.0	170.0
30–1/4		101.6	152.3	170.0	112.3	168.4	170.0	79.6	119.4	159.2	170.0	92.9	123.8	154.8	170.0	127.3	170.0	170.0
36–1/4		127.1	169.5	170.0	140.5	170.0	170.0	99.7	132.9	166.1	170.0	103.3	129.2	155.0	170.0	159.4	170.0	170.0
42–1/4		109.1	145.4	159.9	120.6	159.9	159.9	85.5	114.0	142.5	159.9	88.7	110.8	133.0	155.2	136.8	159.9	159.9
48–1/4		95.5	127.3	140.0	105.6	140.0	140.0	74.9	99.8	124.8	140.0	77.6	97.1	116.5	135.9	119.8	140.0	140.0
54–1/4		84.9	113.3	124.5	93.9	124.5	124.5	66.6	88.8	111.0	124.5	69.1	86.3	103.6	120.9	106.5	124.5	124.5
60–1/4		76.5	102.0	112.1	84.5	112.1	112.1	60.0	79.9	99.9	112.1	62.2	77.7	93.3	108.8	95.9	112.1	112.1
24–1/4	102	119.2	140.0	140.0	131.8	140.0	140.0	93.5	140.0	140.0	140.0	109.1	140.0	140.0	–	140.0	140.0	140.0
30–1/4		95.6	140.0	140.0	105.7	140.0	140.0	74.9	112.4	140.0	140.0	87.4	116.6	140.0	–	119.8	140.0	140.0
36–1/4		119.6	140.0	140.0	132.3	140.0	140.0	93.8	125.1	140.0	140.0	97.3	121.6	140.0	140.0	140.0	140.0	140.0
42–1/4		102.6	136.9	140.0	113.5	140.0	140.0	80.5	107.3	134.1	140.0	83.5	104.3	125.2	140.0	128.7	140.0	140.0
48–1/4		89.9	119.8	140.0	99.4	132.5	140.0	70.5	94.0	117.4	140.0	73.1	91.3	109.6	127.9	112.7	140.0	140.0
54–1/4		79.9	106.6	124.5	88.4	117.8	124.5	62.7	83.6	104.5	124.5	65.0	81.2	97.5	113.7	100.2	124.5	124.5
60–1/4		72.0	96.0	105.0	79.6	105.0	105.0	56.4	75.2	94.1	105.0	58.5	73.2	87.8	90.0	90.3	105.0	105.0
24–1/4	108	112.6	140.0	140.0	124.5	140.0	140.0	88.3	132.4	140.0	140.0	103.0	137.3	140.0	–	140.0	140.0	140.0
30–1/4		90.3	135.4	140.0	99.8	140.0	140.0	70.8	106.2	140.0	140.0	82.6	110.1	137.6	140.0	113.2	140.0	140.0
36–1/4		113.0	140.0	140.0	124.9	140.0	140.0	88.6	118.1	140.0	140.0	91.9	114.8	137.8	140.0	140.0	140.0	140.0
42–1/4		96.9	129.3	140.0	107.2	140.0	140.0	76.0	101.3	126.7	140.0	78.8	98.5	118.2	137.9	121.6	140.0	140.0
48–1/4		84.9	113.2	140.0	93.8	125.1	140.0	66.6	88.7	110.9	133.1	69.0	86.3	103.5	120.8	106.4	140.0	140.0
54–1/4		75.5	100.7	105.0	83.5	105.0	105.0	59.2	78.9	98.7	105.0	61.4	76.7	90.0	90.0	94.7	105.0	105.0
60–1/4		68.0	90.6	105.0	75.2	100.2	105.0	53.3	71.1	88.8	105.0	55.3	69.1	82.9	90.0	85.2	105.0	105.0
24–1/4	114	106.7	140.0	140.0	117.9	140.0	140.0	83.6	125.5	140.0	140.0	97.6	130.1	140.0	–	133.8	140.0	140.0
30–1/4		85.5	128.3	140.0	94.5	140.0	140.0	67.0	100.6	134.1	140.0	78.2	104.3	130.4	140.0	107.2	140.0	140.0
36–1/4		107.0	140.0	140.0	118.3	140.0	140.0	83.9	111.9	139.9	140.0	87.0	108.8	130.5	140.0	134.2	140.0	140.0
42–1/4		91.8	122.5	140.0	101.5	135.4	140.0	72.0	96.0	120.0	140.0	74.7	93.3	112.0	130.7	115.2	140.0	140.0
48–1/4		80.4	107.2	134.0	88.9	118.5	140.0	63.1	84.1	105.1	126.1	65.4	81.7	98.1	114.4	100.8	134.5	140.0
54–1/4		71.5	95.4	105.0	79.1	105.0	105.0	56.1	74.8	93.5	105.0	58.2	72.7	87.2	90.0	89.7	105.0	105.0
60–1/4		64.4	85.9	105.0	71.2	94.9	105.0	50.5	67.3	84.2	101.0	52.4	65.5	78.5	90.0	80.8	105.0	105.0
24–1/4	120	101.3	140.0	140.0	112.0	140.0	140.0	79.5	119.2	140.0	140.0	92.7	123.6	140.0	–	127.1	140.0	140.0
30–1/4		81.2	121.9	140.0	89.8	134.7	140.0	63.7	95.5	127.4	140.0	74.3	99.1	123.8	140.0	101.9	140.0	140.0
36–1/4		101.7	135.6	140.0	112.4	140.0	140.0	79.7	106.3	132.9	140.0	82.7	103.3	124.0	140.0	127.5	140.0	140.0
42–1/4		87.3	116.3	140.0	96.5	128.6	140.0	68.4	91.2	114.0	136.8	70.9	88.7	106.4	124.1	109.4	140.0	140.0
48–1/4		76.4	101.9	127.3	84.5	112.6	140.0	59.9	79.9	99.8	119.8	62.1	77.6	93.2	108.7	95.8	127.7	140.0
54–1/4		68.0	90.6	105.0	75.1	100.2	105.0	53.3	71.0	88.8	105.0	55.2	69.1	82.9	90.0	85.2	105.0	105.0
60–1/4		61.2	81.6	102.0	67.6	90.2	105.0	48.0	64.0	79.9	95.9	49.7	62.2	74.6	87.1	76.7	102.3	105.0

NOTE:
SEE SHEET 8 FOR ANCHOR TYPES AND DETAILS.
ANCHOR CAPACITIES LISTED ON THIS SHEET TO BE USED IN CONJUNCTION WITH GLASS/REINFORCING AND MULLION CHARTS IN THIS DOCUMENT. LOWER APPLICABLE VALUES CONTROL.

INTERPOLATION BETWEEN WIDTHS AND HEIGHTS ACCEPTABLE

PRODUCT REVIEWED as complying with the Florida Building Code
Acceptance No. 18-1108.05
Expiration Date 6/12/23
By: Ishaq I. Chanda
Mi ami Dade Product Control

JAVAD AHMAD LICENSE No. 70592 STATE OF FLORIDA PROFESSIONAL ENGINEER Aug 22,2019

AL-FAROOQ CORPORATION
ENGINEERS & PRODUCT DEVELOPMENT
9360 SUNSET DRIVE, SUITE 220 (C.A.N. 3538)
MIAMI, FLORIDA 33173
TEL. (305) 264-8100 FAX. (305) 262-6978

COMP-ANL\W09-58CGI

SERIES-560 ALUM SLIDING GLASS DOOR (L.M.I.)

CGI Windows and Doors, Inc.
3780 West 104th Street
Hialeah, FL. 33018
Tel. (305) 593-6590 Fax. (305) 593-6592

revisions:

no	date	by	description
E	11.28.17		UPDATED TO 2017 FBC
F	03.14.18		NO CHANGE THIS SHEET
G	04.24.18		REV. PER RER COMMENTS
H	07.29.19		NO CHANGE THIS SHEET

date: 11-10-09
scale: –
dr. by: TARIQ
chk. by:

drawing no. W09–58

sheet 5 of 13

DESIGN LOAD CAPACITY – PSF (ANCHORS AT HEAD/SILL)														
PANEL WIDTH INCHES	DOOR FRAME HEIGHT INCHES	ANCHORS TYPE 'D' 1/4" SHIM SPACE CLUSTER OF			ANCHORS TYPE 'E' 1/4" SHIM SPACE CLUSTER OF			ANCHORS TYPE 'D' & 'E' 3/8" SHIM SPACE CLUSTER OF				ANCHORS TYPE 'D' & 'E' 1/2" SHIM SPACE CLUSTER OF			
		4	6	8	4	6	8	4	6	8	10	6	8	10	12
24–1/4	80	167.5	170.0	170.0	170.0	170.0	170.0	150.5	170.0	170.0	170.0	170.0	170.0	170.0	–
30–1/4		134.2	170.0	170.0	159.9	170.0	170.0	120.7	170.0	170.0	170.0	141.7	170.0	170.0	–
36–1/4		168.0	170.0	170.0	170.0	170.0	170.0	151.1	170.0	170.0	170.0	157.6	170.0	170.0	170.0
42–1/4		144.2	159.9	159.9	159.9	159.9	159.9	129.6	159.9	159.9	159.9	135.2	159.9	159.9	159.9
48–1/4		126.2	140.0	140.0	140.0	140.0	140.0	113.5	140.0	140.0	140.0	118.4	140.0	140.0	140.0
54–1/4		112.3	124.5	124.5	124.5	124.5	124.5	100.9	124.5	124.5	124.5	105.3	124.5	124.5	124.5
60–1/4		101.1	112.1	112.1	112.1	112.1	112.1	90.9	112.1	112.1	112.1	94.8	112.1	112.1	112.1
24–1/4	84	159.5	170.0	170.0	170.0	170.0	170.0	143.4	170.0	170.0	170.0	168.3	170.0	170.0	–
30–1/4		127.8	170.0	170.0	152.3	170.0	170.0	114.9	170.0	170.0	170.0	134.9	170.0	170.0	–
36–1/4		160.0	170.0	170.0	170.0	170.0	170.0	143.9	170.0	170.0	170.0	150.1	170.0	170.0	170.0
42–1/4		137.3	159.9	159.9	159.9	159.9	159.9	123.4	159.9	159.9	159.9	128.8	159.9	159.9	159.9
48–1/4		120.2	140.0	140.0	140.0	140.0	140.0	108.1	140.0	140.0	140.0	112.8	140.0	140.0	140.0
54–1/4		106.9	124.5	124.5	124.5	124.5	124.5	96.1	124.5	124.5	124.5	100.3	124.5	124.5	124.5
60–1/4		96.3	112.1	112.1	112.1	112.1	112.1	86.6	112.1	112.1	112.1	90.3	112.1	112.1	112.1
24–1/4	90	148.8	170.0	170.0	170.0	170.0	170.0	133.8	170.0	170.0	170.0	157.1	170.0	170.0	–
30–1/4		119.3	170.0	170.0	142.2	170.0	170.0	107.3	160.9	170.0	170.0	125.9	167.9	170.0	–
36–1/4		149.4	170.0	170.0	170.0	170.0	170.0	134.3	170.0	170.0	170.0	140.1	170.0	170.0	170.0
42–1/4		128.2	159.9	159.9	152.7	159.9	159.9	115.2	153.6	159.9	159.9	120.2	150.3	159.9	159.9
48–1/4		112.2	140.0	140.0	133.7	140.0	140.0	100.9	134.5	140.0	140.0	105.3	131.6	140.0	140.0
54–1/4		99.8	124.5	124.5	118.9	124.5	124.5	89.7	119.6	124.5	124.5	93.6	117.0	124.5	124.5
60–1/4		89.9	112.1	112.1	107.1	112.1	112.1	80.8	107.7	112.1	112.1	84.3	105.4	112.1	112.1
24–1/4	96	139.5	170.0	170.0	166.3	170.0	170.0	125.4	170.0	170.0	170.0	147.3	170.0	170.0	–
30–1/4		111.9	167.8	170.0	133.3	170.0	170.0	100.6	150.8	170.0	170.0	118.1	157.4	170.0	–
36–1/4		140.0	170.0	170.0	166.8	170.0	170.0	125.9	167.8	170.0	170.0	131.4	164.2	170.0	170.0
42–1/4		120.1	159.9	159.9	143.1	159.9	159.9	108.0	144.0	159.9	159.9	112.7	140.9	159.9	159.9
48–1/4		105.2	140.0	140.0	125.3	140.0	140.0	94.6	126.1	140.0	140.0	98.7	123.4	140.0	140.0
54–1/4		93.6	124.5	124.5	111.5	124.5	124.5	84.1	112.1	124.5	124.5	87.8	109.7	124.5	124.5
60–1/4		84.2	112.1	112.1	100.4	112.1	112.1	75.7	101.0	112.1	112.1	79.0	98.8	112.1	112.1
24–1/4	102	131.3	140.0	140.0	140.0	140.0	140.0	118.1	140.0	140.0	140.0	138.6	140.0	140.0	–
30–1/4		105.3	140.0	140.0	125.4	140.0	140.0	94.6	140.0	140.0	140.0	111.1	140.0	140.0	–
36–1/4		131.8	140.0	140.0	140.0	140.0	140.0	118.5	140.0	140.0	140.0	123.6	140.0	140.0	140.0
42–1/4		113.1	140.0	140.0	134.7	140.0	140.0	101.6	135.5	140.0	140.0	106.1	132.6	140.0	140.0
48–1/4		99.0	132.0	140.0	118.0	140.0	140.0	89.0	118.7	140.0	140.0	92.9	116.1	139.3	140.0
54–1/4		88.1	117.4	124.5	104.9	124.5	124.5	79.2	105.6	124.5	124.5	82.6	103.3	123.9	124.5
60–1/4		79.3	105.0	105.0	94.5	105.0	105.0	71.3	95.0	105.0	105.0	74.4	90.0	105.0	105.0
24–1/4	108	124.0	140.0	140.0	140.0	140.0	140.0	111.5	140.0	140.0	140.0	130.9	140.0	140.0	–
30–1/4		99.4	140.0	140.0	118.5	140.0	140.0	89.4	134.1	140.0	140.0	104.9	139.9	140.0	–
36–1/4		124.5	140.0	140.0	140.0	140.0	140.0	111.9	140.0	140.0	140.0	116.8	140.0	140.0	140.0
42–1/4		106.8	140.0	140.0	127.2	140.0	140.0	96.0	128.0	140.0	140.0	100.2	125.2	140.0	140.0
48–1/4		93.5	124.7	140.0	111.4	140.0	140.0	84.1	112.1	140.0	140.0	87.7	109.7	131.6	140.0
54–1/4		83.2	105.0	105.0	99.1	105.0	105.0	74.8	99.7	105.0	105.0	78.0	90.0	105.0	105.0
60–1/4		74.9	99.9	105.0	89.2	105.0	105.0	67.3	89.8	105.0	105.0	70.2	87.8	105.0	105.0
24–1/4	114	117.5	140.0	140.0	140.0	140.0	140.0	105.6	140.0	140.0	140.0	124.0	140.0	140.0	–
30–1/4		94.2	140.0	140.0	112.2	140.0	140.0	84.7	127.0	140.0	140.0	99.4	132.6	140.0	–
36–1/4		117.9	140.0	140.0	140.0	140.0	140.0	106.0	140.0	140.0	140.0	110.6	138.3	140.0	140.0
42–1/4		101.2	134.9	140.0	120.5	140.0	140.0	90.9	121.3	140.0	140.0	94.9	118.6	140.0	140.0
48–1/4		88.6	118.1	140.0	105.6	140.0	140.0	79.6	106.2	132.7	140.0	83.1	103.9	124.7	140.0
54–1/4		78.8	105.0	105.0	93.9	105.0	105.0	70.8	94.4	105.0	105.0	73.9	90.0	105.0	105.0
60–1/4		70.9	94.6	105.0	84.5	105.0	105.0	63.8	85.0	105.0	105.0	66.6	83.2	99.8	105.0
24–1/4	120	111.6	140.0	140.0	133.0	140.0	140.0	100.4	140.0	140.0	140.0	117.8	140.0	140.0	–
30–1/4		89.5	134.2	140.0	106.6	140.0	140.0	80.4	120.7	140.0	140.0	94.4	125.9	140.0	–
36–1/4		112.0	140.0	140.0	133.5	140.0	140.0	100.7	134.3	140.0	140.0	105.1	131.4	140.0	140.0
42–1/4		96.1	128.2	140.0	114.5	140.0	140.0	86.4	115.2	140.0	140.0	90.2	112.7	135.2	140.0
48–1/4		84.2	112.2	140.0	100.3	133.7	140.0	75.7	100.9	126.1	140.0	78.9	98.7	118.4	138.2
54–1/4		74.9	99.8	105.0	89.2	105.0	105.0	67.3	89.7	105.0	105.0	70.2	87.8	105.0	105.0
60–1/4		67.4	89.9	105.0	80.3	105.0	105.0	60.6	80.8	101.0	105.0	63.2	79.0	94.8	105.0

INTERPOLATION BETWEEN WIDTHS AND HEIGHTS ACCEPTABLE

NOTE:
SEE SHEET 8 FOR ANCHOR TYPES AND DETAILS.
ANCHOR CAPACITIES LISTED ON THIS SHEET TO BE USED IN CONJUNCTION WITH GLASS/REINFORCING AND MULLION CHARTS IN THIS DOCUMENT.
LOWER APPLICABLE VALUES CONTROL.

PRODUCT REVIEWED
as complying with the Florida Building Code
Acceptance No 16-1108.05
Expiration Date 6/13/23
By [signature]
Miami-Dade Product Control

JAVAD AHMAD LICENSE No. 70592 Aug 22,2019 STATE OF FLORIDA PROFESSIONAL ENGINEER

AL-FAROOQ CORPORATION
ENGINEERS & PRODUCT DEVELOPMENT
9360 SUNSET DRIVE, SUITE 220 (C.A.N. 3538)
MIAMI, FLORIDA 33173
TEL. (305) 264-8100 FAX. (305) 262-6978

COMP–ANL\W09–58CGI

SERIES–560 ALUM SLIDING GLASS DOOR (L.M.I.)

CGI Windows and Doors, Inc.
3780 West 104th Street
Hialeah, FL. 33018
Tel. (305) 593–6590 Fax. (305) 593–6592

revisions:			
no	date	by	description
E	11.28.17		UPDATED TO 2017 FBC
F	03.14.18		REV. PER RER COMMENTS
G	04.24.18		REV. PER RER COMMENTS
H	07.29.19		NO CHANGE THIS SHEET

date: 11–10–09
scale: –
dr. by: TARIQ
chk. by:

drawing no. W09–58

sheet 6 of 13

DESIGN LOAD CAPACITY – PSF (ANCHORS AT HEAD/SILL)												
PANEL WIDTH INCHES	DOOR FRAME HEIGHT INCHES	ANCHORS TYPE 'AA' 1/4" SHIM SPACE CLUSTER OF		ANCHORS TYPE 'BB' 1/4" SHIM SPACE CLUSTER OF		ANCHORS TYPE 'AA' & 'BB' 3/8" SHIM SPACE CLUSTER OF			ANCHORS TYPE 'AA' & 'BB' 1/2" SHIM SPACE CLUSTER OF			
		4	6	4	6	4	6	8	6	8	10	12
24–1/4	80	170.0	170.0	170.0	170.0	155.0	170.0	170.0	170.0	170.0	170.0	–
30–1/4		163.3	170.0	170.0	170.0	124.3	170.0	170.0	146.8	170.0	170.0	–
36–1/4		170.0	170.0	170.0	170.0	155.6	170.0	170.0	163.3	170.0	170.0	170.0
42–1/4		159.9	159.9	159.9	159.9	133.5	159.9	159.9	140.1	159.9	159.9	159.9
48–1/4		140.0	140.0	140.0	140.0	116.9	140.0	140.0	122.7	140.0	140.0	140.0
54–1/4		124.5	124.5	124.5	124.5	104.0	124.5	124.5	109.1	124.5	124.5	124.5
60–1/4		112.1	112.1	112.1	112.1	93.6	112.1	112.1	98.3	112.1	112.1	112.1
24–1/4	84	170.0	170.0	170.0	170.0	147.7	170.0	170.0	170.0	170.0	170.0	–
30–1/4		155.5	170.0	170.0	170.0	118.4	170.0	170.0	139.8	170.0	170.0	–
36–1/4		170.0	170.0	170.0	170.0	148.2	170.0	170.0	155.6	170.0	170.0	170.0
42–1/4		159.9	159.9	159.9	159.9	127.1	159.9	159.9	133.5	159.9	159.9	159.9
48–1/4		140.0	140.0	140.0	140.0	111.3	140.0	140.0	116.9	140.0	140.0	140.0
54–1/4		124.5	124.5	124.5	124.5	99.0	124.5	124.5	104.0	124.5	124.5	124.5
60–1/4		112.1	112.1	112.1	112.1	89.1	112.1	112.1	93.6	112.1	112.1	112.1
24–1/4	90	170.0	170.0	170.0	170.0	137.8	170.0	170.0	162.8	170.0	170.0	–
30–1/4		145.1	170.0	170.0	170.0	110.5	165.7	170.0	130.5	170.0	170.0	–
36–1/4		170.0	170.0	170.0	170.0	138.3	170.0	170.0	145.2	170.0	170.0	170.0
42–1/4		155.9	159.9	159.9	159.9	118.7	158.2	159.9	124.6	155.7	159.9	159.9
48–1/4		136.5	140.0	140.0	140.0	103.9	138.5	140.0	109.1	136.4	140.0	140.0
54–1/4		121.4	124.5	124.5	124.5	92.4	123.2	124.5	97.0	121.3	124.5	124.5
60–1/4		109.3	112.1	112.1	112.1	83.2	110.9	112.1	87.4	109.2	112.1	112.1
24–1/4	96	169.7	170.0	170.0	170.0	129.2	170.0	170.0	152.6	170.0	170.0	–
30–1/4		136.1	170.0	159.5	170.0	103.6	155.4	170.0	122.3	163.1	170.0	–
36–1/4		170.0	170.0	170.0	170.0	129.6	170.0	170.0	136.1	170.0	170.0	170.0
42–1/4		146.1	159.9	159.9	159.9	111.2	148.3	159.9	116.8	146.0	159.9	159.9
48–1/4		128.0	140.0	140.0	140.0	97.4	129.9	140.0	102.3	127.8	140.0	140.0
54–1/4		113.8	124.5	124.5	124.5	86.6	115.5	124.5	91.0	113.7	124.5	124.5
60–1/4		102.5	112.1	112.1	112.1	78.0	104.0	112.1	81.9	102.4	112.1	112.1
24–1/4	102	140.0	140.0	140.0	140.0	121.6	140.0	140.0	140.0	140.0	140.0	–
30–1/4		128.1	140.0	140.0	140.0	97.5	140.0	140.0	115.1	140.0	140.0	–
36–1/4		140.0	140.0	140.0	140.0	122.0	140.0	140.0	128.1	140.0	140.0	140.0
42–1/4		137.5	140.0	140.0	140.0	104.7	139.6	140.0	109.9	137.4	140.0	140.0
48–1/4		120.4	140.0	140.0	140.0	91.7	122.2	140.0	96.3	120.3	140.0	140.0
54–1/4		107.1	124.5	124.5	124.5	81.5	108.7	124.5	85.6	107.0	124.5	124.5
60–1/4		96.4	105.0	105.0	105.0	73.4	97.9	105.0	77.1	90.0	105.0	105.0
24–1/4	108	140.0	140.0	140.0	140.0	114.8	140.0	140.0	135.7	140.0	140.0	–
30–1/4		120.9	140.0	140.0	140.0	92.1	138.1	140.0	108.7	140.0	140.0	–
36–1/4		140.0	140.0	140.0	140.0	115.2	140.0	140.0	121.0	140.0	140.0	140.0
42–1/4		129.9	140.0	140.0	140.0	98.9	131.8	140.0	103.8	129.8	140.0	140.0
48–1/4		113.7	140.0	133.3	140.0	86.6	115.4	140.0	90.9	113.6	136.4	140.0
54–1/4		101.2	105.0	105.0	105.0	77.0	102.7	105.0	80.9	90.0	105.0	105.0
60–1/4		91.1	105.0	105.0	105.0	69.3	92.5	105.0	72.8	90.0	105.0	105.0
24–1/4	114	140.0	140.0	140.0	140.0	108.8	140.0	140.0	128.5	140.0	140.0	–
30–1/4		114.6	140.0	134.3	140.0	87.2	130.8	140.0	103.0	137.4	140.0	–
36–1/4		140.0	140.0	140.0	140.0	109.2	140.0	140.0	114.6	140.0	140.0	140.0
42–1/4		123.1	140.0	140.0	140.0	93.7	124.9	140.0	98.3	122.9	140.0	140.0
48–1/4		107.8	140.0	126.3	140.0	82.0	109.4	136.7	86.1	107.6	129.2	140.0
54–1/4		95.8	105.0	105.0	105.0	73.0	97.3	105.0	76.6	90.0	105.0	105.0
60–1/4		86.3	105.0	101.1	105.0	65.7	87.6	105.0	69.0	86.2	103.5	105.0
24–1/4	120	135.8	140.0	140.0	140.0	103.4	140.0	140.0	122.1	140.0	140.0	–
30–1/4		108.9	140.0	127.6	140.0	82.9	124.3	140.0	97.9	130.5	140.0	–
36–1/4		136.3	140.0	140.0	140.0	103.7	138.3	140.0	108.9	136.1	140.0	140.0
42–1/4		116.9	140.0	137.0	140.0	89.0	118.7	140.0	93.4	116.8	140.0	140.0
48–1/4		102.4	136.5	120.0	140.0	77.9	103.9	129.9	81.8	102.3	122.7	140.0
54–1/4		91.0	105.0	105.0	105.0	69.3	92.4	105.0	72.8	90.0	105.0	105.0
60–1/4		82.0	105.0	96.1	105.0	62.4	83.2	104.0	65.5	81.9	98.3	105.0

INTERPOLATION BETWEEN WIDTHS AND HEIGHTS ACCEPTABLE

NOTE:
SEE SHEET 8 FOR ANCHOR TYPES AND DETAILS.
ANCHOR CAPACITIES LISTED ON THIS SHEET TO BE USED IN CONJUNCTION WITH GLASS/REINFORCING AND MULLION CHARTS IN THIS DOCUMENT.
LOWER APPLICABLE VALUES CONTROL.

PRODUCT REVIEWED
as complying with the Florida Building Code
Acceptance No. 18-1108.05
Expiration Date 6.11.23
By: Ishaq Ahmad
Miami-Dade Product Control

JAVAD AHMAD LICENSE No. 70592 Aug 22,2019 STATE OF FLORIDA PROFESSIONAL ENGINEER

AL-FAROOQ CORPORATION
ENGINEERS & PRODUCT DEVELOPMENT
9360 SUNSET DRIVE, SUITE 220
MIAMI, FLORIDA 33173 (C.A.N. 3538)
TEL. (305) 264-8100 FAX. (305) 262-6978
COMP-ANL\W09-58CGI

SERIES-560 ALUM SLIDING GLASS DOOR (L.M.I.)

CGI Windows and Doors, Inc.
3780 West 104th Street
Hialeah, FL. 33018
Tel. (305) 593-6590 Fax. (305) 593-6592

revisions:			
no	date	by	description
E	11.28.17		UPDATED TO 2017 FBC
F	03.14.18		NO CHANGE THIS SHEET
G	04.24.18		REV. PER RER COMMENTS
H	07.29.19		NO CHANGE THIS SHEET

date: 11–10–09
scale: –
dr. by: TARIQ
chk. by:

drawing no. W09–58

sheet 6.1 of 13

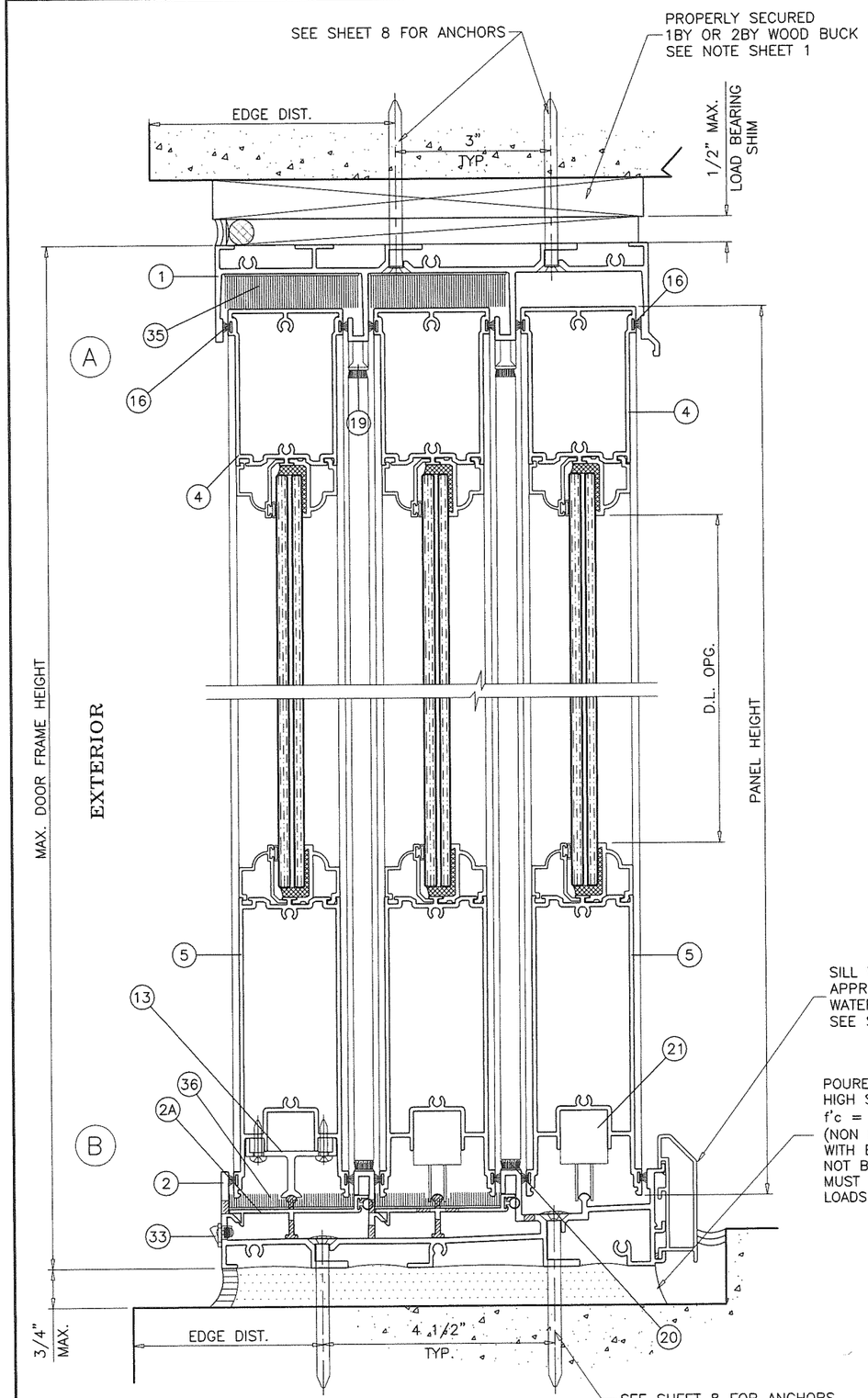

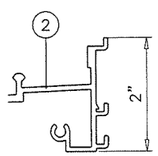

SILL WITHOUT RISER NOT APPROVED FOR INSTALLATIONS WHERE WATER INFILTRATION RESISTANCE IS REQUIRED.
MAX. DESIGN LOAD FOR THIS SILL IS THE SAME AS 4-1/4" RISER.

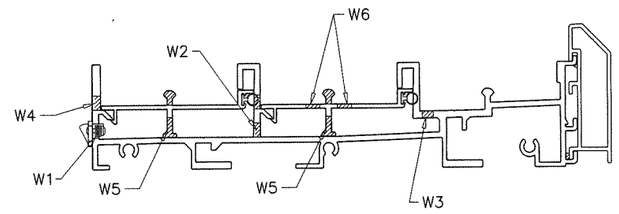

WEEPS:

W1 = 1/4"" X 2" WEEP SLOTS WITH PLASTIC COVER AT 7" FROM EACH END AND ±21" O.C.

W2 = 1/4" X 2" WEEP SLOTS AT 4" FROM EACH END AND ±12" O.C.

W3 = 3/8" X 5/8" WEEP HOLES AT 9" FROM EACH END AND ±21" O.C.

W4 = 1/4" X 2" WEEP SLOTS AT 4" FROM EACH END AND ±12" O.C.

W5 = 5/8" WEEP HOLES (1) AT 3" & 9" FROM EACH END, REST AT ±13" O.C.

W6 = 1/4" X 5/8" WEEP HOLES AT 60" FROM EACH END AND ±18" O.C.

PRODUCT REVIEWED
as complying with the Florida
Building Code
Acceptance No. 18-1108.05
Expiration Date 6/12/23
By Ishaq I. Chand
Mr. and Beale Product Control

JAVAD AHMAD
LICENSE
No. 70592
Aug 22,2019
STATE OF
FLORIDA
PROFESSIONAL ENGINEER

AL-FAROOQ CORPORATION
ENGINEERS & PRODUCT DEVELOPMENT
9360 SUNSET DRIVE, SUITE 220
MIAMI, FLORIDA 33173 (C.A.N. 3538)
TEL. (305) 264-8100 FAX. (305) 262-6978

COMP-ANL\W09-58CGI

SERIES-560 ALUM SLIDING GLASS DOOR (L.M.I.)

CGI Windows and Doors, Inc.
3780 West 104th Street
Hialeah, FL. 33018
Tel. (305) 593-6590 Fax. (305) 593-6592

revisions:

no	date	by	description
E	11.28.17		UPDATED TO 2017 FBC
F	03.14.18		REV. PER RER COMMENTS
G	04.24.18		REV. PER RER COMMENTS
H	07.29.19		NO CHANGE THIS SHEET

date: 11-10-09
scale: 3/8" = 1"
dr. by: TARIQ
chk. by:

drawing no.
W09-58

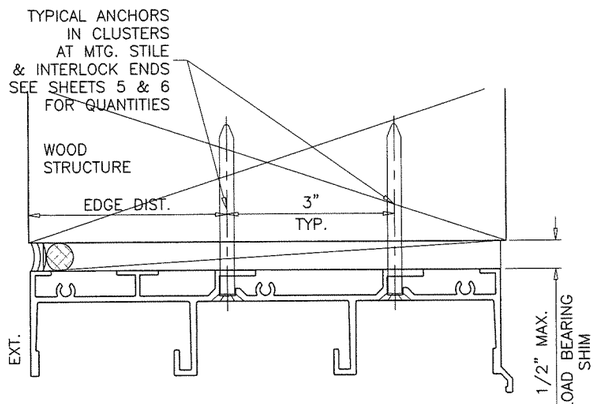

ANCHORS TYPES A AND D
INTO WOOD STRUCTURES

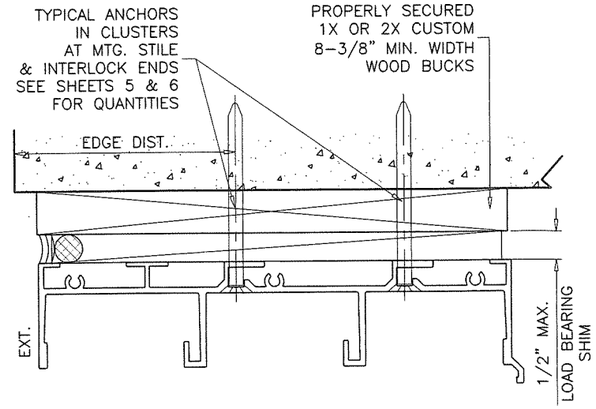

ANCHORS TYPES A AND D
THRU PROPERLY SECURED 1BY OR 2BY WOOD BUCKS
INTO 3 KSI CONCRETE

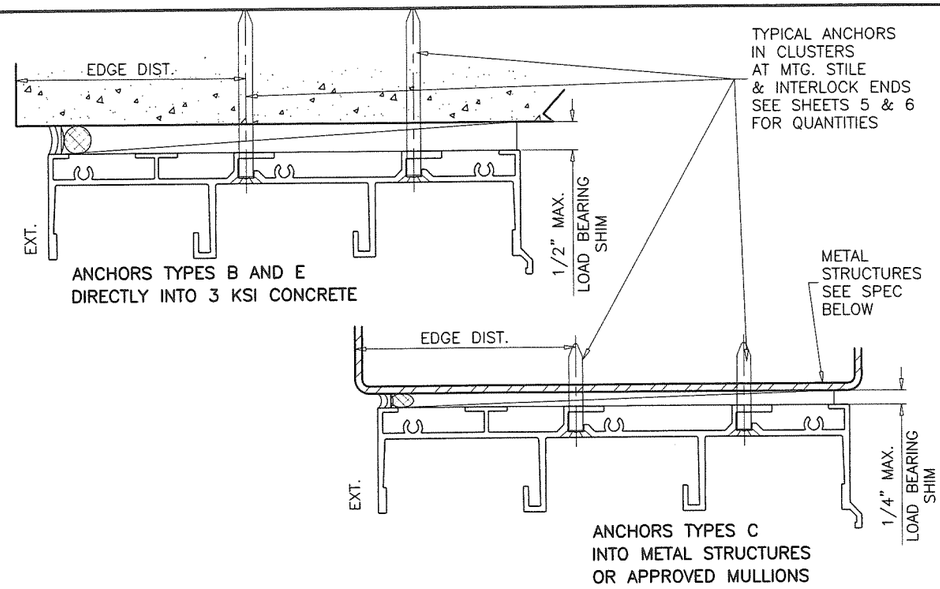

ANCHORS TYPES B AND E
DIRECTLY INTO 3 KSI CONCRETE

ANCHORS TYPES C
INTO METAL STRUCTURES
OR APPROVED MULLIONS

WOOD BUCKS AND METAL STRUCTURES NOT BY CGI WINDOWS MUST SUSTAIN LOADS IMPOSED BY GLAZING SYSTEM AND TRANSFER THEM TO THE BUILDING STRUCTURE.

TYPICAL ANCHORS: SEE ELEV. FOR SPACING

TYPE 'A'– 1/4" DIA. ULTRACON BY 'ELCO' (Fu=177 KSI, Fy=155 KSI)
INTO WOOD STRUCTURES
WITH 2" MIN. PENETRATION INTO WOOD (HEAD/JAMBS)
THRU 1BY OR 2BY WOOD BUCKS INTO CONC. OR BLOCKS
WITH 1–1/4" MIN. EMBED INTO CONCRETE (HEAD/JAMBS)
WITH 1–1/4" MIN. EMBED INTO BLOCKS (JAMBS)

TYPE 'B'– 1/4" DIA. ULTRACON BY 'ELCO' (Fu=177 KSI, Fy=155 KSI)
DIRECTLY INTO CONC. OR BLOCKS
2" MIN. EMBED INTO CONCRETE (HEAD/SILL/JAMBS)
2" MIN. EMBED INTO GROUT FILLED BLOCKS (JAMBS)

TYPE 'C'– #14 SMS OR SELF DRILLING SCREWS (GRADE 2 CRS)
INTO MIAMI–DADE COUNTY APPROVED MULLIONS
OR
INTO METAL STRUCTURES (HEAD/JAMBS)
(3) THREADS MIN. TO EXTEND BEYOND METAL THICKNESS
ALUMINUM: 1/8" THK. MIN. (6063–T5 MIN.)
STEEL: 1/8" THK. MIN. (Fy = 36 KSI MIN.)
(STEEL IN CONTACT WITH ALUMINUM TO BE PLATED OR PAINTED)

TYPE 'D'– 1/4" DIA HILTI KWIK–CON II (Fu=138 KSI, Fy=137 KSI)
INTO WOOD STRUCTURES
WITH 2" MIN. PENETRATION INTO WOOD (HEAD/JAMBS)
THRU 1BY OR 2BY WOOD BUCKS INTO CONC. OR BLOCKS
WITH 1–1/4" MIN. EMBED INTO CONCRETE (HEAD/JAMBS)
WITH 1–1/4" MIN. EMBED INTO BLOCKS (JAMBS)

TYPE 'E'– 1/4" DIA HILTI KWIK–CON II (Fu=138 KSI, Fy=137 KSI)
DIRECTLY INTO CONC. OR BLOCKS
WITH 2" MIN. EMBED INTO CONCRETE (HEAD/SILL/JAMBS)
WITH 2" MIN. EMBED INTO GROUT FILLED BLOCKS (JAMBS)

ANCHOR EDGE DISTANCES (UNLESS OTHERWISE NOTED)
INTO CONCRETE AND BLOCKS = 2–1/2" MIN.
INTO WOOD STRUCTURE = 1" MIN. (1/4" DIA. ANCHORS)
= 1–1/4" MIN. (5/16" DIA. ANCHORS)
INTO METAL STRUCTURE = 1/2" MIN.

WOOD AT HEAD OR JAMBS SG = 0.55 MIN.
CONCRETE AT HEAD, SILL OR JAMBS f'c = 3000 PSI MIN.
C–90 HOLLOW/FILLED BLOCK AT JAMBS f'm = 2000 PSI MIN.

TYPE 'AA'– 5/16" DIA. ULTRACON BY 'ELCO' (Fu=177 KSI, Fy=155 KSI)
INTO WOOD STRUCTURES
WITH 1–7/8" MIN. PENETRATION INTO WOOD (HEAD/JAMBS)
THRU 1BY OR 2BY WOOD BUCKS INTO CONC. OR BLOCKS
WITH 1–3/4" MIN. EMBED INTO CONCRETE (HEAD/JAMBS)
WITH 1–3/4" MIN. EMBED INTO GROUT FILLED BLOCKS (JAMBS)

TYPE 'BB'– 5/16" DIA. ULTRACON BY 'ELCO' (Fu=177 KSI, Fy=155 KSI)
DIRECTLY INTO CONC. OR BLOCKS
1–3/4" MIN. EMBED INTO CONCRETE (HEAD/SILL/JAMBS)
1–3/4" MIN. EMBED INTO GROUT FILLED BLOCKS (JAMBS)

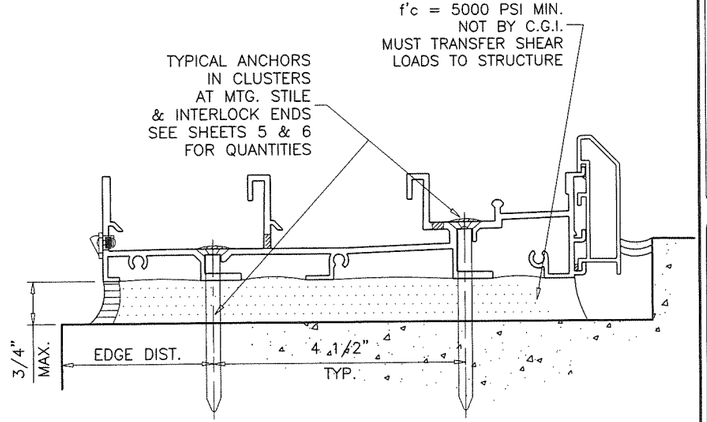

ANCHORS TYPES B & E
DIRECTLY INTO 3 KSI CONCRETE

PRODUCT REVIEWED
as complying with the Florida
Building Code
Acceptance No. 16-1108.05
Expiration Date 6/1/23
By [signature]
Mil and Shade Product Control

JAWAD AHMAD
LICENSE
No. 70592
Aug 22,2019
STATE OF
FLORIDA
PROFESSIONAL ENGINEER

AL-FAROOQ CORPORATION
ENGINEERS & PRODUCT DEVELOPMENT
9360 SUNSET DRIVE, SUITE 220
MIAMI, FLORIDA 33173 (C.A.N. 3538)
TEL. (305) 264-8100 FAX. (305) 262-6978

COMP–ANL\W09–58CGI

SERIES–560 ALUM SLIDING GLASS DOOR (L.M.I.)

CGI Windows and Doors, Inc.
3780 West 104th Street
Hialeah, FL. 33018
Tel. (305) 593–6590 Fax. (305) 593–6592

revisions:			
no	date	by	description
E	11.28.17		UPDATED TO 2017 FBC
F	03.14.18		REV. PER RER COMMENTS
G	04.24.18		REV. PER RER COMMENTS
H	07.29.19		NO CHANGE THIS SHEET

date: 11–10–09
scale: 3/8" = 1"
dr. by: TARIQ
chk. by:

drawing no. W09–58

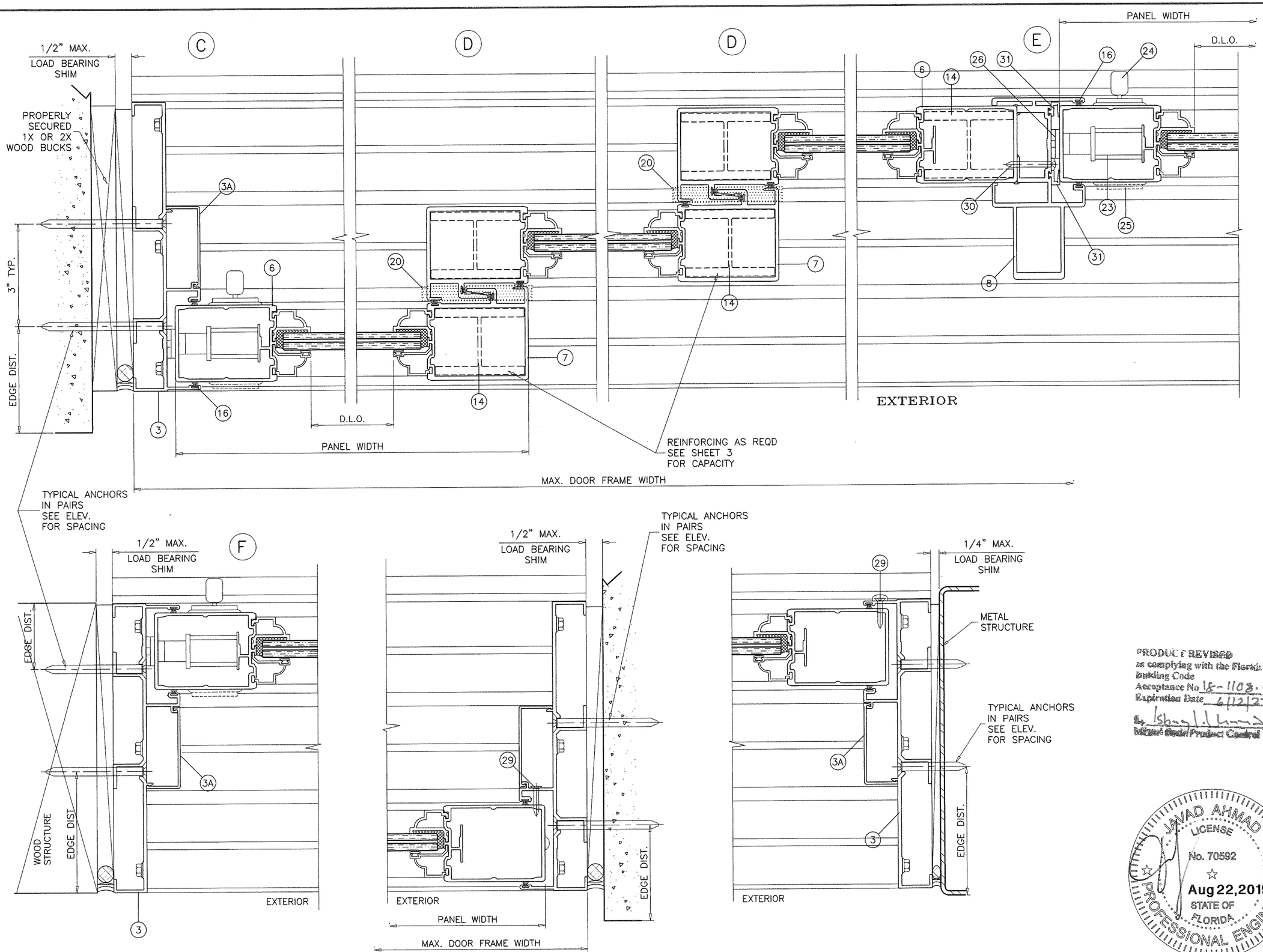

PRODUCT REVISED
as complying with the Florida Building Code
Acceptance No 18-1108.05
Expiration Date 6/12/23
By [signature]
Miami Dade Product Control

JAVAD AHMAD
LICENSE
No. 70592
Aug 22,2019
STATE OF FLORIDA
PROFESSIONAL ENGINEER

AL-FAROOQ CORPORATION
ENGINEERS & PRODUCT DEVELOPMENT
9360 SUNSET DRIVE, SUITE 220
MIAMI, FLORIDA 33173 (C.A.N. 3538)
TEL. (305) 264-8100 FAX. (305) 262-6978
COMP-ANL\W09-58CGI

SERIES-560 ALUM SLIDING GLASS DOOR (L.M.I.)

CGI Windows and Doors, Inc.
3780 West 104th Street
Hialeah, FL. 33018
Tel. (305) 593-6590 Fax. (305) 593-6592

revisions:

no	date	by	description
E	11.28.17		UPDATED TO 2017 FBC
F	03.14.18		REV. PER RER COMMENTS
G	04.24.18		REV. PER RER COMMENTS
H	07.29.19		NO CHANGE THIS SHEET

date: 11-10-09
scale: 3/8" = 1"
dr. by: TARIQ
chk. by:

drawing no.
W09-58

POCKET HOOK ANCHOR CAPACITY – PSF

ANCHORS TYPE	SUBSTRATE	MIN. EMBED.	MIN. EDGE DIST.	PANEL WIDTHS				
				36–1/4"	42–1/4"	48–1/4"	54–1/4"	60–1/4"
1/4" DIA. ULTRACONS BY 'ELCO' (Fu=177 KSI, Fy=155 KSI)	MASONRY	1–1/4"	1"	55.8	47.9	41.9	37.3	33.6
	CONCRETE	1–3/4"	1"	140.0	140.0	137.8	122.5	110.3
#14 SMS (GRADE 2 OR 5 CRS)	WOOD	1–3/4"	3/4"	140.0	140.0	131.0	116.5	104.9

ABOVE CHART IS FOR 12" TYP. ANCHOR SPACING
FOR 6" SPACING MULTIPLY CAPACITY X2.

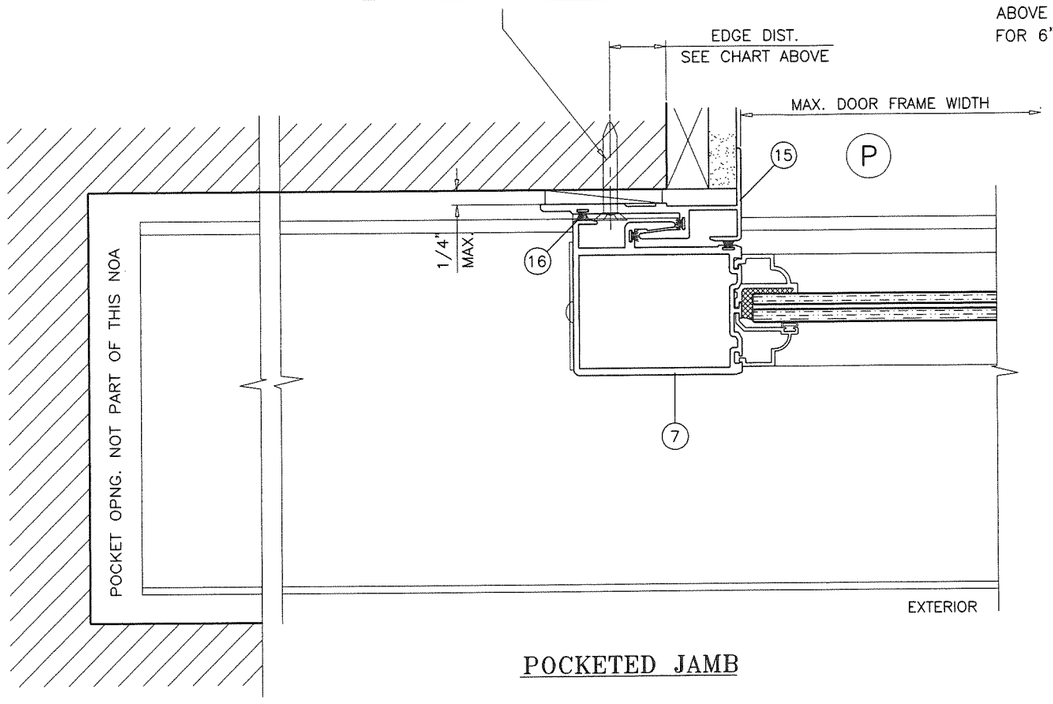

POCKETED JAMB

PRODUCT REVISED
as complying with the Florida
Building Code
Acceptance No. 18-1108.05
Expiration Date 6/12/23
By: Ishaq I. Ahmad
Miami-Dade Product Control

JAVAD AHMAD
LICENSE
No. 70592
Aug 22,2019
STATE OF
FLORIDA
PROFESSIONAL ENGINEER

AL-FAROOQ CORPORATION
ENGINEERS & PRODUCT DEVELOPMENT
9360 SUNSET DRIVE, SUITE 220
MIAMI, FLORIDA 33173 (C.A.N. 3538)
TEL. (305) 264-8100 FAX. (305) 262-6978

COMP–ANL\W09–58CGI

SERIES–560 ALUM SLIDING GLASS DOOR (L.M.I.)

CGI Windows and Doors, Inc.
3780 West 104th Street
Hialeah, FL. 33018
Tel. (305) 593–6590 Fax. (305) 593–6592

revisions:

no	date	by	description
E	11.28.17		UPDATED TO 2017 FBC
F	03.14.18		REV. PER RER COMMENTS
G	04.24.18		REV. PER RER COMMENTS
H	07.29.19		NO CHANGE THIS SHEET

date: 11–10–09
scale: 3/8" = 1"
dr. by: TARIQ
chk. by:

drawing no.
W09–58

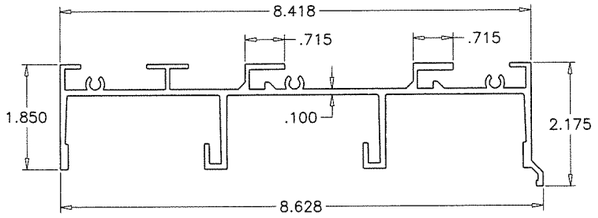

(1) FRAME HEAD

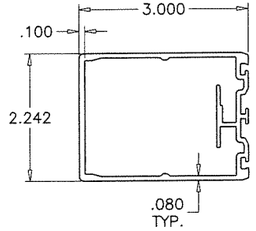

(6) JAMB/LOCK STILE

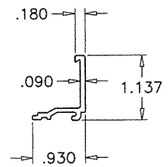

(12) INSUL. GLASS ADAPTER

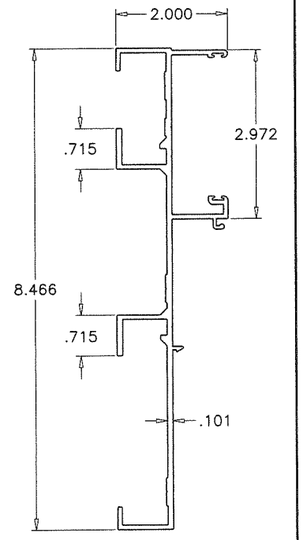

(3A) FRAME JAMB

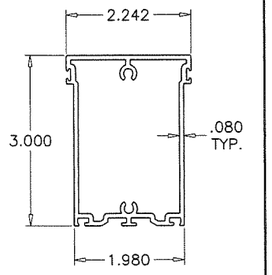

(4) TOP RAIL

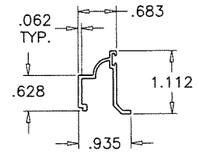

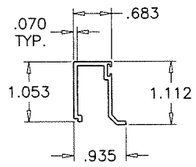

(10) (10A) GLAZING BEADS

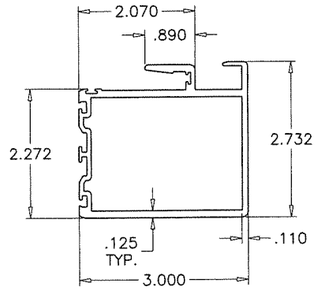

(7) INTERLOCK STILE

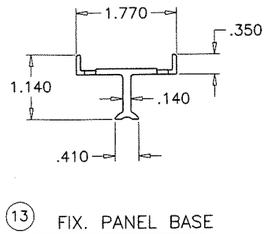

(13) FIX. PANEL BASE

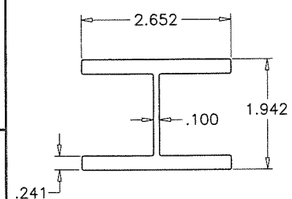

(14) STILE REINFORCING

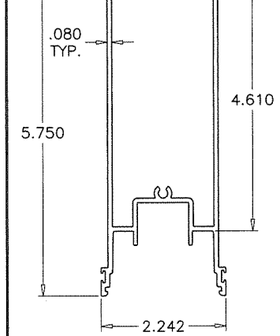

(5) BOTTOM RAIL

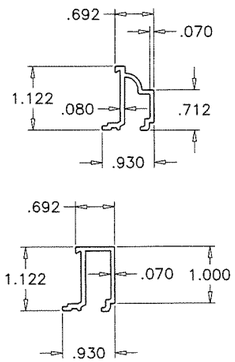

(11) (11A) GLASS ADAPTERS

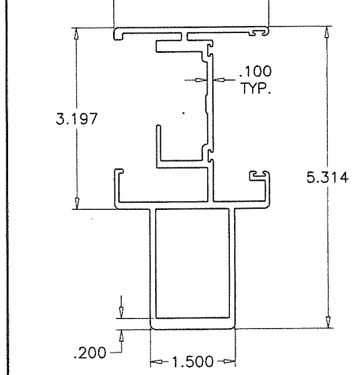

(8) ASTRAGAL STILE

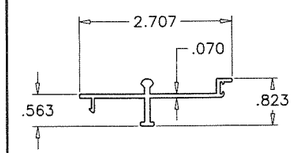

(16) TRACK INSERT

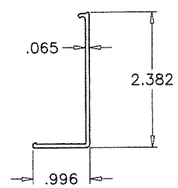

(17) JAMB COVER

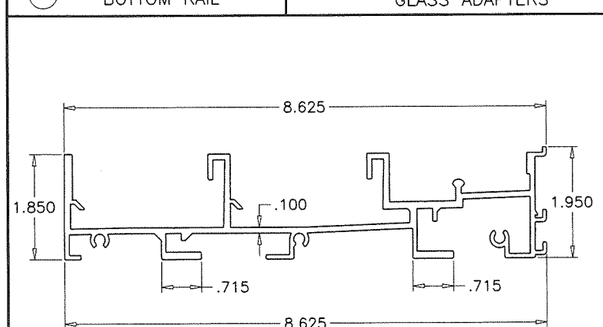

(2) FRAME SILL

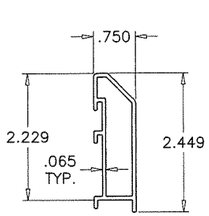

(9) SILL RISER (STANDARD)

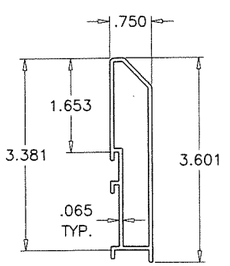

(9A) SILL RISER (HI-RISE)

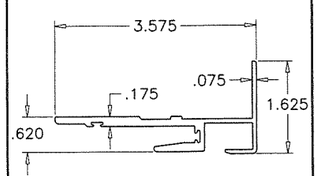

(15) POCKET DOOR HOOK

PRODUCT REVISED
as complying with the Florida
Building Code
Acceptance No. 18-1108.05
Expiration Date 6.12.23
By
Miami-Dade Product Control

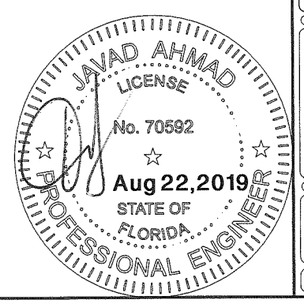

AL-FAROOQ CORPORATION
ENGINEERS & PRODUCT DEVELOPMENT
9360 SUNSET DRIVE, SUITE 220
MIAMI, FLORIDA 33173 (C.A.N. 3538)
TEL. (305) 264-8100 FAX. (305) 262-6978

COMP-ANL\W09-58CGI

SERIES-560 ALUM SLIDING GLASS DOOR (L.M.I.)

CGI Windows and Doors, Inc.
3780 West 104th Street
Hialeah, FL. 33018
Tel. (305) 593-6590 Fax. (305) 593-6592

revisions:

no	date	by	description
E	11.28.17		UPDATED TO 2017 FBC
F	03.14.18		NO CHANGE THIS SHEET
G	04.24.18		REV. PER RER COMMENTS
H	07.29.19		NO CHANGE THIS SHEET

date: 11-10-09
scale: 3/8" = 1"
dr. by: TARIQ
chk. by:

drawing no.
W09-58

sheet 10 of 13

ITEM #	PART #	QUANTITY	DESCRIPTION	MATERIAL	MANF./SUPPLIER/REMARKS
1	CGI–572	1	FRAME HEAD	6063–T6	–
2	CGI–573	1	FRAME SILL	6063–T6	–
2A	CGI–575	AS REQD.	TRACK INSERT	6063–T6	–
3	CGI–574	2	FRAME JAMB	6063–T6	–
3A	CGI–576	AS REQD.	JAMB COVER	6063–T5	–
4	CGI–555	1/ PANEL	TOP RAIL	6063–T6	–
5	CGI–556	1/ PANEL	BOTTOM RAIL	6063–T6	–
6	CGI–557	2/ PANEL	JAMB/LOCK STILE	6063–T6	–
7	CGI–558	AS REQD.	INTERLOCK	6063–T6	–
8	CGI–559	AS REQD.	ASTRAGAL STILE	6063–T6	–
9	CGI–553	AS REQD.	SILL RISER (STANDARD)	6063–T5	–
9A	CGI–553	AS REQD.	SILL RISER (HI–RISE)	6063–T5	–
10	CGI–561	AS REQD.	GLAZING BEAD (COLONIAL)	6063–T5	–
10A	CGI–563	AS REQD.	GLAZING BEAD (SQUARE)	6063–T5	–
11	CGI–562	AS REQD.	GLASS ADAPTER (COLONIAL)	6063–T5	–
11A	CGI–564	AS REQD.	GLASS ADAPTER (SQUARE)	6063–T5	–
12	CGI–565	AS REQD.	GLASS ADAPTER (INSUL. LAM. GLASS)	6063–T6	–
13	CGI–585	2/ FIX. PANEL	FIX. PANEL BASE, 2" LONG	6063–T5	ATTACHED WITH #10 X 1" PH PH TEKS
14	CGI–560	AS REQD.	STILE REINFORCING	6063–T6	LENGTH = DOOR HT. – 14"
15	CGI–577	AS REQD.	POCKET DOOR HOOK	6063–T6	–

16	VARIES	VARIES	WOOL PILE WEATHERSTRIPPING WITH FIN	PILE	ULTRAFAB OR EQUAL	.187 BASE X .290 TRI–FIN (USED HORIZONTALLY) .187 BASE X .320 SINGLE CENTER FIN (USED VERTICALLY)
17	CGI–382V	VARIES	GLAZING BEAD BULB	VINYL	CUSTOM EXTRUDED	DUROMETER 75±5, SHORE A
18	SILICONE	VARIES	STRUCTURAL SILICONE	RUBBER	GE 1200 OR DOW 995	
19	CGI–584	1	ANTI–LIFT BLOCK	GL REINF NYLON	CUSTOM CGI PART	ABOVE INTERLOCK ATTACHED W/ (2) #10X1" SMS
20	CGI–586	1	ADHESIVE BACKED PILE PAD (3.25"L X .44"W X .3"H)	PILE	ULTRAFAB OR EQUAL	AT BOTTOM OF EACH INTERLOCK
21	TA–51 OR TA–84	2/ MOV. PANEL	TANDEM S/S ROLLER	S/S	BUILDERS HRDW. OR EQUAL	ATTACHED WITH #10 X 1" PH PH TEKS
23	CH–200	1	M.S. COMMERCIAL HOOK BOLT LOCK (CH–200)	S/S MECH.	CUSTOM PART	INCLUDES CGI–580 FACE PLATE TRIM W/ (1) S/S KEEPER (CGI–581)
24	CH–107	1	BRASS THUMBTURN	BRASS/ZINC	CUSTOM PART	1 REQUIRED PER HOOK BOLT
25	CH–109	OPT.	BRASS KEYED EXTERIOR CYLINDER	BRASS/ZINC	CUSTOM PART	OPTIONAL PART
26	CGI–581	1	.850 X 3.875 S/S KEEPER	S/S	CUSTOM PART	ATTACHED W/ (3) #10 X 1" TRUSS HEAD SMS
27	SCREW (FRAME)	12	#12 X 1 1/4" HEX HEAD S/S SMS	S/S	VARIOUS	3 SCREWS PER FRAME CORNER
28	SCREW (PANEL)	8	#10 X 1 1/4" PAN HEAD S/S SMS	S/S	VARIOUS	2 SCREWS PER PANEL CORNER
29	SCREW	2	#8 X 1 1/2" FLAT HEAD TEKS S/S	S/S	VARIOUS	(2) PER FIXED PANEL AT MAXIMUM OF 24" FROM TOP & BOTTOM MOUNTED ON PLASTIC COVER
30	SCREW	VARIES	#10 X 1 1/2" PAN HEAD TEKS S/S	S/S	VARIOUS	AT 6" FROM ENDS AND 24" ON CENTER MAX.
31	CGI–599	VARIES	RUBBER SEAL	RUBBER/FOAM	CUSTOM PART	
32	SIDELITE JAMB CLIP	1/SCREW	3" LONG CLIP (AT "O" CONFIGURATION)	ALUM	CUSTOM PART	CONSISTS OF 1/8 X 3 1/8 X 3" LG PLATE GLUED TO 3/4 X 1 1/2 X 1/8 THK X 3" LG. TUBE
33	HI–FLO WEEPER	VARIES	WEEP HOLE AND COVER	NYLON	PEP	1 WEEP AND COVER AT 9" FROM ENDS AND AT CENTER LINE OF INTERLOCK OR ASTRAGAL
34	–	2/ LITE	SETTING BLOCKS	EPDM	–	DUROMETER 85±5 SHORE A
35	WS–578	AS REQD.	ADHESIVE BACKED PILE PAD (2.75"L X .3"W X .69"H)	PILE	ULTRAFAB OR EQUAL	AT HEAD INTERLOCK EXTERIOR SIDE
36	WS–597	AS REQD.	ADHESIVE BACKED PILE PAD (1.1"L X .54"W X .32"H)	PILE	ULTRAFAB OR EQUAL	AT SILL EXTERIOR SIDE

SEALANTS:

ALL FRAME AND PANEL JOINT, INSTALLATION SCREWS AND HEADS OF ANCHOR SCREWS AT SILL TO BE SEALED WITH WHITE/ALUM COLORED SILICONE.

PRODUCT REVIEWED
as complying with the Florida
Building Code
Acceptance No. 18-1108.05
Expiration Date 6/12/23
By: [signature]
Miami-Dade Product Control

JAVAD AHMAD
LICENSE
No. 70592
Aug 22,2019
STATE OF FLORIDA
PROFESSIONAL ENGINEER

AL-FAROOQ CORPORATION
ENGINEERS & PRODUCT DEVELOPMENT
9360 SUNSET DRIVE, SUITE 220
MIAMI, FLORIDA 33173 (C.A.N. 3538)
TEL. (305) 264-8100 FAX. (305) 262-6978

COMP–ANL\W09–58CGI

SERIES–560 ALUM SLIDING GLASS DOOR (L.M.I.)

CGI Windows and Doors, Inc.
3780 West 104th Street
Hialeah, FL. 33018
Tel. (305) 593–6590 Fax. (305) 593–6592

revisions:

no	date	by	description
E	11.28.17		UPDATED TO 2017 FBC
F	03.14.18		REV. PER RER COMMENTS
G	04.24.18		REV. PER RER COMMENTS
H	07.29.19		NO CHANGE THIS SHEET

date: 11–10–09
scale: 3/8" = 1"
dr. by: TARIQ
chk. by:

drawing no.
W09–58

sheet 11 of 13

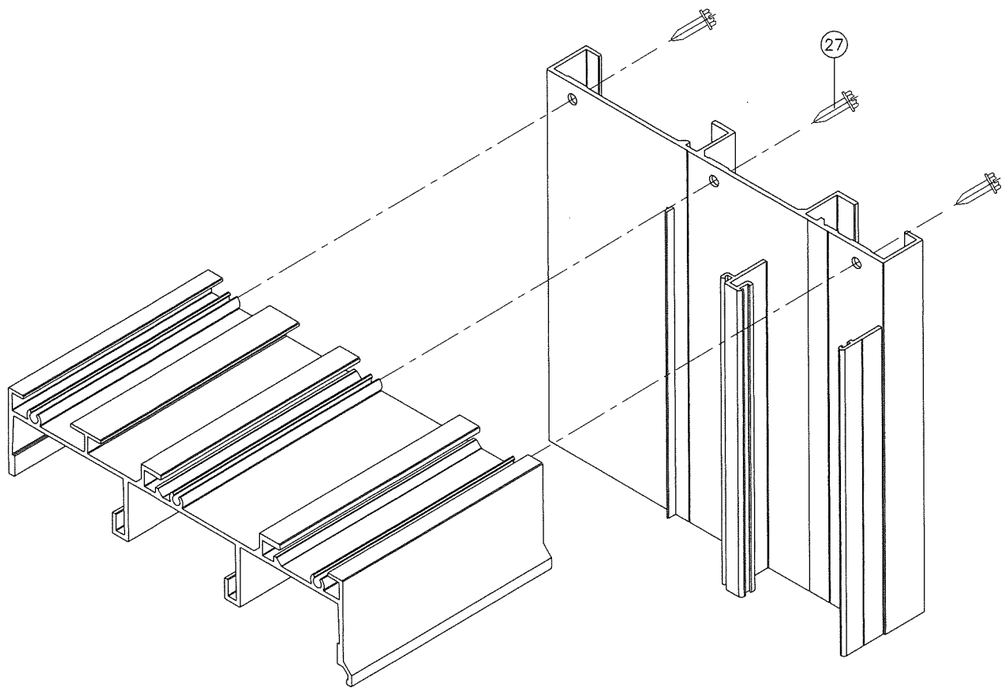

FRAME TOP CORNER

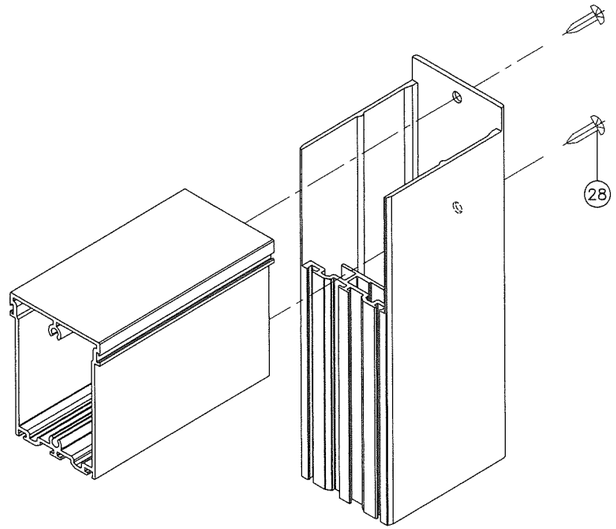

PANEL TOP CORNER

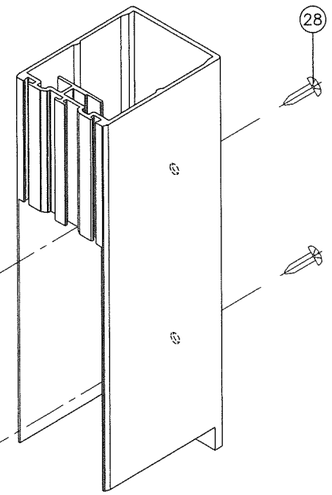

PANEL BOTTOM CORNER

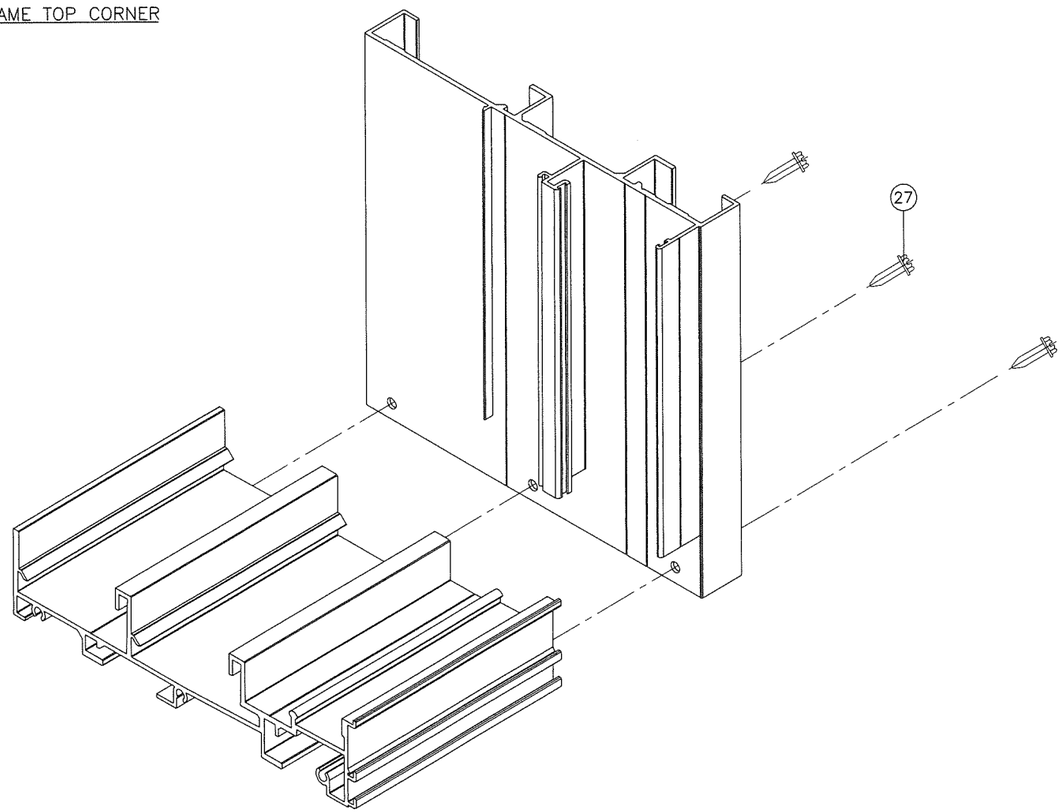

FRAME BOTTOM CORNER

PRODUCT REVIEWED
as complying with the Florida
Building Code
Acceptance No. 18-1108.05
Expiration Date 6/1/23
By: Ishaq I. Ahmad
My no' Study Product Control

JAVAD AHMAD
LICENSE
No. 70592
Aug 22,2019
STATE OF
FLORIDA
PROFESSIONAL ENGINEER

AL-FAROOQ CORPORATION
ENGINEERS & PRODUCT DEVELOPMENT
9360 SUNSET DRIVE, SUITE 220
MIAMI, FLORIDA 33173 (C.A.N. 3538)
TEL. (305) 264-8100 FAX. (305) 262-6978

COMP-ANL\W09-58CGI

SERIES-560 ALUM SLIDING GLASS DOOR (L.M.I.)

CGI Windows and Doors, Inc.
3780 West 104th Street
Hialeah, FL. 33018
Tel. (305) 593-6590 Fax. (305) 593-6592

revisions:

no	date	by	description
E	11.28.17		UPDATED TO 2017 FBC
F	03.14.18		NO CHANGE THIS SHEET
G	04.24.18		REV. PER RER COMMENTS
H	07.29.19		NO CHANGE THIS SHEET

date: 11-10-09
scale: 3/8" = 1"
dr. by: TARIQ
chk. by:

drawing no.
W09-58

sheet 12 of 13

MULLION LOAD CAPACITY – PSF		
DIMS.		2 X 10 X 1/8"
WIDTH (W) INCHES	LENGTH (L) INCHES	EXT.(+) INT.(–)
26–1/4	84	140.0
32–1/4		140.0
38–1/4		140.0
44–1/4		140.0
50–1/4		140.0
56–1/4		140.0
62–1/4		140.0
26–1/4	90	140.0
32–1/4		140.0
38–1/4		140.0
44–1/4		140.0
50–1/4		140.0
56–1/4		140.0
62–1/4		140.0
26–1/4	96	140.0
32–1/4		140.0
38–1/4		140.0
44–1/4		140.0
50–1/4		140.0
56–1/4		140.0
62–1/4		140.0
26–1/4	102	140.0
32–1/4		140.0
38–1/4		140.0
44–1/4		140.0
50–1/4		140.0
56–1/4		140.0
62–1/4		140.0
26–1/4	108	140.0
32–1/4		140.0
38–1/4		140.0
44–1/4		140.0
50–1/4		140.0
56–1/4		140.0
62–1/4		140.0
26–1/4	114	140.0
32–1/4		140.0
38–1/4		140.0
44–1/4		140.0
50–1/4		140.0
56–1/4		140.0
26–1/4	120	140.0
32–1/4		140.0
38–1/4		140.0
44–1/4		140.0
50–1/4		140.0
56–1/4		140.0

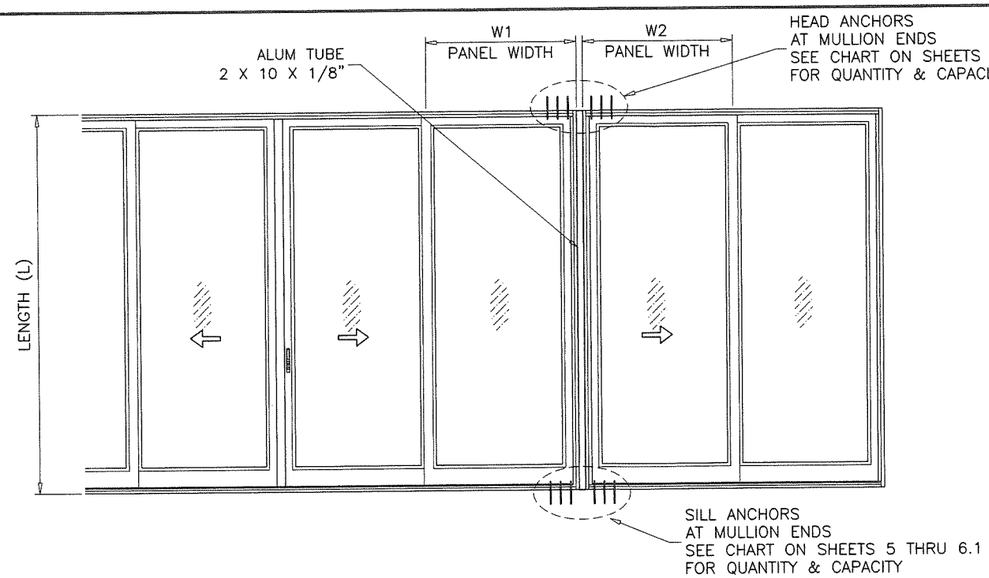

TYPICAL ELEVATIONS

SIDE BY SIDE S.G. DOOR

SIDE BY SIDE APPLIES TO TWO OR MORE DOORS

$$\text{WIDTH (W)} = \frac{W1 + W2}{2} + 2$$

W1 = SGD PANEL WIDTH
W2 = SGD PANEL WIDTH

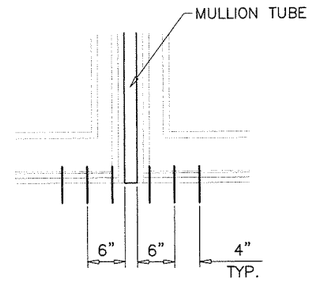

CLUSTER OF ANCHORS
HEAD/SILL

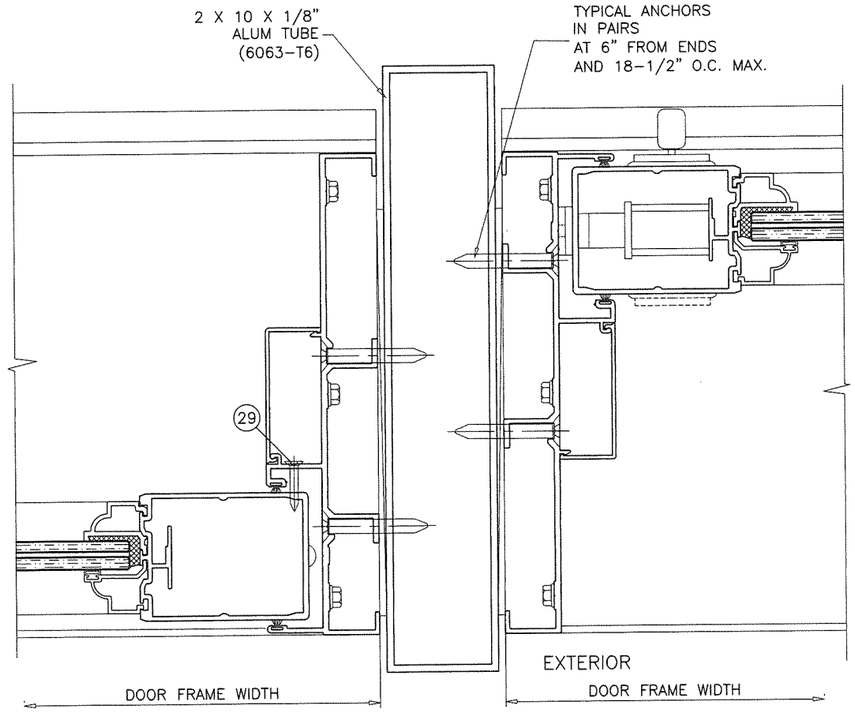

UNCLIPPED MULLION

NOTES:

1. USE CHART ON THIS SHEET FOR SIDE BY SIDE CONNECTION CAPACITY OF DOOR MULLION.
2. FOR SLIDING GLASS DOOR CAPACITY SEE SHEET 3.
3. USE CHART ON SHEETS 5 & 6 TO SELECT ANCHOR ARRANGEMENT AT MULLION ENDS.
4. LOWER VALUES FROM STEPS 1, 2 OR 3 WILL APPLY TO ENTIRE SYSTEM.

PRODUCT REVIEWED
as complying with the Florida
Building Code
Acceptance No. 18-1108.05
Expiration Date 6/12/23
By: Ishaq I. Chanda
Miami-Dade Product Control

JAVAD AHMAD
LICENSE
No. 70592
Aug 22,2019
STATE OF
FLORIDA
PROFESSIONAL ENGINEER

AL-FAROOQ CORPORATION
ENGINEERS & PRODUCT DEVELOPMENT
9360 SUNSET DRIVE, SUITE 220
MIAMI, FLORIDA 33173 (C.A.N. 3538)
TEL. (305) 264-8100 FAX. (305) 262-6978
COMP-ANL\W09-58CGI

SERIES-560 ALUM SLIDING GLASS DOOR (L.M.I.)

CGI Windows and Doors, Inc.
3780 West 104th Street
Hialeah, FL. 33018
Tel. (305) 593-6590 Fax. (305) 593-6592

revisions:			
no	date	by	description
E	11.28.17		UPDATED TO 2017 FBC
F	03.14.18		REV. PER RER COMMENTS
G	04.24.18		REV. PER RER COMMENTS
H	07.29.19		NO CHANGE THIS SHEET

date: 11–10–09
scale: 3/8" = 1"
dr. by: TARIQ
chk. by:

drawing no.
W09–58

sheet 13 of 13