MIAMI-DADE COUNTY
PRODUCT CONTROL SECTION
11805 SW 26 Street, Room 208
Miami, Florida 33175-2474
T (786) 315-2590 F (786) 315-2599
www.miamidade.gov/economy

DEPARTMENT OF REGULATORY AND ECONOMIC RESOURCES (RER)
BOARD AND CODE ADMINISTRATION DIVISION

NOTICE OF ACCEPTANCE (NOA)

PGT Industries Inc.
1070 Technology Drive,
North Venice, Fl. 34275

SCOPE:

This NOA is being issued under the applicable rules and regulations governing the use of construction materials. The documentation submitted has been reviewed and accepted by Miami-Dade County RER -Product Control Section to be used in Miami Dade County and other areas where allowed by the Authority Having Jurisdiction (AHJ).

This NOA shall not be valid after the expiration date stated below. The Miami-Dade County Product Control Section (In Miami Dade County) and/or the AHJ (in areas other than Miami Dade County) reserve the right to have this product or material tested for quality assurance purposes. If this product or material fails to perform in the accepted manner, the manufacturer will incur the expense of such testing and the AHJ may immediately revoke, modify, or suspend the use of such product or material within their jurisdiction. RER reserves the right to revoke this acceptance, if it is determined by Miami-Dade County Product Control Section that this product or material fails to meet the requirements of the applicable building code.

This product is approved as described herein, and has been designed to comply with the Florida Building Code, including the High Velocity Hurricane Zone.

DESCRIPTION: Series **"SGD-680"** Alum Sliding Glass Doors w/wo 90^0 corner (Reinf / Non-Reinf)-**Non-Impact**

APPROVAL DOCUMENT: Drawing No.**MD-680.0** (Former **8100-12 Rev C**), titled "Alum Sliding Glass Doors-Non-Impact", sheets 1 through 18 of 18, prepared by manufacturer, dated 11/14/17, signed and sealed by Lynn Miller, P.E., bearing the Miami-Dade County Product Control Renewal stamp with the Notice of Acceptance number and expiration date by the Miami-Dade County Product Control Section.

MISSILE IMPACT RATING: None: Approved Hurricane Protection devices, complying w/ FBC, as applicable are required.

Limitations:

1. Max Panels configuration is allowed per tables **1** thru **3**, not to exceed **375.47 ft²** frame area. The inside/outside 90^0 corner units are allowed per tables **1** thru **3** with in the max frame area.
2. See sheets **7, 8** & **9** for Design Pressure (DP), glass type, sill type for positive DP limit, applicable reinforcement and anchorage quantity requirements. See sheet **12** for glass options. See sheets **13** thru **15** for anchors lay out at tracks and corners. See exterior Pocket installation & anchor details in sheet **6**.
3. Pockets wall, cavity are not part of this approval. Exterior Pocket wall & applicable Egress requirement to be reviewed by Building official.

LABELING: Each unit shall bear a permanent label with the manufacturer's name or logo, city, state and series and following statement: "Miami-Dade County Product Control Approved", noted herein.

RENEWAL of this NOA shall be considered after a renewal application has been filed and there has been no change in the applicable building code negatively affecting the performance of this product.

TERMINATION of this NOA will occur after the expiration date or if there has been a revision or change in the materials, use, and/or manufacture of the product or process. Misuse of this NOA as an endorsement of any product, for sales, advertising or any other purposes shall automatically terminate this NOA. Failure to comply with any section of this NOA shall be cause for termination and removal of NOA.

ADVERTISEMENT: The NOA number preceded by the words Miami-Dade County, Florida, and followed by the expiration date may be displayed in advertising literature. If any portion of the NOA is displayed, then it shall be done in its entirety.

INSPECTION: A copy of this entire NOA shall be provided to the user by the manufacturer or its distributors and shall be available for inspection at the job site at the request of the Building Official.

This NOA **renews NOA #17-0420.11** and consists of this page 1 and evidence pages E-1, E-2 & E-3, as well as approval document mentioned above.

The submitted documentation was reviewed by **Ishaq I. Chanda, P.E.**

MIAMI-DADE COUNTY APPROVED
2/13/19

NOA No. 19-0130.02
Expiration Date: March 18, 2024
Approval Date: February 21, 2019

NOTICE OF ACCEPTANCE: EVIDENCE SUBMITTED

1. Evidence submitted under previous approvals

A. DRAWINGS

1. Manufacturer's die drawings and sections (submitted under files below).
2. Drawing No.**8100-12 Rev C**, titled "Alum Sliding Glass Doors-Non-Impact", sheets 1 through 20 of 20, prepared by manufacturer, dated 08-22-07 and last revised on 06/08/16, signed and sealed by Lynn Miller, P.E.

B. TESTS

1. REF Test report on 1) Uniform Static Air Pressure Test, per FBC, TAS 202-94
   2) Large Missile Impact Test per FBC, TAS 201-94
   3) Cyclic Wind Pressure Loading per FBC, TAS 203-94

   Along with marked-up drawings and installation diagram of Aluminum Sliding Glass Doors (w/ TPS, Super, Cardinal & Duraseal Spacers), prepared by Fenestration Testing Laboratory, Inc., Test Reports No(s) **FTL-8717, FTL-8970** and **FTL-8968**, dated 02/15/16, 06/07/16 and 06/20/16, all signed & sealed by Idalmis Ortega, P.E.
2. Test reports on: 1) Air Infiltration Test, per FBC, TAS 202-94
   2) Uniform Static Air Pressure Test, Loading per FBC TAS 202-94
   3) Water Resistance Test, per FBC, TAS 202-94 (see sheet 3)
   4) Large Missile Impact Test per FBC, TAS 201-94
   5) Cyclic Wind Pressure Loading per FBC, TAS 203-94
   6) Forced Entry Test, per FBC 2411 3.2.1, TAS 202-94

   Along with marked–up drawings and installation diagram of Aluminum SGD, prepared by Architectural Testing, Inc., Test Report No. **ATI–8124.01–401–18**, dated 11/13/2008, signed and sealed by Joseph A. Reed, P.E.

   Along with marked–up drawings and installation diagram of Aluminum SGD, prepared by Fenestration Testing Laboratory, Inc., Test Reports No(s) **FTL–5618**, dated 06/21/2008 and **FTL–5619,** both signed and sealed by Carlos S. Rionda, P. E. (submitted under files **# 15-0609.11, #14-0123.09 /#11-1018.13 / # 08-1202.12)**

C. CALCULATIONS (submitted under file #**15-0106.07**)

1. Anchor verification calculations and structural analysis dated 05/29/15, complying with FBC-214 (**5th** Edition), prepared by PGT, signed and sealed by Lynn Miller, P.E.
2. Glazing complies with ASTME-1300-02 &-04.

D. QUALITY ASSURANCE

1. Miami Dade Department of Regulatory and Economic Resources (RER).

E. MATERIAL CERTIFICATIONS

1. None.

F. STATEMENTS (submitted under file #**15-0106.07**)

1. Statement letter of conformance to FBC 2014(5th edition) and letter of no financial interest, prepared by PGT, dated 05/29/15, signed and sealed by Lynn Miller, P.E.
2. Letter of lab compliance, part of the above test reports.

Ishaq I. Chanda

Ishaq I. Chanda, P.E.
Product Control Unit Supervisor
NOA No. 19-0130.02
Expiration Date: March 18, 2024
Approval Date: February 21, 2019

NOTICE OF ACCEPTANCE: EVIDENCE SUBMITTED

G. OTHER

1. This NOA **revises NOA # 15-0106.07**, expiring 03/18/2019.
2. Test proposal # 16-0152 dated 03/09/16 approved by RER and Test proposals No(s) **07-3108** and **07-2583** approved by BCCO.
3. AAMA's Technical Paper for SGD & Bi-fold doors referenced to FBC 2014 (5th edition).

2. Evidence submitted under previous approvals

A. DRAWINGS

1. Drawing No.**MD-680.0** (Former **8100-12 Rev C**), titled "Alum Sliding Glass Doors-Non-Impact", sheets 1 through 18 of 18, prepared by manufacturer, dated 11/14/17, signed and sealed by Lynn Miller, P.E.

B. TESTS

1. References test reports FTL 8374 and FTL 7825 per TAS 202-94.

C. CALCULATIONS

1. Anchor verification calculations and structural analysis dated 04/18/17 and revised on 08/11/17, complying with FBC-2017 (**6th** Edition), prepared by PGT, signed and sealed by Lynn Miller, P.E.

D. QUALITY ASSURANCE

1. Miami Dade Department of Regulatory and Economic Resources (RER).

E. MATERIAL CERTIFICATIONS

1. None.

F. STATEMENTS

1. Statement letters of conformance to FBC 2017(**6th** Edition), dated 04/18/17, prepared, signed & sealed by Lynn Miller, P. E.

G. OTHER

1. This NOA **revises NOA # 16-0629.05**, expiring 03/18/19.

3. New Evidence submitted

A. DRAWINGS

1. Drawing No.**MD-680.0** (Former **8100-12 Rev C**), titled "Alum Sliding Glass Doors-Non-Impact", sheets 1 through 18 of 18, prepared by manufacturer, dated 11/14/17, signed and sealed by Lynn Miller, P.E.

Ishaq I. Chanda

Ishaq I. Chanda, P.E.
Product Control Unit Supervisor
NOA No. 19-0130.02
Expiration Date: March 18, 2024
Approval Date: February 21, 2019

NOTICE OF ACCEPTANCE: EVIDENCE SUBMITTED

B. TESTS

1. None.

C. CALCULATIONS

1. None.

D. QUALITY ASSURANCE

1. Miami Dade Department of Regulatory and Economic Resources (RER).

E. MATERIAL CERTIFICATIONS

1. None.

F. STATEMENTS

1. Statement letters of conformance to FBC 2017(**6th** Edition), dated 01/23/19, prepared, signed & sealed by Lynn Miller, P. E.

G. OTHER

1. This NOA **renews NOA # 17-0420.11**, expiring 03/18/19.

Ishaq I. Chanda

Ishaq I. Chanda, P.E.
Product Control Unit Supervisor
NOA No. 19-0130.02
Expiration Date: March 18, 2024
Approval Date: February 21, 2019

SERIES 680, NON-IMPACT RESISTANT SLIDING GLASS DOOR, INCLUDING EXTERIOR POCKETS & 90° CORNER

GENERAL NOTES

1) GLAZING TYPE OPTIONS: SEE TABLE B, THIS SHEET & GLAZING DETAILS ON SHEET 12.

2) DESIGN PRESSURES:
A. NEGATIVE DESIGN LOADS BASED ON TESTED PRESSURE AND GLASS TABLES ASTM E1300.
B. POSITIVE DESIGN LOADS BASED ON WATER TEST PRESSURE AND GLASS TABLES ASTM E1300.
C. DESIGN LOADS ARE BASED ON ALLOWABLE STRESS DESIGN, ASD.

3) ANCHORAGE: THE 33-1/3% STRESS INCREASE HAS NOT BEEN USED IN THE DESIGN OF THIS PRODUCT. MATERIALS, INCLUDING BUT NOT LIMITED TO STEEL SCREWS, THAT COME INTO CONTACT WITH OTHER DISSIMILAR MATERIALS SHALL MEET THE REQUIREMENTS OF THE CURRENT FLORIDA BUILDING CODE.

4) MIAMI-DADE COUNTY APPROVED SHUTTERS ARE REQUIRED IN MIAMI-DADE COUNTY AND WHERE IMPACT RESISTANCE IS REQUIRED.

5) INSTALLATION SCREWS, FRAME SPLICES, FRAME AND PANEL CORNERS TO BE SEALED WITH NARROW JOINT SEALANT.

6) REFERENCES: ELCO ULTRACON, CRETEFLEX AND AGGREGATOR NOA'S, ANSI/AF&PA NDS FOR WOOD CONSTRUCTION AND ADM, ALUMINUM DESIGN MANUAL.

7) THIS PRODUCT HAS BEEN DESIGNED & TESTED TO COMPLY WITH THE REQUIREMENTS OF THE CURRENT FLORIDA BUILDING CODE, INCLUDING THE HIGH VELOCITY HURRICANE ZONE (HVHZ).

8) DOOR SIZES MUST BE VERIFIED FOR COMPLIANCE WITH EGRESS REQUIREMENTS PER THE CURRENT FLORIDA BUILDING CODE, AS APPLICABLE BY THE AUTHORITY HAVING JURISDICTION (AHJ).

9) APPLICABLE TEST REPORTS: FTL-5618, 5619, 8374, 7825 & ATI-81241.01-401-18.

ANCHOR NOTES

1) FOR CONCRETE/CMU SUBSTRATE APPLICATIONS IN MIAMI-DADE COUNTY, USE ONLY MIAMI-DADE COUNTY APPROVED ANCHORS. SEE TABLE A ON THIS SHEET FOR EMBEDMENT, EDGE DISTANCE AND SUBSTRATE REQUIREMENTS.

2) FOR OTHER SUBSTRATE APPLICATIONS SEE TABLE A ON THIS SHEET.

3) WOOD BUCKS DEPICTED AS 1X ARE LESS THAN 1-1/2" THICK. PROPERLY SECURED, 1X WOOD BUCKS ARE OPTIONAL IF UNIT IS INSTALLED DIRECTLY TO SOLID CONCRETE OR CMU. WOOD BUCKS DEPICTED AS 2X ARE 1-1/2" THICK OR GREATER. 1X AND 2X BUCKS (WHEN USED) SHALL BE DESIGNED TO PROPERLY TRANSFER LOADS TO THE STRUCTURE. BUCK DESIGN AND INSTALLATION IS THE RESPONSIBILITY OF THE ENGINEER OR ARCHITECT OF RECORD & TO BE REVIEWED BY THE BUILDING OFFICIAL.

4) METAL SUBSTRATE TO MEET MIN. STRENGTH AND THICKNESS REQUIREMENTS PER CURRENT FLORIDA BUILDING CODE AND TO BE REVIEWED BY THE AUTHORITY HAVING JURISDICTION .

5) IF SILL IS TIGHT TO SUBSTRATE, GROUT OR OTHER MATERIAL IS NOT REQUIRED. IF USED, NON-SHRINK, NON-METALLIC GROUT, MAX. 1/4" THICK & 3400 PSI MIN., (DONE BY OTHERS) MUST FULLY SUPPORT THE ENTIRE LENGTH OF THE SILL THAT IS NOT TIGHT TO THE SUBSTRATE, AND TRANSFER SHEAR LOAD TO SUBSTRATE. IF SUBSTRATE IS WOOD, 30# FELT PAPER OR MASTIC IS REQUIRED BETWEEN THE GROUT AND WOOD SUBSTRATE, OR AS APPROVED BY THE AUTHORITY HAVING JURISDICTION.

TABLE A:

Anchor Group	Anchor Type	Frame Member	Substrate	Min. Edge Distance	Min. O.C. Distance	Min. Embedment or Metal Thickness
A	#12 410 SS SMS (min. of 3 threads beyond metal substrate)	All	Southern Pine (SG = 0.55)	9/16"	7/8"	1-3/8"
			6063-T5 Aluminum	3/8"	9/16"	0.063" (see note 5)
			A36 Steel	3/8"	9/16"	0.050"
			Gr. 33 Steel Stud	3/8"	9/16"	0.045" (18 Ga)
	1/4" Elco Aggre-Gator® F_y=57 ksi, F_u=96 ksi	All	Concrete (min. 2.22 ksi)	1-1/2"	3"	1-3/8"
		Jamb / P-hook	Filled Block (ASTM C90)	2"	3"	2"
		Jamb / P-hook	Hollow Block (ASTM C90)	2"	3"	1-1/4"
		All	Southern Pine (SG = 0.55)	1"	1"	1-3/8"
B	#12 Steel SMS (Gr. 5) (min. of 3 threads beyond metal substrate)	All	Southern Pine (SG = 0.55)	9/16"	7/8"	1-3/8"
			6063-T5 Aluminum	3/8"	9/16"	0.063" (see note 5)
			A36 Steel	3/8"	9/16"	0.050"
			Gr. 33 Steel Stud	3/8"	9/16"	0.045" (18 Ga)
C	1/4" Elco UltraCon® F_y=155 ksi, F_u=177 ksi	All	Concrete (min. 2.85 ksi)	1"	4"	1-3/8"
		Jamb / P-hook	Hollow Block (ASTM C90)	1"	6"	1-1/4"
D	1/4" Elco UltraCon® F_y=155 ksi, F_u=177 ksi	All	Concrete (min. 2.85 ksi)	2-1/2"	4"	1-3/8"
		Jamb / P-hook	Filled Block (ASTM C90)	2-1/2"	4"	1-3/4"
		Jamb / P-hook	Hollow Block (ASTM C90)	2-1/2"	6"	1-1/4"
	1/4" 410 SS Elco CreteFlex® F_y=127.4 ksi, F_u=189.7 ksi	Head / Sill	Concrete (min. 3.35 ksi)	1"	4"	1-3/4"
		Jamb / P-hook	Concrete (min. 3.35 ksi)	1"	6"	1-3/4"
		Jamb / P-hook	Hollow Block (ASTM C90)	1-3/4"	6"	1-1/4"
		All	Southern Pine (SG = 0.55)	1"	1"	1-3/8"

1) WHERE SUBSTRATE CONDITIONS REQUIRE ANCHORAGE FROM MORE THAN ONE OF THE ANCHOR GROUPS ABOVE, CHOOSE THE ANCHOR GROUP OF THE LOWEST LETTER FOR ALL TABLES IN THIS APPROVAL.
2) ALL ANCHOR HEAD TYPES ARE APPLICABLE.
3) FOR STEEL STUDS, MIN. FU = 45 KSI, MIN FY = 33 KSI.
4) FILLED BLOCK VALUES MAY ALSO BE USED IN HOLLOW BLOCK APPLICATIONS.
5) ALUMINUM SUBSTRATES AT POCKET TO BE MIN. 1/8"

PRODUCT RENEWED
as complying with the Florida Building Code
Acceptance No. 19-0130.02
Expiration Date MAR. 18, 2024
By Ishaq I. Chand
Miami Dade Product Control

PRODUCT REVISED
as complying with the Florida Building Code
Acceptance No. 17-0420.11
Expiration Date MAR. 18, 2019
By Ishaq I. Chand
Miami Dade Product Control

TABLE B: SEE DETAILS ON SHEET 12

Glass Type	Description (Listed from Exterior to Interior)
1	3/16" Tempered glass
2	7/8" I.G.: 3/16" Tempered Glass + 1/2" Air Space + 3/16" Tempered Glass
3	1/4" Tempered glass
4	7/8" I.G.: 1/4" Tempered Glass + 3/8" Air Space + 1/4" Tempered Glass

ANTHONY LYNN MILLER
LICENSE
No. 58705
11/14/17
STATE OF FLORIDA
PROFESSIONAL ENGINEER

A. LYNN MILLER, P.E.
P.E.# 58705

CODES / STANDARDS USED:

- 2017 FLORIDA BUILDING CODE (FBC), 6TH EDITION
- 2014 FLORIDA BUILDING CODE (FBC), 5TH EDITION
- ASTM E1300-09
- ANSI/AF&PA NDS-2015 FOR WOOD CONSTRUCTION
- ALUMINUM DESIGN MANUAL, ADM-2015
- AISI S100-12
- AISC 360-10

IMPACT RATING
NOT RATED FOR IMPACT RESISTANCE

DESIGN PRESSURE RATING
SEE TABLES 1-3 & C1-C3 ON SHEETS 7-9

Title	ALUMINUM SLIDING GLASS DOOR NOA (NI)			Date	04/04/17
Desc.	GENERAL NOTES			Drawn By	J ROSOWSKI
Rev.				Rev. Date	
Series	SGD-680	Scale NTS	Sheet 1 OF 18	DWG No. MD-680.0	Rev. No.

1070 TECHNOLOGY DR
N. VENICE, FL 34275
(941)-480-1600

CERT. OF AUTH. #29296

COPYRIGHT © 2017
PGT INDUSTRIES, INC.
ALL RIGHTS RESERVED

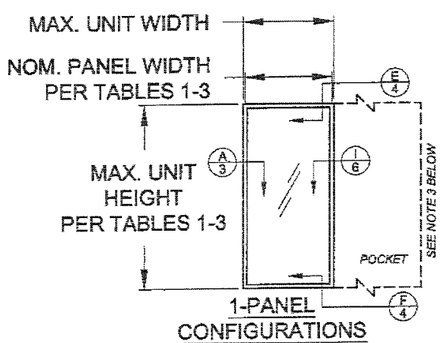

1-PANEL CONFIGURATIONS

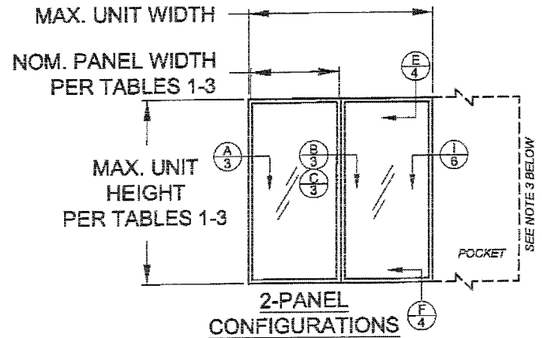

2-PANEL CONFIGURATIONS

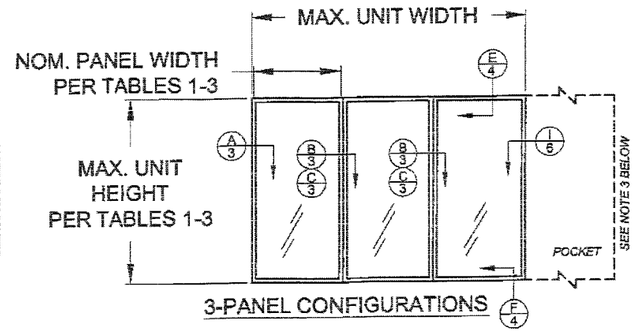

3-PANEL CONFIGURATIONS

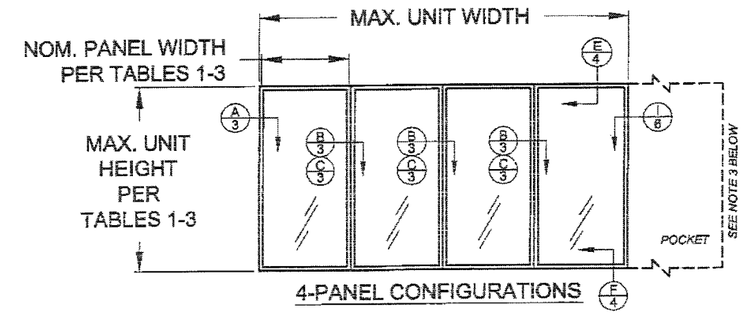

4-PANEL CONFIGURATIONS

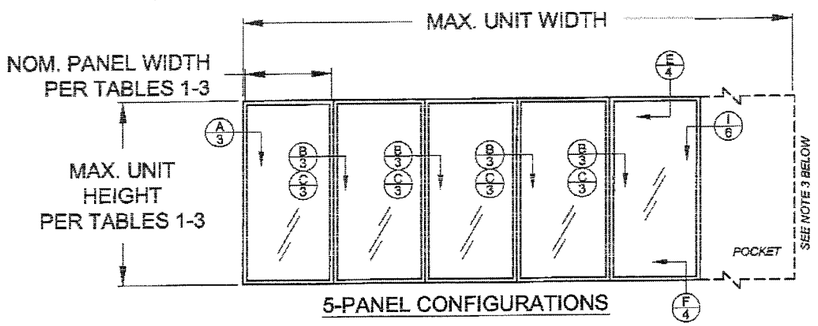

5-PANEL CONFIGURATIONS

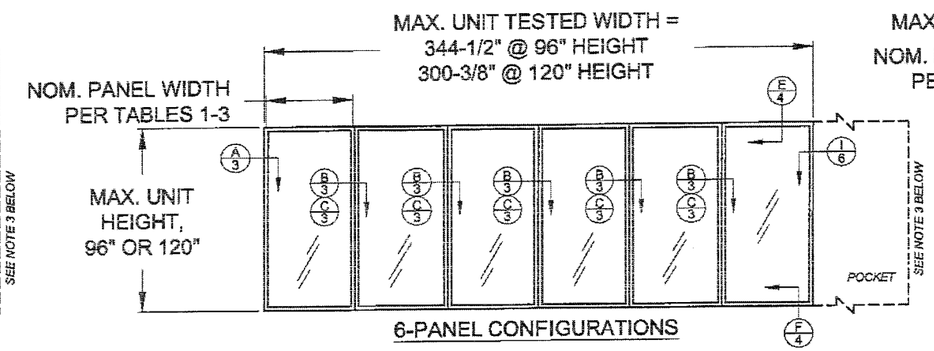

6-PANEL CONFIGURATIONS

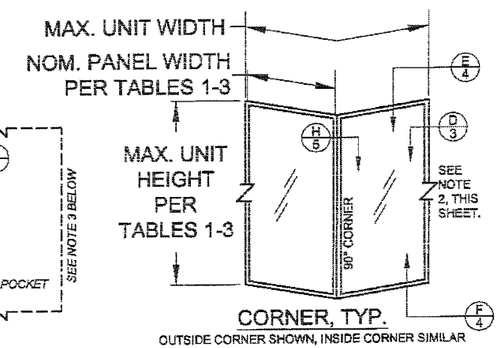

CORNER, TYP.

OUTSIDE CORNER SHOWN, INSIDE CORNER SIMILAR

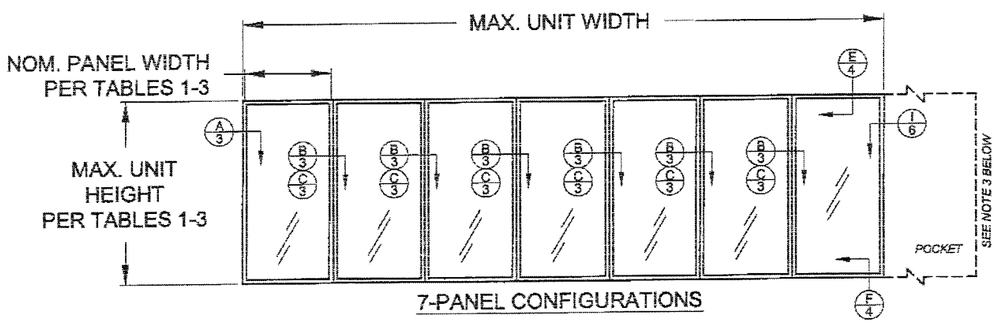

7-PANEL CONFIGURATIONS

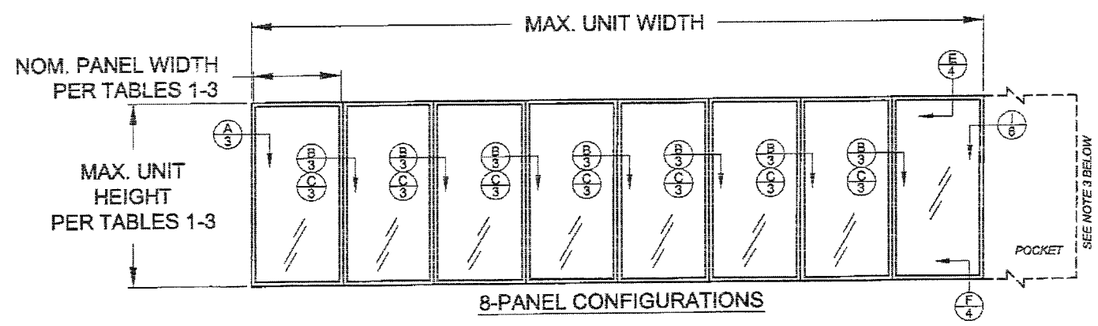

8-PANEL CONFIGURATIONS

CONFIGURATIONS NOTES:

1) ALL CONFIGURATIONS SHOWN ARE ALSO AVAILABLE AS POCKET CONFIGURATIONS AT EITHER OR BOTH JAMB LOCATIONS. EXAMPLE: 4-PANEL XXXX IN POCKET (p) CONFIGURATION CAN BE pXXXXp, pXXXX OR XXXXp. OXXX IN POCKET CONFIGURATION CAN BE OXXXp.

2) 90° CORNER CONFIGURATIONS ARE A COMBINATION OF ANY 2 STRAIGHT CONFIGURATIONS.

3) POCKET WALL OR CAVITY IS NOT PART OF THIS APPROVAL AND IS TO BE DESIGNED BY OTHERS AND REVIEWED BY THE AUTHORITY HAVING JURISDICTION.

4) FOR NOM. PANEL WIDTH, SEE TABLES 1-3.

5) MAX. ALLOWABLE FRAME SQUARE FOOTAGE = 375.47 FT²

"X" = OPERABLE PANEL
"O" = INOPERABLE PANEL
"p" = POCKET

DLO WIDTH = NOM. PANEL WIDTH - 7.875"
DLO HEIGHT (STD. BOT. RAIL, #22) = DOOR UNIT HEIGHT - 13.47"
DLO HEIGHT (TALL BOT. RAIL, #23) = DOOR UNIT HEIGHT - 17.29"
PANEL HEIGHT = DOOR UNIT HEIGHT - 2.25"

DETAIL LETTER
X
#
SHEET NUMBER

Title	ALUMINUM SLIDING GLASS DOOR NOA (NI)			Date	04/04/17
Desc.	CONFIGURATIONS			Drawn By	J ROSOWSKI
Rev.				Rev. Date	
Series	SGD-680	Scale NTS	Sheet 2 OF 18	DWG No. MD-680.0	Rev. No.

1070 TECHNOLOGY DR
N. VENICE, FL 34275
(941)-480-1600
CERT. OF AUTH. #29296

COPYRIGHT © 2017
PGT INDUSTRIES, INC.
ALL RIGHTS RESERVED

PRODUCT RENEWED
as complying with the Florida Building Code
Acceptance No. 19-0130.02
Expiration Date 3/18/24
By Ishay I. Chaudt
Miami Dade Product Control

PRODUCT REVISED
as complying with the Florida Building Code
Acceptance No. 17-0420.11
Expiration Date 3/18/19
By Ishay I. Chaudt
Miami Dade Product Control

ANTHONY LYNN MILLER
LICENSE
No. 58705
11/14/17
STATE OF FLORIDA
PROFESSIONAL ENGINEER

A. LYNN MILLER, P.E.
P.E.# 58705

PGT

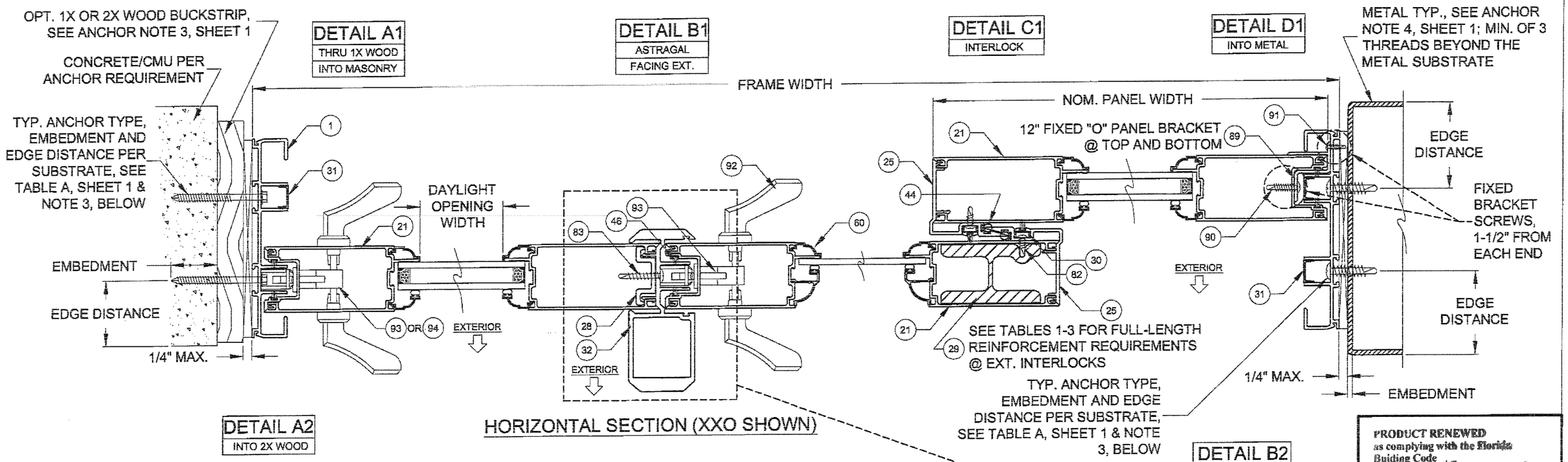

NOTES
1) DETAILS APPLY TO 2, 3 AND 4 TRACK CONFIGURATIONS. SEE SHEETS 13-15 FOR ANCHOR LOCATIONS & SPACING FOR EACH TRACK CONFIGURATION.
2) REFER TO ANCHOR NOTES, SHEET 1.
3) FOR ANCHOR QUANTITIES, SEE TABLES 1-3.
4) ALL REINFORCEMENTS ARE APPROXIMATELY THE FULL LENGTH OF THE EXTRUSION.
5) FOR DAYLIGHT OPENING (DLO) FORMULAS, SEE SHEET 2.

Title	ALUMINUM SLIDING GLASS DOOR NOA (NI)	Date	04/04/17
Desc.	INSTALLATION, HORIZONTAL X-SECT.	Drawn By	J ROSOWSKI
Rev.		Rev. Date	
Series	SGD-680	Scale	NTS
Sheet	3 OF 18	DWG No.	MD-680.0
Rev. No.			

1070 TECHNOLOGY DR
N. VENICE, FL 34275
(941)-480-1600
CERT. OF AUTH. #29296

COPYRIGHT © 2017
PGT INDUSTRIES, INC.
ALL RIGHTS RESERVED

PRODUCT RENEWED
as complying with the Florida Building Code
Acceptance No 19-0130.02
Expiration Date 3/15/24
By Miami Dade Product Control

PRODUCT REVISED
as complying with the Florida Building Code
Acceptance No 17-0426.11
Expiration Date 3/18/19
By Miami Dade Product Control

ANTHONY LYNN MILLER
LICENSE
No. 58705
11/14/17
STATE OF FLORIDA
PROFESSIONAL ENGINEER

A. LYNN MILLER, P.E.
P.E.# 58705

PGT

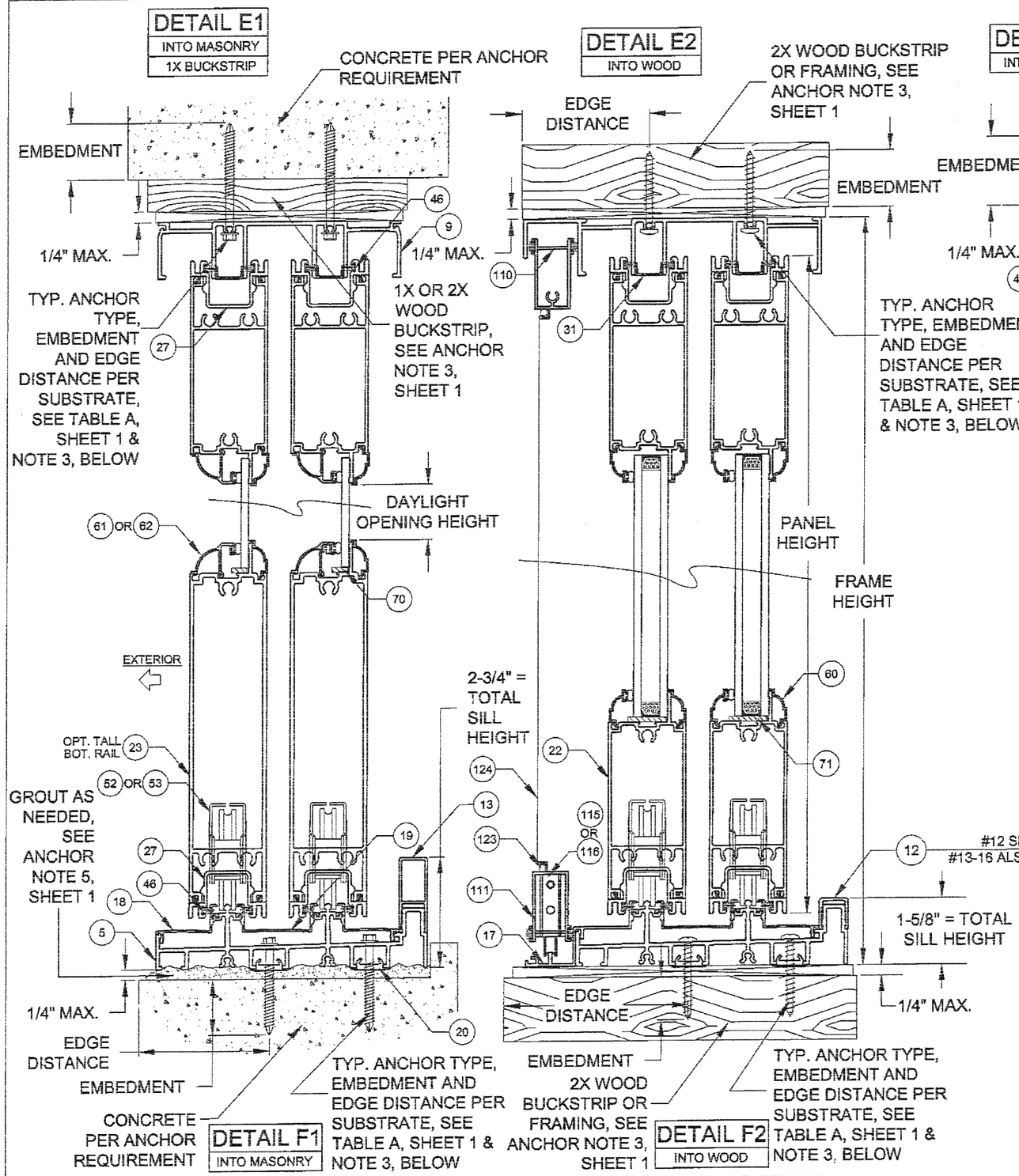

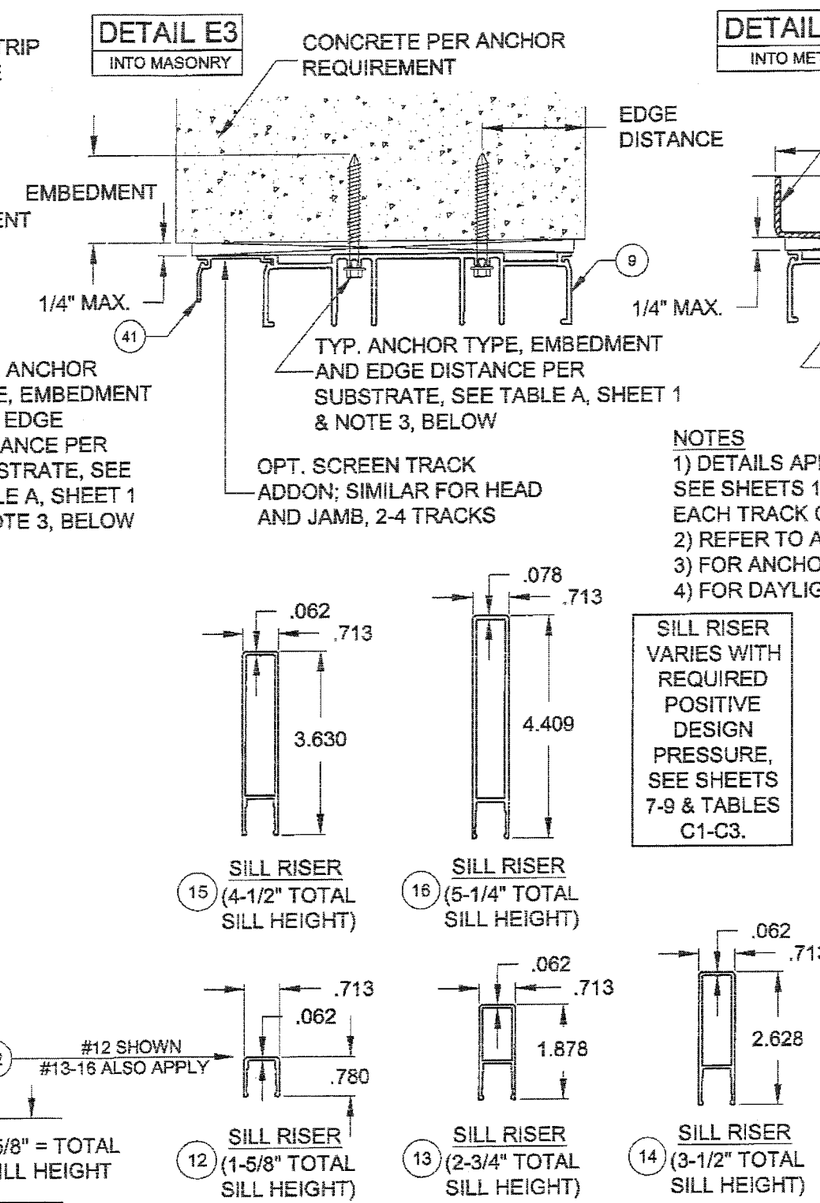

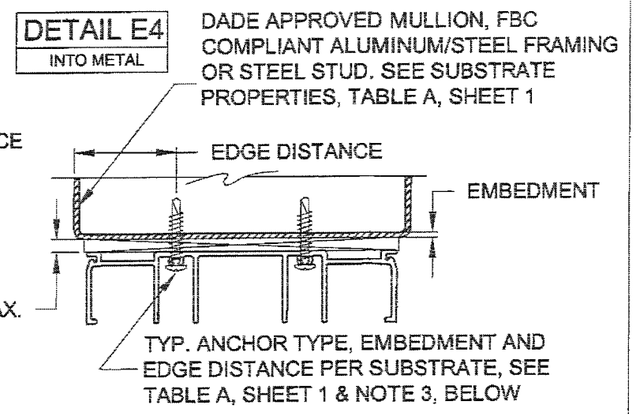

NOTES

1) DETAILS APPLY TO 2, 3 AND 4 TRACK CONFIGURATIONS. SEE SHEETS 13-15 FOR ANCHOR LOCATIONS & SPACING FOR EACH TRACK CONFIGURATION.
2) REFER TO ANCHOR NOTES, SHEET 1.
3) FOR ANCHOR QUANTITIES, SEE TABLES 1-3.
4) FOR DAYLIGHT OPENING (DLO) FORMULAS, SEE SHEET 2.

SILL RISER VARIES WITH REQUIRED POSITIVE DESIGN PRESSURE, SEE SHEETS 7-9 & TABLES C1-C3.

PRODUCT RENEWED
as complying with the Florida Building Code
Acceptance No. 19-0130.02
Expiration Date 3/18/24
By Ishaq I. Khandwala
Miami Dade Product Control

PRODUCT REVISED
as complying with the Florida Building Code
Acceptance No. 17-0420.11
Expiration Date 3/18/19
By Ishaq I. Khandwala
Miami Dade Product Control

ANTHONY LYNN MILLER
LICENSE
No. 58705
11/14/17
STATE OF FLORIDA
PROFESSIONAL ENGINEER

A. LYNN MILLER, P.E.
P.E.# 58705

Title	ALUMINUM SLIDING GLASS DOOR NOA (NI)			Date	04/04/17
Desc.	INSTALLATION, VERTICAL X-SECT.		Drawn By	J ROSOWSKI	
Rev.				Rev. Date	
Series	SGD-680	Scale NTS	Sheet 4 OF 18	DWG No. MD-680.0	Rev. No.

1070 TECHNOLOGY DR
N. VENICE, FL 34275
(941)-480-1600
CERT. OF AUTH. #29296

COPYRIGHT © 2017
PGT INDUSTRIES, INC.
ALL RIGHTS RESERVED

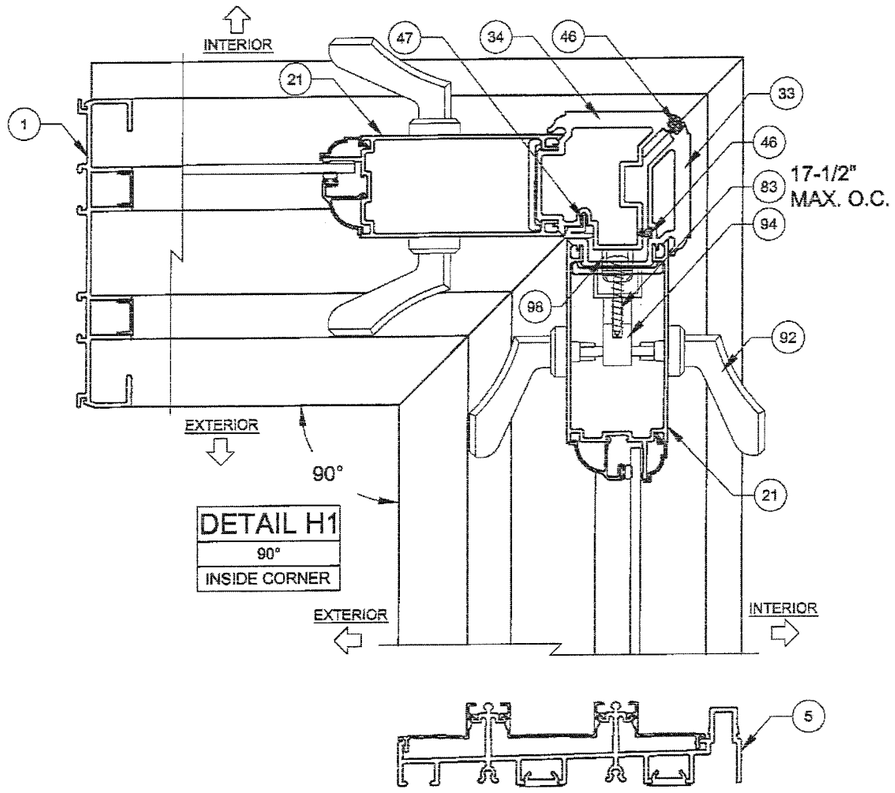

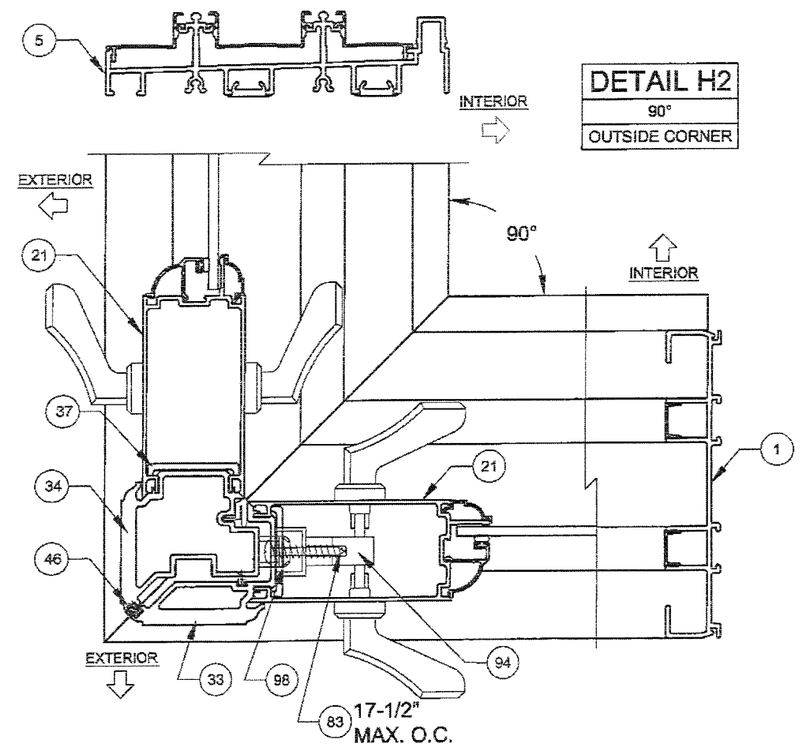

PRODUCT RENEWED
as complying with the Florida
Building Code
Acceptance No 19-0130.02
Expiration Date 3/18/24
By
Miami Dade Product Control

PRODUCT REVISED
as complying with the Florida
Building Code
Acceptance No 17-0420.11
Expiration Date 3/18/19
By
Miami Dade Product Control

ANTHONY LYNN MILLER
LICENSE
No. 58705
11/14/17
STATE OF
FLORIDA
PROFESSIONAL ENGINEER

A. LYNN MILLER, P.E.
P.E.# 58705

NOTES
1) DETAILS APPLY TO 2, 3 AND 4 TRACK CONFIGURATIONS.
2) SEE SHEET 15 FOR 90° CORNER ANCHOR LOCATION & SPACING. FOR ANCHOR QUANTITIES, SEE TABLES 1-3.
3) CORNER ASTRAGAL MAY BE EITHER TO THE INTERIOR OR EXTERIOR, DEPENDING ON CONFIGURATION.

Title	ALUMINUM SLIDING GLASS DOOR NOA (NI)				Date	04/04/17	
Desc.	CORNER ASTRAGAL HORIZ. X-SECT.				Drawn By	J ROSOWSKI	
Rev.					Rev. Date		
Series	SGD-680	Scale NTS	Sheet 5 OF 18	DWG No. MD-680.0			Rev. No.

1070 TECHNOLOGY DR
N. VENICE, FL 34275
(941)-480-1600
CERT. OF AUTH. #29296

COPYRIGHT © 2017
PGT INDUSTRIES, INC.
ALL RIGHTS RESERVED

PGT®

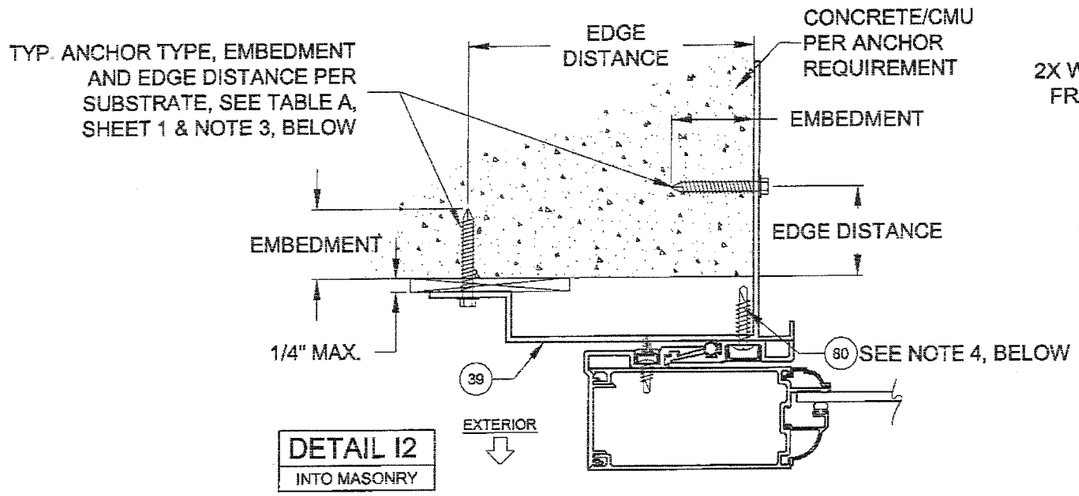

EXTERIOR POCKET

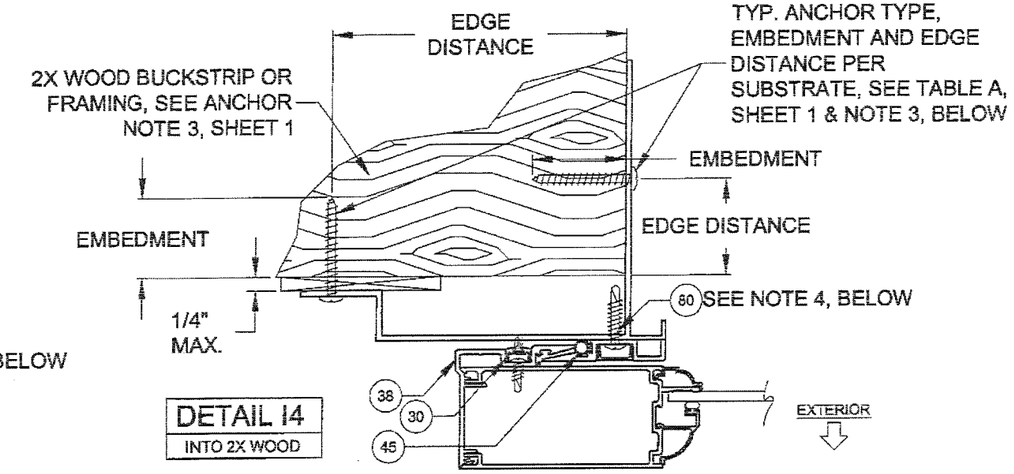

EXTERIOR POCKET

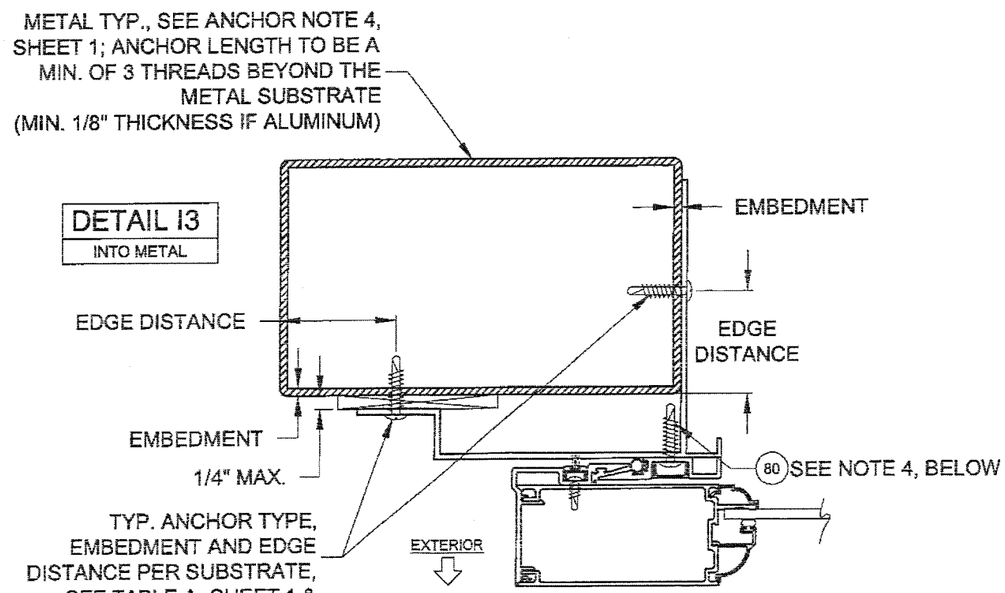

EXTERIOR POCKET

NOTES
1) DETAILS APPLY TO 2, 3 AND 4 TRACK CONFIGURATIONS.
2) REFER TO ANCHOR NOTES, SHEET 1.
3) SEE SHEET 15 FOR POCKET ANCHOR LOCATIONS & SPACING.
4) #10 X 3/4" SMS @ MAX. 5-1/2" FROM ENDS & 12" MAX. O.C.
5) EXTERIOR POCKET APPLICABLE FOR ALL INSTALLATION METHODS.
6) POCKET WALL OR CAVITY IS NOT PART OF THIS APPROVAL AND IS TO BE DESIGNED BY OTHERS AND REVIEWED BY THE AUTHORITY HAVING JURISDICTION.

Title	ALUMINUM SLIDING GLASS DOOR NOA (NI)			Date	04/04/17
Descr.	P-HOOK EXAMPLES, HORIZ. X-SECT.			Drawn By	J ROSOWSKI
Rev.				Rev. Date	
Series	SGD-680	Scale NTS	Sheet 6 OF 18	DWG No. MD-680.0	Rev. No.

1070 TECHNOLOGY DR
N. VENICE, FL 34275
(941)-480-1600
CERT. OF AUTH. #29296

COPYRIGHT © 2017
PGT INDUSTRIES, INC.
ALL RIGHTS RESERVED

PRODUCT RENEWED
as complying with the Florida Building Code
Acceptance No. 19-0130.02
Expiration Date 3/18/24
By
Miami Dade Product Control

PRODUCT REVISED
as complying with the Florida Building Code
Acceptance No. 17-0420.11
Expiration Date 3/18/19
By
Miami Dade Product Control

ANTHONY LYNN MILLER
LICENSE
No. 58705
11/14/17
STATE OF FLORIDA
PROFESSIONAL ENGINEER

A. LYNN MILLER, P.E.
P.E.# 58705

TABLE 1:

Design Pressure (DP) and Anchor Quantities Required, (for all approved configurations on Sheet 2)

For corner astragal anchorage on 90° corner units, see sheet 15

Nominal Panel Width			Door Unit Height															
Table applies to All Glass Types. No Reinforcement is required. See Table C1 for additional +DP limitations.			80"				84"				90"				96"			
			77-3/4" Panel Height				81-3/4" Panel Height				87-3/4" Panel Height				93-3/4" Panel Height			
			Anchor Group				Anchor Group				Anchor Group				Anchor Group			
			A	B	C	D	A	B	C	D	A	B	C	D	A	B	C	D
25-3/16"	17-5/16" DLO	*Design Pressure*	*+120 / -200 psf*				*+120 / -200 psf*				*+120 / -200 psf*				*+120 / -197.1 psf*			
		Head/Sill	C6+2	C6+2	C6+1	C6+1	C8+2	C8+2	C6+1	C6+1	C8+2	C8+2	C8+1	C8+1	C8+2	C8+2	C8+1	C8+1
		Jamb	14	12	10	8	14	12	10	8	14	14	10	8	16	14	12	10
		P-hook	5+5	5+5	5+5	4+4	5+5	5+5	5+5	4+4	5+5	5+5	5+5	4+4	6+6	6+6	6+6	4+4
30"	22-1/8" DLO	*Design Pressure*	*+120 / -200 psf*				*+120 / -192 psf*				*+120 / -176.6 psf*				*+120 / -163.6 psf*			
		Head/Sill	C8+2	C8+2	C8+2	C8+2	C8+2	C8+2	C8+2	C8+2	C8+2	C8+2	C8+2	C8+2	C8+2	C8+2	C8+2	C8+2
		Jamb	14	14	10	8	16	14	10	8	16	14	10	8	16	14	10	8
		P-hook	5+5	5+5	5+5	4+4	6+6	6+6	5+5	4+4	6+6	6+6	5+5	4+4	6+6	6+6	5+5	4+4
36"	28-1/8" DLO	*Design Pressure*	*+120 / -168 psf*				*+120 / -160.2 psf*				*+120 / -151.1 psf*				*+120 / -141.5 psf*			
		Head/Sill	C8+2	C8+2	C6+2	C6+2	C8+2	C8+2	C6+2	C6+2	C8+2	C8+2	C8+2	C8+2	C8+2	C8+2	C8+2	C8+2
		Jamb	14	12	10	8	14	14	10	8	14	14	10	8	16	14	10	8
		P-hook	5+5	5+5	5+5	4+4	5+5	5+5	5+5	4+4	5+5	5+5	5+5	4+4	6+6	6+6	5+5	4+4
42"	34-1/8" DLO	*Design Pressure*	*+120 / -150.2 psf*				*+120 / -148.9 psf*				*+120 / -132.8 psf*				*+115.2 / -120.6 psf*			
		Head/Sill	C8+3	C8+3	C6+3	C6+3	C8+3	C8+3	C8+3	C8+3	C8+3	C8+3	C8+2	C8+2	C8+2	C8+2	C6+2	C6+2
		Jamb	14	12	10	8	16	14	10	8	14	14	10	8	14	14	10	8
		P-hook	5+5	5+5	5+5	4+4	6+6	6+6	5+5	4+4	5+5	5+5	5+5	4+4	5+5	5+5	5+5	4+4
48"	40-1/8" DLO	*Design Pressure*	*+105 / -115 psf*				*+105 / -115 psf*				*+105 / -115 psf*				*+105 / -115 psf*			
		Head/Sill	C6+3	C6+3	C6+3	C6+3	C6+3	C6+3	C6+3	C6+3	C8+3	C8+3	C6+3	C6+3	C8+3	C8+3	C8+3	C8+3
		Jamb	12	10	8	8	12	12	10	8	14	12	10	8	16	14	10	8
		P-hook	4+4	4+4	4+4	4+4	5+5	5+5	5+5	4+4	5+5	5+5	5+5	4+4	6+6	6+6	5+5	4+4

NOTE: THE + DP IN THE TABLE IS BASED ON THE 5-1/4" SILL HEIGHT.

USED IN EXAMPLE 1, SHEET 10

ANCHORAGE TYPE PER SUBSTRATE REQUIRED TO ACHIEVE THE DESIGN PRESSURE, USING THE ANCHOR QUANTIES LISTED BELOW. SEE TABLE A, SHEET 1 FOR COMPLETE ANCHOR LIMITATIONS.

THE MAXIMUM DP AT THESE ANCHOR QUANTITIES. ADDITIONALLY, THE MAXIMUM POSITIVE DP DUE TO THE SILL HEIGHT MUST ALSO BE CONSIDERED, SEE TABLE C1, THIS SHEET.

TOTAL # OF ANCHORS CLUSTERED THROUGH THE HEAD & SILL AT EACH PANEL MEETING POINT. (EX: FOR C4+1, 4 ANCHORS REQUIRED AT PANEL MEETING POINT AND 1 ANCHOR REQUIRED AT MIDSPAN OF PANEL).

TOTAL # OF ANCHORS THROUGH THE JAMB.

THE # OF ANCHORS THROUGH THE P-HOOK INSTALLED FROM THE INTERIOR + THE # OF ANCHORS INSTALLED FROM THE EXTERIOR.

TABLE NOTES:

1) IF WATER INFILTRATION RESISTANCE IS REQUIRED,THE LESSER VALUES OF EITHER TABLE 1 AND TABLE C1 DETERMINES THE WATER LIMITED (+) DP.

2) THE 1-5/8" SILL RISER, #12, MAY ONLY BE USED WHERE WATER INFILTRATION RESISTANCE IS NOT REQUIRED OR OVERHANG IS PER FIG 1. IF SO, +DP'S SHOWN IN TABLES 1 MAY BE USED.

3) SEE SILL RISER TYPES ON SHEET 4.

4) DETAILS APPLY TO 2, 3 AND 4 TRACK CONFIGURATIONS.

5) REFER TO ANCHOR NOTES, SHEET 1.

6) SEE SHEETS 13-15 FOR ANCHOR LOCATIONS & SPACING.

TABLE C1:

Water-Limited (+) Design Pressure		
Sill Riser	Total Sill Height	Max. (+) DP Allowed
12	1-5/8"	See Note 2
13	2-3/4"	+50.0 psf
14	3-1/2"	+73.3 psf
15	4-1/2"	+100.0 psf
16	5-1/4"	+120.0 psf

FIG 1:

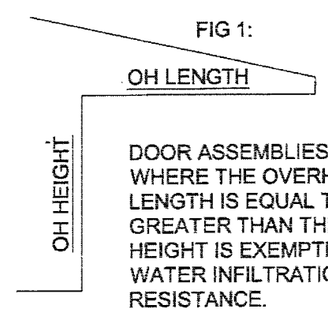

DOOR ASSEMBLIES INSTALLED WHERE THE OVERHANG (OH) LENGTH IS EQUAL TO OR GREATER THAN THE OVERHANG HEIGHT IS EXEMPTED FROM WATER INFILTRATION RESISTANCE.

DLO WIDTH = NOM. PANEL WIDTH - 7.875"
DLO HEIGHT (STD. BOT. RAIL, #22) = DOOR UNIT HEIGHT - 13.47"
DLO HEIGHT (TALL BOT. RAIL, #23) = DOOR UNIT HEIGHT - 17.29"
PANEL HEIGHT = DOOR UNIT HEIGHT - 2.25"

PRODUCT RENEWED
as complying with the Florida
Buiding Code
Acceptance No 19-0130.02
Expiration Date 3/18/34
By Ishaq I. Chanda
Miami Dade Product Control

PRODUCT REVISED
as complying with the Florida
Building Code
Acceptance No 17-0420.11
Expiration Date 3/18/19
Ishaq I. Chanda
Miami Dade Product Control

ANTHONY LYNN MILLER
LICENSE
No. 58705
11/14/17
STATE OF FLORIDA
PROFESSIONAL ENGINEER
A. LYNN MILLER, P.E.
P.E.# 58705

Title	ALUMINUM SLIDING GLASS DOOR NOA (NI)			Date	04/04/17
Desc.	DP & ANCHOR QUANTITY TABLE			Drawn By	J ROSOWSKI
Rev.				Rev. Date	
Series	SGD-680	Scale NTS	Sheet 7 OF 18	DWG No. MD-680.0	Rev. No.

1070 TECHNOLOGY DR
N. VENICE, FL 34275
(941)-480-1600
CERT. OF AUTH. #29296

COPYRIGHT © 2017
PGT INDUSTRIES, INC.
ALL RIGHTS RESERVED

TABLE 2:

Design Pressure (DP) and Anchor Quantities Required, (for all approved configurations on Sheet 2)

For corner astragal anchorage on 90° corner units, see sheets 15

Table applies to Glass Type 1. Reinforcement (part #29) is required in the Exterior Interlock. See Table C2 for additional +DP limitations.

Door Unit Height

Nominal Panel Width	DLO Height	DLO Width		80"				84"				90"			
				77-3/4" Panel Height				81-3/4" Panel Height				87-3/4" Panel Height			
				Anchor Group				Anchor Group				Anchor Group			
				A	B	C	D	A	B	C	D	A	B	C	D
25-3/16"	17-5/16"	DLO	Design Pressure	+120 / -200 psf				+120 / -200 psf				+120 / -200 psf			
			Head/Sill	C6+2	C6+2	C6+1	C6+1	C6+2	C6+2	C6+1	C6+1	C6+2	C6+2	C6+1	C6+1
			Jamb	14	12	10	8	14	12	10	8	14	14	10	8
			P-hook	5+5	5+5	5+5	4+4	5+5	5+5	5+5	4+4	5+5	5+5	5+5	4+4
30"	22-1/8"	DLO	Design Pressure	+120 / -200 psf				+120 / -200 psf				+120 / -200 psf			
			Head/Sill	C8+2	C8+2	C8+2	C8+2	C8+2	C8+2	C8+2	C8+2	C8+2	C8+2	C8+2	C8+2
			Jamb	14	14	10	8	16	14	12	10	18	16	12	10
			P-hook	5+5	5+5	5+5	4+4	6+6	6+6	6+6	4+4	6+6	6+6	6+6	4+4
36"	28-1/8"	DLO	Design Pressure	+120 / -168 psf				+120 / -160.2 psf				+120 / -151.1 psf			
			Head/Sill	C8+2	C8+2	C6+2	C6+2	C8+2	C8+2	C6+2	C6+2	C8+2	C8+2	C8+2	C8+2
			Jamb	14	12	10	8	14	14	10	8	14	14	10	8
			P-hook	5+5	5+5	5+5	4+4	5+5	5+5	5+5	4+4	5+5	5+5	5+5	4+4
42"	34-1/8"	DLO	Design Pressure	+120 / -159.3 psf				+120 / -148.9 psf				+120 / -132.8 psf			
			Head/Sill	C8+3	C8+3	C8+3	C8+3	C8+3	C8+3	C8+3	C8+3	C8+3	C8+3	C8+2	C8+2
			Jamb	16	14	10	8	16	14	10	8	14	14	10	8
			P-hook	6+6	6+6	5+5	4+4	6+6	6+6	5+5	4+4	5+5	5+5	5+5	4+4
48"	40-1/8"	DLO	Design Pressure	+120 / -156.7 psf				+120 / -147.5 psf				+120 / -131.9 psf			
			Head/Sill	C8+4	C8+4	C8+3	C8+3	C8+3	C8+3	C8+3	C8+3	C8+3	C8+3	C8+3	C8+3
			Jamb	16	14	12	10	16	14	12	10	16	14	12	10
			P-hook	6+6	6+6	6+6	4+4	6+6	6+6	6+6	4+4	6+6	6+6	6+6	4+4
54"	46-1/8"	DLO	Design Pressure	+120 / -142 psf				+120 / -142 psf				+120 / -128.9 psf			
			Head/Sill	C8+4	C8+4	C8+4	C8+4	C8+4	C8+4	C8+4	C8+4	C8+4	C8+4	C8+3	C8+3
			Jamb	16	14	12	8	16	14	12	10	16	14	12	10
			P-hook	6+6	6+6	6+6	4+4	6+6	6+6	6+6	4+4	6+6	6+6	6+6	4+4
60"	52-1/8"	DLO	Design Pressure	+105 / -115 psf				+105 / -115 psf				+105 / -115 psf			
			Head/Sill	C8+4	C8+4	C8+4	C8+4	C8+4	C8+4	C8+4	C8+4	C8+4	C8+4	C8+4	C8+4
			Jamb	14	12	10	8	14	12	10	8	16	14	12	10
			P-hook	5+5	5+5	5+5	4+4	5+5	5+5	5+5	4+4	6+6	6+6	6+6	4+4

Nominal Panel Width	DLO Height	DLO Width		96"				102"				108"			
				93-3/4" Panel Height				99-3/4" Panel Height				105-3/4" Panel Height			
				Anchor Group				Anchor Group				Anchor Group			
				A	B	C	D	A	B	C	D	A	B	C	D
25-3/16"	17-5/16"	DLO	Design Pressure	+120 / -200 psf				+120 / -200 psf				+120 / -200 psf			
			Head/Sill	C8+2	C8+2	C8+1	C8+1	C8+2	C8+2	C8+1	C8+1	C10+2	C10+2	C8+1	C8+1
			Jamb	16	14	12	10	18	16	12	10	18	16	12	10
			P-hook	6+6	6+6	6+6	4+4	6+6	6+6	6+6	5+5	7+7	7+7	6+6	5+5
30"	22-1/8"	DLO	Design Pressure	+120 / -187.4 psf				+120 / -187.4 psf				+120 / -187.4 psf			
			Head/Sill	C8+2	C8+2	C8+2	C8+2	C10+2	C10+2	C8+2	C8+2	C10+2	C10+2	C10+2	C10+2
			Jamb	18	16	12	10	18	16	14	10	20	18	14	12
			P-hook	6+6	6+6	6+6	4+4	7+7	7+7	7+7	5+5	7+7	7+7	7+7	5+5
36"	28-1/8"	DLO	Design Pressure	+120 / -143.3 psf				+120 / -135.2 psf				+120 / -129.8 psf			
			Head/Sill	C8+2	C8+2	C8+2	C8+2	C8+2	C8+2	C8+2	C8+2	C8+2	C8+2	C8+2	C8+2
			Jamb	16	14	10	8	16	14	12	10	16	14	12	10
			P-hook	6+6	6+6	5+5	4+4	6+6	6+6	6+6	5+5	6+6	6+6	6+6	5+5
42"	34-1/8"	DLO	Design Pressure	+120 / -120.6 psf				+110.1 / -110.1 psf				+102.7 / -102.7 psf			
			Head/Sill	C8+2	C8+2	C6+2	C6+2	C8+2	C8+2	C6+2	C6+2	C8+2	C8+2	C6+2	C6+2
			Jamb	14	14	10	8	14	12	10	8	14	12	10	8
			P-hook	5+5	5+5	5+5	4+4	5+5	5+5	5+5	5+5	5+5	5+5	5+5	5+5
48"	40-1/8"	DLO	Design Pressure	+118.9 / -118.9 psf				+105 / -107.4 psf				+98.5 / -98.5 psf			
			Head/Sill	C8+3	C8+3	C6+3	C6+3	C8+3	C8+3	C8+2	C8+2	C8+2	C8+2	C8+2	C8+2
			Jamb	16	14	12	10	16	14	10	8	16	14	10	8
			P-hook	6+6	6+6	6+6	4+4	6+6	6+6	5+5	5+5	6+6	6+6	5+5	5+5
54"	46-1/8"	DLO	Design Pressure	+118.9 / -118.9 psf											
			Head/Sill	C8+4	C8+4	C8+3	C8+3								
			Jamb	16	16	12	10								
			P-hook	6+6	6+6	6+6	4+4								
60"	52-1/8"	DLO	Design Pressure	+105 / -113.8 psf											
			Head/Sill	C8+4	C8+4	C8+4	C8+4								
			Jamb	18	16	12	10								
			P-hook	6+6	6+6	6+6	4+4								

Not available in these sizes

Nominal Panel Width	DLO Height	DLO Width		114"				120"			
				111-3/4" Panel Height				117-3/4" Panel Height			
				Anchor Group				Anchor Group			
				A	B	C	D	A	B	C	D
25-3/16"	17-5/16"	DLO	Design Pressure	+120 / -200 psf				+120 / -200 psf			
			Head/Sill	C10+2	C10+2	C8+1	C8+1	C10+2	C10+2	C10+1	C10+1
			Jamb	20	18	14	12	20	18	14	12
			P-hook	7+7	7+7	7+7	5+5	7+7	7+7	7+7	5+5
30"	22-1/8"	DLO	Design Pressure	+120 / -178.4 psf				+120 / -168.2 psf			
			Head/Sill	C10+2	C10+2	C10+2	C10+2	C10+2	C10+2	C10+2	C10+2
			Jamb	20	18	14	12	20	18	14	12
			P-hook	7+7	7+7	7+7	5+5	7+7	7+7	7+7	5+5
36"	28-1/8"	DLO	Design Pressure	+120 / -126 psf				+120 / -122.9 psf			
			Head/Sill	C8+2	C8+2	C8+2	C8+2	C8+2	C8+2	C8+2	C8+2
			Jamb	16	14	12	10	18	16	12	10
			P-hook	6+6	6+6	6+6	5+5	6+6	6+6	6+6	5+5
42"	34-1/8"	DLO	Design Pressure	+97.9 / -97.9 psf				+93.4 / -93.4 psf			
			Head/Sill	C8+2	C8+2	C6+2	C6+2	C8+2	C8+2	C8+2	C8+2
			Jamb	14	14	10	10	14	14	10	10
			P-hook	5+5	5+5	5+5	5+5	5+5	5+5	5+5	5+5
48"	40-1/8"	DLO	Design Pressure	+90.5 / -90.5 psf				+83.1 / -83.1 psf			
			Head/Sill	C8+2	C8+2	C8+2	C8+2	C8+2	C8+2	C8+2	C6+2
			Jamb	14	14	10	10	14	14	10	10
			P-hook	5+5	5+5	5+5	5+5	5+5	5+5	5+5	5+5
54"	46-1/8"	DLO	Design Pressure								
			Head/Sill								
			Jamb								
			P-hook								
60"	52-1/8"	DLO	Design Pressure								
			Head/Sill								
			Jamb								
			P-hook								

USED IN EXAMPLE 2, SHEET 11

NOTE: THE + DP IN THE TABLE IS BASED ON THE 5-1/4" SILL HEIGHT.

ANCHORAGE TYPE PER SUBSTRATE REQUIRED TO ACHIEVE THE DESIGN PRESSURE, USING THE ANCHOR QUANTIES LISTED BELOW. SEE TABLE A, SHEET 1 FOR COMPLETE ANCHOR LIMITATIONS.

THE MAXIMUM DP AT THESE ANCHOR QUANTITIES. ADDITIONALLY, THE MAXIMUM POSITIVE DP DUE TO THE SILL HEIGHT MUST ALSO BE CONSIDERED, SEE TABLE C2, THIS SHEET.

TOTAL # OF ANCHORS CLUSTERED THROUGH THE HEAD & SILL AT EACH PANEL MEETING POINT. (EX: FOR C6+1, 6 ANCHORS REQUIRED AT PANEL MEETING POINT AND 1 ANCHOR REQUIRED AT MIDSPAN OF PANEL).

TOTAL # OF ANCHORS THROUGH THE JAMB.

THE # OF ANCHORS THROUGH THE P-HOOK INSTALLED FROM THE INTERIOR + THE # OF ANCHORS INSTALLED FROM THE EXTERIOR.

PRODUCT RENEWED
as complying with the Florida
Building Code
Acceptance No 19-0130.02
Expiration Date 3/18/24
By Ishay Llanda
Miami Dade Product Control

PRODUCT REVISED
as complying with the Florida
Building Code
Acceptance No 17-0420.01
Expiration Date 3/18/19
By Ishay Llanda
Miami Dade Product Control

TABLE NOTES:

1) IF WATER INFILTRATION RESISTANCE IS REQUIRED,THE LESSER VALUES OF EITHER TABLE 2 AND TABLE C2 DETERMINES THE WATER LIMITED (+) DP.

2) THE 1-5/8" SILL RISER, #12, MAY ONLY BE USED WHERE WATER INFILTRATION RESISTANCE IS NOT REQUIRED OR OVERHANG IS PER FIG 1. IF SO, +DP'S SHOWN IN TABLE 2 MAY BE USED.

3) SEE SILL RISER TYPES ON SHEET 4.

4) DETAILS APPLY TO 2, 3 AND 4 TRACK CONFIGURATIONS.

5) REFER TO ANCHOR NOTES, SHEET 1.

6) SEE SHEETS 13-15 FOR ANCHOR LOCATIONS & SPACING.

TABLE C2:

Water-Limited (+) Design Pressure		
Sill Riser	Total Sill Height	Max. (+) DP Allowed
12	1-5/8"	See Note 2
13	2-3/4"	+50.0 psf
14	3-1/2"	+73.3 psf
15	4-1/2"	+100.0 psf
16	5-1/4"	+120.0 psf

FIG 1:

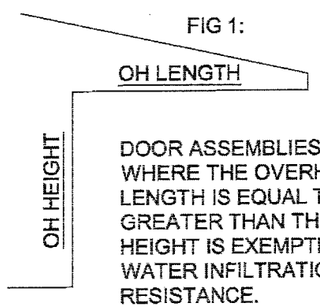

DOOR ASSEMBLIES INSTALLED WHERE THE OVERHANG (OH) LENGTH IS EQUAL TO OR GREATER THAN THE OVERHANG HEIGHT IS EXEMPTED FROM WATER INFILTRATION RESISTANCE.

DLO WIDTH = NOM. PANEL WIDTH - 7.875"
DLO HEIGHT (STD. BOT. RAIL, #22) = DOOR UNIT HEIGHT - 13.47"
DLO HEIGHT (TALL BOT. RAIL, #23) = DOOR UNIT HEIGHT - 17.29"
PANEL HEIGHT = DOOR UNIT HEIGHT - 2.25"

ANTHONY LYNN MILLER
LICENSE
No. 58705
11/14/17
STATE OF FLORIDA
PROFESSIONAL ENGINEER

A. LYNN MILLER, P.E.
P.E.# 58705

Title	ALUMINUM SLIDING GLASS DOOR NOA (NI)				Date	04/04/17	
Desc.	DP & ANCHOR QUANTITY TABLE				Drawn By	J ROSOWSKI	
Rev.					Rev. Date		
Series	SGD-680	Scale NTS	Sheet 8 OF 18	DWG No. MD-680.0		Rev. No.	

1070 TECHNOLOGY DR
N. VENICE, FL 34275
(941)-480-1600

CERT. OF AUTH. #29296

COPYRIGHT © 2017
PGT INDUSTRIES, INC.
ALL RIGHTS RESERVED

TABLE 3:

Design Pressure (DP) and Anchor Quantities Required, (for all approved configurations on Sheet 2)

For corner astragal anchorage on 90° & corner units, see sheet 15

Table applies to Glass Types 2, 3 & 4. Reinforcement (part #29) is required in the Exterior Interlock. See Table C3 for additional +DP limitations.

Door Unit Height

Nominal Panel Width			80"				84"				90"				96"				102"				108"				114"				120"			
			77-3/4" Panel Height				81-3/4" Panel Height				87-3/4" Panel Height				93-3/4" Panel Height				99-3/4" Panel Height				105-3/4" Panel Height				111-3/4" Panel Height				117-3/4" Panel Height			
			Anchor Group				Anchor Group				Anchor Group				Anchor Group				Anchor Group				Anchor Group				Anchor Group				Anchor Group			
			A	B	C	D	A	B	C	D	A	B	C	D	A	B	C	D	A	B	C	D	A	B	C	D	A	B	C	D	A	B	C	D
25-3/16"	17-5/16" DLO	Design Pressure	+120 / -200 psf				+120 / -200 psf				+120 / -200 psf				+120 / -200 psf				+120 / -200 psf				+120 / -200 psf				+120 / -200 psf				+120 / -200 psf			
		Head/Sill	C8+2	C6+2	C6+1	C6+1	C8+2	C8+2	C6+1	C6+1	C8+2	C8+2	C8+1	C8+1	C8+2	C8+2	C8+1	C8+1	C8+2	C8+2	C8+1	C8+1	C10+2	C10+2	C8+1	C8+1	C10+2	C10+2	C8+1	C8+1	C10+2	C10+2	C10+1	C10+1
		Jamb	14	12	10	8	14	12	10	8	14	14	10	8	16	14	12	10	18	16	12	10	18	16	12	10	20	18	14	12	20	18	14	12
		P-hook	5+5	5+5	5+5	4+4	5+5	5+5	5+5	4+4	5+5	5+5	5+5	4+4	6+6	6+6	6+6	4+4	6+6	6+6	6+6	5+5	7+7	7+7	6+6	5+5	7+7	7+7	7+7	5+5	7+7	7+7	7+7	5+5
30"	22-1/8" DLO	Design Pressure	+120 / -200 psf				+120 / -200 psf				+120 / -200 psf				+120 / -187.4 psf				+120 / -187.4 psf				+120 / -187.4 psf				+120 / -178.4 psf				+120 / -168.2 psf			
		Head/Sill	C8+2	C8+2	C8+2	C8+2	C8+2	C8+2	C8+2	C8+2	C8+2	C8+2	C8+2	C8+2	C8+2	C8+2	C8+2	C8+2	C10+2	C10+2	C8+2	C8+2	C10+2	C10+2	C10+2	C10+2	C10+2	C10+2	C10+2	C10+2	C10+2	C10+2	C10+2	C10+2
		Jamb	14	14	10	8	16	14	12	10	18	16	12	10	18	16	12	10	18	16	14	10	20	18	14	12	20	18	14	12	20	18	14	12
		P-hook	5+5	5+5	5+5	4+4	6+6	6+6	6+6	4+4	6+6	6+6	6+6	4+4	6+6	6+6	6+6	4+4	7+7	7+7	7+7	5+5	7+7	7+7	7+7	5+5	7+7	7+7	7+7	5+5	7+7	7+7	7+7	5+6
36"	28-1/8" DLO	Design Pressure	+120 / -200 psf				+120 / -191.7 psf				+120 / -175.7 psf				+120 / -162.2 psf				+120 / -162.2 psf				+120 / -162.2 psf				+120 / -153.3 psf				+120 / -144.3 psf			
		Head/Sill	C8+3	C8+3	C8+3	C8+3	C8+3	C8+3	C8+2	C8+2	C8+2	C8+2	C8+2	C8+2	C8+2	C8+2	C8+2	C8+2	C10+2	C10+2	C8+2	C8+2	C10+2	C10+2	C10+2	C10+2	C10+2	C10+2	C10+2	C10+2	C10+2	C10+2	C10+2	C10+2
		Jamb	16	16	12	10	18	16	12	10	18	16	12	10	18	16	12	10	18	16	14	10	20	18	14	12	20	18	14	12	20	18	14	12
		P-hook	6+6	6+6	6+6	4+4	6+6	6+6	6+6	4+4	6+6	6+6	6+6	4+4	6+6	6+6	6+6	4+4	7+7	7+7	7+7	5+5	7+7	7+7	7+7	5+5	7+7	7+7	7+7	5+5	7+7	7+7	7+7	5+5
42"	34-1/8" DLO	Design Pressure	+120 / -183.9 psf				+120 / -172.1 psf				+120 / -157.1 psf				+120 / -144.6 psf				+120 / -144.6 psf				Glass Type 3: +120 / -141.6 psf Glass Types 2 & 4: +120 / -144.6 psf				Glass Type 3: +120 / -135.6 psf Glass Types 2 & 4: +120 / -135.7 psf				+116.4 / -127.4 psf			
		Head/Sill	C8+3	C8+3	C8+3	C8+3	C8+3	C8+3	C8+3	C8+3	C8+3	C8+3	C8+3	C8+3	C8+3	C8+3	C8+2	C8+2	C10+3	C10+3	C8+2	C8+2	C10+3	C10+3	C10+2	C10+2	C10+3	C10+3	C10+2	C10+2	C10+2	C10+2	C10+2	C10+2
		Jamb	18	16	12	10	18	16	12	10	18	16	12	10	18	16	12	10	18	16	14	10	20	18	14	12	20	18	14	12	20	18	14	12
		P-hook	6+6	6+6	6+6	4+4	6+6	6+6	6+6	4+4	6+6	6+6	6+6	4+4	6+6	6+6	6+6	4+4	7+7	7+7	7+7	5+5	7+7	7+7	7+7	5+5	7+7	7+7	7+7	5+5	7+7	7+7	7+7	5+6
48"	40-1/8" DLO	Design Pressure	+120 / -169.4 psf				+120 / -158.1 psf				+120 / -143.9 psf				+120 / -131.3 psf				+105 / -115 psf				+105 / -115 psf				Glass Type 3: +105 / -113.5 psf Glass Types 2 & 4: +105 / -115 psf				Glass Type 3: +105 / -107.1 psf Glass Types 2 & 4: +105 / -115 psf			
		Head/Sill	C8+4	C8+4	C8+4	C8+4	C8+4	C8+4	C8+3	C8+3	C8+3	C8+3	C8+3	C8+3	C8+3	C8+3	C8+3	C8+3	C8+3	C8+3	C8+3	C8+3	C10+3	C10+3	C8+3	C8+3	C10+3	C10+3	C8+3	C8+3	C10+3	C10+3	C10+3	C10+3
		Jamb	18	16	12	10	18	16	12	10	18	16	12	10	18	16	12	10	16	14	12	10	18	16	12	10	18	16	14	10	20	18	14	12
		P-hook	6+6	6+6	6+6	4+4	6+6	6+6	6+6	4+4	6+6	6+6	6+6	4+4	6+6	6+6	6+6	4+4	6+6	6+6	6+6	5+5	6+6	6+6	6+6	5+5	7+7	7+7	7+7	5+5	7+7	7+7	7+7	5+6
54"	46-1/8" DLO	Design Pressure	+120 / -142 psf				+120 / -142 psf				+120 / -133.9 psf				+111.6 / -122.2 psf				Not available in these sizes															
		Head/Sill	C8+4	C8+4	C8+4	C8+4	C8+4	C8+4	C8+4	C8+4	C8+4	C8+4	C8+4	C8+4	C8+4	C8+4	C8+3	C8+3																
		Jamb	16	14	12	8	16	14	12	10	18	16	12	10	18	16	12	10																
		P-hook	6+6	6+6	6+6	4+4	6+6	6+6	6+6	4+4	6+6	6+6	6+6	4+4	6+6	6+6	6+6	4+4																
60"	52-1/8" DLO	Design Pressure	+105 / -115 psf				+105 / -115 psf				+105 / -115 psf				+105 / -115 psf																			
		Head/Sill	C8+4	C8+4	C6+4	C8+4	C8+4	C8+4	C6+4	C6+4	C8+4	C8+4	C8+4	C8+4	C8+4	C8+4	C8+4	C8+4																
		Jamb	14	12	10	8	14	12	10	8	16	14	12	10	18	18	12	10																
		P-hook	5+5	5+5	5+5	4+4	5+5	5+5	5+5	4+4	6+6	6+6	6+6	4+4	6+6	6+6	6+6	4+4																

NOTE: THE + DP IN THE TABLE IS BASED ON THE 5-1/4" SILL HEIGHT.

ANCHORAGE TYPE PER SUBSTRATE REQUIRED TO ACHIEVE THE DESIGN PRESSURE, USING THE ANCHOR QUANTIES LISTED BELOW. SEE TABLE A, SHEET 1 FOR COMPLETE ANCHOR LIMITATIONS.

THE MAXIMUM DP AT THESE ANCHOR QUANTITIES. ADDITIONALLY, THE MAXIMUM POSITIVE DP DUE TO THE SILL HEIGHT MUST ALSO BE CONSIDERED, SEE TABLE C3, THIS SHEET.

TOTAL # OF ANCHORS CLUSTERED THROUGH THE HEAD & SILL AT EACH PANEL MEETING POINT. (EX: FOR C6+1, 6 ANCHORS REQUIRED AT PANEL MEETING POINT AND 1 ANCHOR REQUIRED AT MIDSPAN OF PANEL).

TOTAL # OF ANCHORS THROUGH THE JAMB.

THE # OF ANCHORS THROUGH THE P-HOOK INSTALLED FROM THE INTERIOR + THE # OF ANCHORS INSTALLED FROM THE EXTERIOR.

TABLE NOTES:

1) IF WATER INFILTRATION RESISTANCE IS REQUIRED,THE LESSER VALUES OF EITHER TABLE 3 AND TABLE C3 DETERMINES THE WATER LIMITED (+) DP.

2) THE 1-5/8" SILL RISER, #12, MAY ONLY BE USED WHERE WATER INFILTRATION RESISTANCE IS NOT REQUIRED OR OVERHANG IS PER FIG 1. IF SO, +DP'S SHOWN IN TABLE 3 MAY BE USED.

3) SEE SILL RISER TYPES ON SHEET 4.

4) DETAILS APPLY TO 2, 3 AND 4 TRACK CONFIGURATIONS.

5) REFER TO ANCHOR NOTES, SHEET 1.

6) SEE SHEETS 13-15 FOR ANCHOR LOCATIONS & SPACING.

TABLE C3:

Water-Limited (+) Design Pressure		
Sill Riser	Total Sill Height	Max. (+) DP Allowed
12	1-5/8"	See Note 2
13	2-3/4"	+50.0 psf
14	3-1/2"	+73.3 psf
15	4-1/2"	+100.0 psf
16	5-1/4"	+120.0 psf

FIG 1:

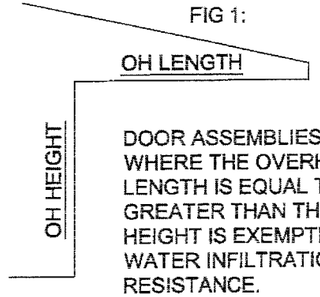

DOOR ASSEMBLIES INSTALLED WHERE THE OVERHANG (OH) LENGTH IS EQUAL TO OR GREATER THAN THE OVERHANG HEIGHT IS EXEMPTED FROM WATER INFILTRATION RESISTANCE.

DLO WIDTH = NOM. PANEL WIDTH - 7.875"
DLO HEIGHT (STD. BOT. RAIL, #22) = DOOR UNIT HEIGHT - 13.47"
DLO HEIGHT (TALL BOT. RAIL, #23) = DOOR UNIT HEIGHT - 17.29"
PANEL HEIGHT = DOOR UNIT HEIGHT - 2.25"

PRODUCT RENEWED
as complying with the Florida Buiding Code
Acceptance No 19-0130.02
Expiration Date 3/18/24
By [illegible]
Miami Dade Product Control

PRODUCT REVISED
as complying with the Florida Building Code
Acceptance No 17-0420.11
Expiration Date 3/18/19
By [illegible]
Miami Dade Product Control

ANTHONY LYNN MILLER
LICENSE
No. 58705
STATE OF FLORIDA
PROFESSIONAL ENGINEER
11/14/17

A. LYNN MILLER, P.E.
P.E.# 58705

Title	ALUMINUM SLIDING GLASS DOOR NOA (NI)					Date	04/04/17
Desc.	DP & ANCHOR QUANTITY TABLE					Drawn By	J ROSOWSKI
Rev.						Rev. Date	
Series	SGD-680	Scale	NTS	Sheet	9 OF 18	DWG No.	MD-680.0
Rev. No.							

1070 TECHNOLOGY DR
N. VENICE, FL 34275
(941)-480-1600
CERT. OF AUTH. #29296

COPYRIGHT © 2017
PGT INDUSTRIES, INC.
ALL RIGHTS RESERVED

EXAMPLE 1:

3-PANEL, 3 TRACK, STRAIGHT CONFIGURATION - PXXX,
EXTERIOR POCKET,
48" X 80" NOM. PANELS, 3/16" IG GLAZING,
ANCHOR GROUP B IN WOOD SUBSTRATE,
PROJECT DESIGN PRESSURE REQUIRED: +98.2/-108.6 PSF

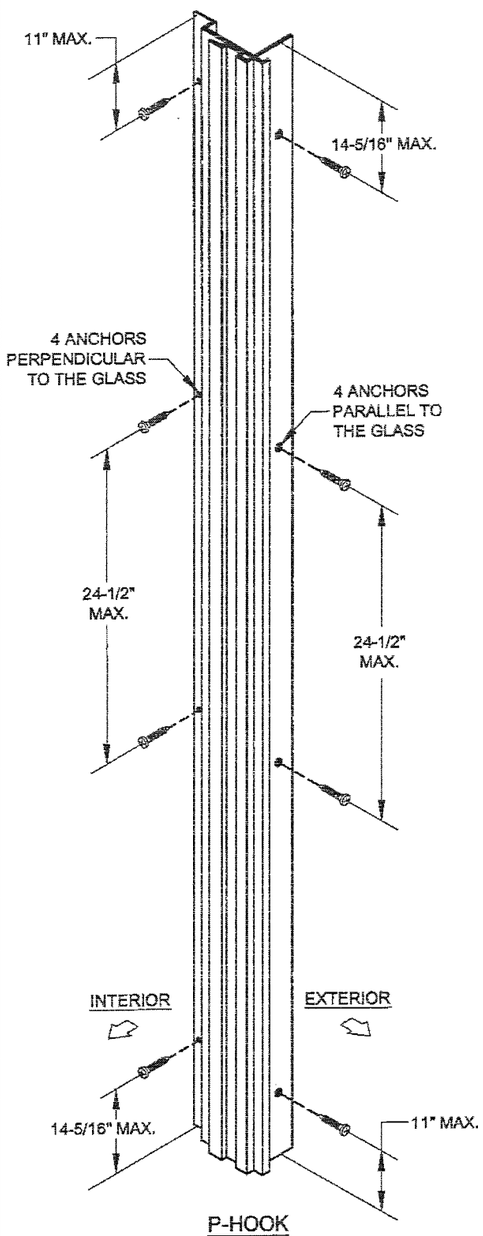

P-HOOK ANCHORAGE DETAILS

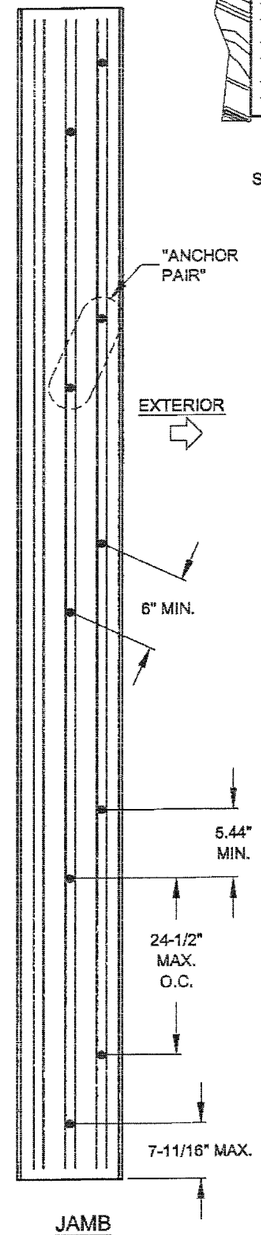

JAMB ANCHORAGE DETAILS

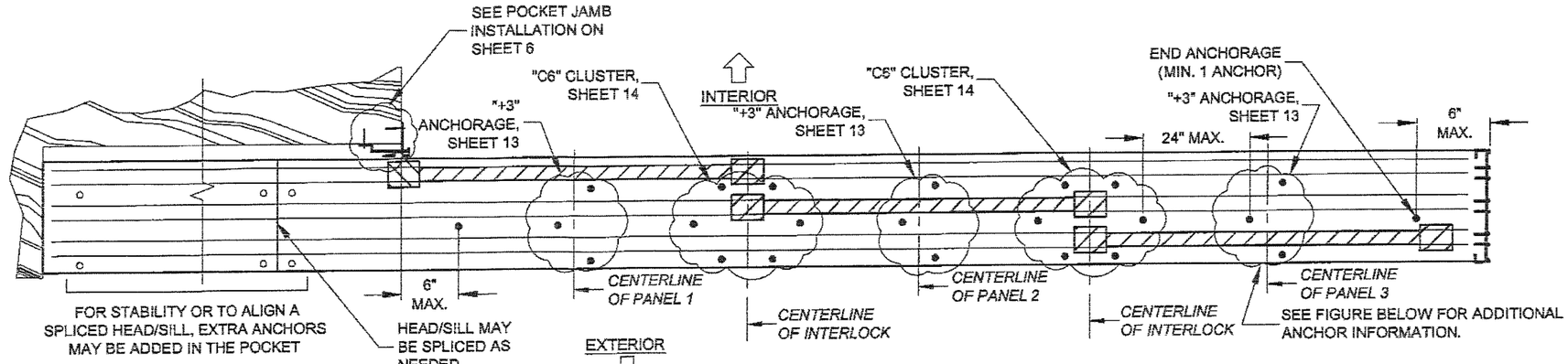

PXXX, 3-TRACK
HEAD/SILL ANCHORAGE DETAILS

USER INSTRUCTIONS:

1) KNOWING THE PRODUCT'S REQUIREMENTS, SCAN THROUGH TABLES 1-3 FOR A DESIGN PRESSURE THAT MEETS OR EXCEEDS THE REQUIREMENT OF +98.2/-108.6 AT A NOM. PANEL SIZE OF 48" X 80". FROM TABLE 1, SHEET 7, THE DESIGN PRESSURE IS +105/-115 WHICH EXCEEDS THE PROJECT DESIGN PRESSURE REQUIREMENTS.

FOR WOOD INSTALLATION USING ANY ANCHOR IN GROUP B (SEE TABLE A), TABLE 1 SHOWS ANCHOR REQUIREMENTS OF:

Head/Sill	C6+3
Jamb	10
P-hook	4+4

2) ANCHOR LOCATION DETAILS, (AS SHOWN ON THIS SHEET) CAN BE FOUND ON:
HEAD/SILL: SHEET 14 FOR THE "C6" CLUSTER ANCHORS AT INTERLOCK, SHEET 13 FOR THE INTERMEDIATE "+3" ANCHORS LOCATED AT THE CENTERLINE OF ALL 3 PANELS.
JAMB: 5 PAIRS OF ANCHORS = 10 TOTAL ANCHORS; REFER TO SHEET 13 FOR GENERAL LAYOUT.
P-HOOK: 4 ANCHORS PERPENDICULAR TO GLASS AND 4 ANCHORS PARALLEL TO GLASS; REFER TO SHEET 15 FOR GENERAL LAYOUT.

3) INSTALLATION DETAILS INTO WOOD CAN BE FOUND ON:
HEAD/SILL & JAMB: SHEETS 3 & 4
P-HOOK: SHEET 6

FOR PRODUCT REFERENCES, ALSO SEE:
A) SHEET 2 FOR ALLOWABLE CONFIGURATIONS AND EXACT LOCATIONS OF CROSS-SECTION DRAWINGS.
B) SHEET 12 FOR SPECIFIC GLAZING TYPES.
C) SHEET 16 FOR ALLOWABLE PANEL TYPES AND CALL NAMES.
D) SHEETS 4 & 17 FOR EXTRUSION CROSS-SECTION DRAWINGS.
E) SHEET 18 FOR A BILL OF MATERIALS.

END PANEL ANCHOR EXCEPTION, ("+1" ANCHORAGE ONLY):

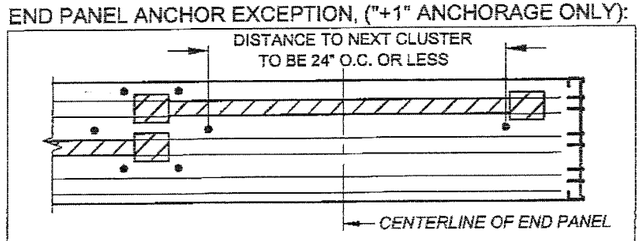

ANCHORS AT THE MIDPOINT OF END PANELS ARE ONLY REQUIRED IF THE O.C. DISTANCE TO THE NEXT ANCHOR CLUSTER IS OVER 24", OTHERWISE ANCHORS ARE NOT REQUIRED AS PER THE FIGURE ABOVE:

PRODUCT RENEWED
as complying with the Florida Building Code
Acceptance No. 19-0130.02
Expiration Date 3/18/24
By Miami Dade Product Control

PRODUCT REVISED
as complying with the Florida Building Code
Acceptance No. 17-0420.11
Expiration Date 3/18/19
By Miami Dade Product Control

ANTHONY LYNN MILLER
LICENSE
No. 58705
STATE OF FLORIDA
PROFESSIONAL ENGINEER
11/14/17

A. LYNN MILLER, P.E.
P.E.# 58705

Title	ALUMINUM SLIDING GLASS DOOR NOA (NI)			Date	04/04/17
Desc.	STRAIGHT DOOR EXAMPLE			Drawn By	J ROSOWSKI
Rev.				Rev. Date	
Series	SGD-680	Scale NTS	Sheet 10 OF 18	DWG No. MD-680.0	Rev. No.

1070 TECHNOLOGY DR
N. VENICE, FL 34275
(941)-480-1600

CERT. OF AUTH. #29296

COPYRIGHT © 2017
PGT INDUSTRIES, INC.
ALL RIGHTS RESERVED

EXAMPLE 2:

5-PANEL, 2 TRACK,
90° OUTSIDE CORNER - PXX/XXO,
EXTERIOR MOUNT POCKET,
60" X 84" NOM. PANELS, 3/16" TEMPERED GLAZING
ANCHOR GROUP D IN CONCRETE SUBSTRATE
PROJECT DESIGN PRESSURE REQUIRED: +102.4/-112.1 PSF

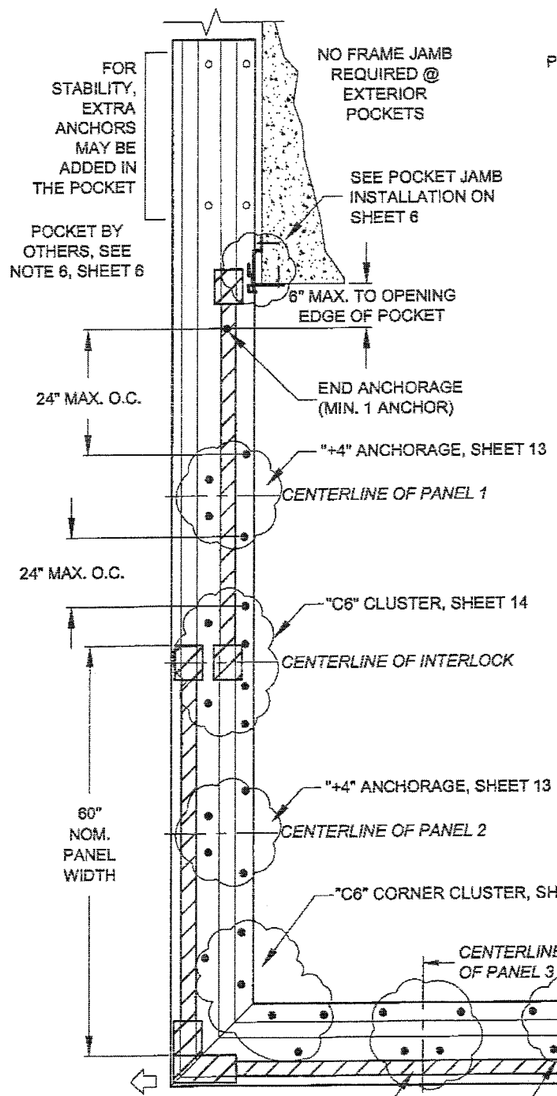

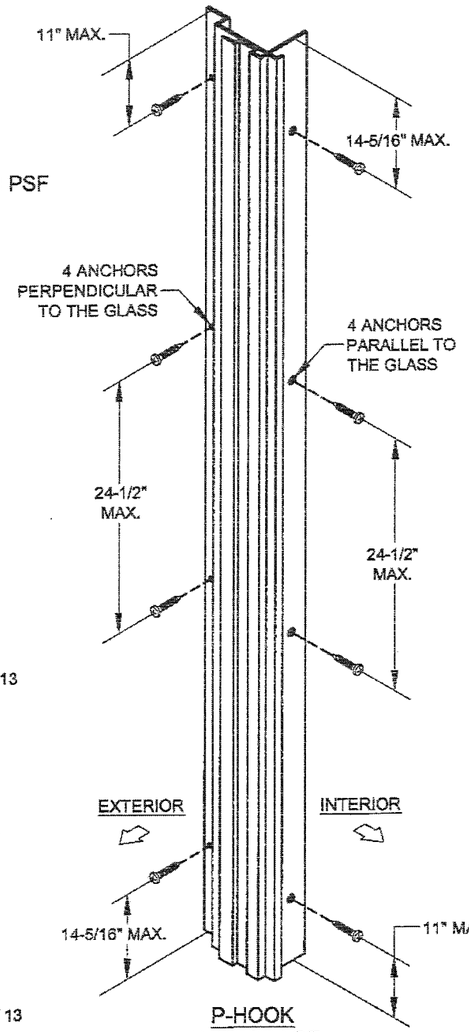

P-HOOK ANCHORAGE DETAILS

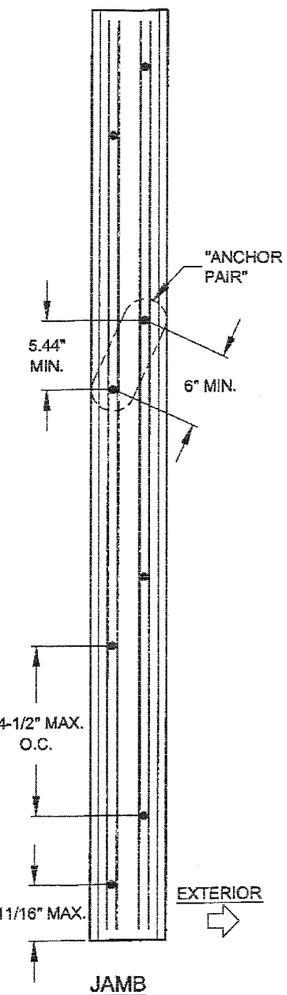

JAMB ANCHORAGE DETAILS

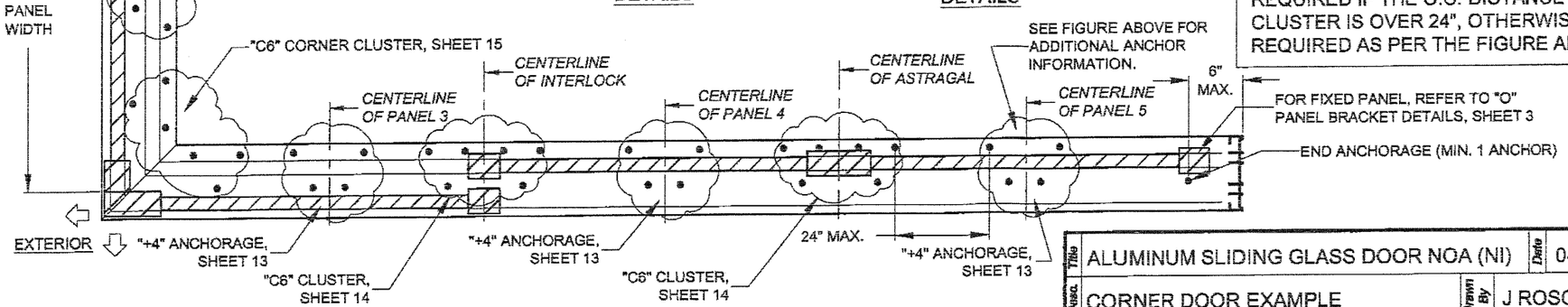

HEAD/SILL ANCHORAGE DETAILS
90° OUTSIDE CORNER, PXX/XXO, 2-TRACK
(SEE SHEET 5 FOR 90° INSIDE CORNER MOUNT)

USER INSTRUCTIONS:

1) KNOWING THE PRODUCT REQUIREMENTS, SCAN THROUGH TABLES 1-3 FOR A DESIGN PRESSURE THAT MEETS OR EXCEEDS THE REQUIREMENT OF +102.4/-112.1 AT A NOM. PANEL SIZE OF 60" X 84". FROM TABLE 2, SHEET 8, THE DESIGN PRESSURE IS +105/-115 WHICH EXCEEDS THE PROJECT DESIGN PRESSURE REQUIREMENTS.

FOR CONCRETE INSTALLATION USING ANY ANCHOR IN GROUP D (SEE TABLE A), TABLE 1 SHOWS ANCHOR REQUIREMENTS OF:

Head/Sill	C6+4
Jamb	8
P-hook	4+4

2) ANCHOR LOCATION DETAILS, (AS SHOWN ON THIS SHEET) CAN BE FOUND ON:
HEAD/SILL: SHEET 14 FOR THE "C6" CLUSTER ANCHORS LOCATED AT THE ASTRAGAL AND INTERLOCKS, SHEET 13 FOR THE INTERMEDIATE "+4 ANCHORS.
HEAD/SILL @ CORNER: SHEET 15 FOR THE "C6" CLUSTER ANCHORS @ THE 90° CORNER.
JAMB: 4 PAIRS OF ANCHORS = 8 TOTAL ANCHORS; REFER TO SHEET 13 FOR GENERAL LAYOUT.
P-HOOK: 4 ANCHORS PERPENDICULAR TO GLASS AND 4 ANCHORS PARALLEL TO GLASS; REFER TO SHEET 15 FOR GENERAL LAYOUT.

3) INSTALLATION DETAILS INTO CONCRETE CAN BE FOUND ON:
HEAD/SILL & JAMB: SHEETS 3 & 4
P-HOOK: SHEET 6

FOR PRODUCT REFERENCES, ALSO SEE:
A) SHEET 2 FOR ALLOWABLE CONFIGURATIONS AND EXACT LOCATIONS OF CROSS-SECTION DRAWINGS.
B) SHEET 12 FOR SPECIFIC GLAZING TYPE.
C) SHEET 16 FOR ALLOWABLE PANEL TYPES AND CALL NAMES.
D) SHEETS 4 & 17 FOR EXTRUSION CROSS-SECTION DRAWINGS.
E) SHEET 18 FOR A BILL OF MATERIALS.

END PANEL ANCHOR EXCEPTION, ("+1" ANCHORAGE ONLY):

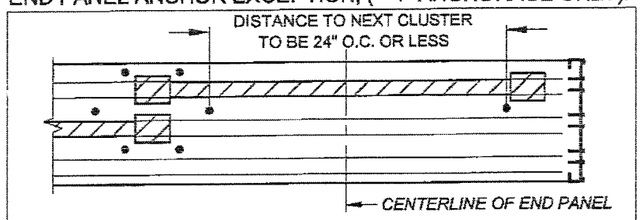

ANCHORS AT THE MIDPOINT OF END PANELS ARE ONLY REQUIRED IF THE O.C. DISTANCE TO THE NEXT ANCHOR CLUSTER IS OVER 24", OTHERWISE ANCHORS ARE NOT REQUIRED AS PER THE FIGURE ABOVE:

PRODUCT RENEWED
as complying with the Florida Building Code
Acceptance No 19-0130.02
Expiration Date 3/18/24
By
Miami Dade Product Control

PRODUCT REVISED
as complying with the Florida Building Code
Acceptance No 17-0420.11
Expiration Date 3/18/19
By
Miami Dade Product Control

ANTHONY LYNN MILLER
LICENSE
No. 58705
11/14/17
STATE OF FLORIDA
PROFESSIONAL ENGINEER

A. LYNN MILLER, P.E.
P.E.# 58705

Title	ALUMINUM SLIDING GLASS DOOR NOA (NI)	Date	04/04/17
Descr.	CORNER DOOR EXAMPLE	Drawn By	J ROSOWSKI
Rev.		Rev. Date	
Series	SGD-680	Scale	NTS
Sheet	11 OF 18	DWG No.	MD-680.0
Rev. No.			

1070 TECHNOLOGY DR
N. VENICE, FL 34275
(941)-480-1600
CERT. OF AUTH. #29296

COPYRIGHT © 2017
PGT INDUSTRIES, INC.
ALL RIGHTS RESERVED

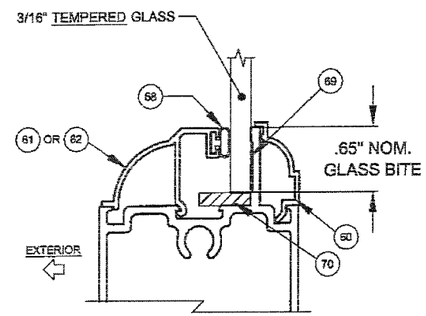

GLASS TYPE 1
3/16" TEMPERED GLAZING DETAIL

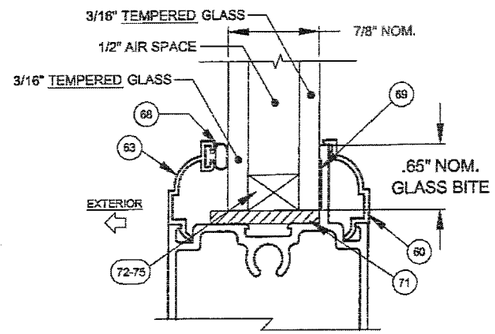

GLASS TYPE 2
3/16" TEMPERED I.G. GLAZING DETAIL

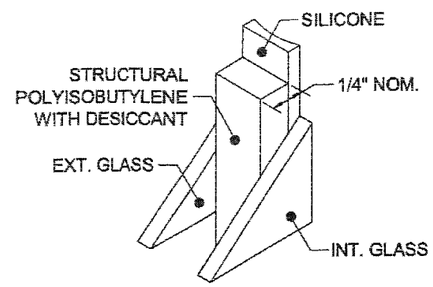

72 KODISPACE
4SG TPS

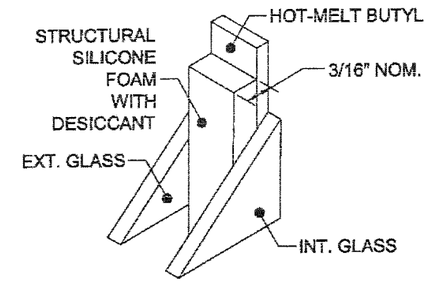

73 SUPER
SPACER® NXT™

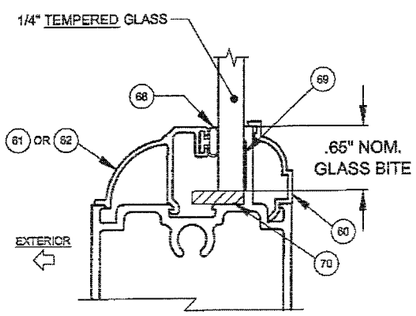

GLASS TYPE 3
1/4" TEMPERED GLAZING DETAIL

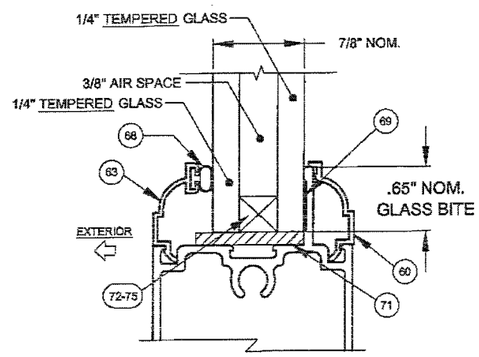

GLASS TYPE 4
1/4" TEMPERED I.G. GLAZING DETAIL

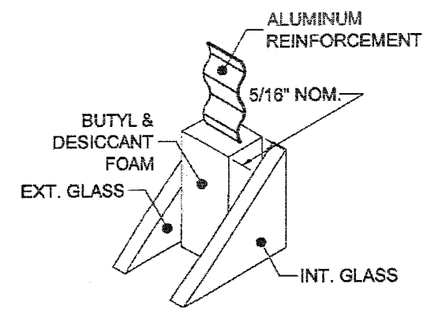

74 DURASEAL®
SPACER

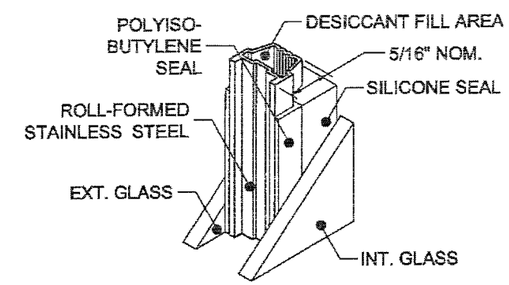

75 XL EDGE™
SPACER

Part #	Description	Material
72	Kommerling Kodispace 4SG TPS Spacer System	See this Sheet for Materials
73	Quanex Super Spacer nXT with Hot Melt Butyl	
74	Quanex Duraseal Spacer	
75	Cardinal XL Edge Spacer	

REFERENCE TEST REPORTS: FTL-8717, 8968 & 8970

PRODUCT RENEWED
as complying with the Florida Building Code
Acceptance No. 19-0130.02
Expiration Date 3/18/24
By Ishwar V. Chand
Miami Dade Product Control

PRODUCT REVISED
as complying with the Florida Building Code
Acceptance No. 17-0420.11
Expiration Date 3/18/19
By Ishwar V. Chand
Miami Dade Product Control

ANTHONY LYNN MILLER
LICENSE
No. 58705
STATE OF FLORIDA
PROFESSIONAL ENGINEER
11/14/17

A. LYNN MILLER, P.E.
P.E.# 58705

Title	ALUMINUM SLIDING GLASS DOOR NOA (NI)			Date	04/04/17
Desc.	GLAZING & SPACER DETAILS		Drawn By	J ROSOWSKI	
Rev.	ADDED SPACERS - JR			Rev. Date	05/15/16
Series	SGD-680	Scale NTS	Sheet 12 OF 18	DWG No. MD-680.0	Rev. No.

1070 TECHNOLOGY DR
N. VENICE, FL 34275
(941)-480-1600
CERT. OF AUTH. #29296

COPYRIGHT © 2017
PGT INDUSTRIES, INC.
ALL RIGHTS RESERVED

JAMB ANCHOR LAYOUT FOR ALL DOORS:

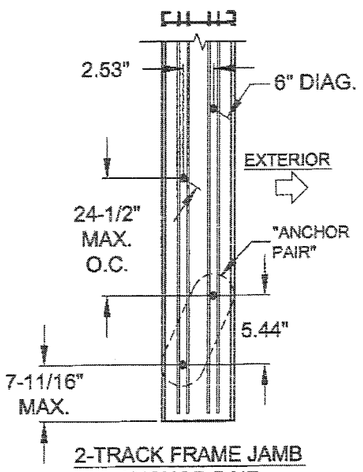

2-TRACK FRAME JAMB ANCHOR PAIR

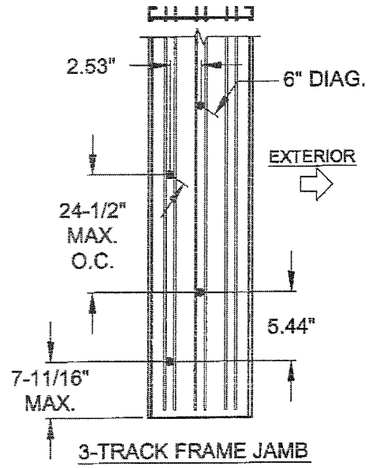

3-TRACK FRAME JAMB ANCHOR PAIR

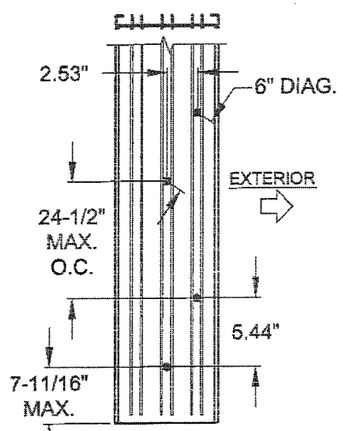

3-TRACK FRAME JAMB ANCHOR PAIR (ALTERNATE ANCHOR LOCATION

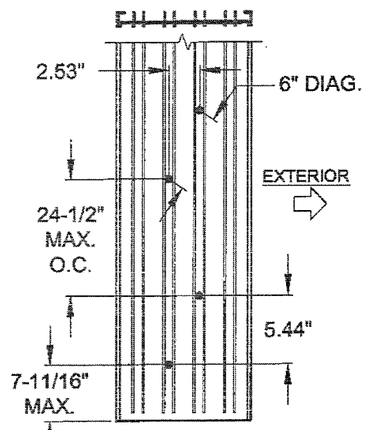

4-TRACK FRAME JAMB ANCHOR PAIR

FIGURES PERTAINS TO THE FOLLOWING JAMB ANCHOR LOCATIONS:

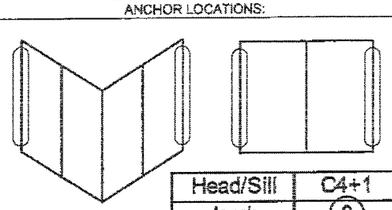

Head/Sill	C4+1
Jamb	8
P-hook	4+4

NOTES:
1) ALL DIMENSIONS SHOWN ARE BASED ON MINIMUM ALLOWED, UNLESS OTHERWISE NOTED.

2) FOR 3-TRACK JAMBS, ANCHORS MAY BE INSTALLED EITHER IN THE EXT. OR INT. TRACK.

3) MIN. OF 8 ANCHORS IN JAMB (4 PAIRS).

HEAD/SILL "+" INTERMEDIATE ANCHORS LAYOUT FOR ALL DOORS, (SEE TABLES 1-3):

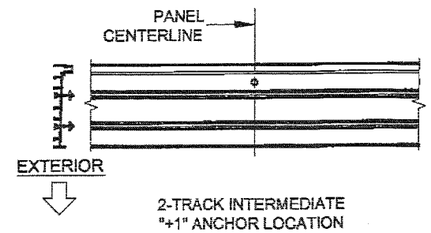

2-TRACK INTERMEDIATE "+1" ANCHOR LOCATION

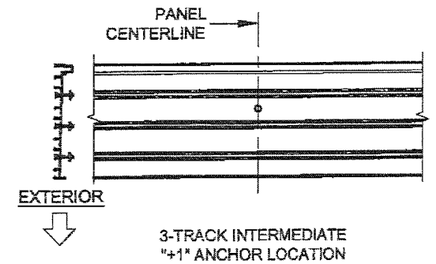

3-TRACK INTERMEDIATE "+1" ANCHOR LOCATION

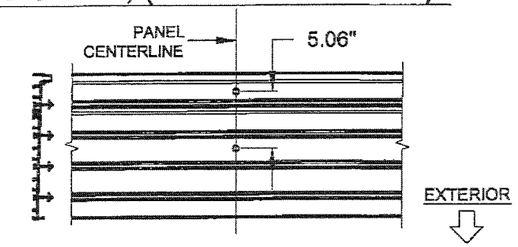

4-TRACK INTERMEDIATE "+2" ANCHOR LOCATION (ALSO USE WHERE "+1" ANCHOR IS REQUIRED)

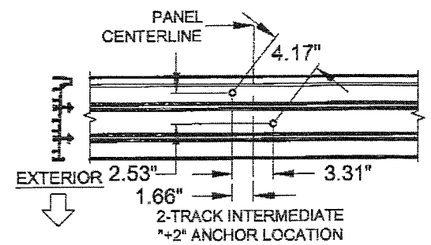

2-TRACK INTERMEDIATE "+2" ANCHOR LOCATION

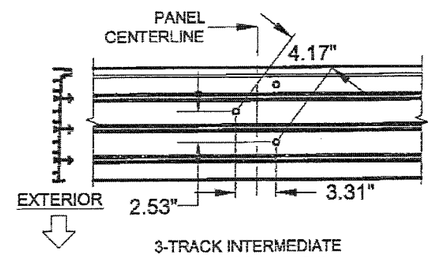

3-TRACK INTERMEDIATE "+3"ANCHOR LOCATION (ALSO USE WHERE "+2" ANCHOR IS REQUIRED)

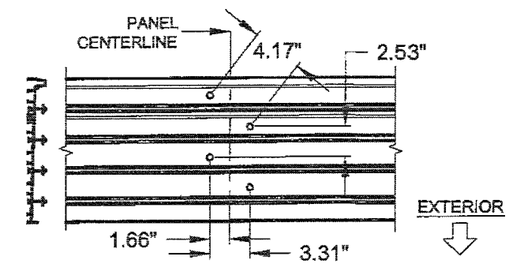

4-TRACK INTERMEDIATE "+4"ANCHOR LOCATION (ALSO USE WHERE "+3" ANCHOR IS REQUIRED)

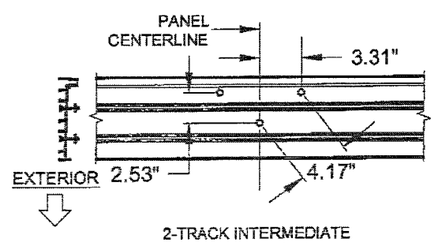

2-TRACK INTERMEDIATE "+3" ANCHOR LOCATION

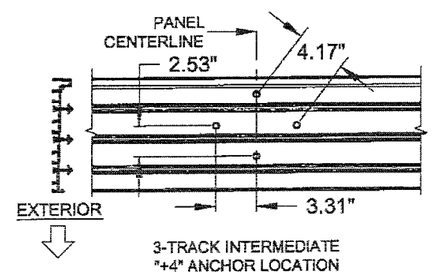

3-TRACK INTERMEDIATE "+4" ANCHOR LOCATION

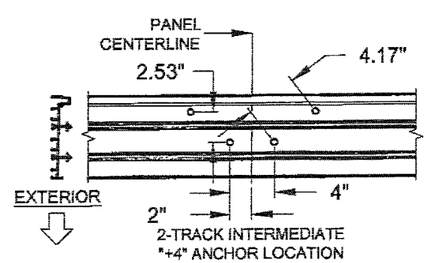

2-TRACK INTERMEDIATE "+4" ANCHOR LOCATION

FIGURES PERTAIN TO THE FOLLOWING INTERMEDIATE ANCHOR LOCATIONS:

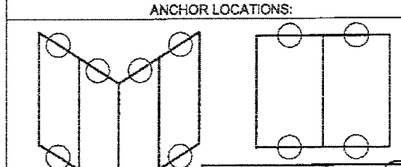

Head/Sill	C4+1
Jamb	8
P-hook	4+4

NOTES:
1) ALL DIMENSIONS SHOWN ARE BASED ON MINIMUM ALLOWED.

2) SILL SHOWN, HEAD SIMILAR.

PRODUCT RENEWED
as complying with the Florida Building Code
Acceptance No 19-0130.02
Expiration Date 3/18/24
By Ishaq I. Chanda
Miami Dade Product Control

PRODUCT REVISED
as complying with the Florida Building Code
Acceptance No 17-0420.11
Expiration Date 3/18/19
By Ishaq I. Chanda
Miami Dade Product Control

ANTHONY LYNN MILLER
LICENSE
No. 58705
STATE OF FLORIDA
PROFESSIONAL ENGINEER
4/14/17

A. LYNN MILLER, P.E.
P.E.# 58705

Title	ALUMINUM SLIDING GLASS DOOR NOA (NI)			Date	04/04/17
Desc.	ANCHOR LAYOUT			Drawn By	J ROSOWSKI
Rev.				Rev. Date	
Series	SGD-680	Scale NTS	Sheet 13 OF 18	DWG No. MD-680.0	Rev. No.

1070 TECHNOLOGY DR
N. VENICE, FL 34275
(941)-480-1600
CERT. OF AUTH. #29296

COPYRIGHT © 2017
PGT INDUSTRIES, INC.
ALL RIGHTS RESERVED

HEAD/SILL CLUSTER ANCHORS (@INTERLOCK & ASTRAGAL) LAYOUT FOR ALL DOORS, (SEE TABLES 1-3):

FIGURES PERTAIN TO THE FOLLOWING INTERLOCK/ASTRAGAL ANCHOR LOCATIONS:

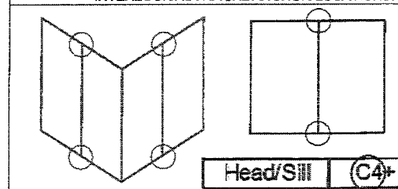

Head/Sill	C4+1
Jamb	8
P-hook	4+4

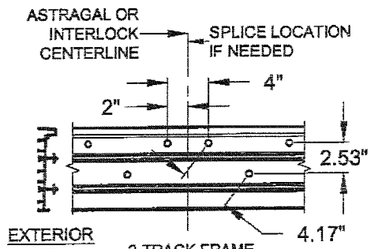

2-TRACK FRAME
(USE WHERE 6 CLUSTER ANCHORS ARE REQUIRED, "C6")

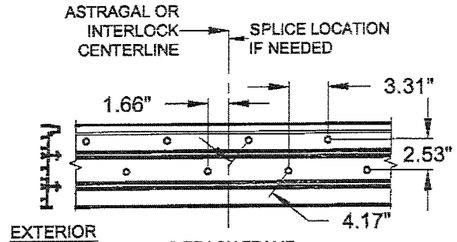

2-TRACK FRAME
(USE WHERE 8 CLUSTER ANCHORS ARE REQUIRED, "C8")

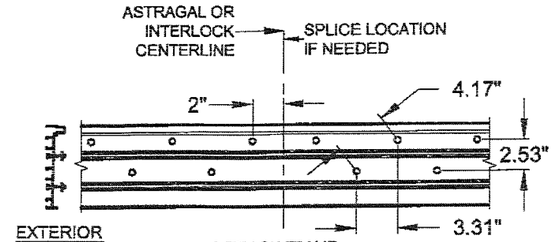

2-TRACK FRAME
(USE WHERE 10 CLUSTER ANCHORS ARE REQUIRED, "C10")

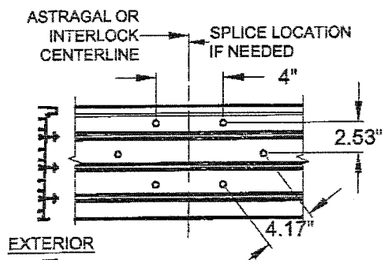

3-TRACK FRAME
(USE WHERE 6 CLUSTER ANCHORS ARE REQUIRED, "C6")

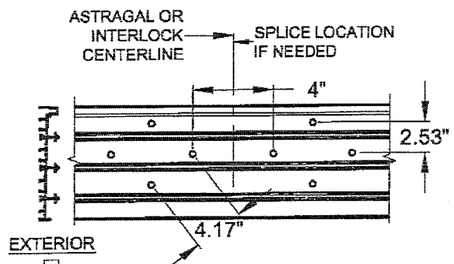

3-TRACK FRAME
(USE WHERE 8 CLUSTER ANCHORS ARE REQUIRED, "C8")

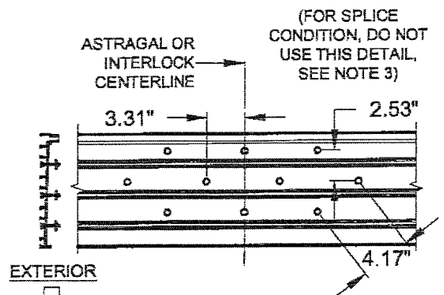

3-TRACK FRAME
(USE WHERE 10 CLUSTER ANCHORS ARE REQUIRED, "C10")

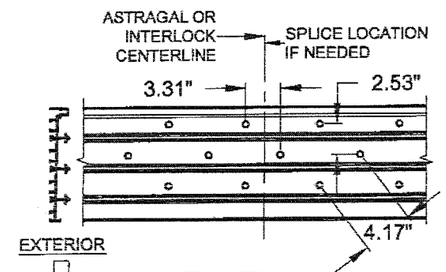

3-TRACK FRAME
(USE WHERE 10 OR 12 CLUSTER ANCHORS ARE REQUIRED, "C12")

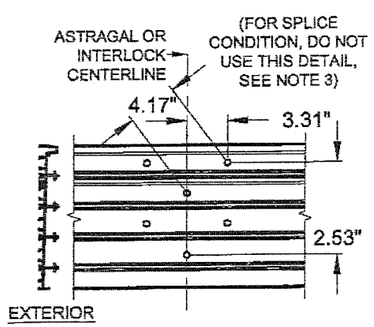

4-TRACK FRAME
(USE WHERE 6 CLUSTER ANCHORS ARE REQUIRED, "C6")

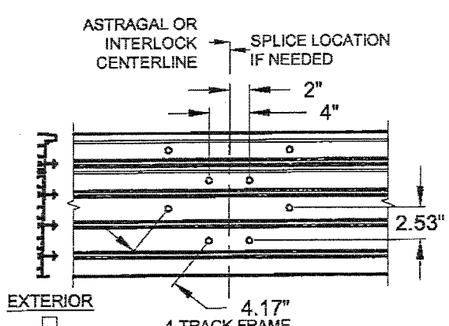

4-TRACK FRAME
(USE WHERE 8 CLUSTER ANCHORS ARE REQUIRED, "C8")

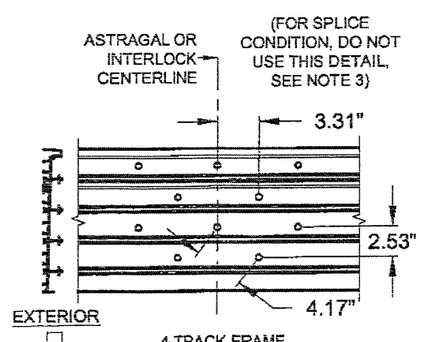

4-TRACK FRAME
(USE WHERE 10 CLUSTER ANCHORS ARE REQUIRED, "C10")

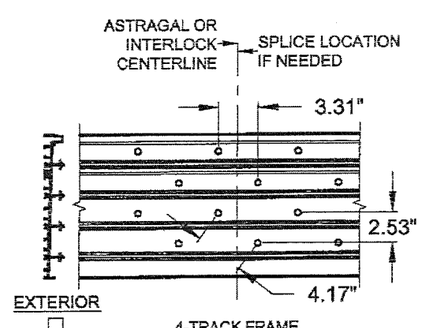

4-TRACK FRAME
(USE WHERE 10 OR 12 CLUSTER ANCHORS ARE REQUIRED, "C12")

NOTES:
1) ALL DIMENSIONS SHOWN ARE BASED ON MINIMUM ALLOWED.

2) SILL SHOWN, HEAD SIMILAR.

3) IF A SPLICE IS NOT SHOWN AT A GIVEN CLUSTER QUANTITY, USE THE NEXT HIGHER CLUSTER QUANTITY.

PRODUCT RENEWED
as complying with the Florida Building Code
Acceptance No. 19-0130.02
Expiration Date 3/18/24
By Ishaq I. Chanda
Miami Dade Product Control

PRODUCT REVISED
as complying with the Florida Building Code
Acceptance No. 17-0420.11
Expiration Date 3/18/19
By Ishaq I. Chanda
Miami Dade Product Control

ANTHONY LYNN MILLER
LICENSE
No. 58705
4/14/17
STATE OF FLORIDA
PROFESSIONAL ENGINEER

A. LYNN MILLER, P.E.
P.E.# 58705

Title	ALUMINUM SLIDING GLASS DOOR NOA (NI)			Date	04/04/17
Desc.	ANCHOR LAYOUT			Drawn By	J ROSOWSKI
Rev.				Rev. Date	
Series	SGD-680	Scale NTS	Sheet 14 OF 18	DWG No. MD-680.0	Rev. No.

1070 TECHNOLOGY DR
N. VENICE, FL 34275
(941)-480-1600

CERT. OF AUTH. #29296

COPYRIGHT © 2017
PGT INDUSTRIES, INC.
ALL RIGHTS RESERVED

P-HOOK ANCHORS LAYOUT FOR ALL DOORS:

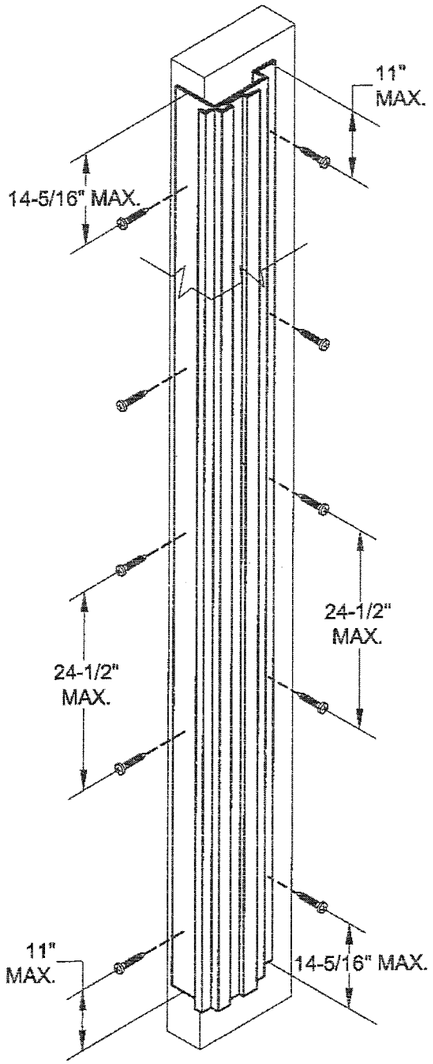

NOTES:
1) SEE TABLES 1-3 FOR EXACT QUANTITY OF ANCHORS REQUIRED IN THE P-HOOK.

FIGURE PERTAINS TO THE FOLLOWING POCKET JAMB (P-HOOK) ANCHOR LOCATIONS:

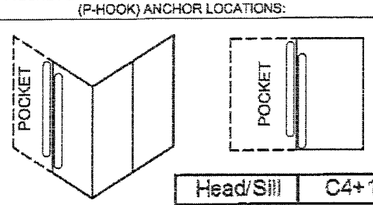

Head/Sill	C4+1
Jamb	8
P-hook	5+5

HEAD/SILL 90° OUTSIDE CORNER CLUSTER ANCHORS LAYOUT, (SEE TABLES 1-3):
(90° INSIDE CORNER SIMILAR, SEE SHEET 5)

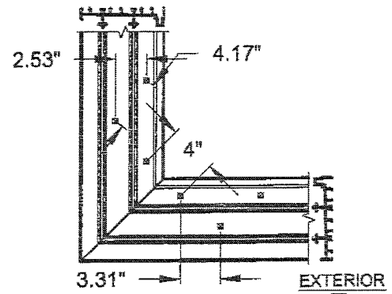

90° CORNER, 2-TRACK (USE WHERE 6 CLUSTER ANCHORS ARE REQUIRED, "C6")

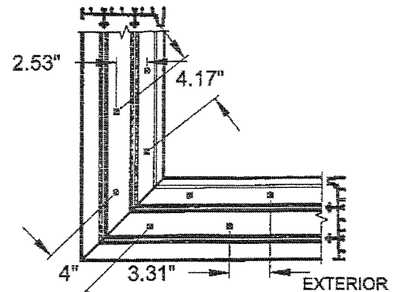

90° CORNER, 2-TRACK (USE WHERE 8 CLUSTER ANCHORS ARE REQUIRED, "C8")

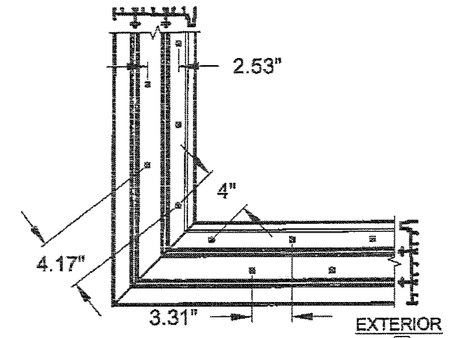

90° CORNER, 2-TRACK (USE WHERE 10 CLUSTER ANCHORS ARE REQUIRED, "C10")

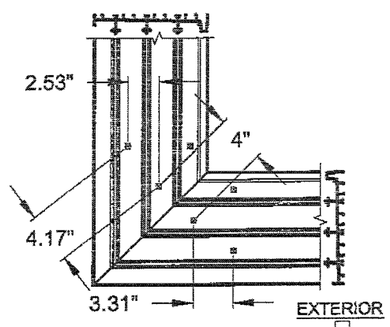

90° CORNER, 3-TRACK (USE WHERE 6 CLUSTER ANCHORS ARE REQUIRED, "C6")

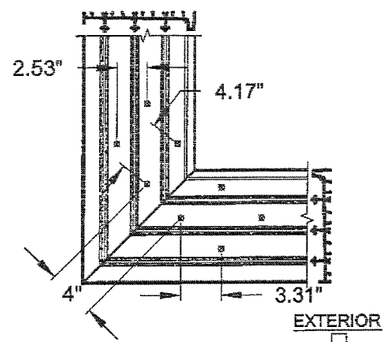

90° CORNER, 3-TRACK (USE WHERE 8 CLUSTER ANCHORS ARE REQUIRED, "C8")

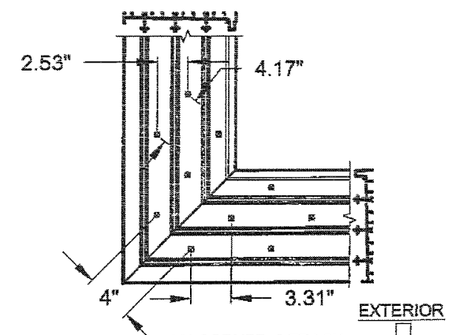

90° CORNER, 3-TRACK (USE WHERE 10 CLUSTER ANCHORS ARE REQUIRED, "C10")

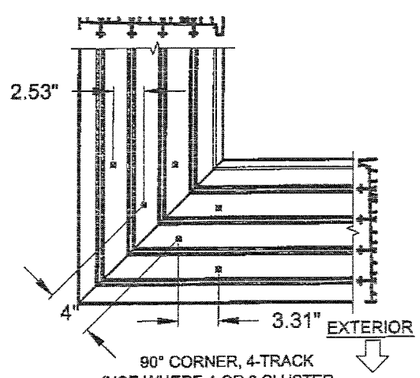

90° CORNER, 4-TRACK (USE WHERE 4 OR 6 CLUSTER ANCHORS ARE REQUIRED, "C6")

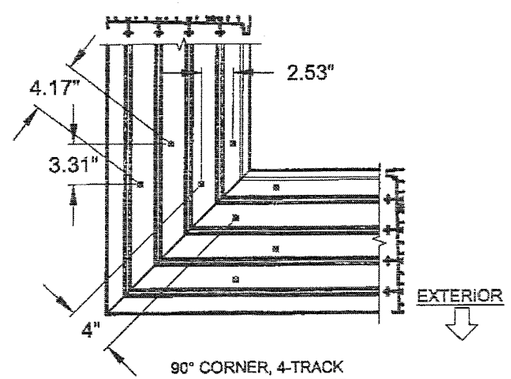

90° CORNER, 4-TRACK (USE WHERE 8 CLUSTER ANCHORS ARE REQUIRED, "C8")

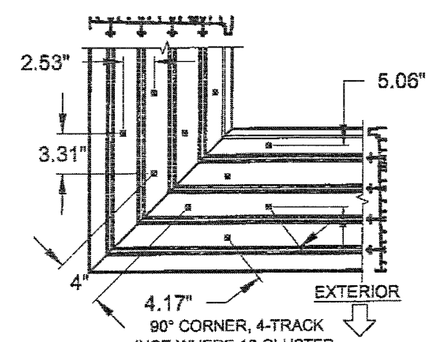

90° CORNER, 4-TRACK (USE WHERE 10 CLUSTER ANCHORS ARE REQUIRED, "C10")

FIGURES PERTAIN TO THE FOLLOWING 90° CORNER ANCHOR LOCATIONS:

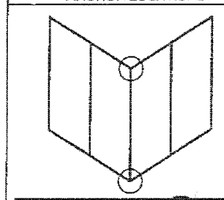

Head/Sill	C4+1
Jamb	8
P-hook	4+4

NOTES:
1) ALL DIMENSIONS SHOWN ARE BASED ON MINIMUM ALLOWED.

2) DETAILS DEPICT ANCHOR QUANTITY AND SPACING, AND WOULD BE SIMILAR FOR INSIDE AND OUTSIDE CORNER CONFIGURATIONS.

3) SILL SHOWN, HEAD SIMILAR.

PRODUCT RENEWED
as complying with the Florida Building Code
Acceptance No. 19-0130.02
Expiration Date 3/18/24
By Ishaq I. Ahmad
Miami Dade Product Control

PRODUCT REVISED
as complying with the Florida Building Code
Acceptance No. 17-0420.11
Expiration Date 3/19/19
By Ishaq I. Ahmad
Miami Dade Product Control

ANTHONY LYNN MILLER
LICENSE
No. 58705
STATE OF FLORIDA
PROFESSIONAL ENGINEER
11/14/17

A. LYNN MILLER, P.E.
P.E.# 58705

Title	ALUMINUM SLIDING GLASS DOOR NOA (NI)			Date	04/04/17
Desc.	ANCHOR LAYOUT			Drawn By	J ROSOWSKI
Rev.				Rev. Date	
Series	SGD-680	Scale NTS	Sheet 15 OF 18	DWG No. MD-680.0	Rev. No.

1070 TECHNOLOGY DR
N. VENICE, FL 34275
(941)-480-1600
CERT. OF AUTH. #29296

COPYRIGHT © 2017
PGT INDUSTRIES, INC.
ALL RIGHTS RESERVED

PANEL TYPES	SINGLE INTERLOCK OUT	SINGLE INTERLOCK IN	DOUBLE INTERLOCK	FIXED STILE	LOCKSTILE W/ HANDLE	ASTRAGAL BOX IN	ASTRAGAL BOX IN W/ HANDLE	ASTRAGAL BOX OUT	ASTRAGAL BOX OUT W/ HANDLE	INSIDE 90° ASTRAGAL RECEIVER W/ HANDLE	OUTSIDE 90° ASTRAGAL RECEIVER	OUTSIDE 90° ASTRAGAL RECEIVER W/ HANDLE	INSIDE 90° CORNER LOCKSTILE W/ HANDLE	OUTSIDE 90° CORNER LOCKSTILE W/ HANDLE
SINGLE INTERLOCK OUT	E	F		PP	K		L (BOX IN)		L (BOX OUT)	TA		TC	TR	TQ
SINGLE INTERLOCK IN	B			P	A		C (BOX IN)		C (BOX OUT)	SA		SC	IC	SQ
DOUBLE INTERLOCK			I	YR	GR									
FIXED STILE	RR	R	Y			S (BOX IN)		S (BOX OUT)		FD	FC			
LOCKSTILE W/ HANDLE	D	M	G			J (BOX IN)	W (BOX IN)	J (BOX OUT)	W (BOX OUT)					
ASTRAGAL BOX IN				T (BOX IN)	U (BOX IN)									
ASTRAGAL BOX IN W/ HANDLE		N (BOX IN)												
ASTRAGAL BOX OUT				T (BOX OUT)	U (BOX OUT)									
ASTRAGAL BOX OUT W/ HANDLE	LR (BOX OUT)		WR (BOX OUT)											
INS. 90° ASTRAGAL RECEIVER W/ HANDLE	AT	AS		DF										
OUTSIDE 90° ASTRAGAL RECEIVER				CF										
OUT. 90° ASTRAGAL RECEIVER W/ HANDLE	CT	CS												
INS. 90° CORNER LOCKSTILE W/ HANDLE	RT	CI												
OUT. 90° CORNER LOCKSTILE W/ HANDLE	QT	QS												

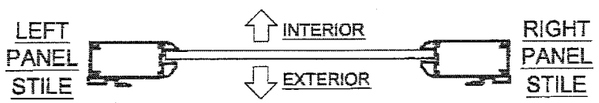

PANEL "E" SHOWN. SEE TABLE FOR OTHER PANEL TYPES AND APPLICABLE STILE/ASTRAGAL REQUIREMENTS.

PANEL NOTES:

1. SEE DP/ANCHOR TABLES 1-3, SHEETS 7-9 FOR PANEL SIZES & DESIGN PRESSURE.

2. PANEL TYPES NOT SHOWN ARE NOT REQUIRED FOR ANY CONFIGURATIONS AND ARE NOT AVAILABLE.

3. MAXIMUM NOMINAL PANEL WIDTH FOR ALL PANEL CONFIGURATIONS IS 48" PER TABLE 1 AND 60" PER TABLES 2 & 3. REFER TO TABLES 1-3 FOR DOOR UNIT HEIGHT LIMITATIONS AT EACH PANEL WIDTH.

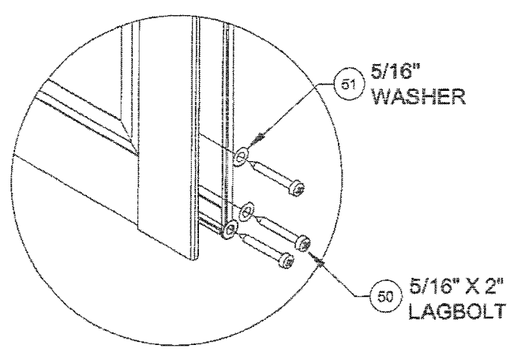

PANEL CORNER DETAIL
SHOWN WITHOUT STILE COVER

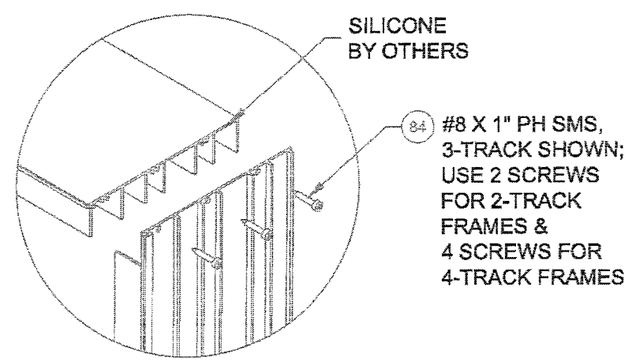

FRAME CORNER DETAIL
3-TRACK FRAME SHOWN

PRODUCT RENEWED as complying with the Florida Building Code
Acceptance No. 19-0130.02
Expiration Date 3/18/2024
By Ishwar L. Gangwani
Miami Dade Product Control

PRODUCT REVISED as complying with the Florida Building Code
Acceptance No. 17-0420.11
Expiration Date 3/18/15
By Ishwar L. Gangwani
Miami Dade Product Control

ANTHONY LYNN MILLER
LICENSE
No. 58705
11/14/17
STATE OF FLORIDA
PROFESSIONAL ENGINEER

A. LYNN MILLER, P.E.
P.E.# 58705

Title	ALUMINUM SLIDING GLASS DOOR NOA (NI)	Date	04/04/17
Desc.	PANEL TYPES	Drawn By	J ROSOWSKI
Rev.		Rev. Date	
Series	SGD-680	Scale	NTS
Sheet	16 OF 18	DWG No.	MD-680.0
Rev. No.			

1070 TECHNOLOGY DR
N. VENICE, FL 34275
(941)-480-1600
CERT. OF AUTH. #29296

COPYRIGHT © 2017
PGT INDUSTRIES, INC.
ALL RIGHTS RESERVED

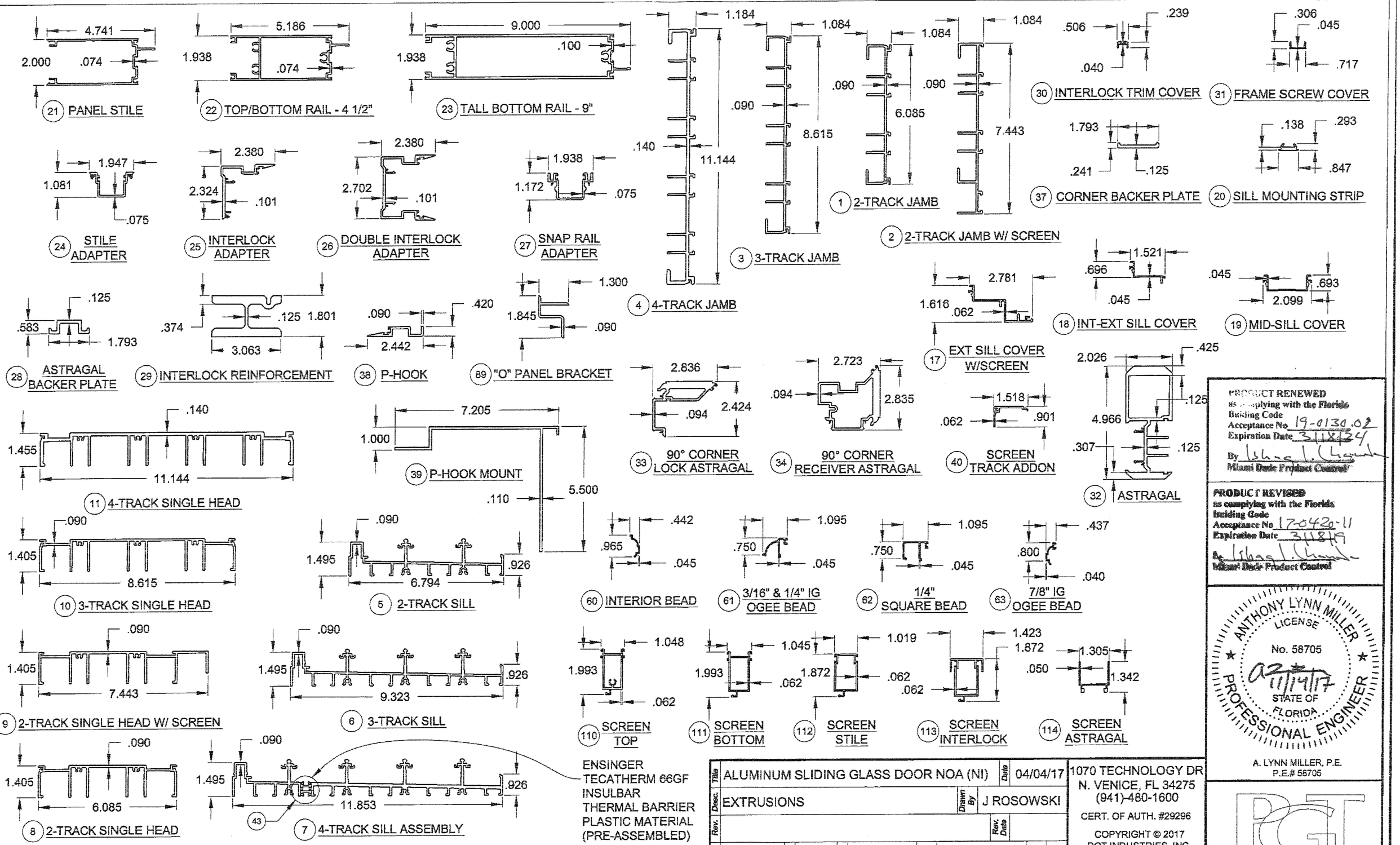

NOTES: 1) SEE SHEET 4 FOR SILL RISERS. ALL DIMENSIONS IN INCHES.

Title	ALUMINUM SLIDING GLASS DOOR NOA (NI)	Date	04/04/17
Desc.	EXTRUSIONS	Drawn By	J ROSOWSKI
Rev.		Rev. Date	
Series	SGD-680	Scale .25	Sheet 17 OF 18
DWG No.	MD-680.0	Rev. No.	

1070 TECHNOLOGY DR
N. VENICE, FL 34275
(941)-480-1600

CERT. OF AUTH. #29296

COPYRIGHT © 2017
PGT INDUSTRIES, INC.
ALL RIGHTS RESERVED

PRODUCT RENEWED
as complying with the Florida Building Code
Acceptance No. 19-0130.02
Expiration Date 3/18/24
By Ishaq I. Chanda
Miami Dade Product Control

PRODUCT REVISED
as complying with the Florida Building Code
Acceptance No. 17-0420.11
Expiration Date 3/18/19
By Ishaq I. Chanda
Miami Dade Product Control

ANTHONY LYNN MILLER
LICENSE
No. 58705
11/14/17
STATE OF FLORIDA
PROFESSIONAL ENGINEER

A. LYNN MILLER, P.E.
P.E.# 58705

PGT®

TABLE D:

Bill of Material			
#	Part #	Description	Material
1	8134	2-Track Jamb	6063 T6 Al
2	8135	2-Track Jamb with Screen Rail	6063 T6 Al
3	8133	3-Track Jamb	6063 T6 Al
4	8132	4-Track Jamb	6063 T6 Al
5	8118	2-Track Sill	6063 T6 Al
6	8116	3-Track Sill	6063 T6 Al
7	8120	4-Track Sill	6063 T6 Al
8	8127A	2-Track Head	6063 T6 Al
9	8128A	2-Track Head with Screen Rail	6063 T6 Al
10	8124A	3-Track Head	6063 T6 Al
11	8121A	4-Track Head	6063 T6 Al
12	8140	Sill Riser - 1-5/8"	6063 T6 Al
13	8139	Sill Riser - 2-3/4"	6063 T6 Al
14	8138	Sill Riser - 3-1/2"	6063 T6 Al
15	8137	Sill Riser - 4-1/2"	6063 T6 Al
16	8182	Sill Riser - 5-1/4"	6063 T6 Al
17	8119	Ext. Sill Cover with Screen Rail	6063 T6 Al
18	8117	Int-Ext. Sill Cover	6063 T6 Al
19	8115	Mid-Sill Cover	6063 T6 Al
20	8183	Sill Mounting Strip/Anchor Plate	6063 T6 Al
21	8012	Panel Stile	6063 T6 Al
22	8014C	Top/Bottom Rail	6063 T6 Al
23	8013C	9" Tall Bottom Rail	6063 T6 Al
24	8104	Stile Adaptor	6063 T6 Al
25	8102	Interlock Adaptor (Single)	6063 T6 Al
26	8101	Interlock Adaptor (Double)	6063 T6 Al
27	8103B	Top Snap Rail Adaptor	6063 T6 Al
28	8105	Astragal Backup Plate	6063 T6 Al
29	8192	Interlock Reinforcement	6105 T5 Al
30	8200	Interlock Screw Cover with T-slot	6063 T6 Al
31	8136	Frame Screw Cover	6063 T6 Al
32	8107C	Astragal	6063 T6 Al
33	8110	90° Corner Lock Astragal	6063 T6 Al
34	8111	90° Corner Astragal Receiver	6063 T6 Al
37	8112	90° Corner Astragal Backup Plate	6063 T6 Al
38	8108	Pocket Door P-Hook	6063 T6 Al
39	8109	Pocket Door P-Hook Mount	6063 T6 Al
40	8141	Screen Frame Add-on (Sill)	6063 T6 Al
41	8142A	Screen Frame Add-on (Head)	6063 T6 Al
42	8143A	Screen Track Addon	6063 T6 Al
43		Ensinger Insulbar Thermal Strut Profile #2310	Tecatherm 66GF
44	6TP248	Vinyl Bulb Weatherstrip @ Interlock	Flex PVC
45	6TP247	Vinyl Bulb Weatherstrip @ P-hook	Flex PVC
46	1644	.187" X .270" Weatherstrip	
50	7516X2LBOLTX	5/16" X 2" Lagbolt	SS
51	8197	Lagbolt Washer	SS
52	8153X	Tandem Roller Assembly	SS
53	8153N	Tandem Roller Assembly	Nylon
54	710X115PPX	#10" X 1-1/2" Ph. PH. SMS @ Roller	SS
55	947	Roller Adj. Hole Plug	PVC

TABLE D, CONTINUED:

Bill of Material			
#	Part #	Description	Material
60	8022	Interior Bead	6063 T5 Al
61	8144	3/16" & 1/4" Ogee Bead	6063 T6 Al
62	8147	1/4" Square Bead	6063 T6 Al
63	8024A	7/8" IG Ogee Bead	6063 T5 Al
67	6TP247	Vinyl Glazing Bulb	
68	1643	Foam-filled Glazing Bulb	Neoprene
69		Dow 899, 995 or Instantglaze Glazing Silicone	Silicone
70	8048	Setting Block, 1/2" X 4" X 1/8", 85 +/- 5 duro.	EPDM
71	8047	Setting Block, 1" X 4" X 1/8" (IG), 85 +/- 5 duro.	EPDM
80	710X34PPSDAX	#10 X 3/4" Ph. PH. SMS @ P-hook	SS
82	710X58PPTX	#8 X 5/8" Ph. PH. SMS @ Interlock	SS
83	710X115PPX	#10 X 1-1/2" Ph. PH. SMS @ Astragal	SS
84	781PQA	#8 X 1" PH. Quad. SMS @ Main frame	SS
85	72087K	Jamb Bumper	
86	76X38PPAX	#6 X .375" Ph. PH. SMS	SS
87	4385	4 Hole Bumper Stop	
88	78X38PPTX	#8 X 3/8" Ph. PH. SMS	Steel
89	8193A	"O" Panel Bracket - 12" long	6063 T6 Al
90	710X34PPSDAX	#10 X 3/4" Ph. PH. SMS @ Fixed "O" Bracket to Stile	SS
91	76X34PPSDAX	#8 X 3/4" Ph. FH. SMS @ Fixed "O" Bracket to Frame	SS
92	Varies	Handle Kit	Cast Zinc
93	8185X	Gemini Mortice Lock w/Long Trim Plate	SS
94	8184X	Gemini Mortice Lock w/Pocket Trim Plate	SS
95	71032X1FPFX	#10-32 X 1" Ph. FH. MS	Steel
96	7103239	#10-32 U-Nut	Steel
97	8186X	1" Mortice Keeper, Straight Configurations	SS
98	8187X	3/4" Mortice Keeper, 90° Corner	SS
99	710X115PFX	#10 X 1-1/2" Ph. FH. SMS @ Keeper	SS
101	1695	1-1/2" X 1" X 3/4" Finseal Dust Plug	
102	8175	Corner Astragal Seal	
103	1270	Open-cell Foam Pad (1/2" X 1-1/8")	
104	44432 W,B	Come-a-long	
105	1696	1-5/8" X 3/4" X 7/8" Finseal Dust Plug	
110	4317	Screen Top Rail	6063 T6 Al
111	4318	Screen Bottom Rail	6063 T6 Al
112	4319	Screen Side Rail/Lockstile	6063 T6 Al
113	8152	Screen Interlock Adapter	6063 T6 Al
114	4344	Screen Astragal	6063 T6 Al
115	7SRAZ	Roller	Nylon
116	7SRAX	Roller	SS
117		1/4" X 1" MS @ Top Rail	SS
118		1/4" X 1-1/2" MS @ Bottom Rail	SS
119		Screen Lockset	Steel
120	653	Screen Lock Keeper	Steel
121	1179	#10 X 3/4" Ph. PH. SMS @ Keeper	SS
122	1793	.270" X .150" Weatherstrip	
123	1692	Screen Spline - .165"	Vinyl
124		Screen Cloth	Fiberglass

NOTES:

1) ITEMS # 35, 36, 47-49, 56-59, 64-66, 76-79, 81, 100 & 106-109 ARE NOT USED AND ARE NOT PART OF THIS APPROVAL.
2) SEE SHEET 12 FOR ITEMS # 72-75.

Title	ALUMINUM SLIDING GLASS DOOR NOA (NI)			Date	04/04/17
Desc.	PARTS LIST			Drawn By	J ROSOWSKI
Rev.				Rev. Date	
Series	SGD-680	Scale NTS	Sheet 18 OF 18	DWG No. MD-680.0	Rev. No.

1070 TECHNOLOGY DR
N. VENICE, FL 34275
(941)-480-1600
CERT. OF AUTH. #29296

COPYRIGHT © 2017
PGT INDUSTRIES, INC.
ALL RIGHTS RESERVED

PRODUCT RENEWED
as complying with the Florida Building Code
Acceptance No. 19-0130.02
Expiration Date MAR 18, 2024
By Ishaq I. Chanda
Miami Dade Product Control

PRODUCT REVISED
as complying with the Florida Building Code
Acceptance No. 17-0420.11
Expiration Date MAR 18, 2019
By Ishaq I. Chanda
Miami Dade Product Control

ANTHONY LYNN MILLER
LICENSE
No. 58705
11/14/17
STATE OF FLORIDA
PROFESSIONAL ENGINEER

A. LYNN MILLER, P.E.
P.E.# 58705