MIAMI-DADE COUNTY
PRODUCT CONTROL SECTION
11805 SW 26 Street, Room 208
Miami, Florida 33175-2474
T (786) 315-2590 F (786) 315-2599
www.miamidade.gov/building

DEPARTMENT OF REGULATORY AND ECONOMIC RESOURCES (RER)
BOARD AND CODE ADMINISTRATION DIVISION

NOTICE OF ACCEPTANCE (NOA)

RC Home Showcase, Inc.
16115 NW 52nd Avenue
Miami, FL 33014

SCOPE:

This NOA is being issued under the applicable rules and regulations governing the use of construction materials. The documentation submitted has been reviewed and accepted by Miami-Dade County RER - Product Control Section to be used in Miami Dade County and other areas where allowed by the Authority Having Jurisdiction (AHJ).

This NOA shall not be valid after the expiration date stated below. The Miami-Dade County Product Control Section (In Miami-Dade County) and/ or the AHJ (in areas other than Miami-Dade County) reserve the right to have this product or material tested for quality assurance purposes. If this product or material fails to perform in the accepted manner, the manufacturer will incur the expense of such testing and the AHJ may immediately revoke, modify, or suspend the use of such product or material within their jurisdiction. RER reserves the right to revoke this acceptance, if it is determined by Miami-Dade County Product Control Section that this product or material fails to meet the requirements of the applicable building code.

This product is approved as described herein, and has been designed to comply with the Florida Building Code, including the High Velocity Hurricane Zone.-

DESCRIPTION: Series "FX-075" Aluminum Fixed Window – L.M.I.

APPROVAL DOCUMENT: Drawing No. **W13-64**, titled "Series FX075 Aluminum Fixed Wdw. (L.M.I.)", sheets 1 through 7 of 7, dated 12/06/13, with revision **A** dated 03/12/18, prepared by Al-Farooq Corporation, signed and sealed by Javad Ahmad, P.E., bearing the Miami-Dade County Product Control Renewal stamp with the Notice of Acceptance number and expiration date by the Miami-Dade County Product Control Section.

MISSILE IMPACT RATING: Large and Small Missile Impact Resistant

LABELING: Each unit shall bear a permanent label with the manufacturer's name or logo, city, state, series, and following statement: "Miami-Dade County Product Control Approved", unless otherwise noted herein.

RENEWAL of this NOA shall be considered after a renewal application has been filed and there has been no change in the applicable building code negatively affecting the performance of this product.

TERMINATION of this NOA will occur after the expiration date or if there has been a revision or change in the materials, use, and/ or manufacture of the product or process. Misuse of this NOA as an endorsement of any product, for sales, advertising or any other purposes shall automatically terminate this NOA. Failure to comply with any section of this NOA shall be cause for termination and removal of NOA.

ADVERTISEMENT: The NOA number preceded by the words Miami-Dade County, Florida, and followed by the expiration date may be displayed in advertising literature. If any portion of the NOA is displayed, then it shall be done in its entirety.

INSPECTION: A copy of this entire NOA shall be provided to the user by the manufacturer or its distributors and shall be available for inspection at the job site at the request of the Building Official.

This NOA **renews NOA No. 18-0418.03** and consists of this page 1 and evidence pages E-1, E-2 and E-3, as well as approval document mentioned above.

The submitted documentation was reviewed by **Manuel Perez, P.E.**

MIAMI-DADE COUNTY APPROVED

3/29/19

RC Home Showcase, Inc.

NOTICE OF ACCEPTANCE: EVIDENCE SUBMITTED

1. EVIDENCE SUBMITTED UNDER PREVIOUS NOA's

A. DRAWINGS

1. Manufacturer's die drawings and sections.
   (Submitted under NOA No. 12-1003.03)
2. Drawing No. **W13-64**, titled "Series FX075 Aluminum Fixed Wdw. (L.M.I.)", sheets 1 through 7 of 7, dated 12/06/13, with revision **A** dated 03/12/18, prepared by Al-Farooq Corporation, signed and sealed by Javad Ahmad, P.E.

B. TESTS

1. Test reports on: 1) Air Infiltration Test, per FBC, TAS 202-94
   2) Uniform Static Air Pressure Test, Loading per FBC, TAS 202-94
   3) Water Resistance Test, per FBC, TAS 202-94
   4) Large Missile Impact Test per FBC, TAS 201-94
   5) Cyclic Wind Pressure Loading per FBC, TAS 203-94
   6) Forced Entry Test, per FBC 2411.3.2.1, and TAS 202-94

   along with marked-up drawings and installation diagram of a casement, projected and fixed window, prepared by Fenestration Testing Laboratory, Inc., Test Report No. **FTL-6605**, dated 04/18/12, signed and sealed by Marlin D. Brinson, P.E.
   (Submitted under NOA No. 12-1003.03)

C. CALCULATIONS

1. Anchor verification calculations complying with **FBC 6th Edition (2017)**, dated 02/21/2018, prepared by Al-Farooq Corporation, signed and sealed by Javad Ahmad, P.E.
   (Submitted under NOA No. 18-0418.03)
2. Glazing complies with **ASTM E1300-04**

D. QUALITY ASSURANCE

1. Miami-Dade Department of Regulatory and Economic Resources (RER).

E. MATERIAL CERTIFICATIONS

1. NOA No. **17-1114.14** issued to **Kuraray America, Inc.** for their "**Trosifol® Ultraclear, Clear and Color PVB Glass Interlayers**" dated 01/18/18, expiring on 07/08/19.

Manuel Perez

Manuel Perez, P.E.
Product Control Examiner
NOA No. 19-0219.06
Expiration Date: April 10, 2024
Approval Date: April 11, 2019

NOTICE OF ACCEPTANCE: EVIDENCE SUBMITTED

F. STATEMENTS

1. Statement letter of conformance, complying with **FBC 6th Edition (2017),** and of no financial interest, dated February 21, 2018, issued by Al-Farooq Corporation, signed and sealed by Javad Ahmad, P.E.
   (Submitted under NOA No. 18-0418.03)
2. Laboratory compliance letter for Test Report No. **FTL-6605**, issued by Fenestration Testing Laboratory, Inc., dated 04/18/12, signed and sealed by Marlin D. Brinson, P.E.
   (Submitted under NOA No. 14-0128.08)
3. Proposal issued by Product Control, dated 09/30/11, with the latest revision, dated 12/19/11, signed by Jaime D. Gascon, P.E.
   (Submitted under NOA No. 14-0128.08)

G. OTHERS

1. Notice of Acceptance No. **14-0128.08**, issued to RC Home Showcase, Inc. for their Series "FX075" Aluminum Window Wall System - S.M.I., approved on 04/10/14 and expiring on 04/10/19.

Manuel Perez, P.E.
Product Control Examiner
NOA No. 19-0219.06
Expiration Date: April 10, 2024
Approval Date: April 11, 2019

NOTICE OF ACCEPTANCE: EVIDENCE SUBMITTED

2. NEW EVIDENCE SUBMITTED

A. DRAWINGS

1. None.

B. TESTS

1. None

C. CALCULATIONS

1. None.

D. QUALITY ASSURANCE

1. Miami-Dade Department of Regulatory and Economic Resources (RER)

E. MATERIAL CERTIFICATIONS

1. Notice of Acceptance No. **17-1114.14** issued to **Kuraray America, Inc.** for their "**Trosifol® Ultraclear, Clear and Color PVB Glass Interlayers**" dated 01/18/18, expiring on 07/08/19.

F. STATEMENTS

1. None.

G. OTHERS

1. Notice of Acceptance No. **18-0418.03**, issued to RC Home Showcase, Inc. for their Series "FX075" Aluminum Fixed Window - L.M.I., approved on 05/24/18 and expiring on 04/10/19.

Manuel Perez, P.E.
Product Control Examiner
NOA No. 19-0219.06
Expiration Date: April 10, 2024
Approval Date: April 11, 2019

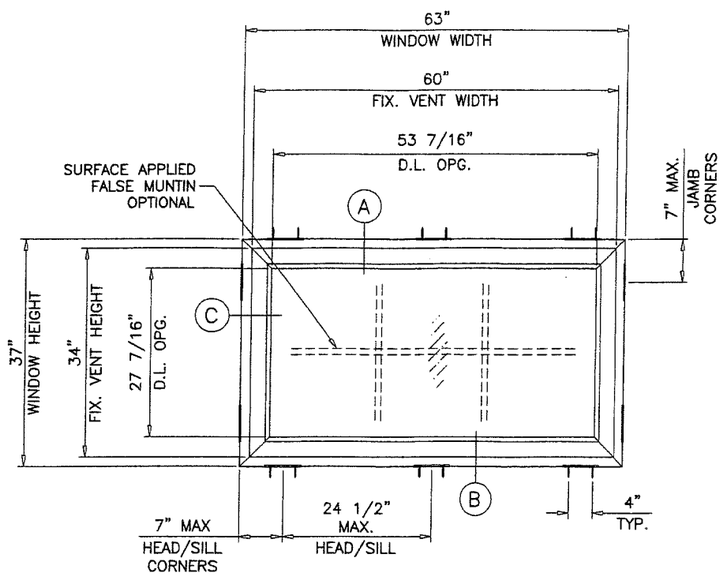

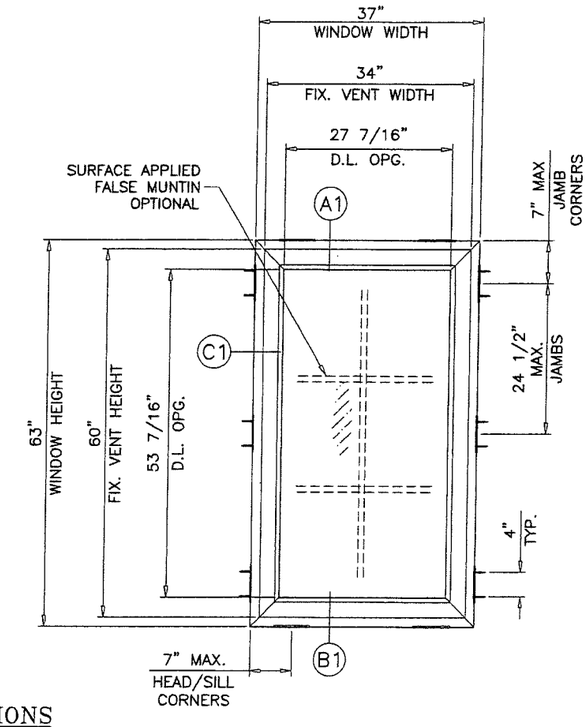

TYPICAL ELEVATIONS

SERIES FX075 ALUMINUM FIXED WINDOW

DESIGN LOAD RATING FOR THESE WINDOWS TO BE AS PER CHARTS SHOWN ON SHEET 2.

APPROVAL APPLIES TO SINGLE UNITS OR SIDE BY SIDE COMBINATIONS OF FIXED/FIXED OR FIXED WITH OTHER MIAMI-DADE COUNTY APPR'D WINDOWS USING MIAMI-DADE COUNTY APPROVED MULLIONS IN BETWEEN.

LOWER DESIGN PRESSURE FROM WINDOWS OR MULLION APPROVAL WILL APPLY TO ENTIRE SYSTEM.

THIS PRODUCT HAS BEEN DESIGNED AND TESTED TO COMPLY WITH THE REQUIREMENTS OF THE 2017 (6TH EDITION) FLORIDA BUILDING CODE INCLUDING HIGH VELOCITY HURRICANE ZONE (HVHZ).

1BY OR 2BY WOOD BUCKS & BUCK FASTENERS BY OTHERS, MUST BE DESIGNED AND INSTALLED ADEQUATELY TO TRANSFER APPLIED PRODUCT LOADS TO THE BUILDING STRUCTURE.

ANCHORS SHALL BE CORROSION RESISTANT, SPACED AS SHOWN ON DETAILS AND INSTALLED PER MANUF'S INSTRUCTIONS. SPECIFIED EMBEDMENT TO BASE MATERIAL SHALL BE BEYOND WALL DRESSING OR STUCCO.

A LOAD DURATION INCREASE IS USED IN DESIGN OF ANCHORS INTO WOOD ONLY.

ALL SHIMS TO BE HIGH IMPACT, NON-METALLIC AND NON-COMPRESSIBLE.

MATERIALS INCLUDING BUT NOT LIMITED TO STEEL/METAL SCREWS, THAT COME INTO CONTACT WITH OTHER DISSIMILAR MATERIALS SHALL MEET THE REQUIREMENTS OF THE 2017 FLORIDA BLDG. CODE & ADOPTED STANDARDS.

THIS PRODUCT APPROVAL IS GENERIC AND DOES NOT PROVIDE INFORMATION FOR A SITE SPECIFIC PROJECT, i.e. LIFE SAFETY OF THIS PRODUCT, ADEQUACY OF STRUCTURE RECEIVING THIS PRODUCT AND SEALING AROUND OPENING FOR WATER INFILTRATION RESISTANCE ETC.
CONDITIONS NOT SHOWN IN THIS DRAWING ARE TO BE ANALYZED SEPARATELY, AND TO BE REVIEWED BY BUILDING OFFICIAL.

THESE WINDOWS ARE RATED FOR LARGE & SMALL MISSILE IMPACT. SHUTTERS ARE NOT REQUIRED.

PRODUCT RENEWED
as complying with the Florida
Building Code
Acceptance No. 19-0219.06
Expiration Date Apr. 10, 2024
By Manuel Perez
Miami Dade Product Control

PRODUCT REVISED
as complying with the Florida
Building Code
Acceptance No. 18-0418.03
Expiration Date 04/10/2019
By
Miami Dade Product Control

JAVAD AHMAD
LICENSE
No. 70592
Apr 5,2018
STATE OF FLORIDA
PROFESSIONAL ENGINEER

AL-FAROOQ CORPORATION
ENGINEERS & PRODUCT DEVELOPMENT
9360 SUNSET DRIVE, SUITE 220
MIAMI, FLORIDA 33173 (C.A.N. 3538)
TEL. (305) 264-8100 FAX. (305) 262-6978

COMP-ANL\W13-64RC

SERIES FX075 ALUMINUM FIXED WDW. (L.M.I.)

RC Home Showcase, Inc.
16115 NW 52nd Ave.
Miami, FL. 33014
TEL. (305) 392-6214 FAX. (305) 260-6432

revisions:			
no	date	by	description
A	03.12.18		UPDATED TO 2017 FBC

date: 12-06-13
scale: 1/2"=1'-0"
dr. by: TARIQ
chk. by:

drawing no.
W13-64

DESIGN LOAD CAPACITY - PSF			
WINDOW DIMS.		GLASS TYPES 'A' & 'B'	
WIDTH	LENGTH	EXT.(+)	INT.(−)
19-1/8"	38-3/8"	85.0	85.0
24"		85.0	85.0
26-1/2"		85.0	85.0
30"		85.0	85.0
37"		85.0	85.0
42"		85.0	85.0
48"		85.0	85.0
53-1/8"		85.0	85.0
19-1/8"	48"	85.0	85.0
24"		85.0	85.0
26-1/2"		85.0	85.0
30"		85.0	85.0
37"		85.0	85.0
42"		85.0	85.0
48"		85.0	85.0
19-1/8"	50-5/8"	85.0	85.0
24"		85.0	85.0
26-1/2"		85.0	85.0
30"		85.0	85.0
37"		85.0	85.0
42"		85.0	85.0
19-1/8"	60"	85.0	85.0
24"		85.0	85.0
26-1/2"		85.0	85.0
30"		85.0	85.0
37"		85.0	85.0
19-1/8"	63"	85.0	85.0
24"		85.0	85.0
26-1/2"		85.0	85.0
30"		85.0	85.0
37"		85.0	85.0
19-1/8"	66"	85.0	85.0
24"		85.0	85.0
26-1/2"		85.0	85.0
30"		85.0	85.0
19-1/8"	72"	85.0	85.0
24"		85.0	85.0
26-1/2"		85.0	85.0
30"		85.0	85.0
19-1/8"	74-1/4"	85.0	85.0
24"		85.0	85.0
26-1/2"		85.0	85.0

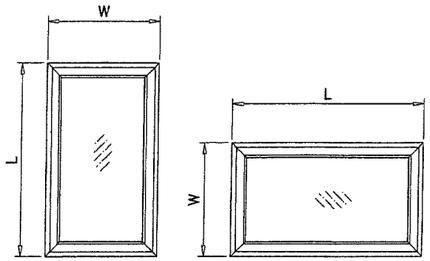

NOTE:
WIDTH AND LENGTH DIMENSIONS CAN BE ORIENTED VERTICALLY OR HORIZONTALLY AS SHOWN ABOVE.

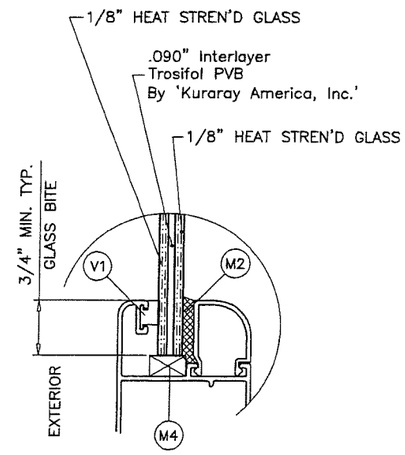

GLASS TYPE 'A'

5/16" NOM. OVERALL THK.

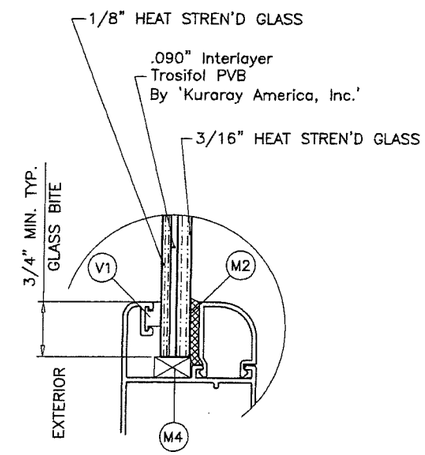

GLASS TYPE 'B'

3/8" NOM. OVERALL THK.

GLAZING OPTIONS

NOTE:
GLASS CAPACITIES ON THIS SHEET ARE BASED ON ASTM E1300-09 (3 SEC. GUSTS).

PRODUCT RENEWED
as complying with the Florida Building Code
Acceptance No. 19-0219.06
Expiration Date April 10, 2024
By Manuel Perez
Miami Dade Product Control

PRODUCT REVISED
as complying with the Florida Building Code
Acceptance No. 18-0418.03
Expiration Date 04/10/2019
By
Miami Dade Product Control

JAVAD AHMAD
LICENSE
No. 70592
Apr 5,2018
STATE OF FLORIDA
PROFESSIONAL ENGINEER

AL-FAROOQ CORPORATION
ENGINEERS & PRODUCT DEVELOPMENT
9360 SUNSET DRIVE, SUITE 220
MIAMI, FLORIDA 33173 (C.A.N. 3538)
TEL. (305) 264-8100 FAX. (305) 262-6978

COMP-ANL\W13-64RC

SERIES FX075 ALUMINUM FIXED WDW. (L.M.I.)

RC Home Showcase, Inc.
16115 NW 52nd Ave.
Miami, FL. 33014
TEL. (305) 392-6214 FAX. (305) 260-6432

revisions:

no	date	by	description
A	03.12.18		UPDATED TO 2017 FBC

date: 12-06-13
scale: 1/2" = 1"
dr. by: TARIQ
chk. by:

drawing no.
W13-64

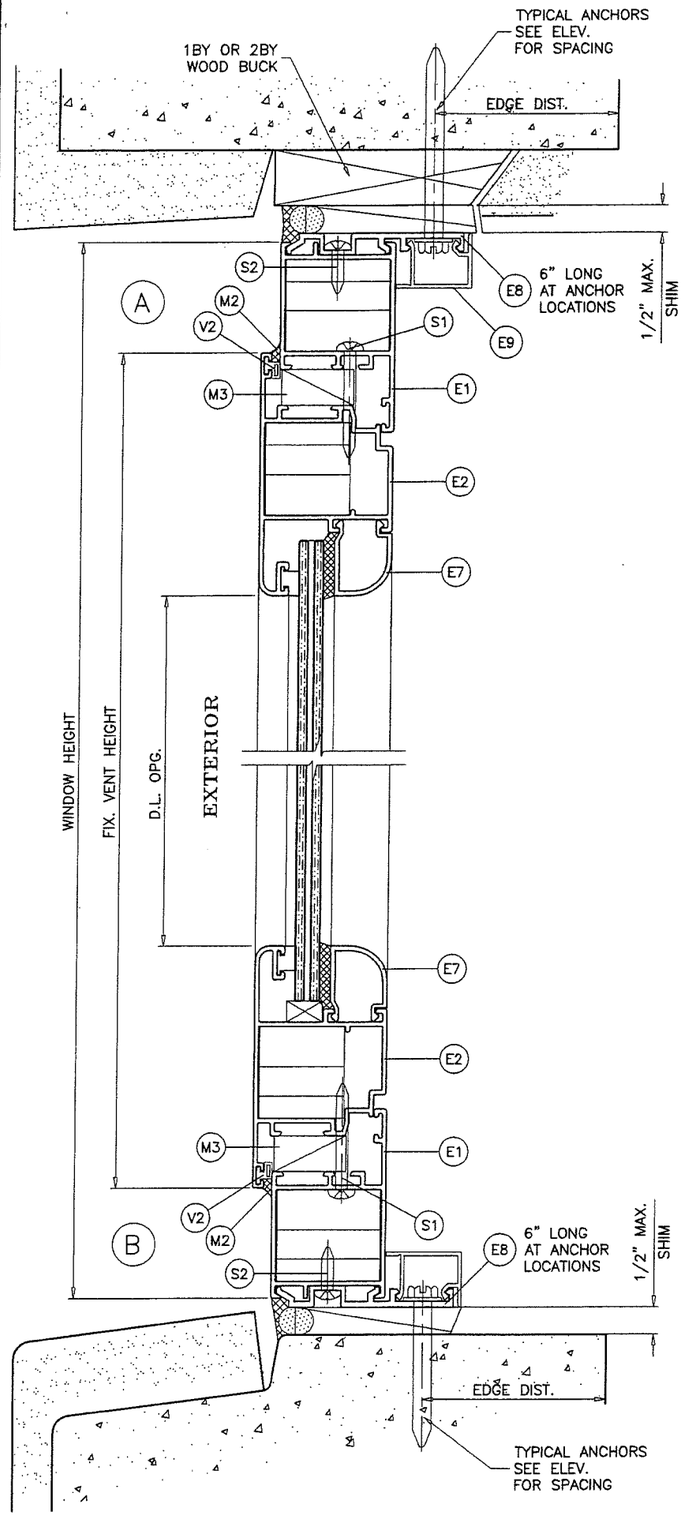

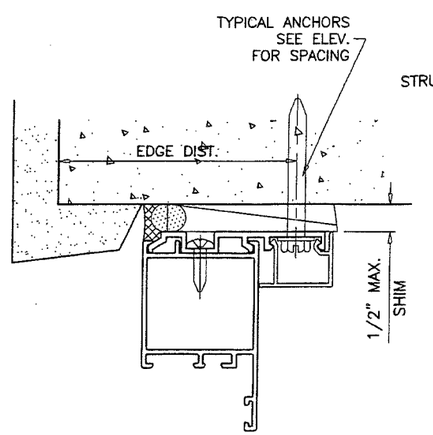

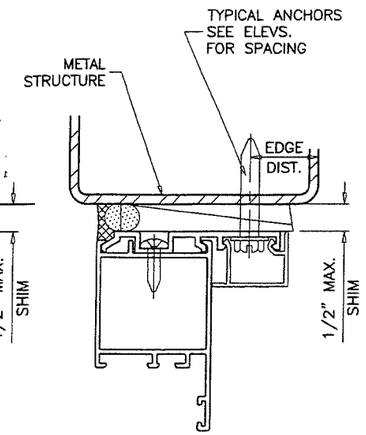

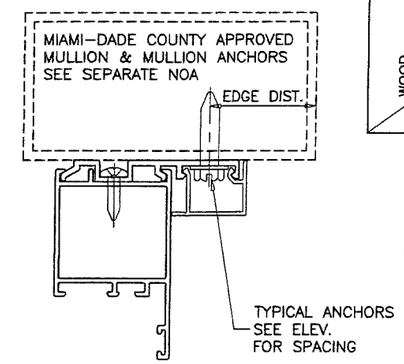

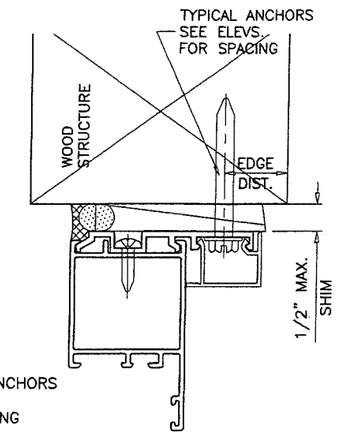

WOOD BUCKS AND METAL STRUCTURE NOT BY RC HOME SHOWCASE MUST SUSTAIN LOADS IMPOSED BY GLAZING SYSTEM AND TRANSFER THEM TO THE BUILDING STRUCTURE.

SEALANTS:

ALL FRAME AND VENT CORNERS SEALED WITH SILICONE.

TYPICAL ANCHORS: SEE ELEV. FOR SPACING

1/4" DIA. KWIK-CON II BY 'HILTI' (Fu=138 KSI, Fy=137 KSI)
1/4" DIA. ULTRACON BY 'ELCO' (Fu=177 KSI, Fy=155 KSI)

INTO WOOD STRUCTURES
2" MIN. PENETRATION INTO WOOD (HEAD/SILL/JAMBS)

THRU 1BY OR 2BY BUCKS INTO CONC. OR BLOCKS
1-1/2" MIN. EMBED INTO CONCRETE (HEAD/SILL/JAMBS)
1-1/2" MIN. EMBED INTO GROUT-FILLED BLOCKS (JAMBS)

DIRECTLY INTO CONCRETE OR BLOCKS
2" MIN. EMBED INTO CONCRETE (HEAD/SILL/JAMBS)
2" MIN. EMBED INTO GROUT-FILLED BLOCKS (JAMBS)

1/4" DIA. TEKS OR SELF-DRILLING SCREWS (GRADE 5 CRS)
INTO MIAMI-DADE COUNTY APPROVED MULLIONS
OR
INTO METAL STRUCTURES (HEAD/SILL/JAMBS)
(3) THREADS MIN. TO EXTEND BEYOND METAL THICKNESS
ALUMINUM: 1/8" THK. MIN. (6063-T5 MIN.)
STEEL: 1/8" THK. MIN. (Fy = 36 KSI MIN.)
(STEEL IN CONTACT WITH ALUMINUM TO BE PLATED OR PAINTED)

CRITICAL EDGE DISTANCE
INTO CONCRETE AND BLOCKS = 1-1/2" MIN.
INTO WOOD STRUCTURE = 1" MIN.
INTO METAL STRUCTURE = 3/4" MIN.

WOOD AT HEAD, SILL OR JAMBS SG = 0.55 MIN.
CONCRETE AT HEAD, SILL OR JAMBS f'c = 3000 PSI MIN.
C-90 HOLLOW/FILLED BLOCK AT JAMBS f'm = 2000 PSI MIN.

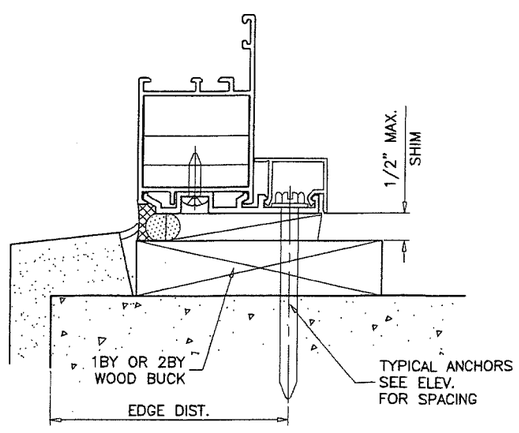

PRODUCT RENEWED
as complying with the Florida
Building Code
Acceptance No. 19-0219.06
Expiration Date April 10, 2024
By Manuel Perez
Miami Dade Product Control

PRODUCT REVISED
as complying with the Florida
Building Code
Acceptance No. 18-0418.03
Expiration Date 04/10/2019
By
Miami Dade Product Control

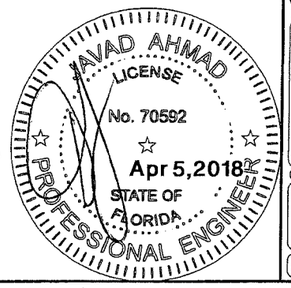

AL-FAROOQ CORPORATION
ENGINEERS & PRODUCT DEVELOPMENT
9360 SUNSET DRIVE, SUITE 220
MIAMI, FLORIDA 33173 (C.A.N. 3538)
TEL. (305) 264-8100 FAX. (305) 262-6978

COMP-ANL\W13-64RC

SERIES FX075 ALUMINUM FIXED WDW. (L.M.I.)

RC Home Showcase, Inc.
16115 NW 52nd Ave.
Miami, FL. 33014
TEL. (305) 392-6214 FAX. (305) 260-6432

revisions:			
no	date	by	description
A	03.12.18		UPDATED TO 2017 FBC

date: 12-06-13
scale: 1/2" = 1"
dr. by: TARIQ
chk. by:

drawing no.
W13-64

sheet 3 of 7

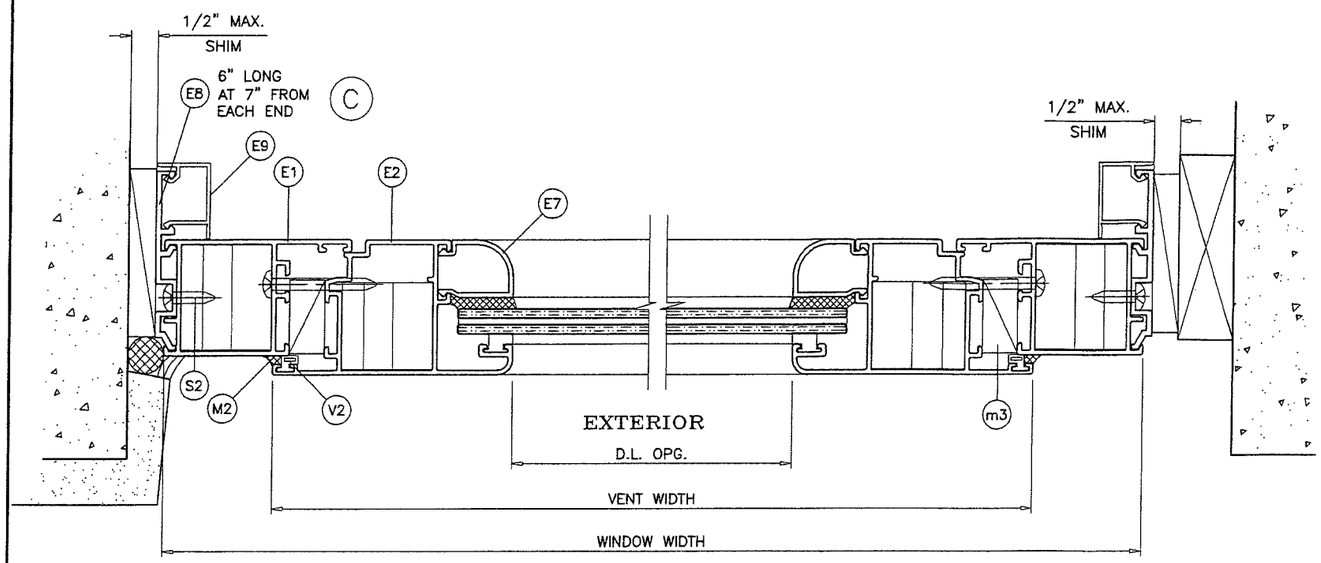

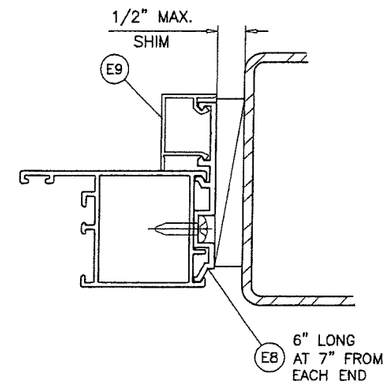

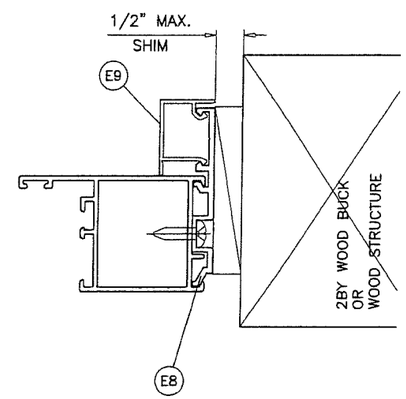

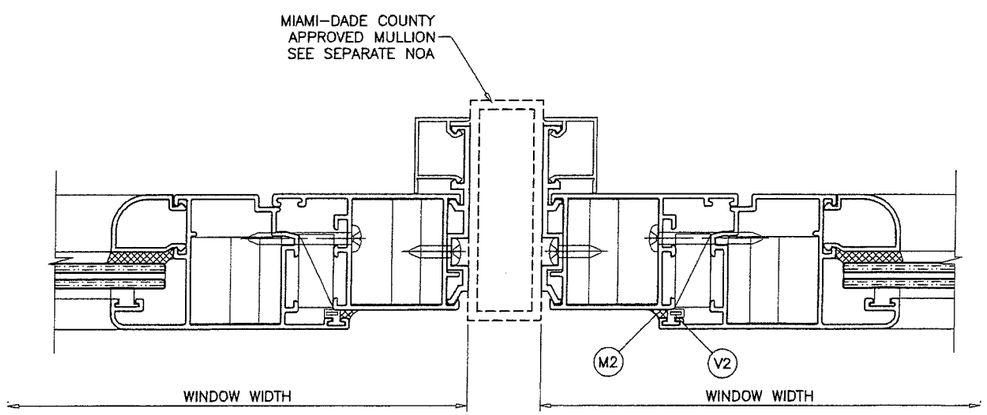

PRODUCT RENEWED
as complying with the Florida
Building Code
Acceptance No. 19-0219.06
Expiration Date April 10, 2024
By Manuel Perez
Miami Dade Product Control

PRODUCT REVISED
as complying with the Florida
Building Code
Acceptance No. 18-0418.03
Expiration Date 04/10/2019
By
Miami Dade Product Control

JAWAD AHMAD
LICENSE
No. 70592
Apr 5,2018
STATE OF
FLORIDA
PROFESSIONAL ENGINEER

AL-FAROOQ CORPORATION
ENGINEERS & PRODUCT DEVELOPMENT
9360 SUNSET DRIVE, SUITE 220
MIAMI, FLORIDA 33173 (C.A.N. 3538)
TEL. (305) 264-8100 FAX. (305) 262-6978

COMP-ANL\W13-64RC

SERIES FX075 ALUMINUM FIXED WDW. (L.M.I.)

RC Home Showcase, Inc.
16115 NW 52nd Ave.
Miami, FL. 33014
TEL. (305) 392-6214 FAX. (305) 260-6432

revisions:

no	date	by	description
A	03.12.18		UPDATED TO 2017 FBC

date: 12-06-13
scale: 1/2" = 1"
dr. by: TARIQ
chk. by:

drawing no.
W13-64

sheet 4 of 7

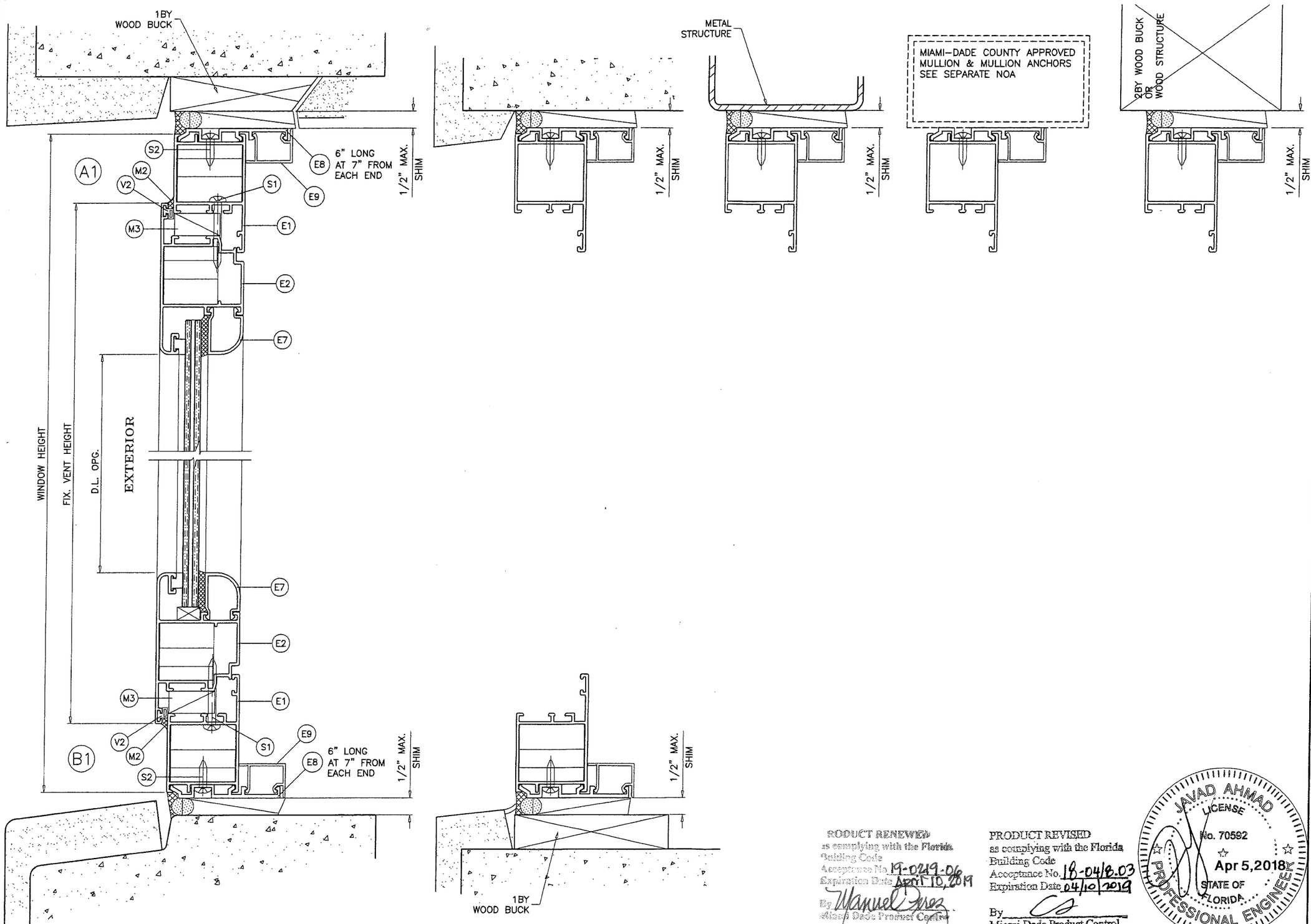

PRODUCT RENEWED
as complying with the Florida
Building Code
Acceptance No. 19-0219.06
Expiration Date April 10, 2019
By Manuel Perez
Miami Dade Product Control

PRODUCT REVISED
as complying with the Florida
Building Code
Acceptance No. 18-0418.03
Expiration Date 04/10/2019
By
Miami Dade Product Control

JAVAD AHMAD
LICENSE
No. 70592
Apr 5,2018
STATE OF
FLORIDA
PROFESSIONAL ENGINEER

AL-FAROOQ CORPORATION
ENGINEERS & PRODUCT DEVELOPMENT
9360 SUNSET DRIVE, SUITE 220
MIAMI, FLORIDA 33173 (C.A.N. 3538)
TEL. (305) 264-8100 FAX. (305) 262-6978

COMP-ANL\W13-64RC

SERIES FX075 ALUMINUM FIXED WDW. (L.M.I.)

RC Home Showcase, Inc.
16115 NW 52nd Ave.
Miami, FL. 33014
TEL. (305) 392-6214 FAX. (305) 260-6432

revisions:

no	date	by	description
A	03.12.18		UPDATED TO 2017 FBC

date: 12-06-13
scale: 1/2" = 1"
dr. by: TARIQ
chk. by:

drawing no.
W13-64

sheet 5 of 7

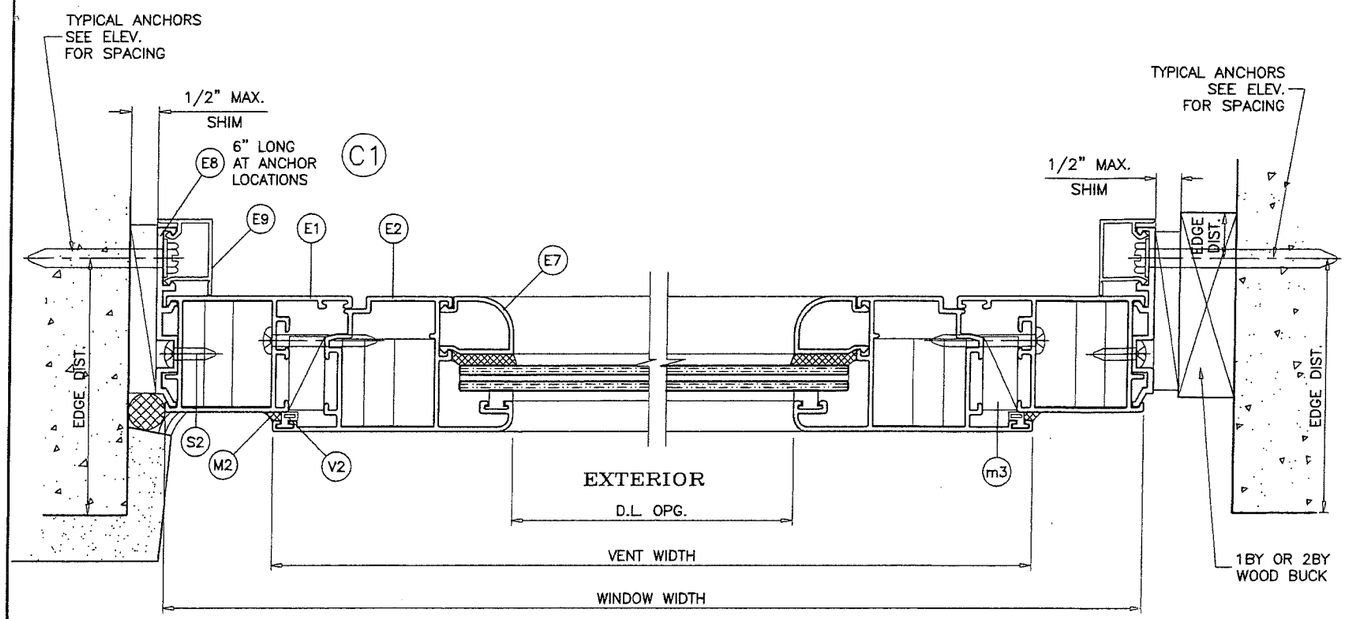

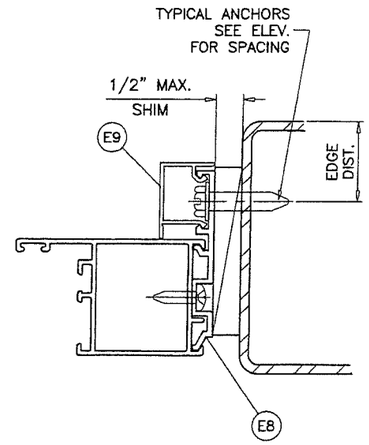

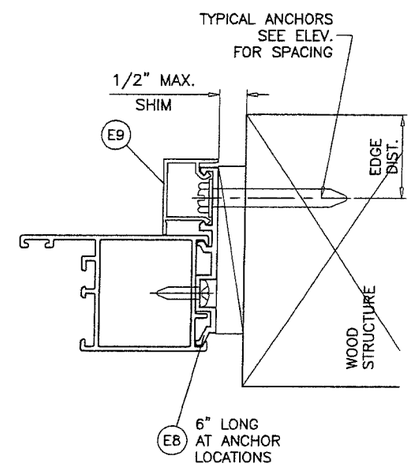

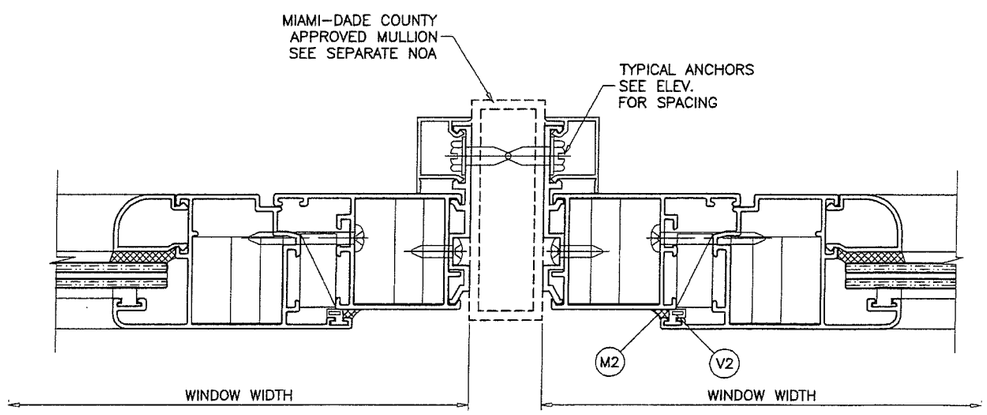

PRODUCT RENEWED
as complying with the Florida
Building Code
Acceptance No. 19-0219.06
Expiration Date April 10, 2024
By Manuel Díaz
Miami Dade Product Control

PRODUCT REVISED
as complying with the Florida
Building Code
Acceptance No. 18-0418.03
Expiration Date 04/10/2019
By
Miami Dade Product Control

JAVAD AHMAD
LICENSE
No. 70592
Apr 5,2018
STATE OF
FLORIDA
PROFESSIONAL ENGINEER

AL-FAROOQ CORPORATION
ENGINEERS & PRODUCT DEVELOPMENT
9360 SUNSET DRIVE, SUITE 220
MIAMI, FLORIDA 33173 (C.A.N. 3538)
TEL. (305) 264-8100 FAX. (305) 262-6978

COMP-ANL\W13-64RC

SERIES FX075 ALUMINUM FIXED WDW. (L.M.I.)

RC Home Showcase, Inc.
16115 NW 52nd Ave.
Miami, FL. 33014
TEL. (305) 392-6214 FAX. (305) 260-6432

revisions:

no	date	by	description
A	03.12.18		UPDATED TO 2017 FBC

date: 12-06-13
scale: 1/2" = 1"
dr. by: TARIQ
chk. by:

drawing no.
W13-64

sheet 6 of 7

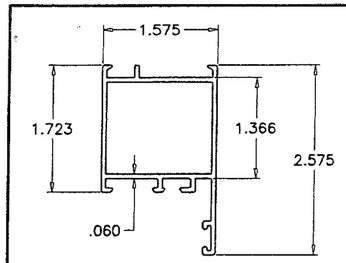

FRAME
HEAD/SILL/JAMB
(E1)

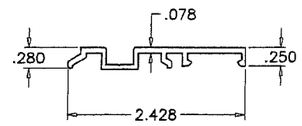

(E8) INSTALLATION FRAME ADAPTER

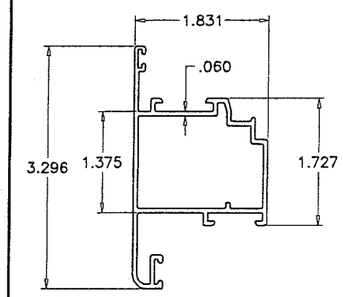

VENT
HEAD/SILL/JAMB
(E2)

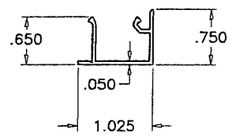

(E9) SNAP COVER

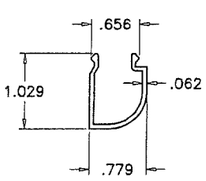

(E7) GLAZING BEAD

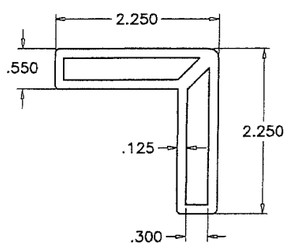

(E5) CORNER LOCK ADAPTER

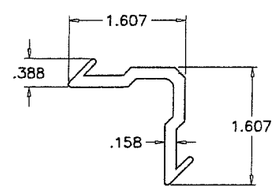

(E4) CORNER LOCK

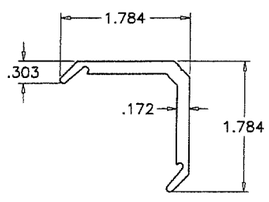

(E3) CORNER LOCK MALE

ITEM	PART #	QUANTITY	DESCRIPTION	MATERIAL	MANF./SUPPLIER/REMARKS
E1	CM075–001	4	FRAME HEAD/ SILL/ JAMBS 3709 FISA	6063–T6	–
E2	CM075–002	4	VENT HEAD/ SILL/ JAMBS 3707 FISA	6063–T6	–
E3	CM075–007	AS REQD.	FRAME & VENT CORNER LOCK MALE 3550 FISA	6063–T6	–
E4	CM075–004	AS REQD.	FRAME & VENT CORNER LOCK 3551 FISA	6063–T6	–
E5	CM075–005	AS REQD.	FRAME & VENT CORNER LOCK ADAPTOR 1338	6063–T6	–
E7	FXQ75–003	4	GLAZING BEAD	6063–T6	–
E8	FX075–001	AS REQD.	INSTALLATION FRAME ADAPTER, 6" LONG	6063–T6	–
E9	500Y–010	AS REQD.	SNAP COVER	6063–T6	–
V1	V–101	AS REQD.	SQUARE VINYL TPE MELTPOINT, DUROMETER 70±5	TPE	MELTPOINT
V2	V–059	AS REQD.	EXTERIOR W'STRIP VINYL	TPE	DUROMETER 70±5 SHORE A
M1	DOW– 791	AS REQD.	WHITE SILICONE FOR ASSEMBLY	–	–
M2	DOW– 791	AS REQD.	BLACK SILICONE FOR GLAZING	–	–
M3		AS REQD.	1/2" X 1" X 4" LONG SHIM	EPDM	DUROMETER 75±5 SHORE A
M4		2/ LITE	1/4" X 1/2" X 4" LONG T.P.E. SETTING BLOCK	EPDM	DUROMETER 75±5 SHORE A
S1		4/ WDW.	#10 X 1–1/2" PH SMS	ST/ST	AT 7" FROM EACH END
S2		2/ CLIP	#10 X 3/4" PH SMS	ST/ST	–

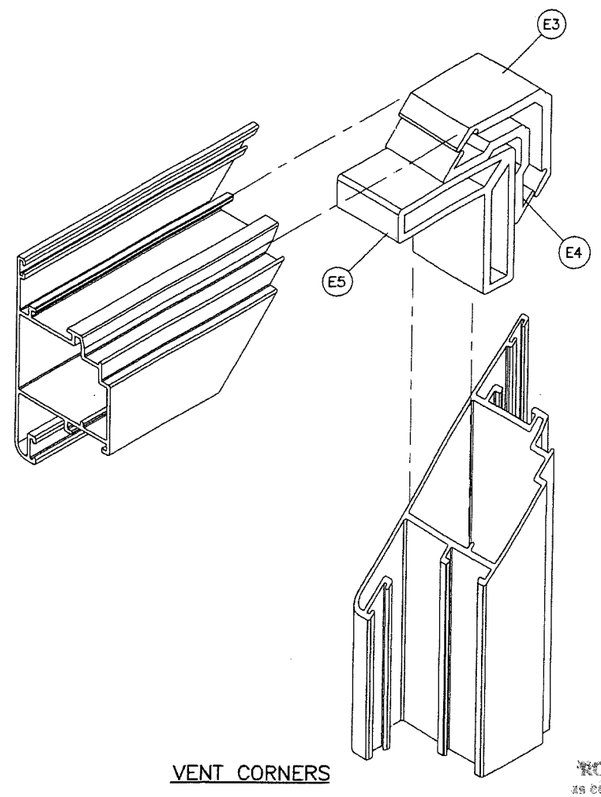

VENT CORNERS

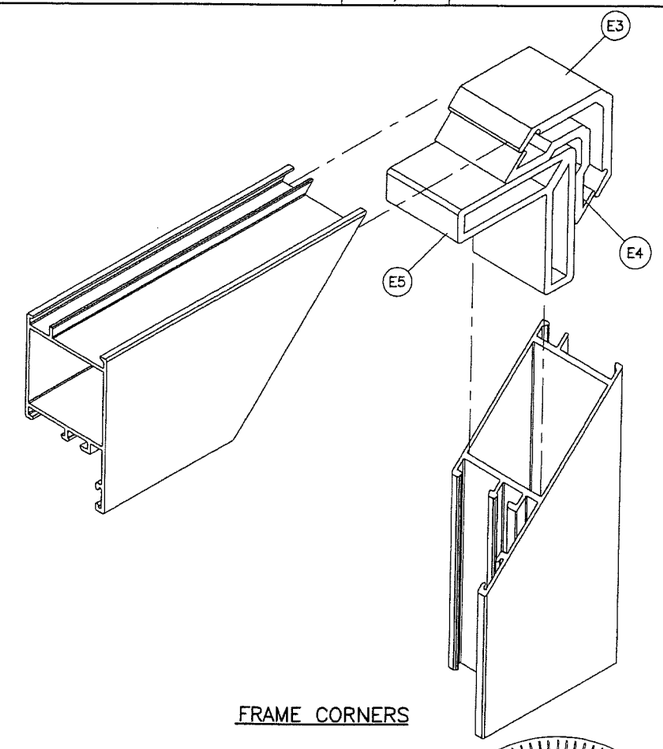

FRAME CORNERS

PRODUCT RENEWED
as complying with the Florida
Building Code
Acceptance No. 19-0219.06
Expiration Date April 10, 2024
By Manuel Sosa
Miami Dade Product Control

PRODUCT REVISED
as complying with the Florida
Building Code
Acceptance No. 18-0418.03
Expiration Date 04/10/2019
By
Miami Dade Product Control

JAVAD AHMAD
LICENSE
No. 70592
Apr 5,2018
STATE OF FLORIDA
PROFESSIONAL ENGINEER

AL-FAROOQ CORPORATION
ENGINEERS & PRODUCT DEVELOPMENT
9360 SUNSET DRIVE, SUITE 220
MIAMI, FLORIDA 33173 (C.A.N. 3538)
TEL. (305) 264-8100 FAX. (305) 262-6978

COMP–ANL\W13–64RC

SERIES FX075 ALUMINUM FIXED WDW. (L.M.I.)

RC Home Showcase, Inc.
16115 NW 52nd Ave.
Miami, FL. 33014
TEL. (305) 392–6214 FAX. (305) 260–6432

revisions:

no	date	by	description
A	03.12.18		UPDATED TO 2017 FBC

date: 12–06–13
scale: 1/2" = 1"
dr. by: TARIQ
chk. by:

drawing no.
W13–64

sheet 7 of 7