MIAMI-DADE COUNTY
PRODUCT CONTROL SECTION
11805 SW 26 Street, Room 208
Miami, Florida 33175-2474
T (786) 315-2590 F (786) 315-2599
www.miamidade.gov/building

DEPARTMENT OF REGULATORY AND ECONOMIC RESOURCES (RER)
BOARD AND CODE ADMINISTRATION DIVISION

NOTICE OF ACCEPTANCE (NOA)

E.S. Windows, LLC
3550 NW 49th Street
Miami, FL 33142

SCOPE:

This NOA is being issued under the applicable rules and regulations governing the use of construction materials. The documentation submitted has been reviewed and accepted by Miami-Dade County RER-Product Control Section to be used in Miami-Dade County and other areas where allowed by the Authority Having Jurisdiction (AHJ).

This NOA shall not be valid after the expiration date stated below. The Miami-Dade County Product Control Section (In Miami-Dade County) and/ or the AHJ (in areas other than Miami-Dade County) reserve the right to have this product or material tested for quality assurance purposes. If this product or material fails to perform in the accepted manner, the manufacturer will incur the expense of such testing and the AHJ may immediately revoke, modify, or suspend the use of such product or material within their jurisdiction. RER reserves the right to revoke this acceptance, if it is determined by Miami-Dade County Product Control Section that this product or material fails to meet the requirements of the applicable building code.

This product is approved as described herein, and has been designed to comply with the Florida Building Code, including the High Velocity Hurricane Zone.

DESCRIPTION: Series "2100" Aluminum Horizontal Sliding Window – S.M.I.

APPROVAL DOCUMENT: Drawing No. **W04-101**, titled "Series-2100 Alum. Horiz. Sliding Wdw. (S.M.I.)", sheets 1 through 8 of 8, dated 11/26/04, with revision **G** dated 10/09/17, prepared by Al-Farooq Corporation, signed and sealed by Javad Ahmad, P.E., bearing the Miami-Dade County Product Control Renewal stamp with the Notice of Acceptance number and expiration date by the Miami-Dade County Product Control Section.

MISSILE IMPACT RATING: Small Missile Impact Resistant

LABELING: Each unit shall bear a permanent label with the manufacturer's name or logo, **Barranquilla, Colombia**, model/series, and following statement: "Miami-Dade County Product Control Approved", unless otherwise noted herein.

RENEWAL of this NOA shall be considered after a renewal application has been filed and there has been no change in the applicable building code negatively affecting the performance of this product.

TERMINATION of this NOA will occur after the expiration date or if there has been a revision or change in the materials, use, and/ or manufacture of the product or process. Misuse of this NOA as an endorsement of any product, for sales, advertising or any other purposes shall automatically terminate this NOA. Failure to comply with any section of this NOA shall be cause for termination and removal of NOA.

ADVERTISEMENT: The NOA number preceded by the words Miami-Dade County, Florida, and followed by the expiration date may be displayed in advertising literature. If any portion of the NOA is displayed, then it shall be done in its entirety.

INSPECTION: A copy of this entire NOA shall be provided to the user by the manufacturer or its distributors and shall be available for inspection at the job site at the request of the Building Official.

This NOA **renews NOA No. 17-1114.04** and consists of this page 1 and evidence pages E-1, E-2 and E-3, as well as approval document mentioned above.

The submitted documentation was reviewed by **Manuel Perez, P.E.**

MIAMI-DADE COUNTY APPROVED

10/28/19

NOA No. 19-1015.11
Expiration Date: February 10, 2025
Approval Date: November 07, 2019

E.S. Windows, LLC

NOTICE OF ACCEPTANCE: EVIDENCE SUBMITTED

1. EVIDENCE SUBMITTED UNDER PREVIOUS NOA's

A. DRAWINGS

1. Manufacturer's die drawings and sections.
   (Submitted under NOA No. 04-1208.02)
2. Drawing No. **W04-101**, titled "Series-2100 Alum. Horiz. Sliding Wdw. (S.M.I)", sheets 1 through 8 of 8, dated 11/26/04, with revision **G** dated 10/09/17, prepared by Al-Farooq Corporation, signed and sealed by Javad Ahmad, P.E.
   (Submitted under NOA No. 17-1114.04)

B. TESTS

1. Test reports on: 1) Air Infiltration Test, per FBC, TAS 202-94
   2) Uniform Static Air Pressure Test, Loading per FBC TAS 202-94
   3) Water Resistance Test, per FBC, TAS 202-94
   4) Large Missile Impact Test per FBC, TAS 201-94
   5) Cyclic Wind Pressure Loading per FBC, TAS 203-94
   6) Forced Entry Test, per FBC 2411.3.2.1, and TAS 202-94

   along with marked-up drawings and installation diagram of a horizontal sliding window, prepared by Fenestration Testing Laboratory, Inc., Test Reports No. **FTL-5686**, dated 12/30/08, signed and sealed by Carlos S. Rionda, P.E. and **FTL-5811**, dated 02/16/09, signed and sealed by Michael R. Wenzel, P.E.
   (Submitted under NOA No. 09-1008.04)
2. Test reports on: 1) Air Infiltration Test, per FBC, TAS 202-94
   2) Uniform Static Air Pressure Test, Loading per FBC TAS 202-94
   3) Water Resistance Test, per FBC, TAS 202-94
   4) Forced Entry Test, per FBC 2411.3.2.1, and TAS 202-94

   along with marked-up drawings and installation diagram of a horizontal sliding window, prepared by Hurricane Engineering & Testing, Inc., Test Reports No. **HETI-04-1412**, **HETI-05-1937** and **HETI-05-1423**, dated 10/13/04, 01/26/05 and 01/12/05 respectively, all signed and sealed by Ivonne Ghia, P.E.
   (Submitted under NOA's No. 04-1208.02 and 05-0303.02)

C. CALCULATIONS

1. Anchor verification calculations and structural analysis, complying with **FBC 6th Edition (2017)**, dated 09/22/17, prepared by Al-Farooq Corporation, signed and sealed by Javad Ahmad, P.E.
   (Submitted under NOA No. 17-1114.04)
2. Glazing complies with **ASTM E1300-09**

Manuel Perez, P.E.
Product Control Examiner
NOA No. 19-1015.11
Expiration Date: February 10, 2025
Approval Date: November 07, 2019

NOTICE OF ACCEPTANCE: EVIDENCE SUBMITTED

D. QUALITY ASSURANCE

1. Miami-Dade Department of Regulatory and Economic Resources (RER).

E. MATERIAL CERTIFICATIONS

1. Notice of Acceptance No. **17-0808.02** issued to **Kuraray America, Inc.** for their **"SentryGlas® (Clear and White) Glass Interlayers"** dated 12/28/17, expiring on 07/04/23.
2. Notice of Acceptance No. **16-1117.01** issued to **Kuraray America, Inc.** for their "**Trosifol® Ultraclear, Clear and Color PVB Glass Interlayers**" dated 01/19/17, expiring on 07/08/19.

F. STATEMENTS

1. Statement letter of conformance, complying with **FBC 5th Edition (2014),** with **FBC 6th Edition (2017),** and of no financial interest, dated September 22, 2017, issued by Al-Farooq Corporation, signed and sealed by Javad Ahmad, P.E.
   (Submitted under NOA No. 17-1114.04)
2. Distributor Agreement, dated 10/20/10, signed by Carla Garcia Torrente and by Andres Chamorro.
   (Submitted under NOA No. 12-0308.38)
3. Laboratory compliance letter for Test Reports No. **FTL-5686** and **FTL-5811**, issued by Fenestration Testing Laboratory, Inc., dated 12/30/08 and 02/16/09, signed and sealed by Carlos S. Rionda, P.E. and sealed by Michael R. Wenzel, P.E. respectively.
   (Submitted under NOA No. 09-1008.04)
4. Laboratory compliance letter for Test Reports No. **HETI-04-1412**, **HETI-05-1937** and **HETI-05-1423**, issued by Hurricane Engineering and Testing, Inc., dated 10/13/04, 01/26/05 and 01/12/05, all signed and sealed by Ivonne Ghia, P.E.
   (Submitted under NOA's No. 04-1208.02 and 05-0303.02)

G. OTHERS

1. Notice of Acceptance No. **14-0923.07**, issued to ES Windows, LLC, for their Series "2100" Aluminum Horizontal Sliding Window – S.M.I., approved on 02/12/15 and expiring on 02/10/20.

Manuel Perez, P.E.
Product Control Examiner
NOA No. 19-1015.11
Expiration Date: February 10, 2025
Approval Date: November 07, 2019

NOTICE OF ACCEPTANCE: EVIDENCE SUBMITTED

2. NEW EVIDENCE SUBMITTED

A. DRAWINGS

1. None.

B. TESTS

1. None

C. CALCULATIONS

1. None.

D. QUALITY ASSURANCE

1. Miami-Dade Department of Regulatory and Economic Resources (RER)

E. MATERIAL CERTIFICATIONS

1. Notice of Acceptance No. **17-0808.02** issued to **Kuraray America, Inc.** for their "**SentryGlas® (Clear and White) Glass Interlayers**" dated 12/28/17, expiring on 07/04/23.

2. Notice of Acceptance No. **19-0305.02** issued to **Kuraray America, Inc.** for their "**Trosifol® Ultraclear, Clear and Color PVB Glass Interlayers**" dated 05/09/19, expiring on 07/08/24.

F. STATEMENTS

1. Statement letter of conformance, complying with **FBC 5th Edition (2014),** with **FBC 6th Edition (2017),** and of no financial interest, dated September 22, 2017, issued by Al-Farooq Corporation, signed and sealed by Javad Ahmad, P.E.
(Submitted under NOA No. 17-1114.04)

G. OTHERS

1. Notice of Acceptance No. **17-1114.04**, issued to ES Windows, LLC, for their Series "2100" Aluminum Horizontal Sliding Window – S.M.I., approved on 02/12/18 and expiring on 02/10/20.

Manuel Perez

Manuel Perez, P.E.
Product Control Examiner
NOA No. 19-1015.11
Expiration Date: February 10, 2025
Approval Date: November 07, 2019

THESE WINDOWS ARE RATED FOR SMALL MISSILE IMPACT.
MIAMI–DADE COUNTY APPROVED IMPACT RESISTANT SHUTTERS REQUIRED FOR INSTALLATIONS UP TO 30 FT. OF GRADE.
SHUTTERS NOT REQD. FOR INSTALLATIONS ABOVE 30 FT. OF GRADE.

SERIES–2100 ALUM HORIZ. SLIDING WINDOW

DESIGN LOAD RATINGS FOR THESE WINDOWS TO BE AS PER CHARTS SHOWN ON SHEET 2.

APPROVAL APPLIES TO SINGLE UNITS OR SIDE BY SIDE COMBINATIONS OF H.R./H.R. OR H.R. WITH OTHER WINDOW TYPES IN MODULES OF TWO OR MORE WINDOWS USING MIAMI–DADE COUNTY APPROVED MULLIONS IN BETWEEN.
LOWER DESIGN PRESSURE FROM WINDOWS OR MULLION APPROVAL WILL APPLY TO ENTIRE SYSTEM.

THIS PRODUCT HAS BEEN DESIGNED AND TESTED TO COMPLY WITH THE REQUIREMENTS OF THE 2014 (5TH EDITION)/2017 (6TH EDITION) FLORIDA BUILDING CODE INCLUDING HIGH VELOCITY HURRICANE ZONE (HVHZ).

1BY OR 2BY WOOD BUCKS & BUCK FASTENERS BY OTHERS, MUST BE DESIGNED AND INSTALLED ADEQUATELY TO TRANSFER APPLIED PRODUCT LOADS TO THE BUILDING STRUCTURE.

ANCHORS SHALL BE CORROSION RESISTANT, SPACED AS SHOWN ON DETAILS AND INSTALLED PER MANUF'S INSTRUCTIONS. SPECIFIED EMBEDMENT TO BASE MATERIAL SHALL BE BEYOND WALL DRESSING OR STUCCO.

A LOAD DURATION INCREASE IS USED IN DESIGN OF ANCHORS INTO WOOD ONLY.

ALL SHIMS TO BE HIGH IMPACT, NON–METALLIC AND NON–COMPRESSIBLE.

MATERIALS INCLUDING BUT NOT LIMITED TO STEEL/METAL SCREWS, THAT COME INTO CONTACT WITH OTHER DISSIMILAR MATERIALS SHALL MEET THE REQUIREMENTS OF THE 2014/2017 FLORIDA BLDG. CODE & ADOPTED STANDARDS.

THIS PRODUCT APPROVAL IS GENERIC AND DOES NOT PROVIDE INFORMATION FOR A SITE SPECIFIC PROJECT, i.e. LIFE SAFETY OF THIS PRODUCT, ADEQUACY OF STRUCTURE RECEIVING THIS PRODUCT AND SEALING AROUND OPENING FOR WATER INFILTRATION RESISTANCE ETC.
CONDITIONS NOT SHOWN IN THIS DRAWING ARE TO BE ANALYZED SEPARATELY, AND TO BE REVIEWED BY BUILDING OFFICIAL.

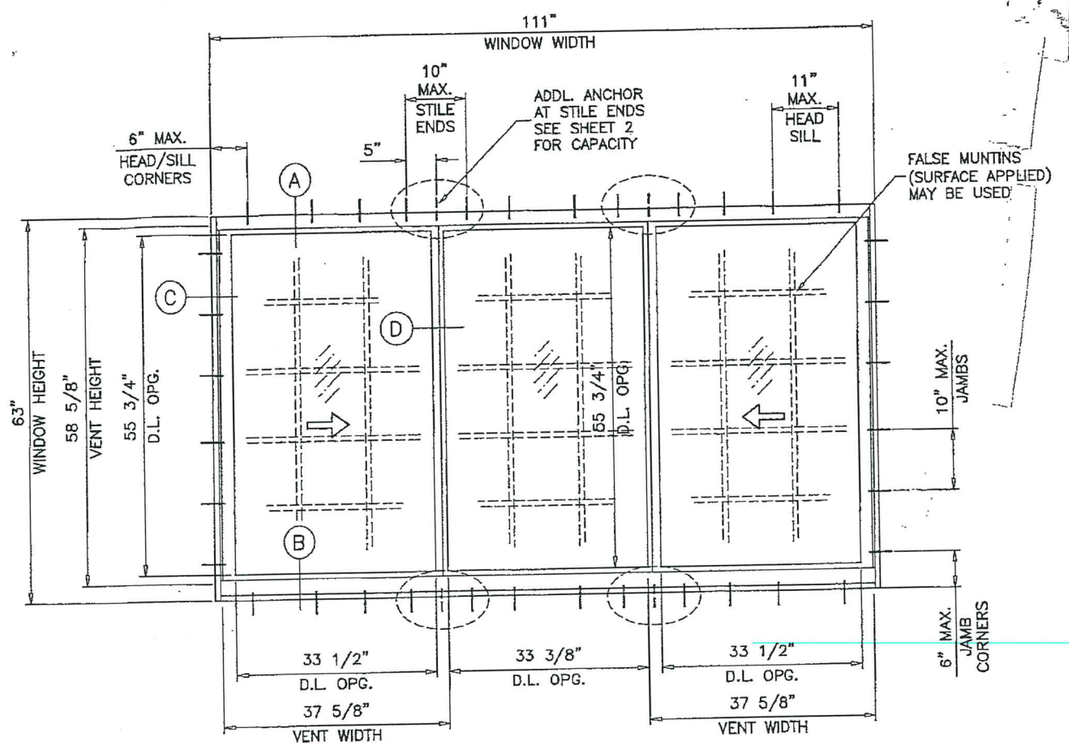

TYPICAL ELEVATION

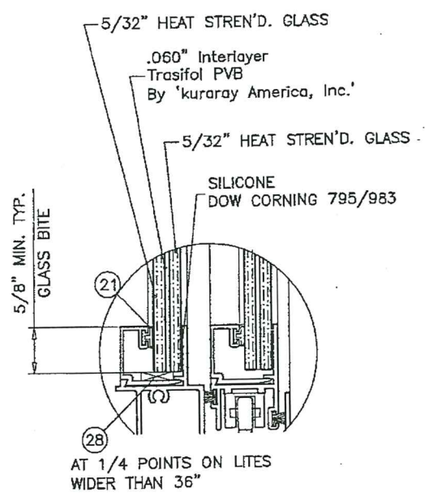

GLASS TYPE 'A'

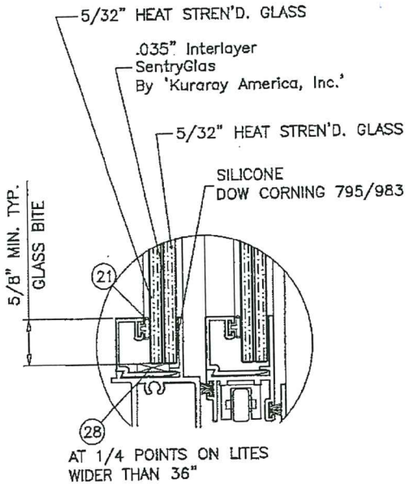

GLASS TYPE 'B'

GLAZING OPTIONS

PRODUCT RENEWED
as complying with the Florida Building Code
Acceptance No. 19-1015.11
Expiration Date Feb. 10, 2025
By
Miami Dade Product Control

PRODUCT REVISED
as complying with the Florida Building Code
NOA–No. 17–1114.04
Expiration Date 02/10/2020
By
Miami–Dade Product Control

LAMINATED GLASS
SMALL MISSILE IMPACT

OCT 11 2017

JAVAD AHMAD
LICENSE
No. 70592
STATE OF FLORIDA
PROFESSIONAL ENGINEER

AL-FAROOQ CORPORATION
ENGINEERS & PRODUCT DEVELOPMENT
9360 SUNSET DRIVE, SUITE 220 (C.A.N. 3538)
MIAMI, FLORIDA 33173
TEL. (305) 264-8100 FAX. (305) 262-6978

COMP–ANL\W04–101ES

SERIES–2100 ALUM HORIZ. SLIDING WDW. (S.M.I.)

E.S. WINDOWS, LLC
3550 N.W. 49 STREET
MIAMI, FL. 33142
TEL. (305) 638–5151 FAX. (305) 638–5158

revisions:			
no	date	by	description
C	03.27.06		GENERAL NOTES REVISED
D	09.11.09		GENERAL REVISION
E	03.05.12		UPDATED TO 2010 FBC
F	09.16.14		UPDATED TO 2014 FBC
G	10.09.17		UPDATED TO 2017 FBC

date: 11–26–04
scale: 1/2"=1'–0"
dr. by: TARIQ
chk. by:

drawing no.
W04–101

sheet 1 of 8

DESIGN LOAD CAPACITY – PSF (XO OR OX SIZES)

WINDOW DIMS.		A	STD. ANCHOR SPACING				ADDL. ANCHOR			
			GLASS TYPE 'A'		GLASS TYPE 'B'		GLASS TYPE 'A'		GLASS TYPE 'B'	
WIDTH	HEIGHT		EXT.(+)	INT.(–)	EXT.(+)	INT.(–)	EXT.(+)	INT.(–)	EXT.(+)	INT.(–)
26–1/2"	26" (2)	3	82.0	108.0	82.0	82.0	–	–	–	–
37"		4	82.0	108.0	82.0	82.0	–	–	–	–
53–1/8"		6	82.0	108.0	82.0	82.0	–	–	–	–
74"		8	82.0	108.0	82.0	82.0	–	–	–	–
26–1/2"	38–3/8" (3)	3	82.0	108.0	82.0	82.0	–	–	–	–
37"		4	82.0	108.0	82.0	82.0	–	–	–	–
53–1/8"		6	82.0	108.0	82.0	82.0	–	–	–	–
74"		8	82.0	108.0	82.0	82.0	–	–	–	–
26–1/2"	50–5/8" (4)	3	82.0	108.0	82.0	82.0	–	–	–	–
37"		4	82.0	108.0	82.0	82.0	–	–	–	–
53–1/8"		6	82.0	108.0	82.0	82.0	–	–	–	–
74"		8	82.0	108.0	82.0	82.0	–	–	–	–
26–1/2"	63" (4)	3	82.0	108.0	82.0	82.0	–	–	–	–
37"		4	82.0	108.0	82.0	82.0	–	–	–	–
53–1/8"		6	82.0	92.5	82.0	82.0	82.0	108.0	–	–
74"		8	75.3	75.3	75.3	75.3	82.0	82.0	82.0	82.0
24"	24" (2)	3	82.0	108.0	82.0	82.0	–	–	–	–
36"		4	82.0	108.0	82.0	82.0	–	–	–	–
48"		6	82.0	108.0	82.0	82.0	–	–	–	–
60"		6	82.0	108.0	82.0	82.0	–	–	–	–
66"		6	82.0	108.0	82.0	82.0	–	–	–	–
72"		8	82.0	108.0	82.0	82.0	–	–	–	–
24"	36" (3)	3	82.0	108.0	82.0	82.0	–	–	–	–
36"		4	82.0	108.0	82.0	82.0	–	–	–	–
48"		6	82.0	108.0	82.0	82.0	–	–	–	–
60"		6	82.0	108.0	82.0	82.0	–	–	–	–
66"		6	82.0	108.0	82.0	82.0	–	–	–	–
72"		8	82.0	108.0	82.0	82.0	–	–	–	–
24"	48" (4)	3	82.0	108.0	82.0	82.0	–	–	–	–
36"		4	82.0	108.0	82.0	82.0	–	–	–	–
48"		6	82.0	108.0	82.0	82.0	–	–	–	–
60"		6	82.0	108.0	82.0	82.0	–	–	–	–
66"		6	82.0	108.0	82.0	82.0	–	–	–	–
72"		8	82.0	108.0	82.0	82.0	–	–	–	–
24"	60" (4)	3	82.0	108.0	82.0	82.0	–	–	–	–
36"		4	82.0	108.0	82.0	82.0	–	–	–	–
48"		6	82.0	106.5	82.0	82.0	82.0	108.0	–	–
60"		6	82.0	91.7	82.0	82.0	82.0	108.0	–	–
66"		6	82.0	86.6	82.0	82.0	82.0	108.0	–	–
72"		8	82.0	82.7	82.0	82.0	82.0	108.0	–	–
24"	66" (5)	3	82.0	108.0	82.0	82.0	–	–	–	–
36"		4	82.0	108.0	82.0	82.0	–	–	–	–
48"		6	82.0	93.3	82.0	82.0	82.0	108.0	–	–
60"		6	79.6	79.6	79.6	79.6	82.0	108.0	82.0	82.0
66"		6	74.8	74.8	74.8	74.8	76.7	108.0	76.7	82.0

A = NO. OF ANCHORS PER HEAD & SILL
( ) = NO. OF ANCHORS PER JAMB

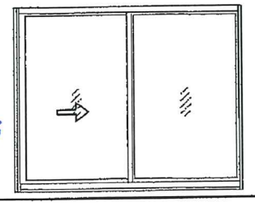

ALL EXTERIOR(+) LOADS SHOWN ON THIS SHEET ARE FOR WINDOWS WITH APPLIED RISER AT FRAME SILL
FOR SILL WITHOUT RISER LIMIT EXT.(+) LOADS TO 73.3 PSF
SEE DETAIL 'B' ON SHEET 3.

PRODUCT RENEWED
as complying with the Florida Building Code
Acceptance No. 19-1015.11
Expiration Date Feb. 10, 2025
By Manuel Perez
Miami-Dade Product Control

DESIGN LOAD CAPACITY – PSF (XOX SIZES)

WINDOW DIMS.		A	STD. ANCHORS		ADDL. ANCHOR	
			GLASS 'A' & 'B'		GLASS 'A' & 'B'	
WIDTH	HEIGHT		EXT.(+)	INT.(–)	EXT.(+)	INT.(–)
74"	26" (2)	9	82.0	82.0	–	–
106–1/4"		12	82.0	82.0	–	–
111"		12	82.0	82.0	–	–
74"	38–3/8" (3)	9	82.0	82.0	–	–
106–1/4"		12	82.0	82.0	–	–
111"		12	82.0	82.0	–	–
74"	50–5/8" (4)	9	82.0	82.0	–	–
106–1/4"		12	82.0	82.0	–	–
111"		12	82.0	82.0	–	–
74"	63" (4)	9	82.0	82.0	–	–
106–1/4"		12	77.1	77.1	82.0	82.0
111"		12	75.3	75.3	82.0	82.0
72"	24" (2)	9	82.0	82.0	–	–
84"		9	82.0	82.0	–	–
96"		9	82.0	82.0	–	–
108"		12	82.0	82.0	–	–
72"	36" (3)	9	82.0	82.0	–	–
84"		9	82.0	82.0	–	–
96"		9	82.0	82.0	–	–
108"		12	82.0	82.0	–	–
72"	48" (4)	9	82.0	82.0	–	–
84"		9	82.0	82.0	–	–
96"		9	82.0	82.0	–	–
108"		12	82.0	82.0	–	–
72"	60" (4)	9	82.0	82.0	–	–
84"		9	82.0	82.0	–	–
96"		9	82.0	82.0	–	–
108"		12	82.0	82.0	–	–
72"	66" (5)	9	82.0	82.0	–	–
84"		9	82.0	82.0	–	–
96"		9	76.3	76.3	78.6	82.0

A = NO. OF ANCHORS PER HEAD & SILL
( ) = NO. OF ANCHORS PER JAMB

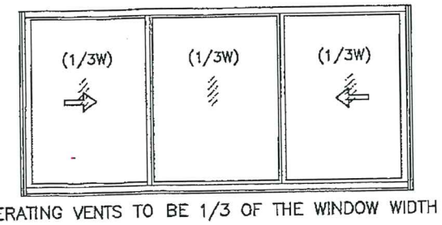

OPERATING VENTS TO BE 1/3 OF THE WINDOW WIDTH

DESIGN LOAD CAPACITY – PSF (XOX SIZES)

WINDOW DIMS.		A	STD. ANCHORS	
			GLASS 'A' & 'B'	
WIDTH	HEIGHT		EXT.(+)	INT.(–)
74"	26" (2)	8	82.0	82.0
106–1/4"		11	82.0	82.0
111"		12	82.0	82.0
74"	38–3/8" (3)	8	82.0	82.0
106–1/4"		11	82.0	82.0
111"		12	82.0	82.0
74"	50–5/8" (4)	8	82.0	82.0
74"	63" (4)	8	82.0	82.0
72"	24" (2)	8	82.0	82.0
84"		8	82.0	82.0
96"		9	82.0	82.0
108"		11	82.0	82.0
72"	36" (3)	8	82.0	82.0
84"		8	82.0	82.0
96"		9	82.0	82.0
108"		11	82.0	82.0
72"	48" (4)	8	82.0	82.0
84"		8	82.0	82.0
96"		9	82.0	82.0
72"	60" (4)	8	82.0	82.0

A = NO. OF ANCHORS PER HEAD & SILL
( ) = NO. OF ANCHORS PER JAMB

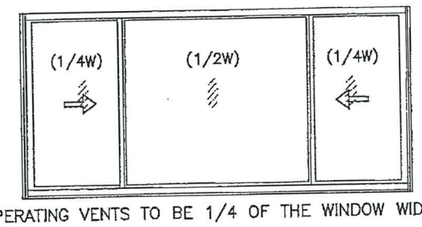

OPERATING VENTS TO BE 1/4 OF THE WINDOW WIDTH

NOTE:
GLASS CAPACITIES ON THIS SHEET ARE BASED ON ASTM E1300–09 (3 SEC. GUSTS) AND FLORIDA BUILDING COMMISSION DECLARATORY STATEMENT DCA05–DEC–219

PRODUCT REVISED
as complying with the Florida Building Code
NOA–No. 17–1114.04
Expiration Date 02/10/2020
By Manuel Perez
Miami–Dade Product Control

JAVAD AHMAD LICENSE No. 70592 STATE OF FLORIDA PROFESSIONAL ENGINEER

AL-FAROOQ CORPORATION
ENGINEERS & PRODUCT DEVELOPMENT
9360 SUNSET DRIVE, SUITE 220
MIAMI, FLORIDA 33173 (C.A.N. 3638)
TEL. (305) 264-8100 FAX. (305) 262-6978

COMP–ANL\W04–101ES

SERIES–2100 ALUM HORIZ. SLIDING WDW. (S.M.L.)

E.S. WINDOWS, LLC
3550 N.W. 49 STREET
MIAMI, FL. 33142
TEL. (305) 638–5151 FAX. (305) 638–5158

revisions:			
no	date	by	description
C	03.27.06		GLASS NOTE ADDED
D	09.11.09		GENERAL REVISION
E	03.05.12		UPDATED TO 2010 FBC
F	09.16.14		UPDATED TO 2014 FBC
G	10.09.17		UPDATED TO 2017 FBC

date: 11–26–04
scale: 1/2"=1'–0"
dr. by: TARIQ
chk. by:

drawing no. W04–101

sheet 2 of 8

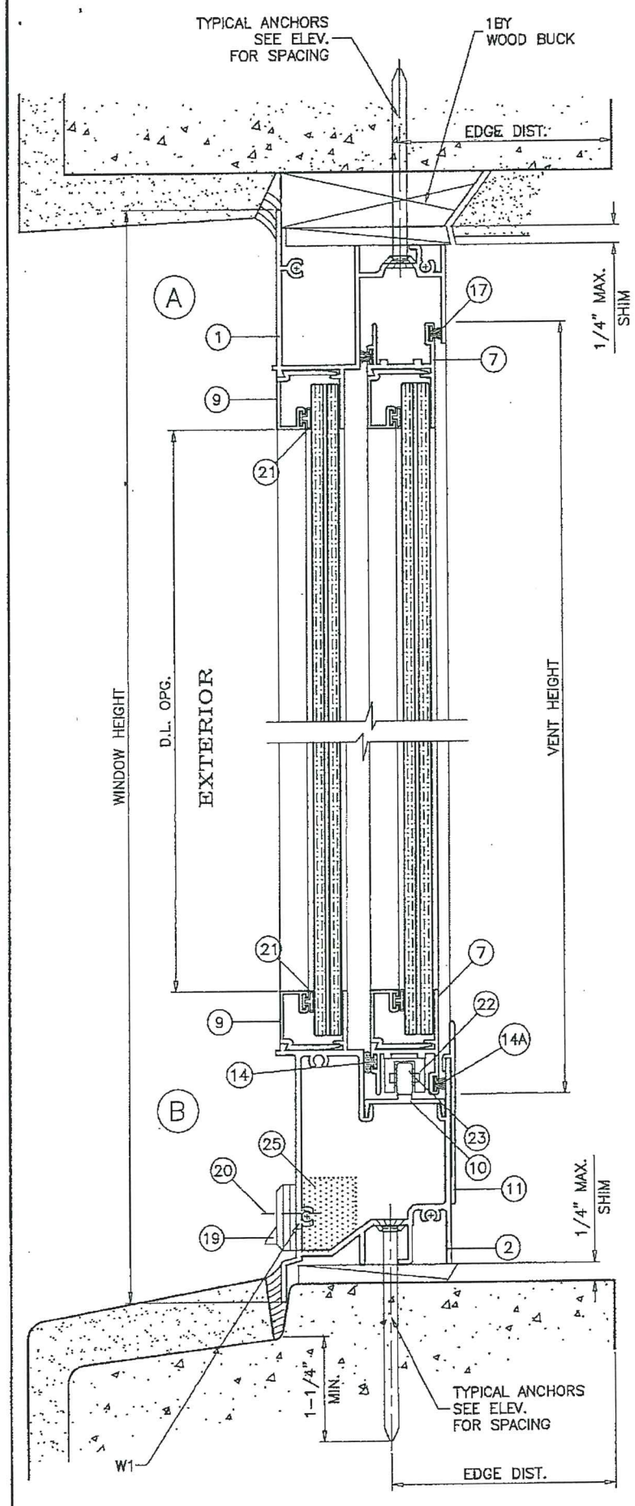

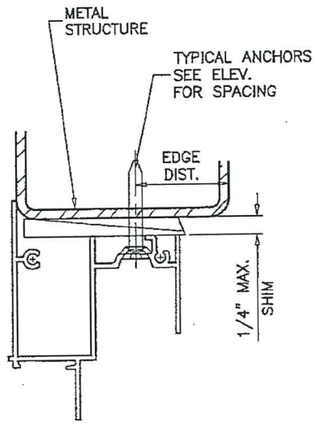

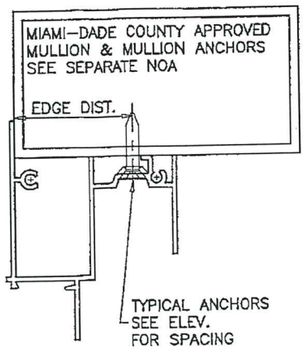

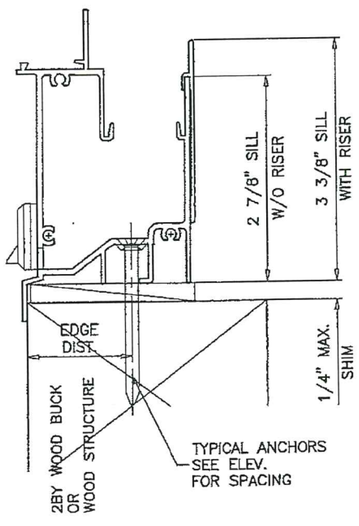

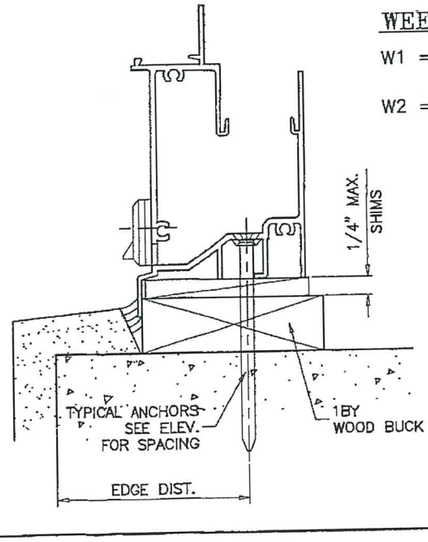

WOOD BUCKS AND METAL STRUCTURE NOT BY E.S. WINDOWS MUST SUSTAIN LOADS IMPOSED BY GLAZING SYSTEM AND TRANSFER THEM TO THE BUILDING STRUCTURE.

TYPICAL ANCHORS: SEE ELEV. FOR SPACING

1/4" DIA. ULTRACON BY 'ELCO' (Fu=177 KSI, Fy=155 KSI)
INTO 2BY WOOD BUCKS OR WOOD STRUCTURES
1-1/2" MIN. PENETRATION INTO WOOD (HEAD/SILL/JAMBS)

THRU 1BY BUCKS INTO CONC. OR BLOCKS
1-1/4" MIN. EMBED INTO CONCRETE (HEAD/SILL/JAMBS)
1-1/4" MIN. EMBED INTO BLOCKS (JAMBS)

DIRECTLY INTO CONCRETE OR BLOCKS
1-1/4" MIN. EMBED INTO CONCRETE (HEAD/SILL/JAMBS)
1-1/4" MIN. EMBED INTO BLOCKS (JAMBS)

#14 SMS OR SELF DRILLING SCREWS (GRADE 2 CRS)
INTO MIAMI-DADE COUNTY APPROVED MULLIONS
OR
INTO METAL STRUCTURES (HEAD/SILL/JAMBS)
(3) THREADS MIN. PENETRATION BEYOND SUBSTRATE
ALUMINUM: 1/8" THK. MIN. (6063-T5 MIN.)
STEEL: 1/8" THK. MIN. (Fy = 36 KSI MIN.)
(STEEL IN CONTACT WITH ALUMINUM TO BE PLATED OR PAINTED)

TYPICAL EDGE DISTANCE

INTO CONCRETE AND MASONRY = 2-1/2" MIN.
INTO WOOD STRUCTURE = 1" MIN.
INTO METAL STRUCTURE = 3/4" MIN.

WOOD AT HEAD, SILL OR JAMBS SG = 0.55 MIN.
CONCRETE AT HEAD, SILL OR JAMBS f'c = 3000 PSI MIN.
C-90 HOLLOW/FILLED BLOCK AT JAMBS f'm = 2000 PSI MIN.

PRODUCT RENEWED
as complying with the Florida Building Code
Acceptance No 19-1015.11
Expiration Date Feb. 10, 2025
By Manuel Perez
Miami-Dade Product Control

SEALANTS:

FRAME AND VENT CORNERS AND INSTALLATION SCREWS AT SILL SEALED WITH WHITE/ALUMINUM COLORED SILICONE.

WEEPHOLES:

W1 = 1-13/16" X 1/4" WEEPHOLES AT 3" FROM EACH END WITH PLASTIC BAFFLE
W2 = 1/4" WEEPHOLE AT TOP & BOTTOM RAIL 1" FROM EACH END

PRODUCT REVISED
as complying with the Florida Building Code
NOA-No. 17-1114.04
Expiration Date 02/10/2020
By Manuel Perez
Miami-Dade Product Control

OCT 11 2017

JAVAD AHMAD LICENSE No. 70592 STATE OF FLORIDA PROFESSIONAL ENGINEER

AL-FAROOQ CORPORATION
ENGINEERS & PRODUCT DEVELOPMENT
9360 SUNSET DRIVE, SUITE 220 (C.A.N. 3538)
MIAMI, FLORIDA 33173 FAX. (305) 262-8978
TEL. (305) 264-8100

COMP-ANL\W04-101ES

SERIES-2100 ALUM HORIZ. SLIDING WDW. (S.M.I.)

E.S. WINDOWS, LLC
3550 N.W. 49 STREET
MIAMI, FL. 33142
TEL. (305) 638-5151 FAX. (305) 638-5158

revisions:			
no	date	by	description
C	03.27.06		FLUSH FRAME DETS. ADDED
D	08.11.08		GENERAL REVISION
E	03.05.12		NO CHANGE THIS SHEET
F	09.16.14		UPDATED TO 2014 FBC
G	10.09.17		UPDATED TO 2017 FBC

date: 11-26-04
scale: 1/2" = 1"
dr. by: TARIQ
chk. by:

drawing no. W04-101
sheet 3 of 8

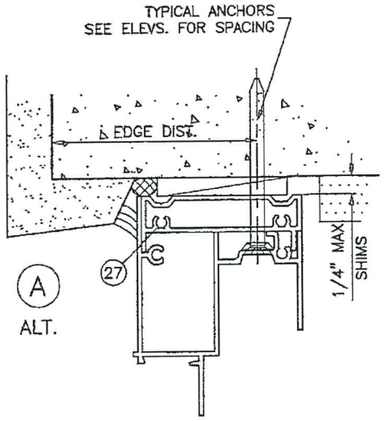

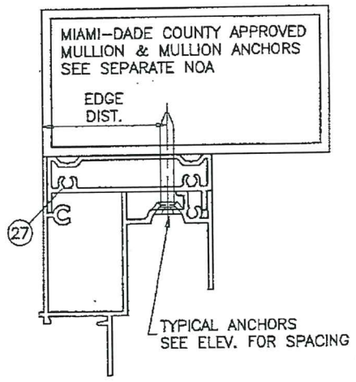

ITEM	PART #	QUANTITY	DESCRIPTION	MATERIAL	MANF./SUPPLIER/REMARKS
1	ES1003	1	FRAME HEAD	6063-T6	-
2	ES2012	1	FRAME SILL	6063-T6	-
3	ES2003	1	FRAME JAMB	6063-T6	-
5	ES1005	1/ VENT	FIXED RAIL (AT SPRING LATCHES)	6063-T6	-
5A	ES1051	1/ VENT	FIXED RAIL (AT SWEEP LATCHES)	6063-T6	-
6	ES2004	1/ VENT	H.D. VENT MEETING RAIL (AT SPRING LATCHES)	6063-T6	-
6A	ES1053	1/ VENT	H.D. VENT MEETING RAIL (AT SWEEP LATCHES)	6063-T6	-
6.1	ES-2004A	1/ VENT	H.D. VENT MEETING RAIL (AT SPRING LATCHES)	6063-T6	ALTERNATE TO 6
6A.1	ES-1053A	1/ VENT	H.D. VENT MEETING RAIL (AT SWEEP LATCHES)	6063-T6	ALTERNATE TO 6A
7	ES1007	2/ VENT	TOP AND BOTTOM RAIL	6063-T5	-
8	ES1006	1/ VENT	JAMB STILE	6063-T5	-
9	ES1103	AS REQD.	GLAZING BEAD	6063-T6	-
10	ES2002	1	SILL TRACK INSERT	6063-T5	-
11	ES2011	AS REQD.	STD. SILL RISER	6063-T5	-
12	ES1009	2/ VENT	SPRING LOADED VENT LATCH	6063-T6	AT 8" FROM ENDS
12A	SL203	2/ VENT	SWEEP LATCH	ZAMAK	AT 11" FROM ENDS, BY INTERLOCK
12B	#8 X 1"	2/ LATCH	LATCH INSTALLATION SCREWS	-	FH SMS
13	ES1012	1/ LATCH	VENT LATCH SPRING	ST. STEEL	-
14	C1B251N	AS REQD.	FOAM FILLED FABRIC W'STRIPPING	-	SCHLEGEL
14A	W23221NG	AS REQD.	FIN SEAL PILE W'STRIPPING	-	ULTRAFAB
15	#8 X 1"	AS REQD.	FRAME/VENT ASSEMBLY SCREWS	CRS	P.H. SMS
16	#10 X 4"	2/ VENT	FIX. RAIL SILL SCREWS	CRS	P.H. SMS
17	W2321NG	AS REQD.	VENT & FIX. RAIL W'STRIPPING	-	ULTRAFAB
18	W23291NG	AS REQD.	FRAME JAMB W'STRIPPING	-	ULTRAFAB
19	WPHL-100	2	BAFFLE	-	M & M PLASTICS
20	#6 X 1/2"	2/ BAFFLE	BAFFLE SCREW	-	F.H. SMS
21	ES1104	AS REQD.	GLAZING GASKET	NEOPRENE	-
22	ES2007	4/ VENT	ROLLER HOUSING & GUIDE	PLASTIC	-
23	ES2006	2/ VENT	ROLLER	BRASS/ST. ST.	-
24	ES2005	2/ VENT	ROLLER PIN	ST. STEEL	-
25	-	1/ WEEP	OPEN CELL FOAM PAD	-	1" X 3/4" X 1" LONG
26	-	1/ VENT	5/16" BOX SCREEN	-	OPTIONAL
27	ES1505	-	FLUSH FRAME ADAPTER	6063-T5	OPTIONAL
28	27-372	2/ LITE	SETTING BLOCK, 7/16" X 3/16" X 3-1/2" LONG	EPDM	DUROMETER 75±5 SHORE A

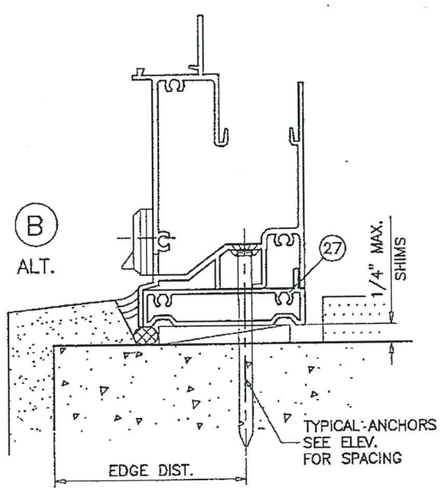

PRODUCT RENEWED
as complying with the Florida
Building Code
Acceptance No. 19-1015.11
Expiration Date Feb. 10, 2025
By Manuel Perez
Miami-Dade Product Control

PRODUCT REVISED
as complying with the Florida Building Code
NOA-No. 17-1114.04
Expiration Date 02/10/2020
By Manuel Perez
Miami-Dade Product Control

OCT 11 2017

JAWAD AHMAD
LICENSE
No. 70592
STATE OF FLORIDA
PROFESSIONAL ENGINEER

afc
AL-FAROOQ CORPORATION
ENGINEERS & PRODUCT DEVELOPMENT
9360 SUNSET DRIVE, SUITE 220 (C.A.N. 3538)
MIAMI, FLORIDA 33173
TEL. (305) 264-8100 FAX. (305) 262-6978

COMP-ANL\W04-101ES

SERIES-2100 ALUM HORIZ. SLIDING WDW. (S.M.I.)

E.S. WINDOWS, LLC
3550 N.W. 49 STREET
MIAMI, FL. 33142
TEL. (305) 638-5151 FAX. (305) 638-5158

revisions:			
no	date	by	description
C	03.27.06		FLUSH FRAME DETS. ADDED
D	09.11.09		GENERAL REVISION
E	03.05.12		NO CHANGE THIS SHEET
F	09.16.14		UPDATED TO 2014 FBC
G	10.09.17		UPDATED TO 2017 FBC

date: 11-26-04
scale: 1/2" = 1"
dr. by: TARIQ
chk. by:

drawing no.
W04-101

sheet 4 of 8

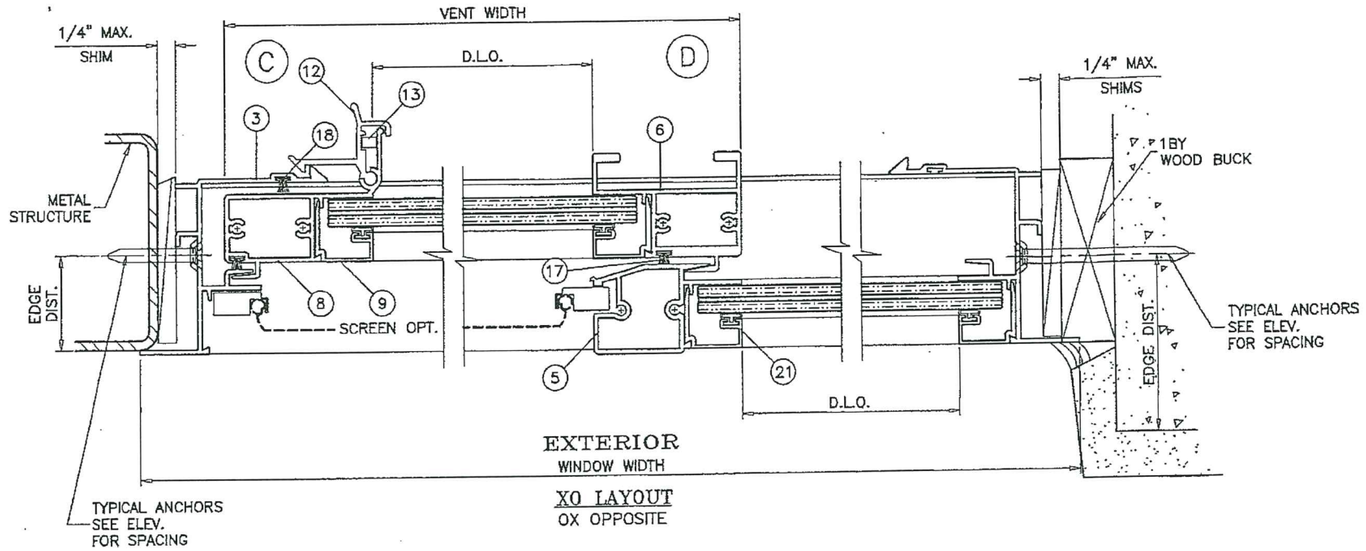

XO LAYOUT
OX OPPOSITE

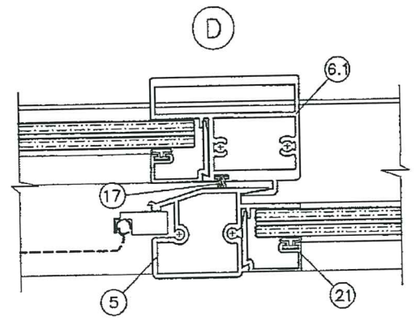

ALTERNATE VENT MTG. RAILS

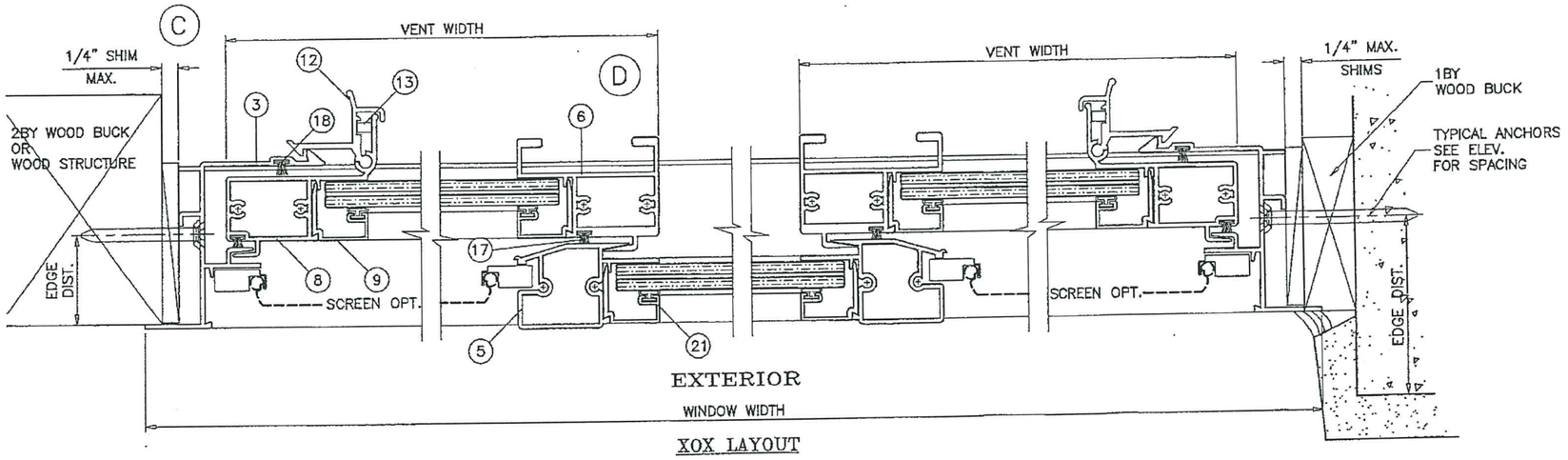

XOX LAYOUT

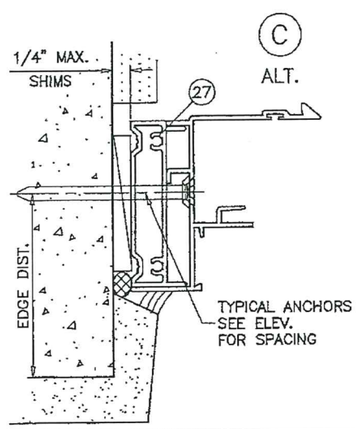

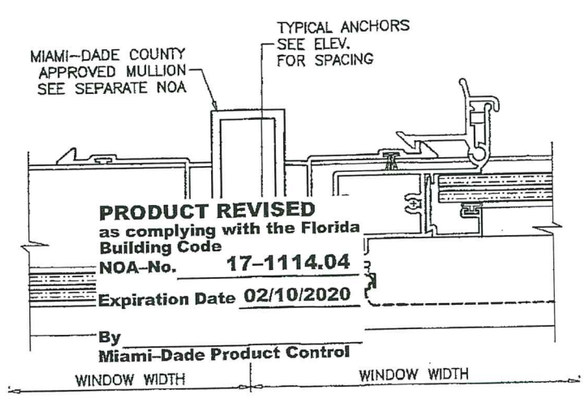

PRODUCT RENEWED
as complying with the Florida Building Code
Acceptance No. 19-1015.11
Expiration Date Feb. 10, 2025
By Manuel Perez
Miami-Dade Product Control

PRODUCT REVISED
as complying with the Florida Building Code
NOA-No. 17-1114.04
Expiration Date 02/10/2020
By Manuel Perez
Miami-Dade Product Control

VENTS WITH
SPRING LOADED LATCHES

OCT 11 2017

JAVAD AHMAD
LICENSE
No. 70592
STATE OF FLORIDA
PROFESSIONAL ENGINEER

AL-FAROOQ CORPORATION
ENGINEERS & PRODUCT DEVELOPMENT
9360 SUNSET DRIVE, SUITE 220
MIAMI, FLORIDA 33173 (C.A.N. 3538)
TEL. (305) 264-8100 FAX. (305) 262-6978

COMP-ANL\W04-101ES

SERIES-2100 ALUM HORIZ. SLIDING WDW. (S.M.I.)

E.S. WINDOWS, LLC
3550 N.W. 49 STREET
MIAMI, FL. 33142
TEL (305) 638-5151 FAX. (305) 638-5158

revisions:			
no	date	by	description
C	03.27.06		FLUSH FRAME DETS. ADDED
D	09.11.09		GENERAL REVISION
E	03.05.12		NO CHANGE THIS SHEET
F	08.16.14		UPDATED TO 2014 FBC
G	10.09.17		UPDATED TO 2017 FBC

date: 11-26-04
scale: 1/2" = 1"
dr. by: TARIQ
chk. by:

drawing no.
W04-101

sheet 5 of 8

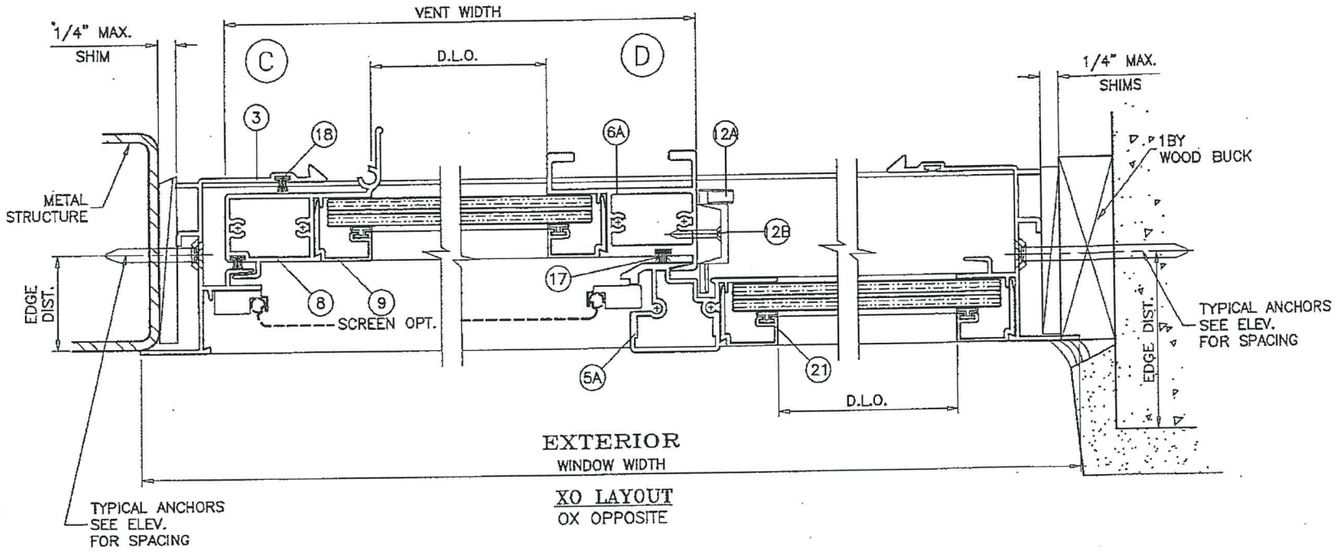

XO LAYOUT
OX OPPOSITE

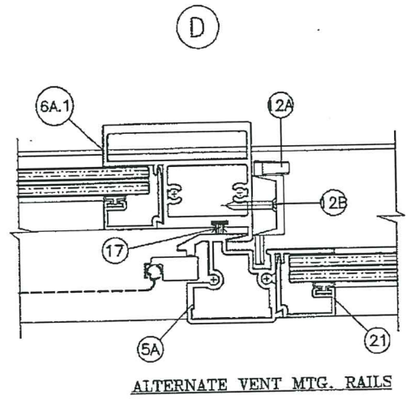

ALTERNATE VENT MTG. RAILS

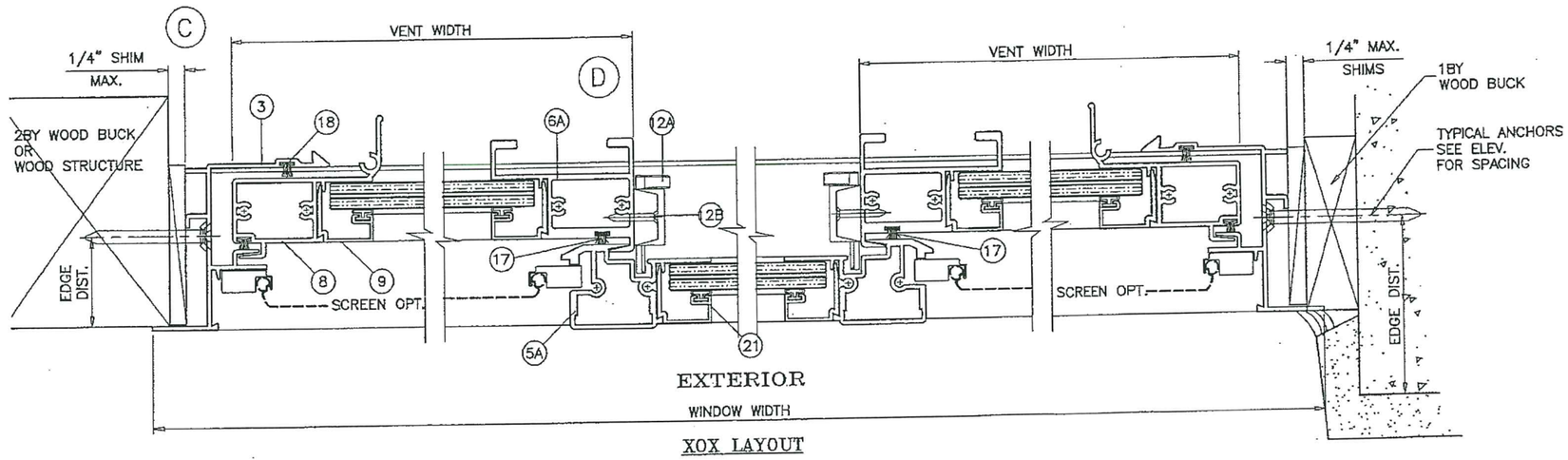

XOX LAYOUT

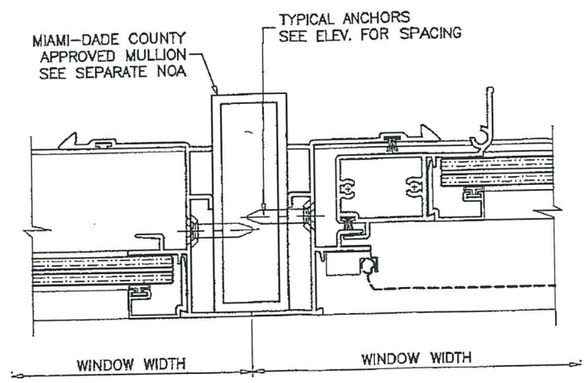

VENTS WITH SWEEP LATCHES

PRODUCT RENEWED
as complying with the Florida Building Code
Acceptance No. 19.1015.11
Expiration Date Feb. 10, 2025
By Manuel Perez
Miami-Dade Product Control

PRODUCT REVISED
as complying with the Florida Building Code
NOA-No. 17-1114.04
Expiration Date 02/10/2020
By Manuel Perez
Miami-Dade Product Control

OCT 11 2017

JAVAD AHMAD
LICENSE
No. 70592
STATE OF FLORIDA
PROFESSIONAL ENGINEER

AL-FAROOQ CORPORATION
ENGINEERS & PRODUCT DEVELOPMENT
9360 SUNSET DRIVE, SUITE 220
MIAMI, FLORIDA 33173 (C.A.N. 3538)
TEL. (305) 264-8100 FAX. (305) 262-6978

COMP-ANL\W04-101ES

SERIES-2100 ALUM HORIZ. SLIDING WDW. (S.M.I.)

E.S. WINDOWS, LLC
3550 N.W. 49 STREET
MIAMI, FL. 33142
TEL. (305) 638-5151 FAX. (305) 638-5158

revisions:			
no	date	by	description
C	03.27.06		FLUSH FRAME DETS. ADDED
D	09.11.06		GENERAL REVISION
E	03.05.12		NO CHANGE THIS SHEET
F	09.16.14		UPDATED TO 2014 FBC
G	10.09.17		UPDATED TO 2017 FBC

date: 11-26-04
scale: 1/2" = 1"
dr. by: TARIQ
chk. by:

drawing no. W04-101

sheet 6 of 8

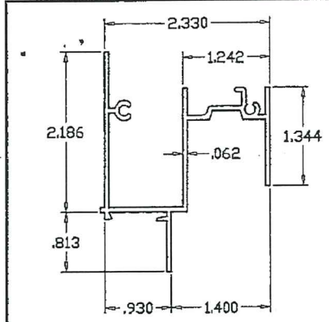

(1) FRAME HEAD

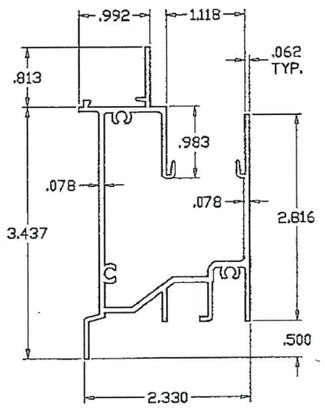

(2) FRAME SILL

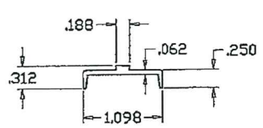

(10) SILL TRACK

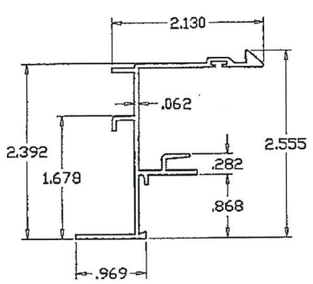

(3) FRAME JAMB

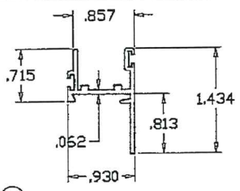

(7) VENT TOP/BOTTOM RAIL

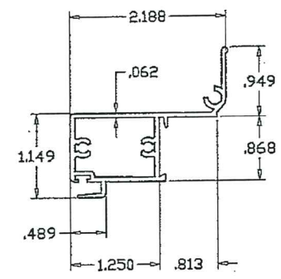

(8) JAMB STILE

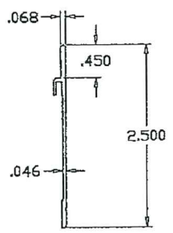

(11) SILL RISER

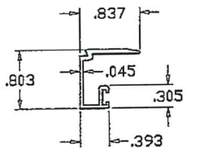

(9) GLAZING BEAD

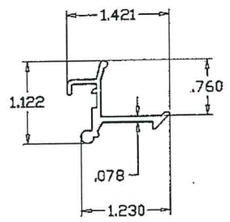

(12) VENT LATCH

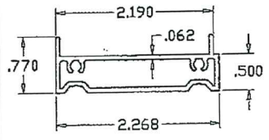

(27) FLUSH FRAME ADAPTER

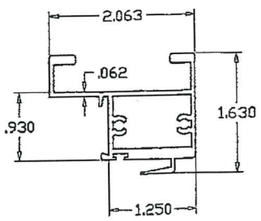

(6) H.D. MEETING RAIL AT SPRING LATCHES

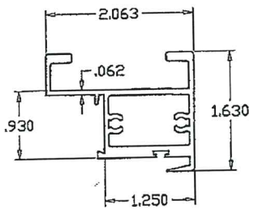

(6A) H.D. MEETING RAIL AT SWEEP LATCHES

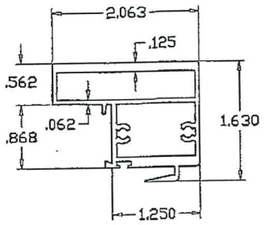

(6.1) H.D. MEETING RAIL AT SPRING LATCHES

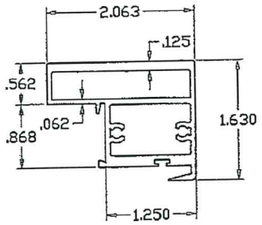

(6A.1) H.D. MEETING RAIL AT SWEEP LATCHES

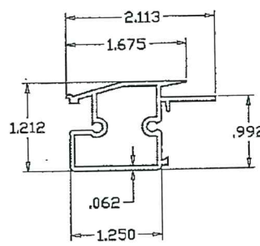

(5) FIXED RAIL AT SPRING LATCHES

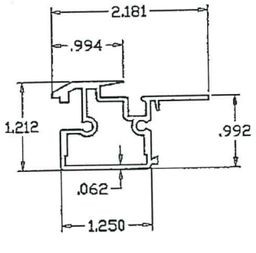

(5A) FIXED RAIL AT SWEEP LATCHES

PRODUCT RENEWED
as complying with the Florida Building Code
Acceptance No. 19-1015.11
Expiration Date Feb. 10, 2025
By Manuel Perez
Miami-Dade Product Control

PRODUCT REVISED
as complying with the Florida Building Code
NOA-No. 17-1114.04
Expiration Date 02/10/2020
By Manuel Perez
Miami-Dade Product Control

OCT 11 2017

JAVAD AHMAD
LICENSE
No. 70592
STATE OF FLORIDA
PROFESSIONAL ENGINEER

af c
AL-FAROOQ CORPORATION
ENGINEERS & PRODUCT DEVELOPMENT
9360 SUNSET DRIVE, SUITE 220
MIAMI, FLORIDA 33173 (C.A.N. 3638)
TEL. (305) 264-8100 FAX. (305) 262-6978

COMP-ANL\W04-101ES

SERIES-2100 ALUM HORIZ. SLIDING WDW. (S.M.I.)

E.S. WINDOWS, LLC
3550 N.W. 49 STREET
MIAMI, FL. 33142
TEL. (305) 638-5158 FAX. (305) 638-5158

revisions:			
no	date	by	description
C	03.27.06		ITEM 27 ADDED
D	09.11.09		GENERAL REVISION
E	03.05.12		NO CHANGE THIS SHEET
F	09.16.14		UPDATED TO 2014 FBC
G	10.09.17		UPDATED TO 2017 FBC

date: 11-26-04
scale: 1/2" = 1"
dr. by: TARIQ
chk. by:

drawing no.
W04-101
sheet 7 of 8

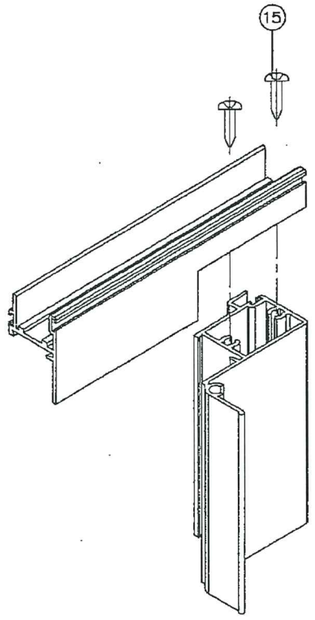

VENT TOP/BOTTOM CORNERS

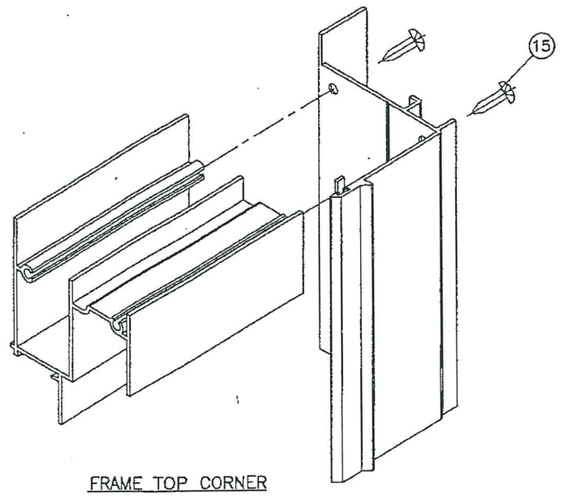

FRAME TOP CORNER

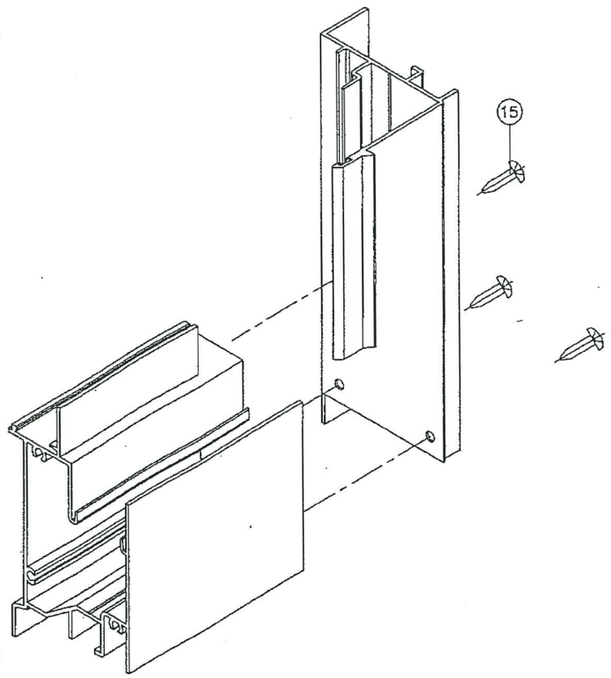

FRAME BOTTOM CORNER

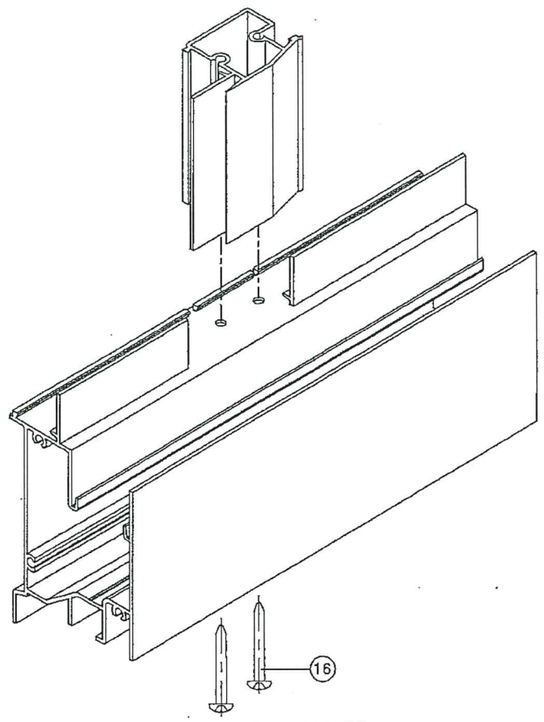

FIXED MTG. RAIL CORNER

PRODUCT RENEWED
as complying with the Florida Building Code
Acceptance No. 19-1015.11
Expiration Date Feb. 10, 2025
By
Miami-Dade Product Control

PRODUCT REVISED
as complying with the Florida Building Code
NOA-No. 17-1114.04
Expiration Date 02/10/2020
By
Miami-Dade Product Control

OCT 11 2017

JAVAD AHMAD
LICENSE
No. 70592
STATE OF FLORIDA
PROFESSIONAL ENGINEER

AL-FAROOQ CORPORATION
ENGINEERS & PRODUCT DEVELOPMENT
9360 SUNSET DRIVE, SUITE 220
MIAMI, FLORIDA 33173 (C.A.N. 3638)
TEL. (305) 264-8100 FAX. (305) 262-6978

COMP-ANL\W04-101ES

SERIES-2100 ALUM HORIZ. SLIDING WDW. (S.M.I.)

E.S. WINDOWS, LLC
3550 N.W. 49 STREET
MIAMI, FL. 33142
TEL. (305) 638-5151 FAX. (305) 638-5158

revisions:			
no	date	by	description
C	03.27.08		ITEM 27 ADDED
D	09.11.09		GENERAL REVISION
E	03.05.12		NO CHANGE THIS SHEET
F	09.16.14		NO CHANGE THIS SHEET
G	10.09.17		UPDATED TO 2017 FBC

date: 11-26-04
scale: 1/2" = 1"
dr. by: TARIQ
chk. by:

drawing no.
W04-101

sheet 8 of 8