MIAMI-DADE COUNTY
DEPARTMENT OF REGULATORY AND ECONOMIC RESOURCES
BOARD AND CODE ADMINISTRATION DIVISION

MIAMI-DADE COUNTY
PRODUCT CONTROL SECTION
11805 SW 26 Street, Room 208
Miami, Florida 33175-2474
T (786) 315-2590 F (786) 315-2599
www.miamidade.gov/economy

NOTICE OF ACCEPTANCE (NOA)

CertainTeed LLC
803 Belden Road
Jackson, MI, 49203

SCOPE:

This NOA is being issued under the applicable rules and regulations governing the use of construction materials. The documentation submitted has been reviewed and accepted by Miami-Dade County RER- Product Control Section to be used in Miami Dade County and other areas where allowed by the Authority Having Jurisdiction (AHJ).

This NOA shall not be valid after the expiration date stated below. The Miami-Dade County Product Control Section (In Miami Dade County) and/or the AHJ (in areas other than Miami Dade County) reserve the right to have this product or material tested for quality assurance purposes. If this product or material fails to perform in the accepted manner, the manufacturer will incur the expense of such testing and the AHJ may immediately revoke, modify, or suspend the use of such product or material within their jurisdiction. RER reserves the right to revoke this acceptance, if it is determined by Miami-Dade County Product Control Section that this product or material fails to meet the requirements of the applicable building code.

This product is approved as described herein and has been designed to comply with the High Velocity Hurricane Zone of the Florida Building Code.

DESCRIPTION: **Polyethylene Plastic Shell Fence**

APPROVAL DOCUMENT: Drawing No. none, titled " Allegheny / EcoStone Six Foot Fence Panel ", sheets 1 through 3 of 3, prepared by Nemo etc., last revision #2 dated March 05, 2020, signed and sealed by Robert Nieminen, P.E., on March 10, 2020, bearing the Miami-Dade County Product Control Revision stamp with the Notice of Acceptance number and the expiration date by the Miami-Dade County Product Control Section.

MISSILE IMPACT RATING: **None**

LABELING: Each fence section shall bear a permanent label with the manufacturer's name or logo, city, state and the following statement: "Miami-Dade County Product Control Approved", unless otherwise noted herein.

RENEWAL of this NOA shall be considered after a renewal application has been filed and there has been no change in the applicable building code negatively affecting the performance of this product.

TERMINATION of this NOA will occur after the expiration date or if there has been a revision or change in the materials, use, and/or manufacture of the product or process. Misuse of this NOA as an endorsement of any product, for sales, advertising or any other purposes shall automatically terminate this NOA. Failure to comply with any section of this NOA shall be cause for termination and removal of NOA.

ADVERTISEMENT: The NOA number preceded by the words Miami-Dade County, Florida, and followed by the expiration date may be displayed in advertising literature. If any portion of the NOA is displayed, then it shall be done in its entirety.

INSPECTION: A copy of this entire NOA shall be provided to the user by the manufacturer or its distributors and shall be available for inspection at the job site at the request of the Building Official.

This NOA **revises NOA #19-1202.04** and consists of this page 1, evidence submitted pages E-1, E-2, & E-3 as well as approval document mentioned above.
The submitted documentation was reviewed by **Helmy A. Makar, P.E., M.S.**

MIAMI-DADE COUNTY APPROVED

Helmy A. Makar
04/23/2020

NOA No. 20-0303.01
Expiration Date: 04/04/2023
Approval Date: 04/23/2020

CertainTeed LLC

NOTICE OF ACCEPTANCE: EVIDENCE SUBMITTED

1. EVIDENCE SUBMITTED UNDER PREVIOUS APPROVAL # 12-0125.02

A. DRAWINGS

1. *Drawing No. 66781, titled " SimTek Fence ", sheets 1 and 2 of 2, prepared by Rick Boyette Consulting, Inc., dated 03/04/13, signed and sealed by Richard Boyette, P.E.*

B. TESTS

1. *Test report on Uniform Static Air Pressure Test, prepared by Architectural Testing, Report # 72820.03-119-18, dated January 28, 2008, signed and sealed by Joseph A. Reed, P.E.*

C. CALCULATIONS

1. *Calculation per FBC 2010, 4 pages, dated 07/12/12, S & S by Richard Boyette, P.E.*

D. QUALITY ASSURANCE

1. *By Miami-Dade County Department of Regulatory and Economic Resources.*

E. MATERIAL CERTIFICATIONS

1. *Manufacturer Specification Drawings.*
2. *Accelerated Weathering and tensile test (ASTM D 638), Self Ignition test (ASTM D 1929), Smoke Density test (ASTM D 2843), and Rate of Burn (ASTM D 635) prepared by Architectural Testing, Report # 72820.03-119-18, dated January 28, 2008, signed and sealed by Joseph A. Reed, P.E.*

2. EVIDENCE SUBMITTED UNDER PREVIOUS APPROVAL # 18-0208.02

A. DRAWINGS

1. *Drawing No. 66781, titled " SimTek Fence ", sheets 1 and 2 of 2, prepared by Rick Boyette Consulting, Inc., dated 01/10/18, signed and sealed by Richard Boyette, P.E.*

B. TESTS

1. *None.*

C. CALCULATIONS

1. *None.*

D. QUALITY ASSURANCE

1. *By Miami-Dade County Department of Regulatory and Economic Resources.*

E. MATERIAL CERTIFICATIONS

1. *None.*

F. STATEMENTS

1. *FBC 2017 Edition compliance letter prepared by Rick Boyette Consulting, Inc., dated 01/15/18, signed and sealed by Richard Boyette, P.E.*

Helmy A. Makar, P.E., M.S.
Product Control Section Supervisor
NOA No. 20-0303.01
Expiration Date: 04/04/2023
Approval Date: 04/23/2020

NOTICE OF ACCEPTANCE: EVIDENCE SUBMITTED

3. EVIDENCE SUBMITTED UNDER PREVIOUS APPROVAL # 19-0820.02

A. DRAWINGS

1. *Drawing No. none, titled " Allegheny / EcoStone Six Foot Fence Panel ", sheets 1 and 2 of 2, prepared by Nemo etc., last revision #1 dated April 15, 2019, signed and sealed by Robert Nieminen, P.E., on May 09, 2019.*

B. TESTS

1. *None.*

C. CALCULATIONS

1. *None.*

D. QUALITY ASSURANCE

1. *By Miami-Dade County Department of Regulatory and Economic Resources.*

E. MATERIAL CERTIFICATIONS

1. *None.*

F. STATEMENTS

1. *FBC 2017 Edition compliance letter prepared by Nemo etc., signed and sealed by Robert Nieminen, P.E., on May 09, 2019.*

4. EVIDENCE SUBMITTED UNDER PREVIOUS APPROVAL # 19-1202.04

A. DRAWINGS

1. *None.*

B. TESTS

1. *None.*

C. CALCULATIONS

1. *None.*

D. QUALITY ASSURANCE

1. *By Miami-Dade County Department of Regulatory and Economic Resources.*

E. MATERIAL CERTIFICATIONS

1. *None.*

F. STATEMENTS

1. *FBC 2017 Edition compliance letter prepared by Nemo etc., signed and sealed by Robert Nieminen, P.E., on May 09, 2019.*
2. *Certificate of a name change.*

Helmy A. Makar, P.E., M.S.
Product Control Section Supervisor
NOA No. 20-0303.01
Expiration Date: 04/04/2023
Approval Date: 04/23/2020

NOTICE OF ACCEPTANCE: EVIDENCE SUBMITTED

5. NEW EVIDENCE SUBMITTED

A. DRAWINGS

1. *Drawing No. none, titled " Allegheny / EcoStone Six Foot Fence Panel ", sheets 1 through 3 of 3, prepared by Nemo etc., last revision #2 dated March 05, 2020, signed and sealed by Robert Nieminen, P.E., on March 10, 2020.*

B. TESTS

1. *Test report on Uniform Static Air Pressure Test, prepared by Intertek, Report # 17273.01-119-18 R0, dated February 19, 2020, signed and sealed by Daniel C. Culbert, P.E.*

C. CALCULATIONS

1. *None.*

D. QUALITY ASSURANCE

1. *By Miami-Dade County Department of Regulatory and Economic Resources.*

E. MATERIAL CERTIFICATIONS

1. *None.*

F. STATEMENTS

1. *FBC 2017 Edition compliance letter prepared by Nemo etc., signed and sealed by Robert Nieminen, P.E., on May 09, 2019.*

Helmy A. Makar, P.E., M.S.
Product Control Section Supervisor
NOA No. 20-0303.01
Expiration Date: 04/04/2023
Approval Date: 04/23/2020

Allegheny / EcoStone Six Foot Fence Panel drawing

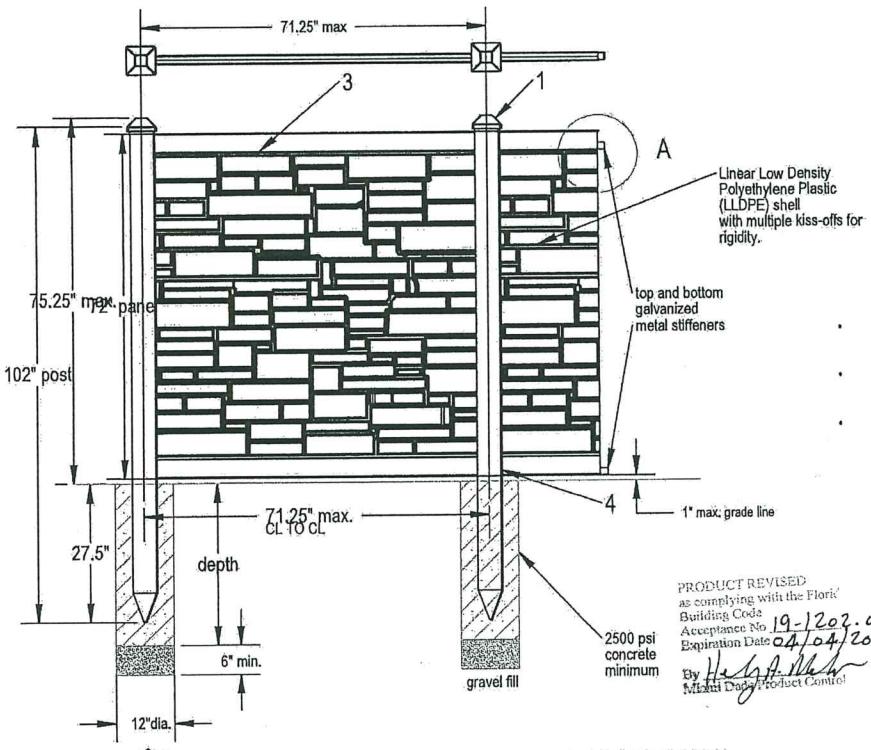

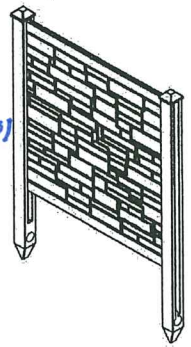

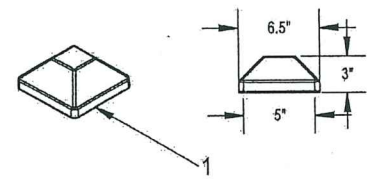

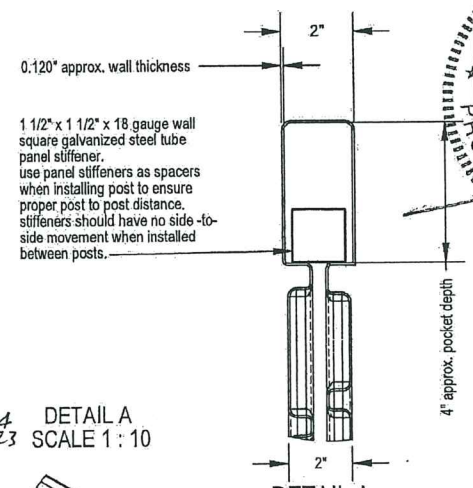

DETAIL A
SCALE 1:4
Fence panel cut away

DETAIL A
SCALE 1 : 10

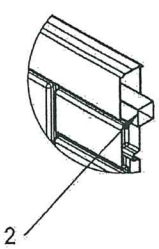

PRODUCT REVISED
as complying with the Florida Building Code
Acceptance No 19-1202.04
Expiration Date 04/04/2023
By [signature]
Miami Dade Product Control

PRODUCT REVISED
as complying with the Florida Building Code
Acceptance No 19-0820.02
Expiration Date 04/04/2023
By [signature]
Miami Dade Product Control

PRODUCT REVISED
as complying with the Florida Building Code
Acceptance No 20-0303.01
Expiration Date 04/04/23
By [signature]
Miami Dade Product Control

DESIGN 2017 FBC 1616.2.1 Based on wind loads per ASCE7-10 and the following criteria:
75 mph Fastest Mile Wind Speed
OR 115 mph (Ultimate 3 sec. gust)

6 foot Bufftech privacy fence

ITEM NO.	PART DESCRIPTION	WEIGHT	LENGTH
1	CAP	.35 LBS.	
2	PANEL STIFFENER	5 LBS.	70 1/4"
3	SIMTEK PANEL	60 LBS.	70"
4	5" X 5" o.d. POST	30 LBS.	102"

Fence Height	Exposure	Min. Footing Req'd Depth	Min. Footing Req'd Diameter
Up to 48"	B	24"	12"
	C	30"	12"
49" to 76"	B	34"	12"
	C	36"	12"

NEMO|etc.
ENGINEER | EVALUATE | TEST | CONSULT | CERTIFY
353 Christian Street, Unit #13
Oxford, CT 06478
TEL: 203 262 9245
FAX: 203 262 9243
WWW.NEMOETC.COM

Drawn by:
Rick Roberts
P.E. Review

ROBERT NIEMINEN
LICENSE
No 59166
05/09/2019
STATE OF FLORIDA
PROFESSIONAL ENGINEER

Company Name:

CertainTeed
SAINT-GOBAIN
803 Belden Road
Jackson, Michigan 49203

Neil J. Sexton, AIA
Compliance & Technical Services Manager
Phone: 517-780-3185

Rev #	Description	Date
1	18-0208.02	04/15/19

Title:
CertainTeed Bufftech Fence
NOA No. 18-0208.02

Drawing: FENCING
Date: 04/15/2019
Scale: NTS
Sheet: 1 of 3

Bufftech Fence post drawing

All Bufftech posts are made with linear low density polyethylene (LLDPE) shell

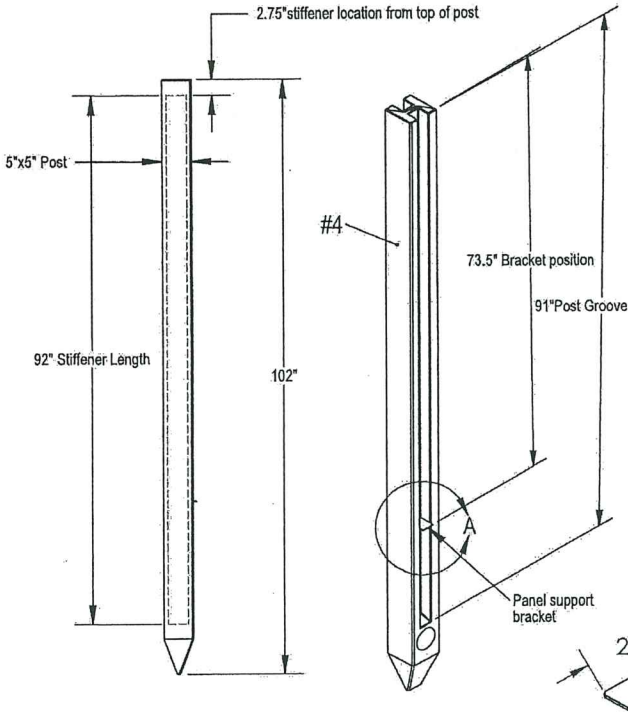

PRODUCT REVISED
as complying with the Florida Building Code
Acceptance No 20-0303.01
Expiration Date 04/04/23
By
Miami Dade Product Control

PRODUCT REVISED
as complying with the Florida Building Code
Acceptance No 19-0820.02
Expiration Date 04/04/2023
By
Miami Dade Product Control

PRODUCT REVISED
as complying with the Florida Building Code
Acceptance No 19-1202.04
Expiration Date 04/04/2023
By
Miami Dade Product Control

Corner Post #2

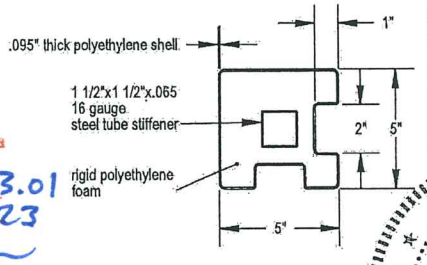

End Post #3

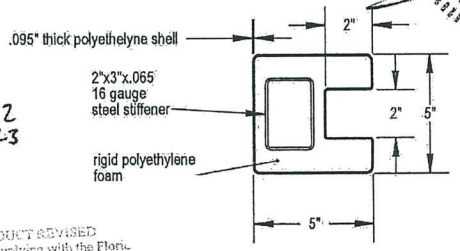

Line Post #4

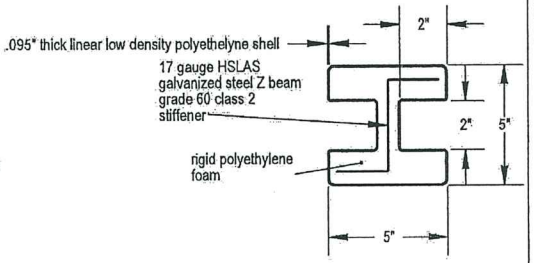

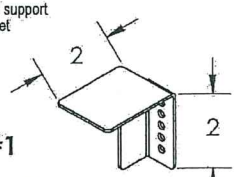

#1

Design 2017 FBC 1616.2.1 Based on wind loads per ASCE 7-10 and the following criteria:
75 mph Fastest Mile Wind Speed
OR 115 mph (Ultimate 3 sec. gust)

- polyethylene copolymer shell.
- triangulated shape for improved load distribution.
- panel support brackets must be used under both sides of every panel.
- zinc plated 1 1/2" #10 hex screws to insure proper engagement with post.
- the post and brackets are to be installed such that each panel is level.

6 FOOT BUFFTECH PRIVACY FENCE

ITEM NO.	PART DESCRIPTION	WEIGHT	LENGTH
1	PANEL SUPPORT BRACKET		
2	CORNER POST	30 LBS.	102"
3	END POST	30 LBS.	102"
4	LINE POST	30 LBS.	102"

NEMO|etc.
ENGINEER | EVALUATE | TEST | CONSULT | CERTIFY
353 Christian Street, Unit #13
Oxford, CT 06478
TEL: 203 262 9245
FAX: 203 262 9243
WWW.NEMOETC.COM

Drawn by: Nick Boyette
PE Review:

ROBERT NIEMINEN LICENSE No 59166 05/09/2019 STATE OF FLORIDA PROFESSIONAL ENGINEER
Company Name

CertainTeed SAINT-GOBAIN
803 Belden Road
Jackson, Michigan 49203

Neil J. Sexton, AIA
Compliance & Technical Services Manager
Phone: 517-780-3185

Rev #	Description	Date
1	18-0208.02	04/15/19

Title:
CertainTeed Bufftech Fence
NOA No. 18-0208.02

Drawing: FENCING
Date: 04/15/2019
Scale: NTS
Sheet: 2 of 3

Sherwood / Ashland Six Foot Fence Panel drawing

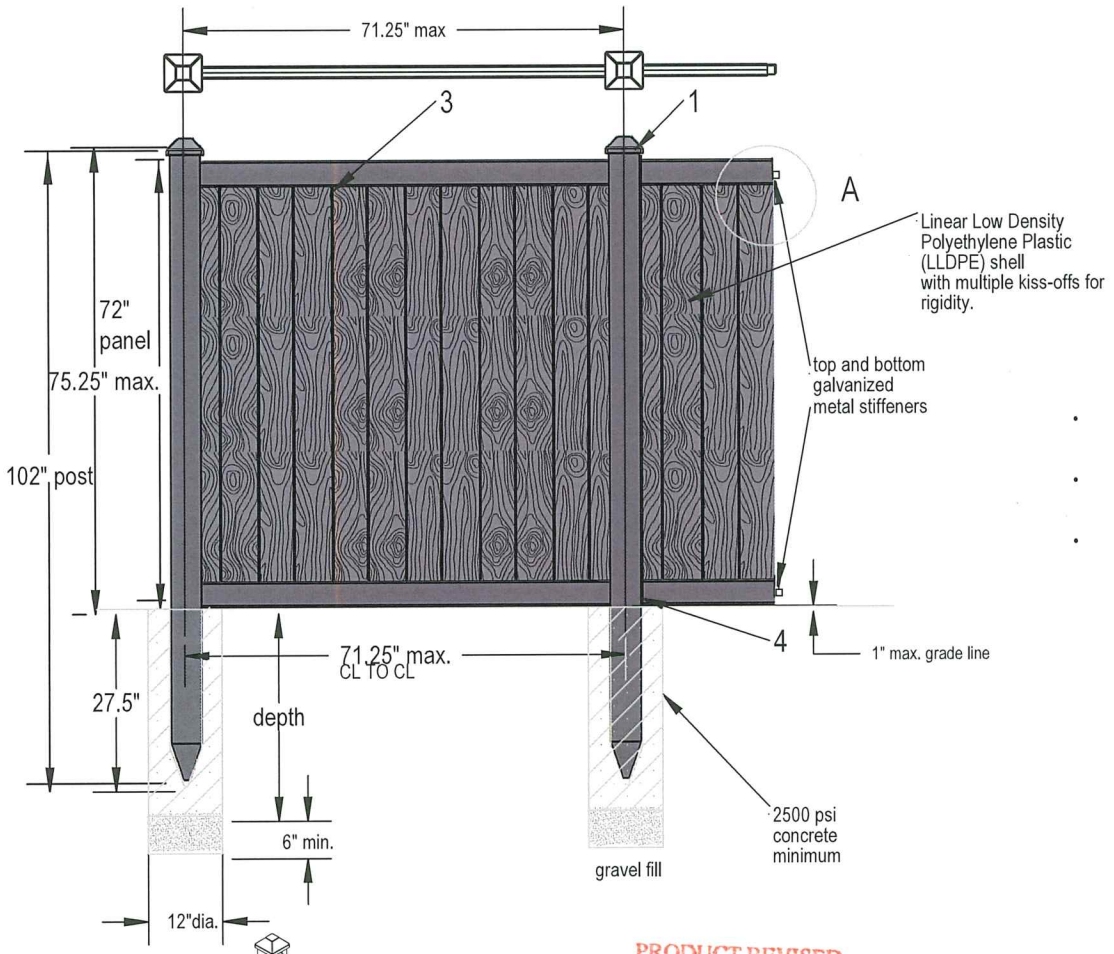

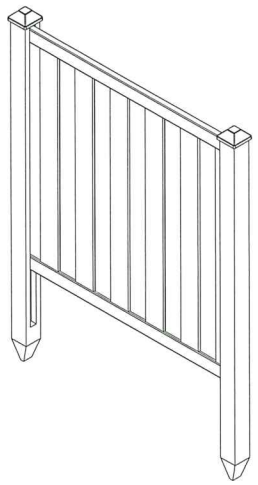

PRODUCT REVISED
as complying with the Florida
Building Code
Acceptance No 20-0303.01
Expiration Date 04/04/23
By
Miami Dade Product Control

DESIGN 2017 FBC 1616.2.1 Based on wind loads per ASCE7-10 and the following criteria:
75 mph Fastest Mile Wind Speed
OR 115 mph (Ultimate 3 sec. gust)

6 foot Bufftech privacy fence

ITEM NO.	PART DESCRIPTION	WEIGHT	LENGTH
1	CAP	.35 LBS.	
2	PANEL STIFFENER	5 LBS.	70 1/4"
3	SIMTEK PANEL	60 LBS.	70"
4	5" X 5" o.d. POST	30 LBS.	102"

Post Cap

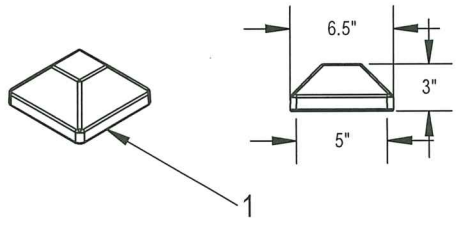

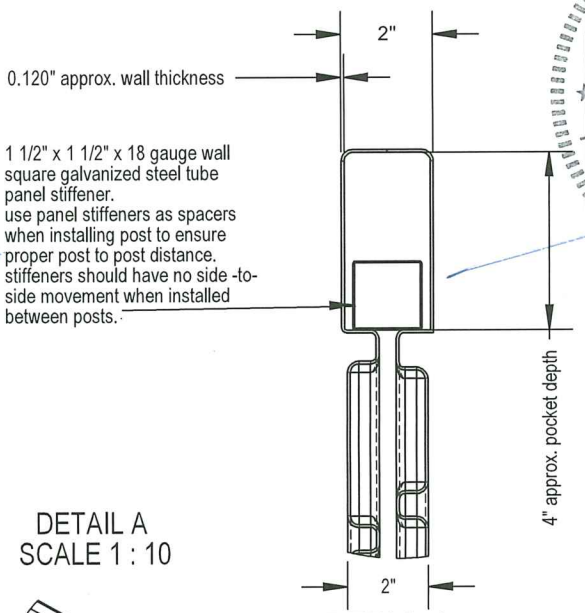

DETAIL A
SCALE 1 : 10

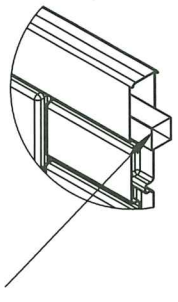

DETAIL A
SCALE 1:4
Fence panel cut away

Fence Height	Exposure	Min. Footing Req'd Depth	Min. Footing Req'd Diameter
Up to 48"	B	24"	12"
	C	30"	12"
49" to 76"	B	34"	12"
	C	36"	12"

NEMO|etc.
ENGINEER | EVALUATE | TEST | CONSULT
353 Christian Street, Unit #13
Oxford, CT 06478
TEL: 203 262 9245
FAX: 203 262 9243
WWW.NEMOETC.COM

Drawn by: Rick Boyette
P.E. Review

ROBERT NIEMINEN LICENSE No 59166 03/10/2020 STATE OF FLORIDA PROFESSIONAL ENGINEER

Company Name

CertainTeed SAINT-GOBAIN
803 Belden Road
Jackson, Michigan 49203
Neil J. Sexton, AIA
Compliance & Technical Services Manager
Phone: 517-780-3185

Rev #	Description	Date
1	18-0208.02	04/15/19
2	19-1202.04	03/05/20

Title:
CertainTeed Bufftech
Fence NOA No. 19-1202.04

Drawing: FENCING
Date: 03/05/2020
Scale: NTS
Sheet: 3 of 3