MIAMI-DADE COUNTY
PRODUCT CONTROL SECTION
11805 SW 26 Street, Room 208
Miami, Florida 33175-2474
T (786) 315-2590 F (786) 315-2599
www.miamidade.gov/economy

DEPARTMENT OF REGULATORY AND ECONOMIC RESOURCES (RER)
BOARD AND CODE ADMINISTRATION DIVISION

NOTICE OF ACCEPTANCE (NOA)

The Cookson Company
1901 South Litchfield Road
Goodyear, AZ 85338

SCOPE:

This NOA is being issued under the applicable rules and regulations governing the use of construction materials. The documentation submitted has been reviewed and accepted by Miami-Dade County RER-Product Control Section to be used in Miami-Dade County and other areas where allowed by the Authority Having Jurisdiction (AHJ).

This NOA shall not be valid after the expiration date stated below. The Miami-Dade County Product Control Section (In Miami-Dade County) and/ or the AHJ (in areas other than Miami-Dade County) reserve the right to have this product or material tested for quality assurance purposes. If this product or material fails to perform in the accepted manner, the manufacturer will incur the expense of such testing and the AHJ may immediately revoke, modify, or suspend the use of such product or material within their jurisdiction. RER reserves the right to revoke this acceptance if it is determined by Miami-Dade County Product Control Section that this product or material fails to meet the requirements of the applicable building code.

This product is approved as described herein and has been designed to comply with the Florida Building Code, including the High Velocity Hurricane Zone.

DESCRIPTION: Steel Rolling Door up to 14'-5" Wide (80 FPS Impact)

APPROVAL DOCUMENT: Drawing No. **ES-16-56-TCCI**, titled "14'-5" Wide 65 PSF 80 FPS Non-Insulated Rolling Steel Door", sheets 1 through 6 of 6, dated 09/10/2014, with revision B dated 01/23/2020, prepared by The Cookson Company, dated 01/12/18, signed and sealed by Shawn Patrick Kelley, P.E., bearing the Miami-Dade County Product Control renewal stamp with the Notice of Acceptance number and Expiration date by the Miami-Dade County Product Control Section.

MISSILE IMPACT RATING: Large and Small Missile Impact Resistant

LABELING: A permanent label with the manufacturer's name or logo, one of the 2 manufacturing addresses on drawings, model number, the positive and negative design pressure rating, indicate impact rated if applicable, installation instruction drawing reference number, approval number (NOA), the applicable test standards, and the statement reading 'Miami-Dade County Product Control Approved' is to be located on the door's side track, bottom angle, or inner surface of a panel.

RENEWAL of this NOA shall be considered after a renewal application has been filed and there has been no change in the applicable building code negatively affecting the performance of this product.

TERMINATION of this NOA will occur after the expiration date or if there has been a revision or change in the materials, use, and/or manufacture of the product or process. Misuse of this NOA as an endorsement of any product, for sales, advertising or any other purposes shall automatically terminate this NOA. Failure to comply with any section of this NOA shall be cause for termination and removal of NOA.

ADVERTISEMENT: The NOA number preceded by the words Miami-Dade County, Florida, and followed by the expiration date may be displayed in advertising literature. If any portion of the NOA is displayed, then it shall be done in its entirety.

INSPECTION: A copy of this entire NOA shall be provided to the user by the manufacturer or its distributors and shall be available for inspection at the job site at the request of the Building Official.

This NOA **renews NOA # 18-0125.02** and consists of this page 1 and evidence pages E-1 and E-2, as well as approval document mentioned above.

The submitted documentation was reviewed by **Carlos M. Utrera, P.E.**

MIAMI-DADE COUNTY APPROVED

The Cookson Company

NOTICE OF ACCEPTANCE: EVIDENCE SUBMITTED

1. EVIDENCE SUBMITTED UNDER PREVIOUS NOA's

A. DRAWINGS *"Submitted under NOA # 15-0112.04"*

1. Drawing No. **ES-16-56-TCCI**, titled "14'-5" Wide 65 PSF 80 FPS Non-Insulated Rolling Steel Door", sheets 1 through 6 of 6, dated 09/10/2014, with revision **A** dated 03/27/2015, prepared by The Cookson Company, signed and sealed by Joseph H. Dixon, Jr., P.E.

B. TESTS *"Submitted under NOA # 15-0112.04"*

1. Test reports on 1) Uniform Static Air Pressure Test, Loading per FBC, TAS 202-94
2) Large Missile Impact Test per FBC, TAS 201-94 (Level 'E')
3) Cyclic Wind Pressure Loading per FBC, TAS 203-94
4) Forced Entry Test, per FBC, TAS 202-94
5) Tensile Test per ASTM E8-08,

along with marked-up drawings and installation diagram of C20 Roll-up Garage Doors, prepared by Intertek/Architectural Testing, Inc., compliance letter and Test Report No. **D1278.01-109-18**, dated 01/29/2014, with revision **1** dated 03/25/2015, signed and sealed by Michael D. Stremmel, P.E.

2. Test report on Salt Spray Performance Test per ASTM B117-09 of G90 unpainted and G40 painted samples, prepared by Intertek, compliance letter and Test Report No. **G100075502MID-002**, dated 05/26/2010, signed and sealed by Rick Curkeet, P.E.

C. CALCULATIONS *"Submitted under NOA # 15-0112.04"*

1. Calculations prepared by Joseph H. Dixon, Jr., P.E., dated 10/03/2014, signed and sealed by Joseph H. Dixon, Jr., P.E.

D. QUALITY ASSURANCE

1. Miami-Dade Department of Regulatory and Economic Resources (RER)

E. MATERIAL CERTIFICATIONS

1. None.

F. STATEMENTS *"Submitted under NOA # 15-0112.04"*

1. Statement letter of code conformance to 2010 and 5th edition (2014) FBC issued by Joseph H. Dixon, Jr., P.E., dated 01/03/2015, signed and sealed by Joseph H. Dixon, Jr., P.E.

2. Statement letter of no financial interest issued by Joseph H. Dixon, Jr., P.E., dated 01/03/2015, signed and sealed by Joseph H. Dixon, Jr., P.E.

Carlos M. Utrera, P.E.
Product Control Examiner
NOA No. 20-0416.08
Expiration Date: July 9, 2025
Approval Date: May 14, 2020

NOTICE OF ACCEPTANCE: EVIDENCE SUBMITTED

2. NEW EVIDENCE SUBMITTED

A. DRAWINGS

1. Drawing No. **ES-16-56-TCCI**, titled "14'-5" Wide 65 PSF 80 FPS Non-Insulated Rolling Steel Door", sheets 1 through 6 of 6, dated 09/10/2014, with revision **A** dated 03/27/2015, prepared by The Cookson Company, dated 01/12/18, signed and sealed by Shawn Patrick Kelley, P.E.

B. TESTS

1. None.

C. CALCULATIONS

1. Calculations prepared by Moment Engineering+ Design, LLC, dated 01/12/2018, signed and sealed by Shawn Patrick Kelley, P.E.

D. QUALITY ASSURANCE

1. Miami-Dade Department of Regulatory and Economic Resources (RER)

E. MATERIAL CERTIFICATIONS

1. None.

F. STATEMENTS

1. Statement letter of code conformance to **FBC 6th Edition (2017)**, and of no financial interest, dated March 21, 2020, issued by Moment Engineering+ Design, LLC, signed and sealed by Shawn Patrick Kelley, P.E.

Carlos M. Utrera, P.E.
Product Control Examiner
NOA No. 20-0416.08
Expiration Date: July 9, 2025
Approval Date: May 14, 2020

L'TR	REVISION	DATE	BY	E.C.O.
*	ORIGINAL ISSUE	09/10/2014	TJE	1614
A	REVISED NOTES	03/27/2015	TJE	1614
B	REVISED TITLE BLOCK; HOOD SUPPORT UPDATE	01/23/2020	MAN	2026

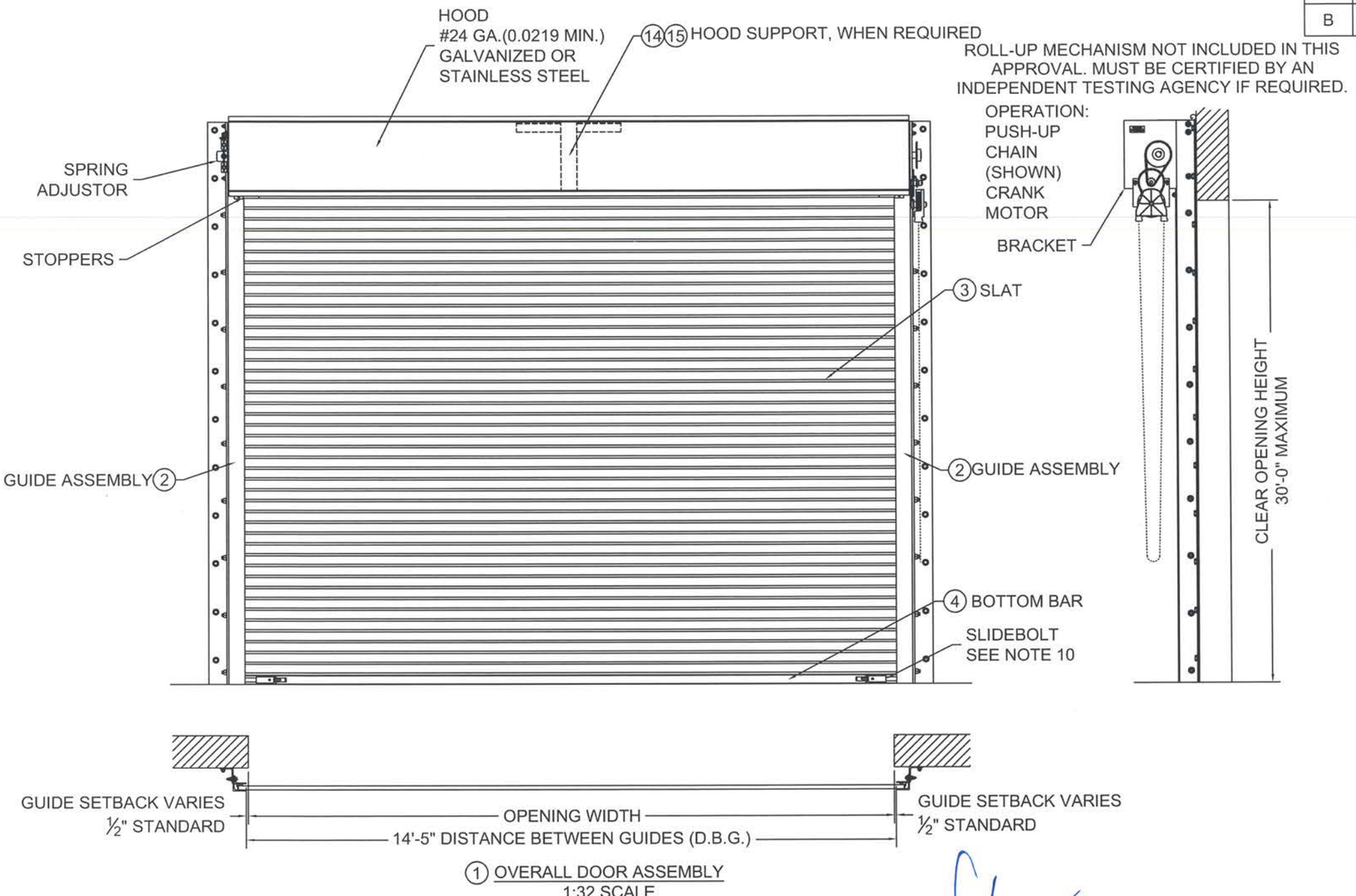

(1) OVERALL DOOR ASSEMBLY
1:32 SCALE

NOTES:

1. THIS ROLL-UP DOOR SYSTEM IS DESIGNED IN ACCORDANCE WITH THE FLORIDA BUILDING CODE, AS A LARGE MISSILE IMPACT RESISTANT SYSTEM.
2. POSITIVE AND NEGATIVE DESIGN PRESSURE CALCULATIONS SHALL BE PERFORMED FOR SPECIFIC JOBS IN ACCORDANCE WITH ASCE 7 *MINIMUM DESIGN LOADS FOR BUILDINGS AND OTHER STRUCTURES*. WIND LOADS DETERMINED FOR OPENINGS SHALL BE LESS THAN OR EQUAL TO DOOR DESIGN PRESSURES NOTED BELOW.
3. THE DETAILS AND SPECIFICATIONS SHOWN HEREIN REPRESENT THE PRODUCTS TESTED FOR UNIFORM STATIC AIR PRESSURE IN CONFORMANCE WITH DADE COUNTY PROTOCOLS TAS 201, 202 AND 203.
   POSITIVE DESIGN LOAD = 65 PSF
   NEGATIVE DESIGN LOAD = 65 PSF
4. TESTING PERFORMED BY ARCHITECTURAL TESTING, INC. (YORK, PENNSYLVANIA) TEST REPORT No. D1278.01-109-18.
5. SUPERIMPOSED LOADS ON THE JAMBS FROM THIS DOOR ARE DESIGNATED AS F1, F2, AND F3 HEREIN. CONTRACTORS SHALL HAVE FLORIDA REGISTERED PROFESSIONAL ENGINEER VERIFY ADEQUACY OF BUILDING STRUCTURE TO RESIST SUPERIMPOSED LOAD FI, F2, AND F3.
6. ALL WELDING SHALL BE PERFORMED BY QUALIFIED WELDERS IN ACCORDANCE WITH AWS SPECIFICATIONS, LATEST EDITION. ALL WELDING ELECTRODES SHALL CONFORM TO AWS A5.1, GRADE E-70. MINIMUM WELDING PROCESS SHALL BE ARC WELDING AWS E7014 OR MIG WELDING AWS ER70S-6.
7. ANCHOR NOTES:
   A. EMBEDMENT DEPTH DOES NOT INCLUDE STUCCO FINISH.
   B. ANCHORS SHALL BE INSTALLED IN ACCORDANCE WITH MANUFACTURERS SPECIFICATIONS.
8. DOOR MAY BE INSTALLED ON THE INSIDE OR OUTSIDE OF AN EXTERIOR WALL.
9. A 33% INCREASE IN ALLOWABLE STRESS HAS NOT BEEN USED IN THE DESIGN OF THIS PRODUCT.
10. SLIDE BOLTS ARE NOT REQUIRED FOR WINDLOAD RESISTANCE. SLIDE BOLTS ARE ONLY REQUIRED ON PUSH UP OPERATED UNITS FOR FORCED ENTRY RESISTANCE. LOCKING IS TO BE PROVIDED BY OTHERS OR AS CYLINDER LOCKS BY THE COOKSON COMPANY.
11. ENDLOCK/WINDLOCKS AND WINDLOCKS ARE SECURED TO EACH END OF ALTERNATING SLATS WITH 3 1/4" RIVETS PER END RESULTING IN CONTINUOUS SLAT WINDLOCK SUPPORT.
12. GUIDE ASSEMBLY AND BOTTOM BAR ARE TO BE PROTECTED FROM CORROSION WITH POLYESTER POWDER COATING WHEN NOT MINIMUM G90 GALVANIZED STEEL OR STAINLESS STEEL.

PRODUCT RENEWED
as complying with the Florida Building Code
NOA-No. 20-0416.08
Expiration Date 07/09/2025
By
Miami-Dade Product Control

SHAWN PATRICK KELLEY
LICENSE
NO. 58299
MAR 18 2020
STATE OF FLORIDA
PROFESSIONAL ENGINEER

COOKSON Preferred door solutions.
24 ELMWOOD AVE 1901 S. LITCHFIELD RD
MOUNTAINTOP, PA GOODYEAR, AZ
P: 800.390.8590
F: 866.448.6798
E: ADS@COOKSONDOOR.COM

Unless otherwise specified, dimensions are in inches & tolerances are:
0.000 = +/- 0.031
FRACTIONAL = +/- 1/32
ANGLES = +/- 1/2 DEG

TITLE: MIAMI DADE COUNTY APPROVED
14'-5" WIDE 65 PSF 80 FPS
NON-INSULATED ROLLING STEEL DOOR

DRAWN BY:	SIZE:	SCALE:	SHEET:
TJE	B	AS NOTED	1/6

DWG NO: ES-16-56-TCCI

L'TR	REVISION	DATE	BY	E.C.O.
*	ORIGINAL ISSUE	09/10/2014	TJE	1614
A	REVISED NOTES	03/27/2015	TJE	1614
B	REVISED TITLE BLOCK; HOOD SUPPORT UPDATE	01/23/2020	MAN	2026

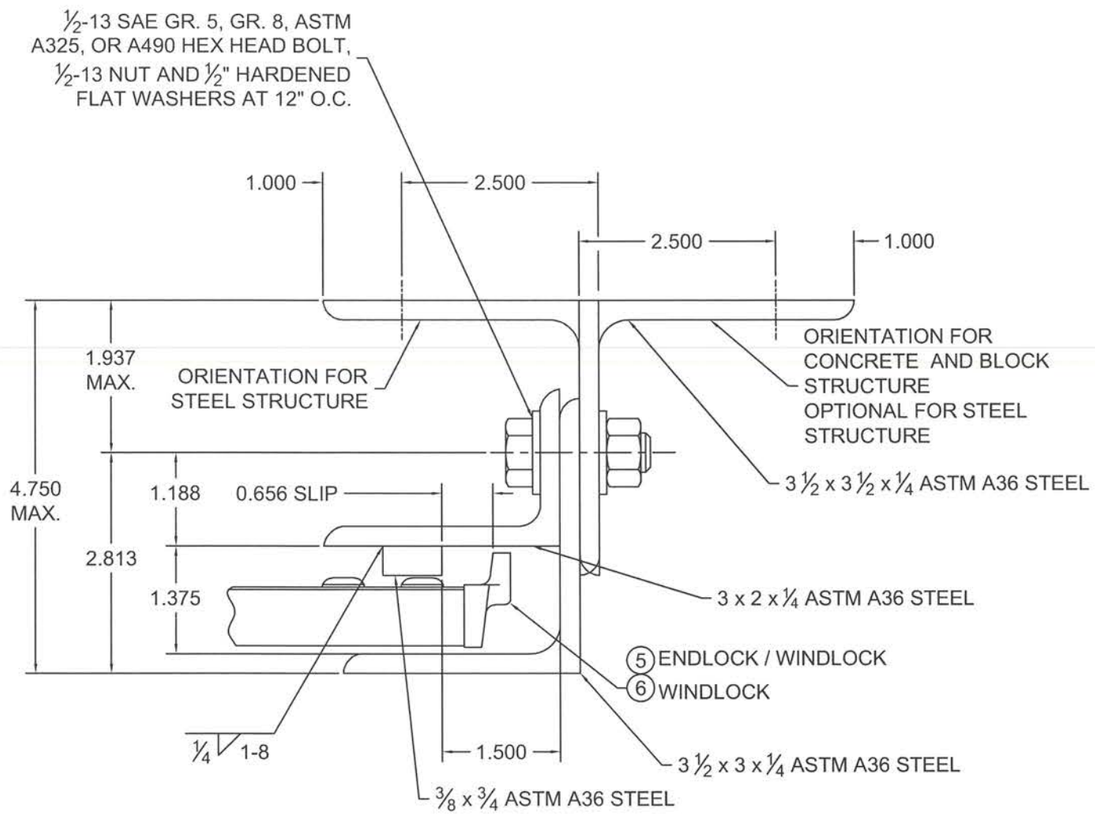

② GUIDE ASSEMBLY DETAIL
1:2 SCALE

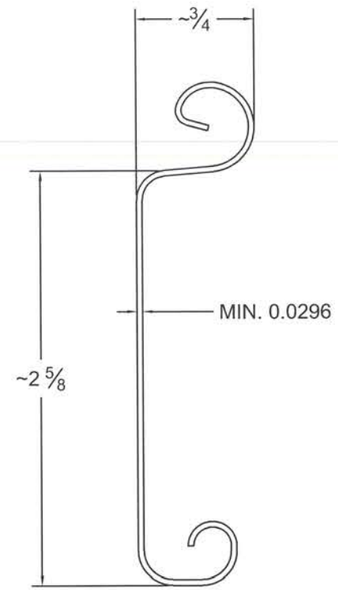

③ SLAT DETAIL
TYPICAL SECTION
ASTM A653 HSLAS TYPE B GRADE 40 G40 WITH POLYESTER BASED COATING OR
ASTM A653 HSLAS TYPE A GRADE 40 G40 WITH POLYESTER BASED COATING OR
ASTM A653 STRUCTURAL STEEL GRADE 40 G40 WITH POLYESTER BASED COATING
OR TYPE 304 STAINLESS STEEL (MIN. YIELD 40,000 psi)
OR TYPE 316 STAINLESS STEEL (MIN. YIELD 40,000 psi)
OR TYPE 430 STAINLESS STEEL (MIN. YIELD 40,000 psi)
OR TYPE 201 STAINLESS STEEL (MIN. YIELD 40,000 psi)
FULL SCALE

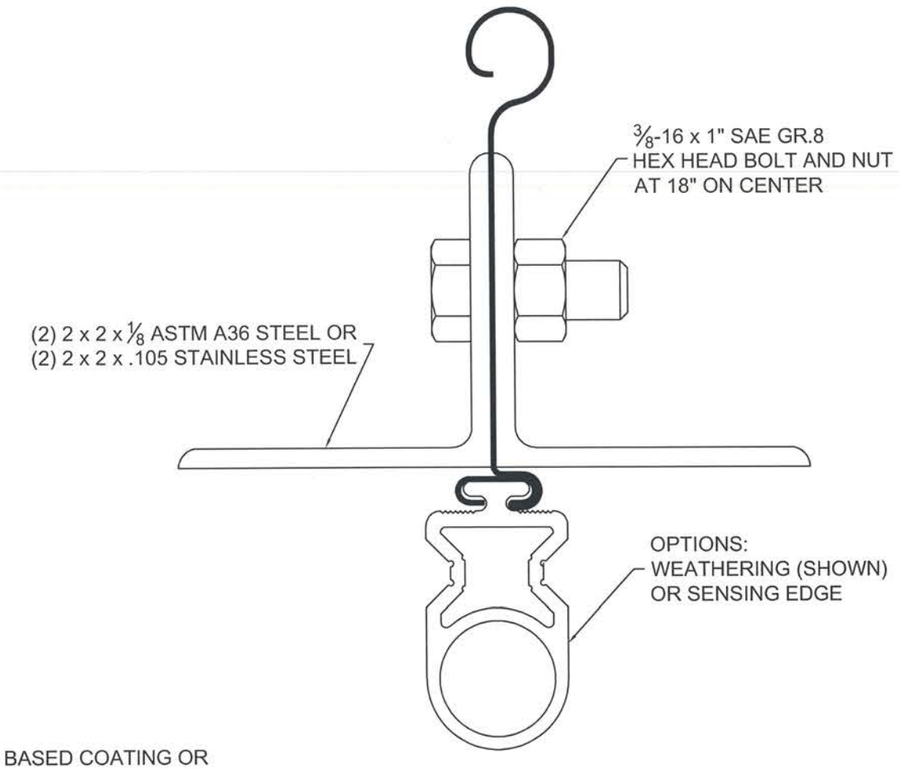

④ BOTTOM BAR DETAIL
TYPICAL SECTION
FULL SCALE

PRODUCT RENEWED
as complying with the Florida Building Code
NOA-No. 20-0416.08
Expiration Date 07/09/2025
By
Miami-Dade Product Control

SHAWN PATRICK KELLEY
LICENSE
No 58299
MAR 18 2020
STATE OF FLORIDA
PROFESSIONAL ENGINEER

COOKSON Preferred door solutions.

24 ELMWOOD AVE 1901 S. LITCHFIELD RD
MOUNTAINTOP, PA GOODYEAR, AZ

P: 800.390.8590
F: 866.448.6798
E: ADS@COOKSONDOOR.COM

Unless otherwise specified, dimensions are in inches & tolerances are:

0.000 = +/- 0.031
FRACTIONAL = +/- 1/32
ANGLES = +/- 1/2 DEG

TITLE: MIAMI DADE COUNTY APPROVED
14'-5" WIDE 65 PSF 80 FPS
NON-INSULATED ROLLING STEEL DOOR

DRAWN BY:	SIZE:	SCALE:	SHEET:
TJE	B	AS NOTED	2/6

DWG NO: ES-16-56-TCCI

L'TR	REVISION	DATE	BY	E.C.O.
*	ORIGINAL ISSUE	09/10/2014	TJE	1614
A	REVISED NOTES	03/27/2015	TJE	1614
B	REVISED TITLE BLOCK; HOOD SUPPORT UPDATE	01/23/2020	MAN	2026

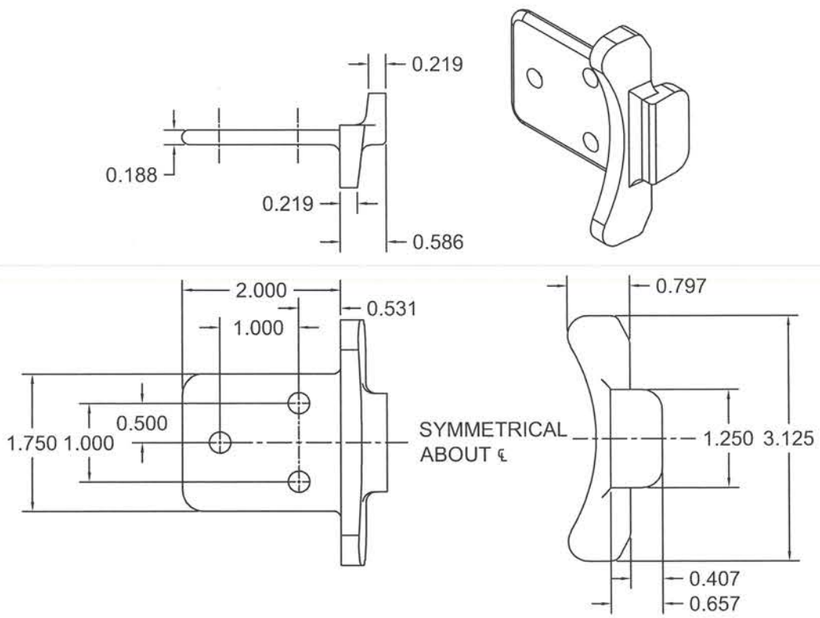

⑤ ENDLOCK / WINDLOCK DETAIL
CAST MALLEABLE IRON ASTM A47, GRADE 32510, OR
DUCTILE IRON PER ASTM A536 GRADE 65-45-12, GALVANIZED IN ACCORDANCE WITH
ASTM A123, GRADE 85 ZINC-COATING
1/2 SCALE

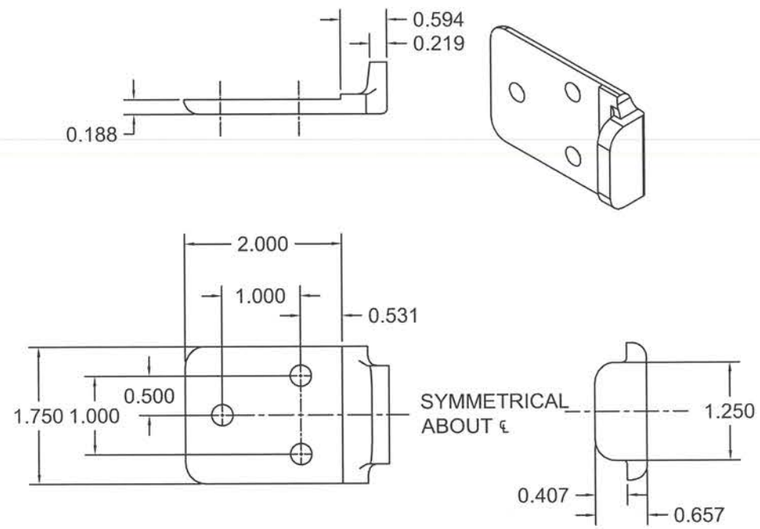

⑥ WINDLOCK DETAIL
CAST MALLEABLE IRON ASTM A47, GRADE 32510, OR
DUCTILE IRON PER ASTM A536 GRADE 65-45-12, GALVANIZED IN
ACCORDANCE WITH ASTM A123, GRADE 85 ZINC-COATING
1/2 SCALE

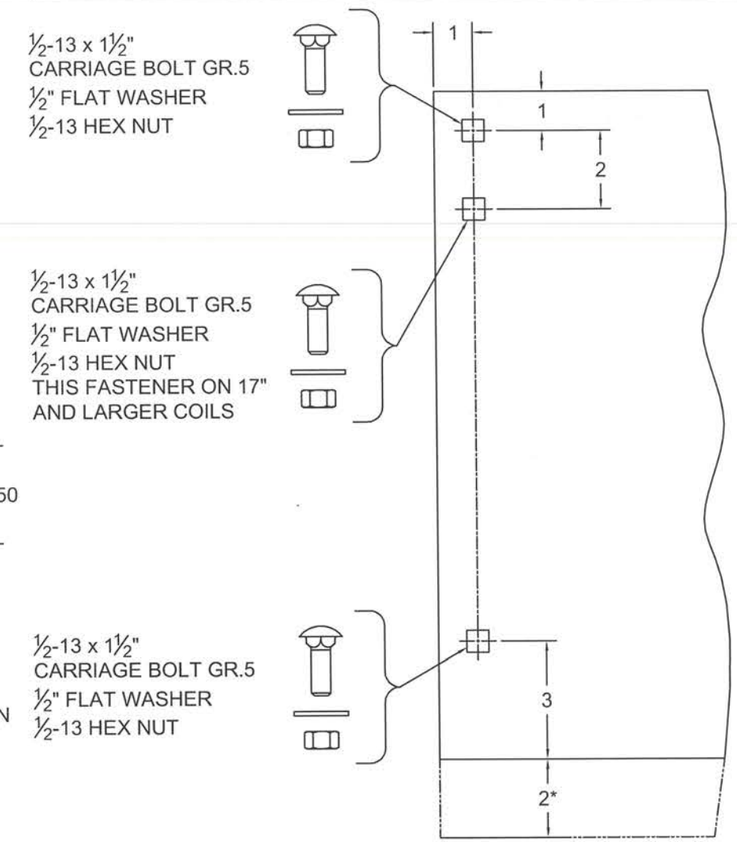

⑦ BRACKET MOUNTING DETAIL
0.172 MIN. THICKNESS
* 2" EXTENSION WHEN 8" AND LARGER SHAFT ASSEMBLY IS SUPPLIED
1/4 SCALE

PRODUCT RENEWED
as complying with the Florida Building Code
NOA-No. 20-0416.08
Expiration Date 07/09/2025
By
Miami-Dade Product Control

SHAWN PATRICK KELLEY
LICENSE
No 58299
MAR 18 2020
STATE OF FLORIDA
PROFESSIONAL ENGINEER

COOKSON Preferred door solutions.

24 ELMWOOD AVE 1901 S. LITCHFIELD RD
MOUNTAINTOP, PA GOODYEAR, AZ

P: 800.390.8590
F: 866.448.6798
E: ADS@COOKSONDOOR.COM

Unless otherwise specified, dimensions are in inches & tolerances are:

0.000 = +/- 0.031
FRACTIONAL = +/- 1/32
ANGLES = +/- 1/2 DEG

TITLE: MIAMI DADE COUNTY APPROVED
14'-5" WIDE 65 PSF 80 FPS
NON-INSULATED ROLLING STEEL DOOR

DRAWN BY:	SIZE:	SCALE:	SHEET:
TJE	B	AS NOTED	3/6

DWG NO: ES-16-56-TCCI

CONCRETE FASTENER SPACING			
CONCRETE STRENGTH (psi)	MAXIMUM FASTENER SPACING (in.)		
	HILTI	SIMPSON	ITW REDHEAD
2000	4	4 3/4	-
3000	5	6	3 1/8
4000	6	7	6 1/2

L'TR	REVISION	DATE	BY	E.C.O.
*	ORIGINAL ISSUE	09/10/2014	TJE	1614
A	REVISED NOTES	03/27/2015	TJE	1614
B	REVISED TITLE BLOCK; HOOD SUPPORT UPDATE	01/23/2020	MAN	2026

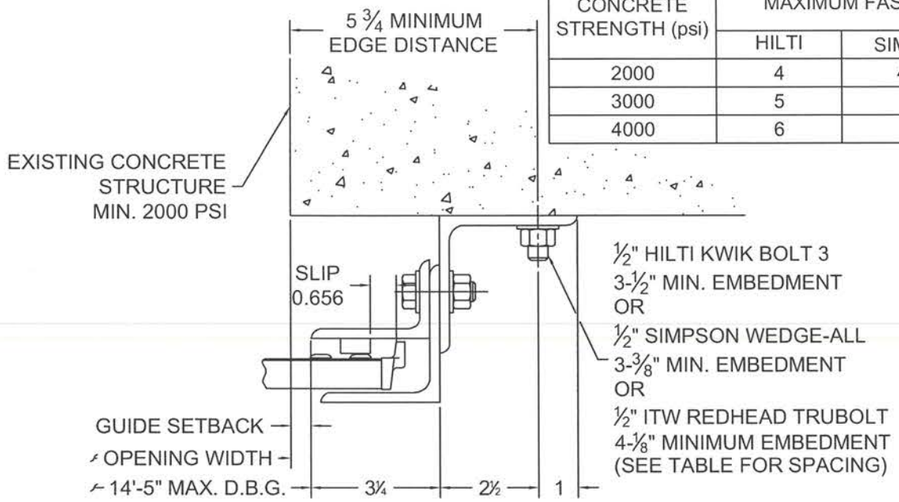

(8) GUIDE ASSEMBLY
CONCRETE STRUCTURE
(Z-GUIDE)

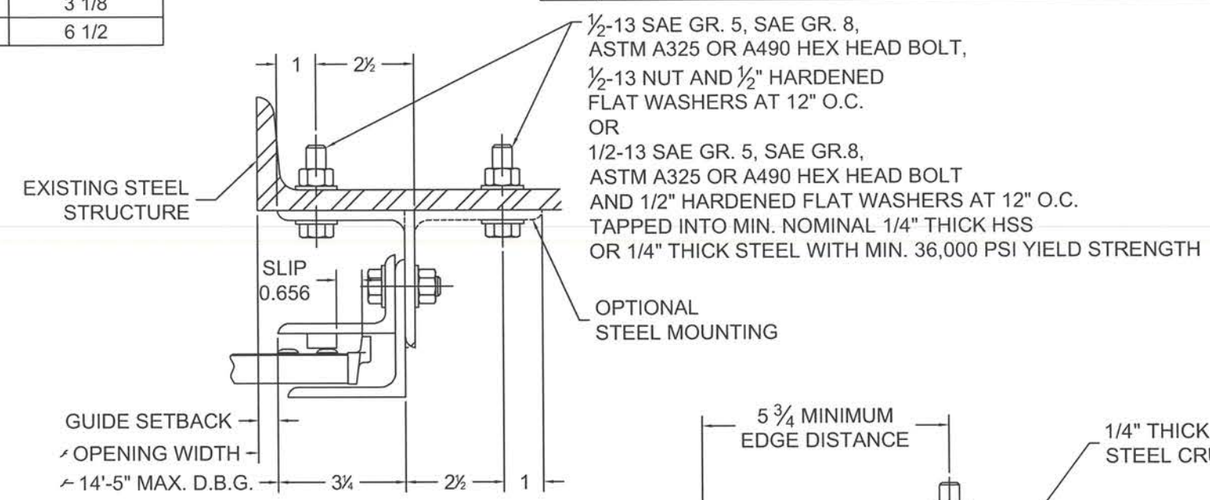

(9) GUIDE ASSEMBLY
STEEL STRUCTURE
(Z-GUIDE OR E-GUIDE)

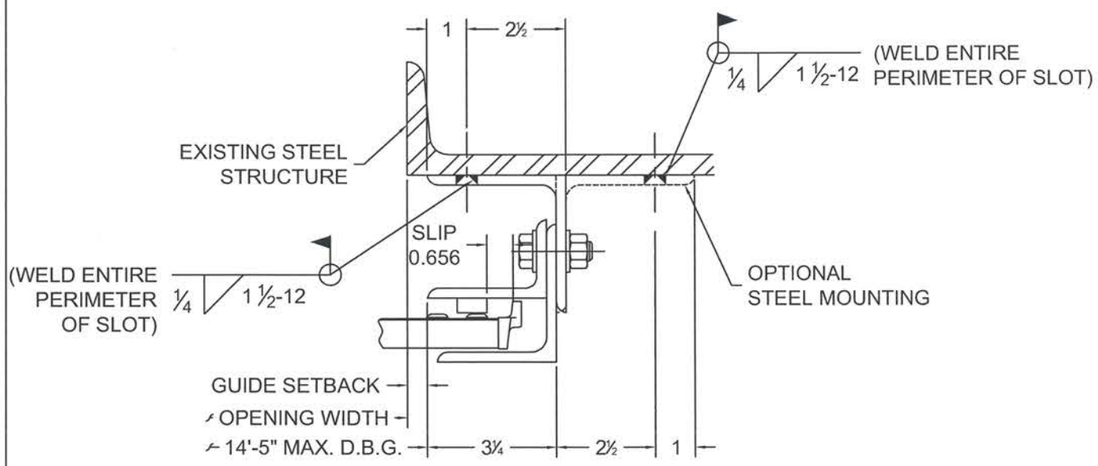

(10) GUIDE ASSEMBLY
STEEL STRUCTURE
(Z-GUIDE OR E-GUIDE)

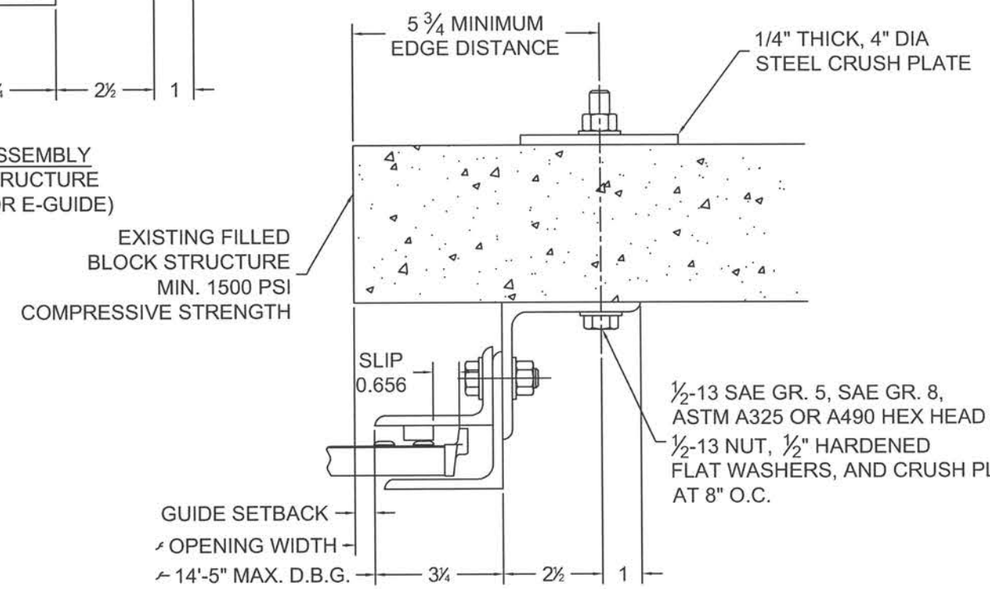

(11) GUIDE ASSEMBLY
FILLED BLOCK STRUCTURE
(Z-GUIDE)

PRODUCT RENEWED
as complying with the Florida Building Code
NOA-No. 20-0416.08
Expiration Date 07/09/2025
By _____
Miami-Dade Product Control

SHAWN PATRICK KELLY
LICENSE
No 58299
MAR 18 2020
STATE OF FLORIDA
PROFESSIONAL ENGINEER

COOKSON Preferred door solutions.

24 ELMWOOD AVE MOUNTAINTOP, PA
1901 S. LITCHFIELD RD GOODYEAR, AZ

P: 800.390.8590
F: 866.448.6798
E: ADS@COOKSONDOOR.COM

Unless otherwise specified, dimensions are in inches & tolerances are:
0.000 = +/- 0.031
FRACTIONAL = +/- 1/32
ANGLES = +/- 1/2 DEG

TITLE: MIAMI DADE COUNTY APPROVED 14'-5" WIDE 65 PSF 80 FPS NON-INSULATED ROLLING STEEL DOOR

DRAWN BY:	SIZE:	SCALE:	SHEET:
TJE	B	AS NOTED	4/6

DWG NO: ES-16-56-TCCI

L'TR	REVISION	DATE	BY	E.C.O.
*	ORIGINAL ISSUE	09/10/2014	TJE	1614
A	REVISED NOTES	03/27/2015	TJE	1614
B	REVISED TITLE BLOCK; HOOD SUPPORT UPDATE	01/23/2020	MAN	2026

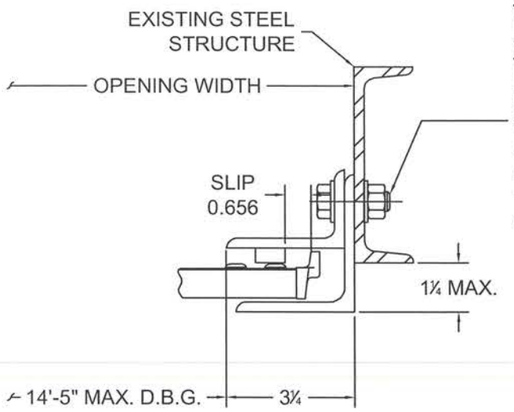

½-13 SAE GR. 5, SAE GR. 8, ASTM A325 OR A490 HEX HEAD BOLT, ½-13 NUT AND ½" HARDENED FLAT WASHERS AT 12" O.C.
OR
1/2-13 SAE GR. 5, SAE GR.8, ASTM A325 OR A490 HEX HEAD BOLT AND 1/2" HARDENED FLAT WASHERS AT 12" O.C. TAPPED INTO MIN. NOMINAL 1/4" THICK HSS OR 1/4" THICK STEEL WITH MIN. 36,000 PSI YIELD STRENGTH

(12) GUIDE ASSEMBLY
STEEL STRUCTURE
(BETWEEN JAMBS GUIDE)

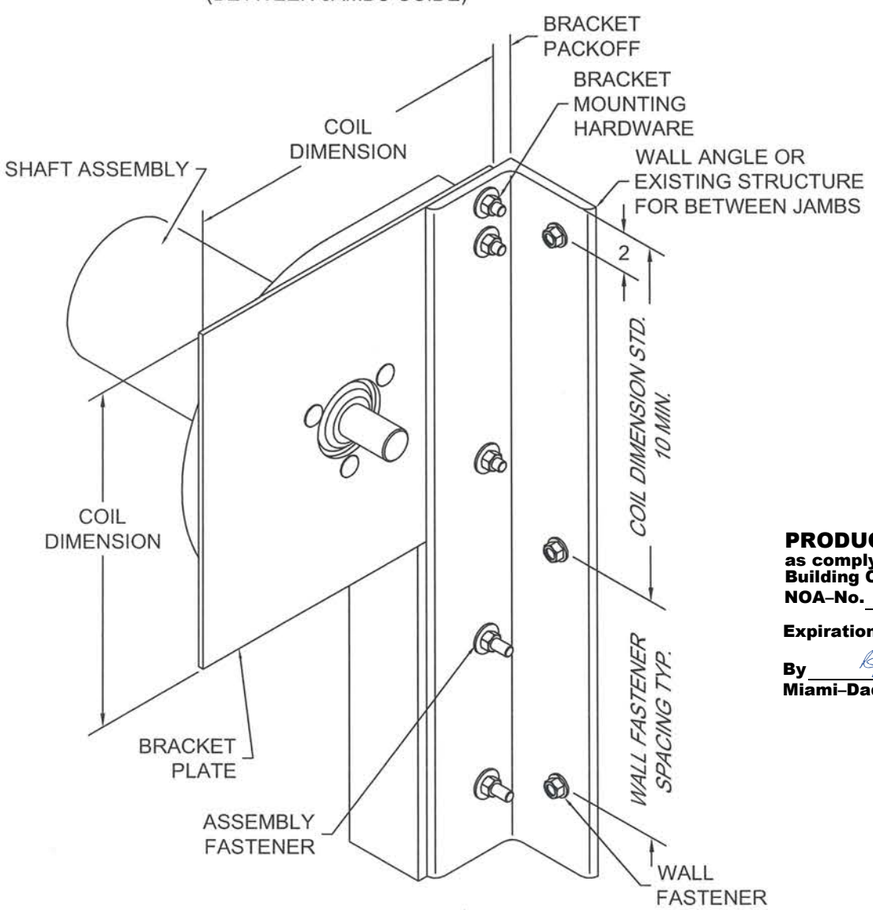

(13) BRACKET MOUNTING / TOP WALL ANGLE FASTENING
BRACKET MOUNTING PER DETAIL 7 DEPICTED, OTHER BRACKET MOUNTINGS ARE AVAILABLE
SCALE: NTS

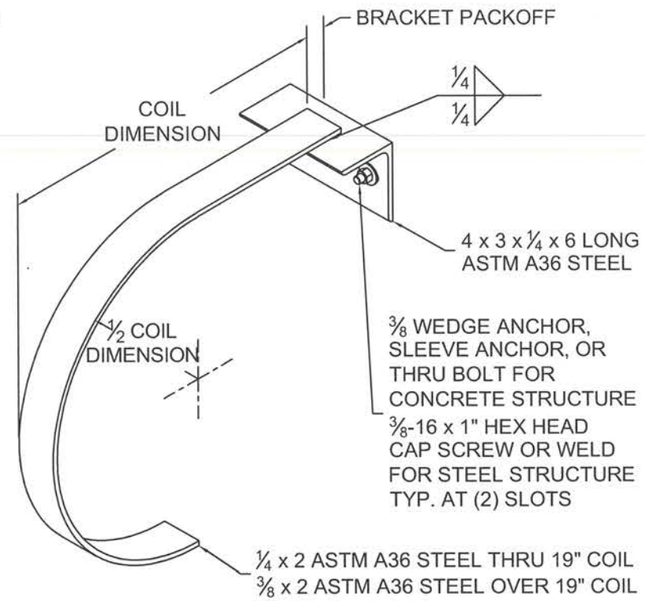

(14) MID-HOOD SUPPORT
(WHEN REQUIRED)
"D" SHAPE DEPICTED, SQUARE STYLE ALSO AVAILABLE
SCALE: NTS

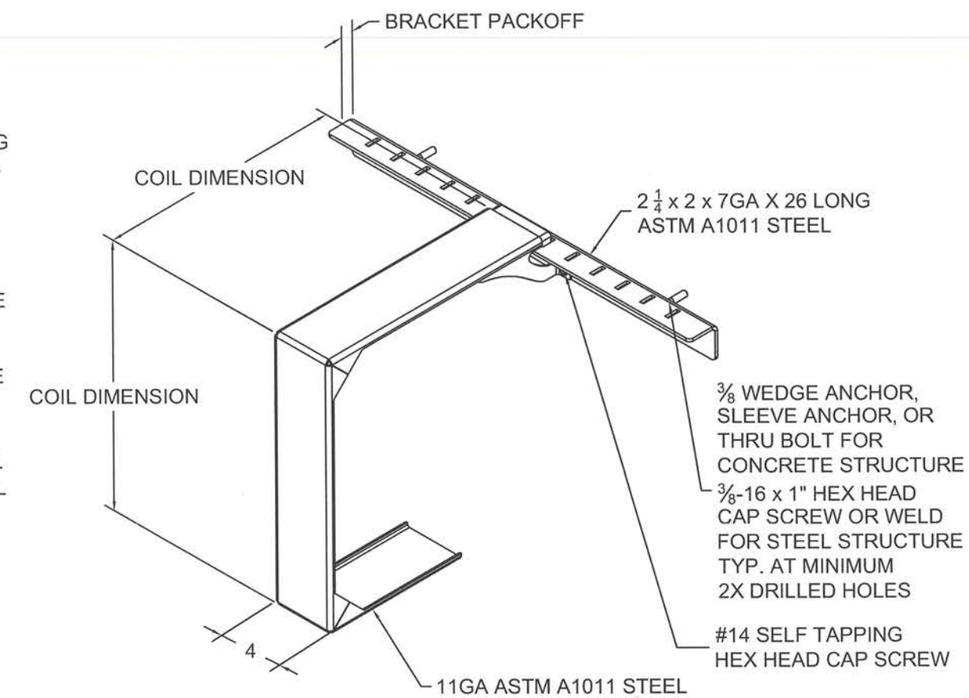

(15) MID-HOOD SUPPORT
(WHEN REQUIRED)
SQUARE STYLE DEPICTED, "D" SHAPE ALSO AVAILABLE
SCALE: NTS

PRODUCT RENEWED
as complying with the Florida Building Code
NOA-No. 20-0416.08
Expiration Date 07/09/2025
By _____
Miami-Dade Product Control

SHAWN PATRICK KELLEY
LICENSE
No. 58299
MAR 18 2020
STATE OF FLORIDA
PROFESSIONAL ENGINEER

COOKSON Preferred door solutions.

24 ELMWOOD AVE 1901 S. LITCHFIELD RD
MOUNTAINTOP, PA GOODYEAR, AZ

P: 800.390.8590
F: 866.448.6798
E: ADS@COOKSONDOOR.COM

Unless otherwise specified, dimensions are in inches & tolerances are:
0.000 = +/- 0.031
FRACTIONAL = +/- 1/32
ANGLES = +/- 1/2 DEG

TITLE: MIAMI DADE COUNTY APPROVED 14'-5" WIDE 65 PSF 80 FPS NON-INSULATED ROLLING STEEL DOOR

DRAWN BY:	SIZE:	SCALE:	SHEET:
TJE	B	AS NOTED	5/6

DWG NO: ES-16-56-TCCI

L'TR	REVISION	DATE	BY	E.C.O.
*	ORIGINAL ISSUE	09/10/2014	TJE	1614
A	REVISED NOTES	03/27/2015	TJE	1614
B	REVISED TITLE BLOCK; HOOD SUPPORT UPDATE	01/23/2020	MAN	2026

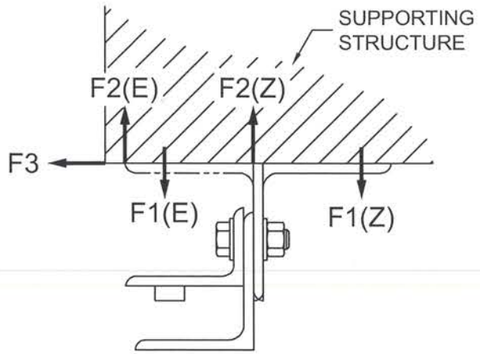

Z OR E GUIDE

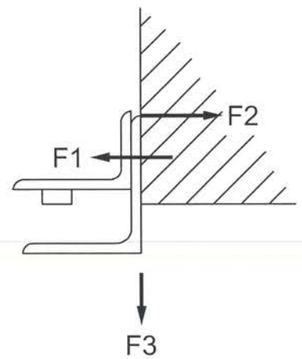

BETWEEN JAMBS GUIDE

UNREDUCED WIND FORCES ON BUILDING STRUCTURE (LBS / FOOT OF HEIGHT)					
Z-GUIDE					
POSITIVE			NEGATIVE		
F1	F2	F3	F1	F2	F3
1986	1508	1913	3156	3634	1913
E-GUIDE					
POSITIVE			NEGATIVE		
F1	F2	F3	F1	F2	F3
6517	6039	1913	6338	6816	1913
BETWEEN JAMBS GUIDE					
POSITIVE			NEGATIVE		
F1	F2	F3	F1	F2	F3
3745	1832	478	8004	6091	478

BUILDING DESIGNER NOTE:
STRUCTURE MUST BE DESIGNED TO SUPPORT F1, F2, AND F3 FORCES (LBS./FT. OF OPENING HEIGHT) AT EACH JAMB.

PRODUCT RENEWED
as complying with the Florida Building Code
NOA-No. 20-0416.08
Expiration Date 07/09/2025
By _____
Miami-Dade Product Control

SHAWN PATRICK KELLEY
LICENSE
No. 58299
MAR 18 2020
STATE OF FLORIDA
PROFESSIONAL ENGINEER

COOKSON Preferred door solutions.

24 ELMWOOD AVE 1901 S. LITCHFIELD RD
MOUNTAINTOP, PA GOODYEAR, AZ

P: 800.390.8590
F: 866.448.6798
E: ADS@COOKSONDOOR.COM

Unless otherwise specified, dimensions are in inches & tolerances are:

0.000 = +/- 0.031
FRACTIONAL = +/- 1/32
ANGLES = +/- 1/2 DEG

TITLE: MIAMI DADE COUNTY APPROVED 14'-5" WIDE 65 PSF 80 FPS NON-INSULATED ROLLING STEEL DOOR

DRAWN BY:	SIZE:	SCALE:	SHEET:
TJE	B	AS NOTED	6/6

DWG NO: ES-16-56-TCCI