MIAMI-DADE COUNTY
DEPARTMENT OF REGULATORY AND ECONOMIC RESOURCES (RER)
BOARD AND CODE ADMINISTRATION DIVISION

MIAMI-DADE COUNTY
PRODUCT CONTROL SECTION
11805 SW 26 Street, Room 208
Miami, Florida 33175-2474
T (786) 315-2590 F (786) 315-2599
www.miamidade.gov/economy

NOTICE OF ACCEPTANCE (NOA)

James Hardie Building Product, Inc.
10901 Elm Avenue
Fontana, CA 92337

SCOPE:
This NOA is being issued under the applicable rules and regulations governing the use of construction materials. The documentation submitted has been reviewed and accepted by Miami-Dade County RER - Product Control Section to be used in Miami Dade County and other areas where allowed by the Authority Having Jurisdiction (AHJ).

This NOA shall not be valid after the expiration date stated below. The Miami-Dade County Product Control Section (In Miami Dade County) and/or the AHJ (in areas other than Miami Dade County) reserve the right to have this product or material tested for quality assurance purposes. If this product or material fails to perform in the accepted manner, the manufacturer will incur the expense of such testing and the AHJ may immediately revoke, modify, or suspend the use of such product or material within their jurisdiction. RER reserves the right to revoke this acceptance if it is determined by Miami-Dade County Product Control Section that this product or material fails to meet the requirements of the applicable building code.

This product is approved as described herein and has been designed to comply with the High Velocity Hurricane Zone of the Florida Building Code.

DESCRIPTION: Artisan Lap Siding

APPROVAL DOCUMENT: Drawing No. 2008-8-7.vsd, titled " Artisan Lap Siding ", sheets 1 through 4 of 4, prepared by V. Andrew Tan, P.E., dated August 07, 2008, last revision #1 dated July 22, 2020, signed and sealed by V. Andrew Tan, P.E., bearing the Miami-Dade County Product Control Revision stamp with the Notice of Acceptance number and the expiration date by the Miami-Dade County Product Control Section.

MISSILE IMPACT RATING: Large and Small Missile Impact Resistant

LABELING: Each unit shall bear a permanent label with the manufacturer's name or logo, city, state and the following statement: "Miami-Dade County Product Control Approved", unless otherwise noted herein.

RENEWAL of this NOA shall be considered after a renewal application has been filed and there has been no change in the applicable building code negatively affecting the performance of this product.

TERMINATION of this NOA will occur after the expiration date or if there has been a revision or change in the materials, use, and/or manufacture of the product or process. Misuse of this NOA as an endorsement of any product, for sales, advertising or any other purposes shall automatically terminate this NOA. Failure to comply with any section of this NOA shall be cause for termination and removal of NOA.

ADVERTISEMENT: The NOA number preceded by the words Miami-Dade County, Florida, and followed by the expiration date may be displayed in advertising literature. If any portion of the NOA is displayed, then it shall be done in its entirety.

INSPECTION: A copy of this entire NOA shall be provided to the user by the manufacturer or its distributors and shall be available for inspection at the job site at the request of the Building Official.

This NOA **revises NOA # 18-0504.02** and consists of this page 1, evidence submitted pages E-1, E-2 & E-3 as well as approval document mentioned above.
The submitted documentation was reviewed by **Helmy A. Makar, P.E., M.S.**

MIAMI-DADE COUNTY APPROVED

Helmy A. Makar
11/26/2020

NOA No. 20-0730.07
Expiration Date: 10/02/2023
Approval Date: 11/26/2020

James Hardie Building Product, Inc.

NOTICE OF ACCEPTANCE: EVIDENCE SUBMITTED

1. EVIDENCE SUBMITTED UNDER PREVIOUS APPROVAL # 08-0514.11

A. DRAWINGS

1. *Drawing No. 2008-8-7.vsd, titled " Artisan Lap Siding ", sheets 1 through 4 of 4, prepared by Ronald I. Ogawa, P.E., dated August 07, 2008, last revision #1 dated August 27, 2008, signed and sealed by Ronald I. Ogawa, P.E.*

B. TESTS

1. *Test Report #MID3137643-01, by Intertek ETL Semko, dated January 30, 2008, per TAS 202 and TAS 203, signed and sealed by Rick Curkeet, P.E.*
2. *Test Report #MID3137643-03, by Intertek ETL Semko, dated April 16, 2008, per TAS 202 and TAS 203, signed and sealed by Rick Curkeet, P.E.*
3. *Test Report #3097158-009B, by Intertek ETL Semko, dated May 04, 2007, per Acceptance Criteria for Fiber Cement Siding used as Exterior Wall Siding, signed and sealed by Kal Kooner, EIT.*

C. CALCULATIONS

1. *None.*

D. QUALITY ASSURANCE

1. *By Miami-Dade County Building Code Compliance Office.*

E. MATERIAL CERTIFICATIONS

1. *Test Report #3099611SAT-001, by Intertek ETL Semko, dated June 28, 2006, per ASTM E84-05, Surface Burning Characteristics of Building Materials, signed by C. Anthony Penaloza, Flammability Testing Team Leader.*

2. EVIDENCE SUBMITTED UNDER PREVIOUS APPROVAL # 12-0517.05

A. DRAWINGS

1. *None.*

B. TESTS

1. *None.*

C. CALCULATIONS

1. *None.*

D. QUALITY ASSURANCE

1. *By Miami-Dade County Department of Regulatory and Economic Resources.*

E. MATERIAL CERTIFICATIONS

1. *None.*

Helmy A. Makar, P.E., M.S.
Product Control Section Supervisor
NOA No. 20-0730.07
Expiration Date: 10/02/2023
Approval Date: 11/26/2020

NOTICE OF ACCEPTANCE: EVIDENCE SUBMITTED

3. EVIDENCE SUBMITTED UNDER PREVIOUS APPROVAL # 15-0122.03

A. DRAWINGS

1. None.

B. TESTS

1. None.

C. CALCULATIONS

1. None.

D. QUALITY ASSURANCE

1. By Miami-Dade County Department of Regulatory and Economic Resources.

E. MATERIAL CERTIFICATIONS

1. None.

F. OTHERS

1. Florida Building Code, 2014 edition, compliance letter issued by R. I. Ogawa & Associates, Inc., dated March 17, 2015, signed and sealed by R. I. Ogawa, P.E.

4. EVIDENCE SUBMITTED UNDER PREVIOUS APPROVAL # 17-0821.20

A. DRAWINGS

1. None.

B. TESTS

1. None.

C. CALCULATIONS

1. None.

D. QUALITY ASSURANCE

1. By Miami-Dade County Department of Regulatory and Economic Resources.

E. MATERIAL CERTIFICATIONS

1. None.

F. OTHERS

1. Florida Building Code, 2017 edition, compliance letter issued by R. I. Ogawa & Associates, Inc., dated July 30, 2017, signed and sealed by R. I. Ogawa, P.E.

Helmy A. Makar, P.E., M.S.
Product Control Section Supervisor
NOA No. 20-0730.07
Expiration Date: 10/02/2023
Approval Date: 11/26/2020

NOTICE OF ACCEPTANCE: EVIDENCE SUBMITTED

5. EVIDENCE SUBMITTED UNDER PREVIOUS APPROVAL # 18-0504.02

A. DRAWINGS

1. None.

B. TESTS

1. None.

C. CALCULATIONS

1. None.

D. QUALITY ASSURANCE

1. By Miami-Dade County Department of Regulatory and Economic Resources.

E. MATERIAL CERTIFICATIONS

1. None.

F. OTHERS

1. Florida Building Code, 2017 edition, compliance letter issued by R. I. Ogawa & Associates, Inc., dated July 30, 2017, signed and sealed by R. I. Ogawa, P.E.

6. NEW EVIDENCE SUBMITTED

A. DRAWINGS

1. Drawing No. 2008-8-7.vsd, titled " Artisan Lap Siding ", sheets 1 through 4 of 4, prepared by V. Andrew Tan, P.E., dated August 07, 2008, last revision #1 dated July 22, 2020, signed and sealed by V. Andrew Tan, P.E.

B. TESTS

1. None.

C. CALCULATIONS

1. None.

D. QUALITY ASSURANCE

1. By Miami-Dade County Department of Regulatory and Economic Resources.

E. MATERIAL CERTIFICATIONS

1. None.

F. OTHERS

1. Florida Building Code, 2020 edition, compliance letter issued by V. Andrew Tan, P.E., dated July 22, 2020, signed and sealed by V. Andrew Tan, P.E.

Helmy A. Makar, P.E., M.S.
Product Control Section Supervisor
NOA No. 20-0730.07
Expiration Date: 10/02/2023
Approval Date: 11/26/2020

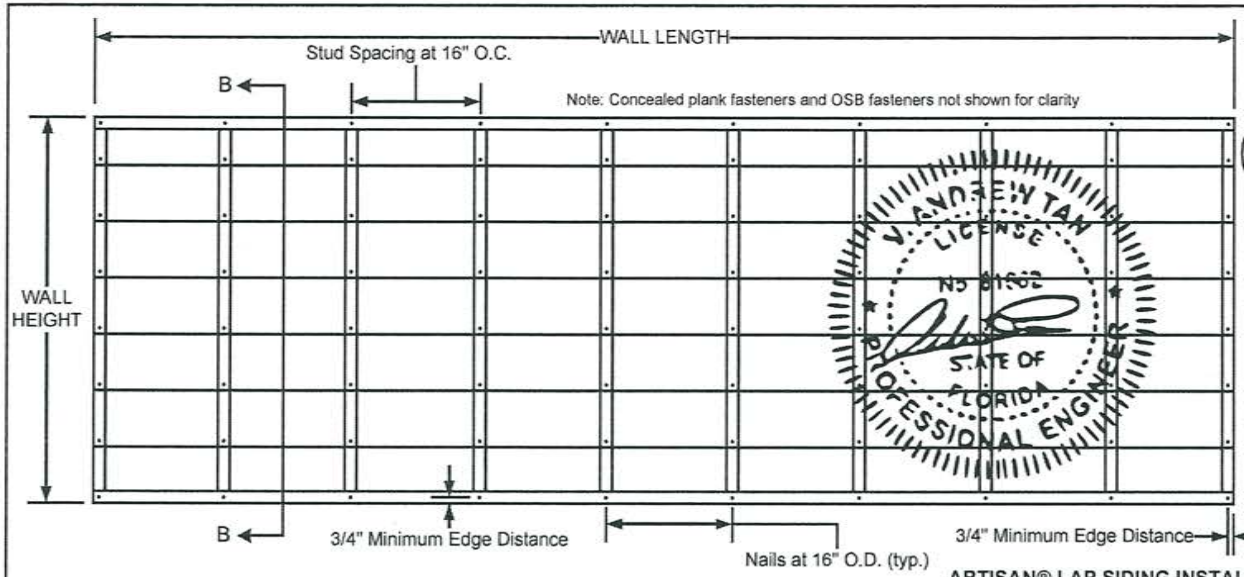

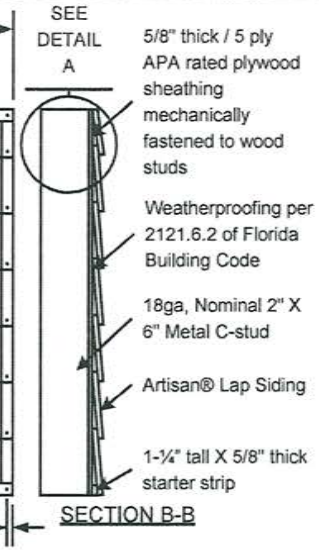

PRODUCT DESCRIPTION

Artisan® Lap Siding material is a nonasbestos fiber-cement product tested in accordance with ASTM C1186 Grade II, Type A and meeting the requirements of the Florida Building Code.

PLANK DIMENSIONS

Width	Length	Thickness
≤ 8-¼"	12'	5/8"

DESIGN PRESSURE RATING

Installation	Design Pressure
Wood Studs	-92 psf

Impact Resistant –
Planks installed over 5/8" thick / 5 ply APA rated plywood sheathing

DETAIL A

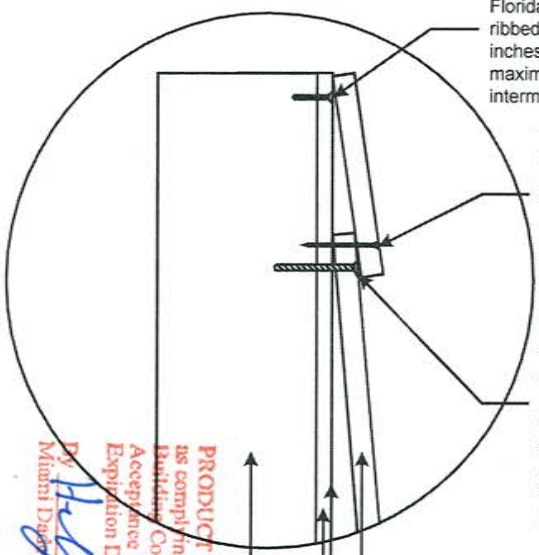

5/8" thick / 5 ply APA rated plywood sheathing shall be attached to the studs in accordance with the Florida Building Code, with Minimum #8 X 1" long ribbed bugle head screws, spaced a maximum of 6 inches on center along the perimeter and a maximum of 12 inches on center along the intermediate supports..

The exposed fastener shall be a minimum 0.075" shank X 2" long corrosion resistant metal stud finish nail (pin) over metal studs. The exposed fastener shall be placed in the overlapping area approximately ¾" from the bottom edge of the overlapping plank.

The concealed fastener shall be a minimum No. 8-18, 0.375" head diameter X 1-¾" long* bugle head screw over metal studs . The concealed fastener shall be fastened through the top edge of a single plank; the concealed fastener shall be positioned 1" down from the plank's top edge in such a way that the fastener is fully concealed by the next course of plank.
*or screw shall have at least 3 full threads penetrating metal framing

Artisan® Lap Siding

Weather-resistive barrier per Section 1404.2 of the Florida Building Code

5/8" thick / 5 ply APA rated plywood sheathing fastened according to the Florida Building Code

18ga, Nominal 2" X 6" Metal C-stud

ARTISAN® LAP SIDING INSTALLATION DETAILS

- All installation shall be done in conformance with this Notice of Acceptance, the manufacturer's installation recommendations, and the applicable sections of the Florida Building Code.
- Metal studs where Artisan® Lap Siding will be installed shall be designed by an Engineer or Architect per the Florida Building Code and the requirements of this N.O.A.
- Planks shall be applied horizontally commencing from the bottom course of the wall with 1-¼" wide laps at the top of the plank.
- The tounge and groove vertical joints must occur 4" off stud, do not nail within 2 inches of tongue and groove.
- The planks shall be installed over 5/8" thick / 5 ply APA rated plywood sheathing supported by a minimum of 18ga, Nominal 2" X 6" Metal C-studs spaced a maximum of 16" O.C.
- The siding shall be fastened over the studs with a combination of both concealed and exposed fasteners.
- The concealed fastener shall be a minimum No. 8-18, 0.375" head diameter X 1-¾" long* bugle head screw over metal studs. (*or screw shall have at least 3 full threads penetrating metal framing)
- The exposed fastener shall be a minimum 0.075" shank X 2" long corrosion resistant metal stud finish nail (pin) over metal studs.
- The concealed fastener shall be fastened through the top edge of a single plank; the concealed fastener shall be positioned 1" down from the plank's top edge in such a way that the fastener is fully concealed by the next course of plank.
- The exposed fastener shall be placed in the overlapping area approximately ¾" from the bottom edge of the overlapping plank.
- Both concealed and exposed fasteners shall be ≤ 7" O.C. vertically and 16" O.C. horizontally into metal studs through 5/8" thick / 5 ply APA rated plywood sheathing.
- A fastener edge distance of ¾" shall always be observed.
- 5/8" thick / 5 ply APA rated plywood sheathing shall be attached to the studs in accordance with the Florida Building Code, with minimum #8 X 1" long ribbed bugle head screws spaced a maximum of 6 inches on center along the perimeter and a maximum of 12 inches on center along the intermediate supports.

PRODUCT REVISED
as complying with the Florida Building Code
Acceptance No 20-0730.07
Expiration Date 10/02/2023
By
Miami Dade Product Control

JamesHardie

Artisan® Lap Siding (Metal Studs)

This drawing and the copyright therein are the property of the named company and accordingly the drawing must not be copied or reproduced in any material form whatsoever and must be returned with quotation and on completion of job

James Hardie Building Products, Inc.
10901 Elm Avenue
Fontana, CA 92337
Phone: 909-356-6300, Fax 909-427-0634

SIZE	FSCM NO	DWG NO	REV
A		Miami Dade NOA - Artisan Lap Siding- 2008-8-7.vsd	1

Creator: C. Diercks

SCALE	1/2" = 1'-0"	Date: 8/7/2008	SHEET	1 OF 4

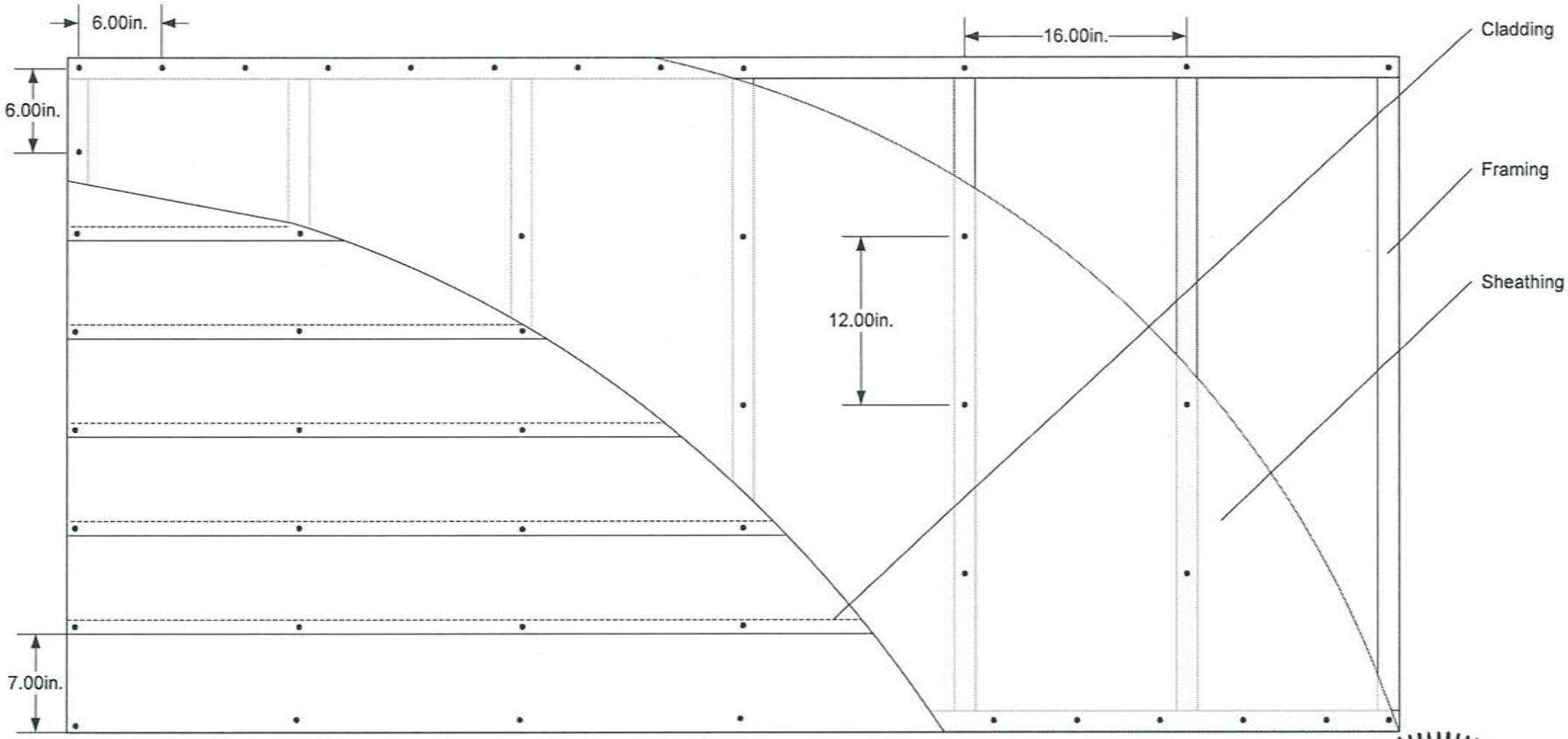

FRAMING

- NOMINAL 18 GAUGE 2" X 6" STEEL STUDS 16" O.C. FASTENED WITH NO. 8 X 1" LONG BUGLE HEAD SCREWS (2 PER TOP AND BOTTOM CONNECTION)

SHEATHING

- NOMINAL 5/8" THICK / 5 PLY APA RATED PLYWOOD SHEATHING
- FASTENED WITH #8 X 1" LONG RIBBED BUGLE HEAD SCREWS, AT 6" O.C. AROUND THE PERIMETER AND 12" O.C. WITHIN THE FIELD

CLADDING

- PLANKS OVERLAP 1-¼"
- THE EXPOSURE IS 7"
- THE PLANKS ARE BLIND SCREWED WITH NO. 8-18, 0.375" HEAD DIAMETER X 1-¾" LONG CORROSION RESISTANT BUGLE HEAD SCREWS (SCREW SHALL HAVE AT LEAST 3 FULL THREADS PENETRATING THE METAL FRAMING), PLACE SCREWS 1" DOWN FROM THE TOP EDGE OF THE PLANK AT EACH STUD LOCATION
- THE PLANKS ARE FACE NAILED WITH 0.075" SHANK DIAMETER X 2" LONG CORROSION RESISTANT METAL STUD FINISH NAILS, PLACE FINISH NAILS ¾" UP FROM THE BOTTOM EDGE OF THE PLANK AT EACH STUD LOCATION

FOR METAL AND WOOD STUDS, PROVISIONS FOR DIAPHRAGM ACTION AND GRAVITY LOAD ARE NOT PART OF THIS APPROVAL (MUST PROVIDE ALTERNATE PROVISIONS FOR THESE LOADS)

REVISED
as complying with the Florida Building Code
Acceptance No 20-0730.07
Expiration Date 10/02/2023
By Helg A. Martin
Miami Dade Product Control

Y. ANDREW TAN
LICENSE
No 81562
STATE OF FLORIDA
PROFESSIONAL ENGINEER

JamesHardie

Artisan® Lap Siding (Metal Studs)

This drawing and the copyright therein are the property of the named company and accordingly the drawing must not be copied or reproduced in any material form whatsoever and must be returned with quotation and on completion of job

James Hardie Building Products, Inc.
10901 Elm Avenue
Fontana, CA 92337
Phone: 909-356-6300, Fax 909-427-0634

Creator: C. Diercks

SIZE	FSCM NO	DWG NO	REV
A		Miami Dade NOA - Artisan Lap Siding- 2008-8-7.vsd	1

SCALE	1" = 1'-0"	Date: 8/7/2008	SHEET	2 OF 4

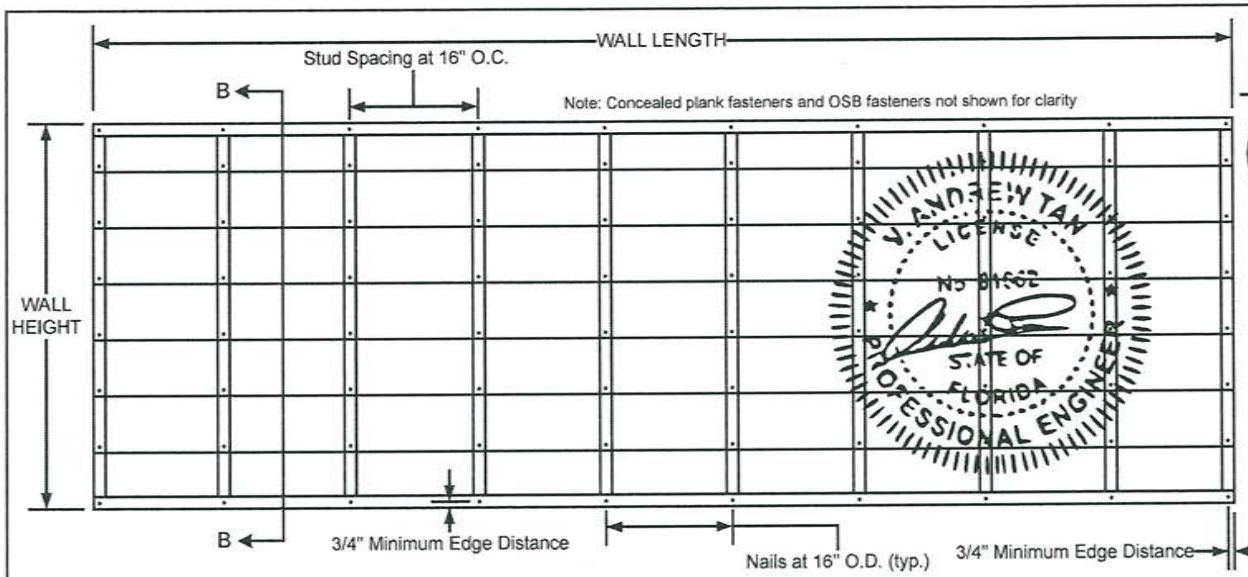

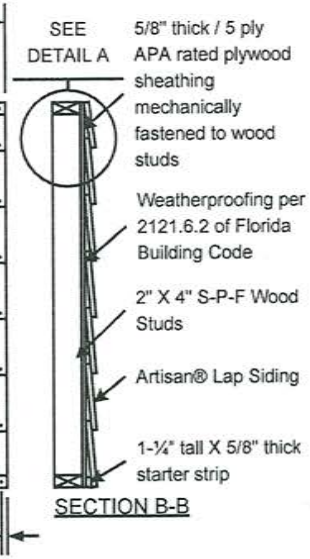

PRODUCT DESCRIPTION

Artisan® Lap Siding material is a nonasbestos fiber-cement product tested in accordance with ASTM C1186 Grade II, Type A and meeting the requirements of the Florida Building Code.

PLANK DIMENSIONS

Width	Length	Thickness
≤ 8-¼"	12'	5/8"

DESIGN PRESSURE RATING

Installation	Design Pressure
Wood Studs	-92 psf

Impact Resistant –
Planks installed over 5/8" thick / 5 ply APA rated plywood sheathing

DETAIL A

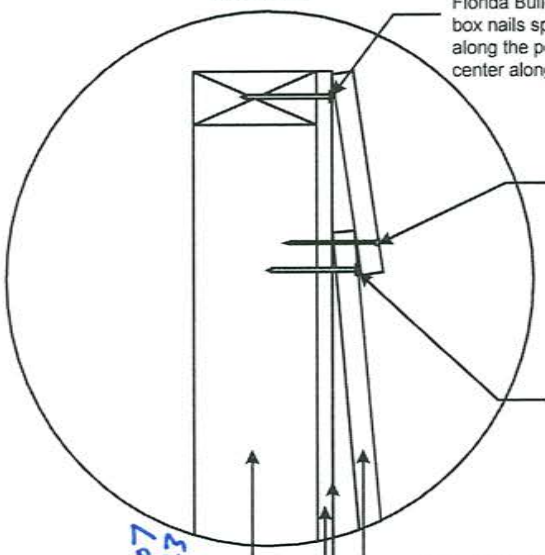

5/8" thick / 5 ply APA rated plywood sheathing shall be attached to the studs in accordance with the Florida Building Code, with minimum 8d 2-3/8" long box nails spaced a maximum of 6 inches on center along the perimeter and a maximum of 12 inches on center along the intermediate supports.

The exposed fastener shall be an 8d, 2-½" long corrosion resistant finish nail over wood studs.
The exposed fastener shall be placed in the overlapping area approximately ¾" from the bottom edge of the overlapping plank.

The concealed fastener shall be an 8d, 2-3/8" long corrosion resistant ring shank box nail over wood studs.
The concealed fastener shall be fastened through the top edge of a single plank; the concealed fastener shall be positioned 1" down from the plank's top edge in such a way that the fastener is fully concealed by the next course of plank.

Artisan® Lap Siding

Weather-resistive barrier per Section 1404.2 of the Florida Building Code

5/8" thick / 5 ply APA rated plywood sheathing fastened according to the Florida Building Code

2" X 4" S-P-F Wood Studs

ARTISAN® LAP SIDING INSTALLATION DETAILS

- All installation shall be done in conformance with this Notice of Acceptance, the manufacturer's installation recommendations, and the applicable sections of the Florida Building Code.
- Wood studs where Artisan® Lap Siding will be installed shall be designed by an Engineer or Architect per the Florida Building Code and the requirements of this N.O.A.
- Planks shall be applied horizontally commencing from the bottom course of the wall with 1-¼" wide laps at the top of the plank.
- The tongue and groove vertical joints must occur 4" off stud, do not nail within 2 inches of tongue and groove.
- The planks shall be installed over 5/8" thick / 5 ply APA rated plywood sheathing supported by a minimum of 2"X4" S-P-F wood studs spaced a maximum of 16" O.C.
- The siding shall be fastened over the studs with a combination of both concealed and exposed fasteners.
- The concealed fastener shall be an 8d, 2-3/8" long corrosion resistant ring shank box nail over wood studs.
- The exposed fastener shall be an 8d, 2-½" long corrosion resistant finish nail over wood studs.
- The concealed fastener shall be fastened through the top edge of a single plank; the concealed fastener shall be positioned 1" down from the plank's top edge in such a way that the fastener is fully concealed by the next course of plank.
- The exposed fastener shall be placed in the overlapping area approximately ¾" from the bottom edge of the overlapping plank.
- Both concealed and exposed fasteners shall be ≤ 7" O.C. vertically and 16" O.C. horizontally into wood studs through 5/8" thick / 5 ply APA rated plywood sheathing.
- A fastener edge distance of ¾" shall always be observed.
- 5/8" thick / 5 ply APA rated plywood sheathing shall be attached to the studs in accordance with the Florida Building Code, with minimum 8d 2-3/8" long box nails spaced a maximum of 6 inches on center along the perimeter and a maximum of 12 inches on center along the intermediate supports.

PRODUCT REVISED as complying with the Florida Building Code Acceptance No 20-0730.07 Expiration Date 10/02/2023 By Miami Dade Product Control

JamesHardie

James Hardie Building Products, Inc.
10901 Elm Avenue
Fontana, CA 92337
Phone: 909-356-6300, Fax 909-427-0634

Creator: C. Diercks

Artisan® Lap Siding (Wood Studs)

This drawing and the copyright therein are the property of the named company and accordingly the drawing must not be copied or reproduced in any material form whatsoever and must be returned with quotation and on completion of job

SIZE	FSCM NO	DWG NO	REV
A		Miami Dade NOA - Artisan Lap Siding- 2008-8-7.vsd	1

SCALE	1/2" = 1'-0"	Date: 8/7/2008	SHEET	3 OF 4

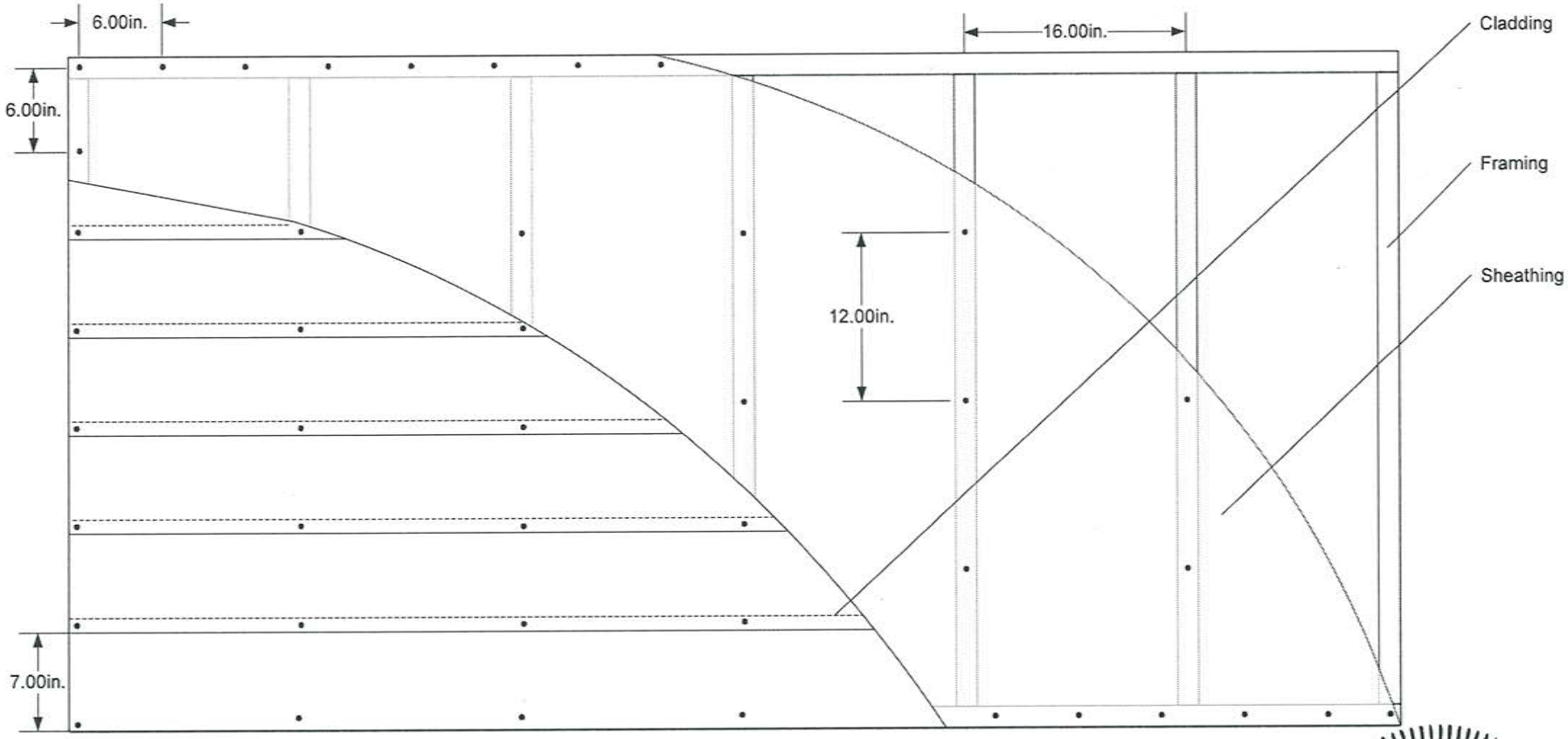

PRODUCT REVISED
as complying with the Florida
Building Code
Acceptance No 20-0730.07
Expiration Date 10/02/2023
By Miami Dade Product Control

V. ANDREW TAN
LICENSE
No 81562
STATE OF
FLORIDA
PROFESSIONAL ENGINEER

FRAMING

- NOMINAL 2" X 4" S-P-F WOOD STUDS 16" O.C. FASTENED WITH 16d COMMON NAILS (2 PER TOP AND BOTTOM CONNECTION)

SHEATHING

- NOMINAL 5/8" THICK / 5 PLY APA RATED PLYWOOD SHEATHING
- FASTENED WITH 2-3/8 INCH 8d COMMON NAILS, AT 6" O.C. AROUND THE PERIMETER AND 12" O.C. WITHIN THE FIELD

CLADDING

- PLANKS OVERLAP 1-¼"
- THE EXPOSURE IS 7"
- THE PLANKS ARE BLIND NAILED WITH A 2-3/8" CORROSION RESISTANT COMMON RING SHANK NAILS, 1" DOWN FROM THE TOP EDGE OF THE PLANK AT EACH STUD LOCATION
- THE PLANKS ARE FACE NAILED WITH 2-½" CORROSION RESISTANT FINISH NAILS, ¾" UP FROM THE BOTTOM EDGE OF THE PLANK AT EACH STUD LOCATION

FOR METAL AND WOOD STUDS, PROVISIONS FOR DIAPHRAGM ACTION AND GRAVITY LOAD ARE NOT PART OF THIS APPROVAL (MUST PROVIDE ALTERNATE PROVISIONS FOR THESE LOADS)

JamesHardie

James Hardie Building Products, Inc.
10901 Elm Avenue
Fontana, CA 92337
Phone: 909-356-6300, Fax 909-427-0634

Creator: C. Diercks

Artisan® Lap Siding (Wood Studs)

This drawing and the copyright therein are the property of the named company and accordingly the drawing must not be copied or reproduced in any material form whatsoever and must be returned with quotation and on completion of job

SIZE	FSCM NO	DWG NO	REV
A		Miami Dade NOA - Artisan Lap Siding- 2008-8-7.vsd	1

SCALE	1" = 1'-0"	Date: 8/7/2008	SHEET	4 OF 4