MIAMI-DADE COUNTY
PRODUCT CONTROL SECTION
11805 SW 26 Street, Room 208
Miami, Florida 33175-2474
T (786) 315-2590 F (786) 315-2599
www.miamidade.gov/economy

DEPARTMENT OF REGULATORY AND ECONOMIC RESOURCES (RER)
BOARD AND CODE ADMINISTRATION DIVISION

NOTICE OF ACCEPTANCE (NOA)

Daybar Industries Limited
50 West Drive
Brampton, Ontario, Canada L6T2J4

SCOPE:

This NOA is being issued under the applicable rules and regulations governing the use of construction materials. The documentation submitted has been reviewed and accepted by Miami-Dade County RER -Product Control Section to be used in Miami Dade County and other areas where allowed by the Authority Having Jurisdiction (AHJ).
This NOA shall not be valid after the expiration date stated below. The Miami-Dade County Product Control Section (In Miami Dade County) and/or the AHJ (in areas other than Miami Dade County) reserve the right to have this product or material tested for quality assurance purposes. If this product or material fails to perform in the accepted manner, the manufacturer will incur the expense of such testing and the AHJ may immediately revoke, modify, or suspend the use of such product or material within their jurisdiction. RER reserves the right to revoke this acceptance, if it is determined by Miami-Dade County Product Control Section that this product or material fails to meet the requirements of the applicable building code.
This product is approved as described herein and has been designed to comply with the Florida Building Code, including the High Velocity Hurricane Zone.

DESCRIPTION: Series "LS-20GA" Inswing Single Commercial Steel (Galvanneal or Stainless Steel) Doors w/ 18ga Frames -LM Impact

APPROVAL DOCUMENT: Drawing No **20-145** (Former **17-084)**, titled "Single LS20GA Flush Commercial Steel Inswing Door w/ 18 ga Steel frames", sheets 1 through thru 13 of 13 prepared by Tilteco Inc, dated 07/06/20, signed and sealed by Walter A. Tillit Jr., P. E., bearing the Miami-Dade County Product Control revision stamp with the Notice of Acceptance number and expiration date by the Miami-Dade County Product Control Section.

MISSILE IMPACT RATING: Large and Small Missile Impact Resistant

Limitations:

1. See Design Pressure Ratings in sheets **2.** See Jambs anchor OC spacing for **case 1** or **2** in sheet **3** and installation details on sheet **12** for each case.
2. Min required Steel tensile yield=45 ksi and tensile ultimate Fu= 50.5 ksi and for Stainless Steel tensile yield=54.5 ksi and tensile ultimate Fu= 94.4 ksi for doors and/or frames.

LABELING: Each unit shall bear a permanent label with the manufacturer's name or logo, Brampton, Ontario and series and following statement: "Miami-Dade County Product Control Approved", noted herein.

RENEWAL of this NOA shall be considered after a renewal application has been filed and there has been no change in the applicable building code negatively affecting the performance of this product.

TERMINATION of this NOA will occur after the expiration date or if there has been a revision or change in the materials, use, and/or manufacture of the product or process. Misuse of this NOA as an endorsement of any product, for sales, advertising or any other purposes shall automatically terminate this NOA. Failure to comply with any section of this NOA shall be cause for termination and removal of NOA.

ADVERTISEMENT: The NOA number preceded by the words Miami-Dade County, Florida, and followed by the expiration date may be displayed in advertising literature. If any portion of the NOA is displayed, then it shall be done in its entirety.

INSPECTION: A copy of this entire NOA shall be provided to the user by the manufacturer or its distributors and shall be available for inspection at the job site at the request of the Building Official.
This NOA **revises** NOA# **17-0829.10** and consists of this page 1 and evidence pages E-1, E-2 & E-3, as well as approval document mentioned above.
The submitted documentation was reviewed by **Ishaq I. Chanda, P.E.**

MIAMI-DADE COUNTY APPROVED

Ishaq I. Chanda

NOA No. 20-0813.13
Expiration Date: January 19, 2022
Approval Date: December 31, 2020

Daybar Industries Limited

NOTICE OF ACCEPTANCE: EVIDENCE SUBMITTED

1. Evidence submitted under previous approvals

A. DRAWINGS

1. Manufacturer's parts and sections drawings.
2. Drawing No **15-263**, titled "Single LS20GA Flush Commercial Steel Inswing Door w/ 18 ga Steel frames", sheets 1 through thru 13 of 13 prepared by Tilteco Inc, dated 12/21/16, signed and sealed by Walter A. Tillit Jr., P.E.

B. TESTS (submitted under file #**16-1018.07**)

1. Test reports on 1) Air Infiltration Test, per FBC, TAS 202-94
   2) Uniform Static Air Pressure Test, Loading per FBC, TAS 202-94
   3) Water Resistant Test, per FBC, TAS 202-94
   4) Large Missile Impact Test per FBC, TAS 201-94
   5) Cyclic Wind Pressure Loading per FBC, TAS 203-94
   6) Forced Entry Test, per FBC 2411.3.2.1 (b) and TAS 202-94

Along with marked-up drawings and installation diagram of Single inswing steel doors, prepared by Fenestration Testing Laboratory, Inc., Test Report No. **FTL8974** dated 10/03/16, signed and sealed by Idamis Ortega, P.E.
(Note: This test report has been revised by an addendum dated 12/17/16 has been issued by test lab)

C. CALCULATIONS

1. Anchor Verification Calculations, complying w/ FBC-2014, dated 10-10-16, prepared by Tilteco, Inc., signed and sealed by Walter A. Tillit Jr., P. E.

D. QUALITY ASSURANCE

1. Miami Dade Department of Regulatory and Economic Resources (RER).

E. MATERIAL CERTIFICATIONS

1. Tensile Test per ASTME370-14, test report No. **FTL 9135**, dated 08/16/16, issued by Fenestration Testing Laboratory, signed and sealed by Idamis Ortega, P.E.
2. Notice of Acceptance No. **11-0920.07** issued to Dyplast Product, LLC (Former Apache Products Company) for "EPS-Expanded Polystyrene Insulation", expiring on 01/11/17.

F. STATEMENTS

1. Statement letter of compliance to FBC-2014 and "No financial interest", dated 10/11/16, issued by Tilteco Inc., signed and sealed by Walter A. Tillit Jr., P. E.

G. OTHER

1. Test proposal#15-2115 approved by RER dated 01/20/16.
2. Manufacturer/Distributor agreement dated 09/21/16 between Daybar Industries Limited, Canada and Daybar Southeast Manufacturing, N. Key Largo, USA, signed by Mark Dodson and David Ball, respective officials of the companies.

Ishaq I. Chanda

Ishaq I. Chanda, P.E.
Product Control Unit Supervisor
NOA No. 20-0813.13
Expiration Date: January 19, 2022
Approval Date: December 31, 2020

NOTICE OF ACCEPTANCE: EVIDENCE SUBMITTED

2. Evidence submitted under previous approval

A. DRAWINGS

1. Drawing No **17-084** (Former **15-263)**, titled "Single LS20GA Flush Commercial Steel Inswing Door w/ 18 ga Steel frames", sheets 1 through thru 13 of 13 prepared by Tilteco Inc, dated 0720/17 prepared by Tilteco Inc, signed and sealed by Walter A. Tillit Jr., P.E.
   Note: This revision consists of general notes#1, 4, 5, 14 and 15 changes, in compliance of FBC 2017 edition.

B. TESTS

1. None

C. CALCULATIONS

1. None

D. QUALITY ASSURANCE

1. Miami Dade Department of Regulatory and Economic Resources (RER).

E. MATERIAL CERTIFICATIONS

1. Notice of Acceptance No. **16-1129.05** issued to Dyplast Product, LLC (Former Apache Products Company) for "E and R Board Expanded Polystyrene Rigid Foam Insulation", expiring on 01/11/22.

F. STATEMENTS

1. Statement letters of conformance to FBC 2017(**6th** Edition), prepared by Tilteco Inc., dated 07/17/17, signed & sealed by Walter A. Tillit Jr., P. E.
2. Statement letter of general notes revision only, in compliance with FBC 2017 edition, prepared by Tilteco Inc., dated 07/17/17, signed & sealed by Walter A. Tillit Jr., P. E.

G. OTHER

1. This NOA **revises NOA # 16-1018.07**, expiring 01/19/22.

3. New Evidence submitted

A. DRAWINGS

1. Drawing No. **20-145** (Former **17-084)**, titled "Single LS20GA Flush Commercial Steel Inswing Door w/ 18 ga Steel frames", sheets 1 through thru 13 of 13 prepared by Tilteco Inc, dated 07/06/20, prepared by Tilteco Inc, signed and sealed by Walter A. Tillit Jr., P.E.
   Note: This revision consists of compliance of FBC 2020 notes.

Ishaq I. Chanda

Ishaq I. Chanda, P.E.
Product Control Unit Supervisor
NOA No. 20-0813.13
Expiration Date: January 19, 2022
Approval Date: December 31, 2020

NOTICE OF ACCEPTANCE: EVIDENCE SUBMITTED

B. TESTS

1. None

C. CALCULATIONS

1. None

D. QUALITY ASSURANCE

1. Miami Dade Department of Regulatory and Economic Resources (RER).

E. MATERIAL CERTIFICATIONS

1. Notice of Acceptance No. **16-1129.05** issued to Dyplast Product, LLC (Former Apache Products Company) for "E and R Board Expanded Polystyrene Rigid Foam Insulation", expiring on 01/11/22.

F. STATEMENTS

1. Statement letters of conformance to FBC 2020 (**7th** Edition), prepared by Tilteco Inc., dated 07/06/20, signed & sealed by Walter A. Tillit Jr., P. E.

G. OTHER

1. This NOA **revises NOA # 17-0829.10**, expiring 01/19/22.

Ishaq I. Chanda

Ishaq I. Chanda, P.E.
Product Control Unit Supervisor
NOA No. 20-0813.13
Expiration Date: January 19, 2022
Approval Date: December 31, 2020

GENERAL NOTES AND SPECIFICATIONS:

1. SERIES LS20GA FLUSH COMMERCIAL STEEL INSWING DOOR SHOWN ON THIS PRODUCT APPROVAL DOCUMENT (P.A.D.) HAS BEEN VERIFIED FOR CODE COMPLIANCE IN ACCORDANCE WITH THE **2020 (7th EDITION)** AND **2017 (6th EDITION)** OF THE FLORIDA BUILDING CODE. DOOR MAY BE INSTALLED AT HIGH VELOCITY HURRICANE ZONES.

DESIGN WIND LOADS SHALL BE DETERMINED AS PER SECTION **1620** OF THE ABOVE MENTIONED CODE, USING **ASCE 7-16 (FBC 2020)** AND **ASCE 7-10 (FBC 2017)** SHALL NOT EXCEED THE MAXIMUM (A.S.D.) DESIGN PRESSURE RATINGS INDICATED ON SHEET 2.

IN ORDER TO VERIFY THE ABOVE CONDITION, ULTIMATE DESIGN WIND LOADS DETERMINED PER **ASCE 7-16** & **ASCE 7-10** SHALL BE FIRST REDUCED TO A.S.D. DESIGN WIND LOADS BY MULTIPLYING THEM BY 0.6 IN ORDER TO COMPARE THESE W/ MAX. (A.S.D.) DESIGN PRESSURE RATINGS INDICATED ON SHEET 2.

THIS DOOR'S ADEQUACY FOR WIND AND IMPACT LOAD HAS BEEN VERIFIED IN ACCORDANCE WITH SECTION **1626** OF THE ABOVE MENTIONED CODE AS PER PROTOCOLS TAS-201, TAS-202, TAS-203 AS PER FENESTRATION TESTING LABORATORY, INC. REPORT # 8974, AND AS PER SUBMITTED STRUCTURAL CALCULATIONS, PERFORMED AS PER SECTION **1616** OF THE FLORIDA BUILDING CODE.

2. ALL COMPONENTS SHALL BE AS SPECIFIED ON APPLICABLE DETAIL SHEETS AND AT BILL OF MATERIALS (SHEET 5) OF THIS DRAWING.

3. COMPLIANCE OF EGRESS / ESCAPE REQUIREMENTS OF THESE DOORS PER FLORIDA BUILDING CODE TO BE DETERMINED BY BUILDING OFFICIALS ON A CASE-BY-CASE BASIS.

4. ALL SCREWS USED FOR ASSEMBLY CONNECTIONS (METAL TO METAL) TO BE STAINLESS STEEL 304 OR 316 AISI SERIES OR CORROSION RESISTANT COATED CARBON STEEL AS PER DIN 50018 WITH 50 ksi YIELD POINT AND 90 ksi TENSILE STRENGTH & SHALL COMPLY W/ FLORIDA BUILDING CODE SECTION **2411.3.3.4**.

5. ALL WELDING TO CONFORM W/AMERICAN WELDING SOCIETY A.W.S. D.1.3 AND D-19.0 REGULATIONS WITH E60XX ELECTRODES, FOR GALVANNEAL MATERIAL, AND W/AMERICAN WELDING SOCIETY A.W.S. D.1.6 REGULATIONS W/ E-308 ELECTRODES (FU=80k.s.i.) FOR STAINLESS STEEL MATERIAL

6. ALL ANCHORS FOR DOOR FRAME CONNECTIONS TO EXISTING STRUCTURE SHALL BE AS SPECIFIED ON SHEET 13 OF THIS DRAWING.
MAXIMUM ANCHORS SPACINGS SHALL BE AS PER ELEVATIONS ON SHEET 3 OF THIS DRAWING.

7. PROVIDE MAX. LOAD BEARING SHIM SPACE AS INDICATED ON SHEET 12.

8. THIS DOOR WILL NOT REQUIRE A HURRICANE PROTECTION DEVICE.

9. THESE DOOR ASSEMBLIES ARE APPROVED FOR WATER AND AIR INFILTRATION AS PER TESTING INDICATED ON GENERAL NOTE 1, AND SHALL BE LIMITED TO DESIGN PRESSURE RATINGS INDICATED ON SHEET 2.

10. PROVIDE SPECIFIED SEALANT AT ALL DOOR FRAME & THRESHOLD COMPONENTS INDICATED ON THIS DRAWING.

11. ALL EXISTING WALLS (STRUCTURE) WHERE DOOR IS TO BE INSTALLED MUST BE BUILT IN ACCORDANCE WITH THE FLORIDA BUILDING CODE AND SHALL BE DESIGNED TO SUSTAIN THE SUPERIMPOSED LOADS TRANSFERRED BY THE DOOR SYSTEM.

12. PERMIT HOLDER SHALL VERIFY THE ADEQUACY OF THE EXISTING STRUCTURE TO SUSTAIN THE SUPERIMPOSED LOADS TRANSFERRED BY THESE DOORS.

13. (a) THIS PRODUCT APPROVAL DOCUMENT (P.A.D.) PREPARED BY THIS ENGINEER IS GENERIC AND DOES NOT PROVIDE INFORMATION FOR A SITE SPECIFIC PROJECT; i.e. WHERE THE SITE CONDITIONS DEVIATE FROM THE P.A.D.

(b) CONTRACTOR TO BE RESPONSIBLE FOR THE SELECTION, PURCHASE AND INSTALLATION INCLUDING LIFE SAFETY OF THIS PRODUCT, BASED ON THIS P.A.D., PROVIDED HE/SHE DOES NOT DEVIATE FROM THE CONDITIONS DETAILED ON THIS DOCUMENT. CONSTRUCTION SAFETY AT SITE IS THE CONTRACTOR'S RESPONSIBILITY.

(c) THIS PRODUCT APPROVAL DOCUMENT (P.A.D.) WILL BE CONSIDERED INVALID IF ALTERED BY ANY MEANS.

(d) ORIGINAL P.A.D SHALL BEAR THE DATE, SEAL AND SIGNATURE OF THE PROFESSIONAL ENGINEER OF RECORD THAT PREPARED IT.

14. PRODUCT MANUFACTURER'S LABEL SHALL BE LOCATED ON A READILY VISIBLE LOCATION AT PRODUCT IN ACCORDANCE WITH SECTION **1709.5** OF THE FLORIDA BUILDING CODE.
ONE LABEL SHALL BE PLACED FOR EVERY OPENING.

15. EXPANDED POLYSTYRENE CORE SHALL BE RIGID BOARD TYPE 1 PCF CONFORMING TO ASTM C578 BY DYPLAST PRODUCTS LLC, W/ CURRENT MIAMI DADE COUNTY PRODUCT CONTROL APPROVAL (NOA).

SHEETS CONTENT:

SHEET #1	INDEX, COVER SHEET & GENERAL NOTES.
SHEET #2	ASSEMBLY ELEVATIONS.
SHEET #3	ANCHOR ELEVATIONS.
SHEET #4	OPTIONAL EMBOSSED DOOR SLAB.
SHEET #5	BILL OF MATERIALS.
SHEETS #6-#8	COMPONENTS.
SHEET #9	VERTICAL SECTIONS.
SHEETS #10-11	HORIZONTAL SECTIONS AT HARDWARE.
SHEET #12	ANCHOR SECTIONS.
SHEET #13	DOOR SURFACE CLOSER REINFORCEMENT AND END CHANNEL ASSEMBLY DETAIL + CORNER DETAILS.

PRODUCT REVISED
as complying with the Florida Building Code
NOA-No. 20-0813.13
Expiration Date 01/19/2022
By Ishaq I. Chanda
Miami-Dade Product Control

THIS DRAWING SHALL ONLY BE USED TO OBTAIN PERMITS IN THE STATE OF FLORIDA

WALTER A. TILLIT JR. LICENSE No. 44167 STATE OF FLORIDA PROFESSIONAL ENGINEER

7/6/2020

FLORIDA BUILDING CODE (HIGH VELOCITY HURRICANE ZONE)

©2020 TILTECO, INC.

TILTECO INC.
TILLIT TESTING & ENGINEERING COMPANY
6355N.W. 36th. St., Ste. 305, VIRGINIA GARDENS, Fl. 33166
Phone : (305)871-1530 . Fax : (305)871-1531
e-mail: tilteco@aol.com
CA-0006719
WALTER A. TILLIT Jr. P.E.
FLORIDA Lic. # 44167

SERIES LS20GA FLUSH COMMERCIAL STEEL INSWING DOOR W/SERIES "AS" 18GA STEEL FRAME

DAYBAR INDUSTRIES LTD
50 WEST DRIVE, BRAMPTON, ON CANADA, L6T 2J4
TEL: 905 625-8000
FAX: 905 625-4204

REV. No	DESCRIPTION	DATE	REV. No	DESCRIPTION	DATE
1	OLD 17-084	06/29/2020	3		
2			4		

DRAWN BY: M.P
06/29/2020 DATE
20-145 DRAWING No
SHEET 1 OF 13

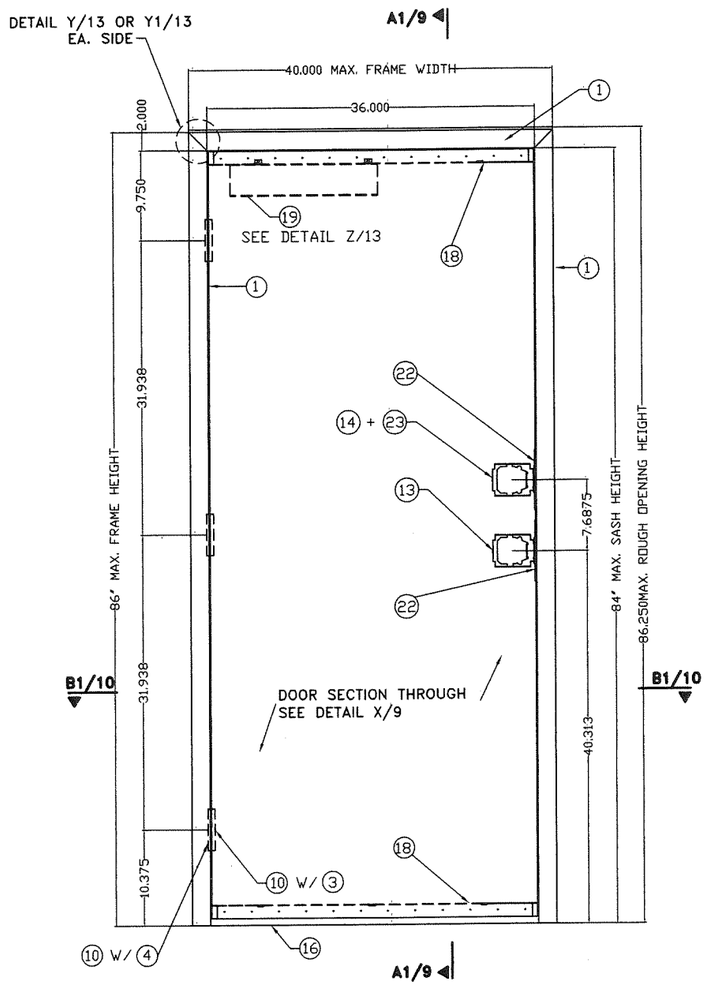

EXTERIOR ELEVATION (INSWING) DOOR
CYLINDRICAL LOCK + DEAD BOLT

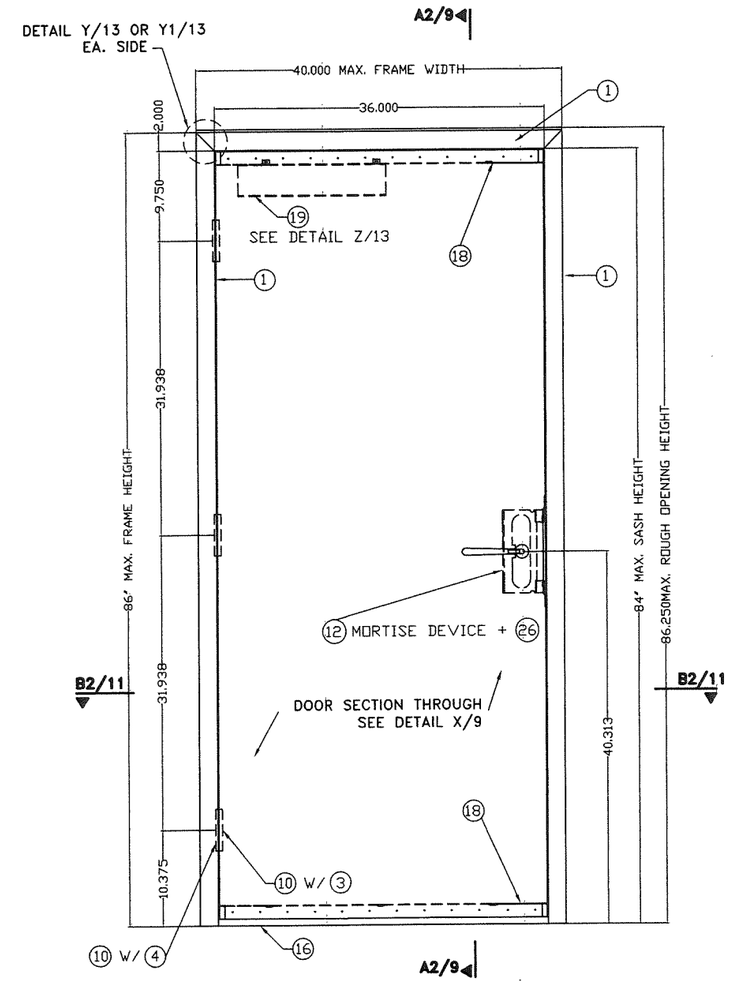

EXTERIOR ELEVATION (INSWING) DOOR
MORTISE DEVICE

PRODUCT REVISED
as complying with the Florida Building Code
NOA-No. 20-0813.13
Expiration Date 01/19/2022
By Ishwar I. Chanda
Miami-Dade Product Control

A.S.D. DESIGN LOAD
+65.0 psf, −65.0 psf

WALTER A. TILLIT JR.
LICENSE
No. 44167
STATE OF
FLORIDA
PROFESSIONAL ENGINEER

7/6/20

FLORIDA BUILDING CODE (HIGH VELOCITY HURRICANE ZONE)

©2020 TILTECO, INC.

TILTECO INC.
TILLIT TESTING & ENGINEERING COMPANY
6355N.W. 36th. St., Ste. 305, VIRGINIA GARDENS, FL 33166
Phone : (305)871-1530 . Fax : (305)871-1531
e-mail: tilteco@aol.com
CA-0006719
WALTER A. TILLIT Jr. P.E.
FLORIDA Lic. # 44167

SERIES LS20GA FLUSH COMMERCIAL
STEEL INSWING DOOR W/SERIES "AS"
18GA STEEL FRAME

DAYBAR INDUSTRIES LTD
50 WEST DRIVE, BRAMPTON,
ON CANADA, L6T 2J4
TEL: 905 625-8000
FAX: 905 625-4204

REV. No	DESCRIPTION	DATE	REV. No	DESCRIPTION	DATE
1	OLD 17-084.	06/29/2020	3		
2			4		

DRAWN BY: M.P
06/29/2020
DATE
20-145
DRAWING No
SHEET 2 OF 13

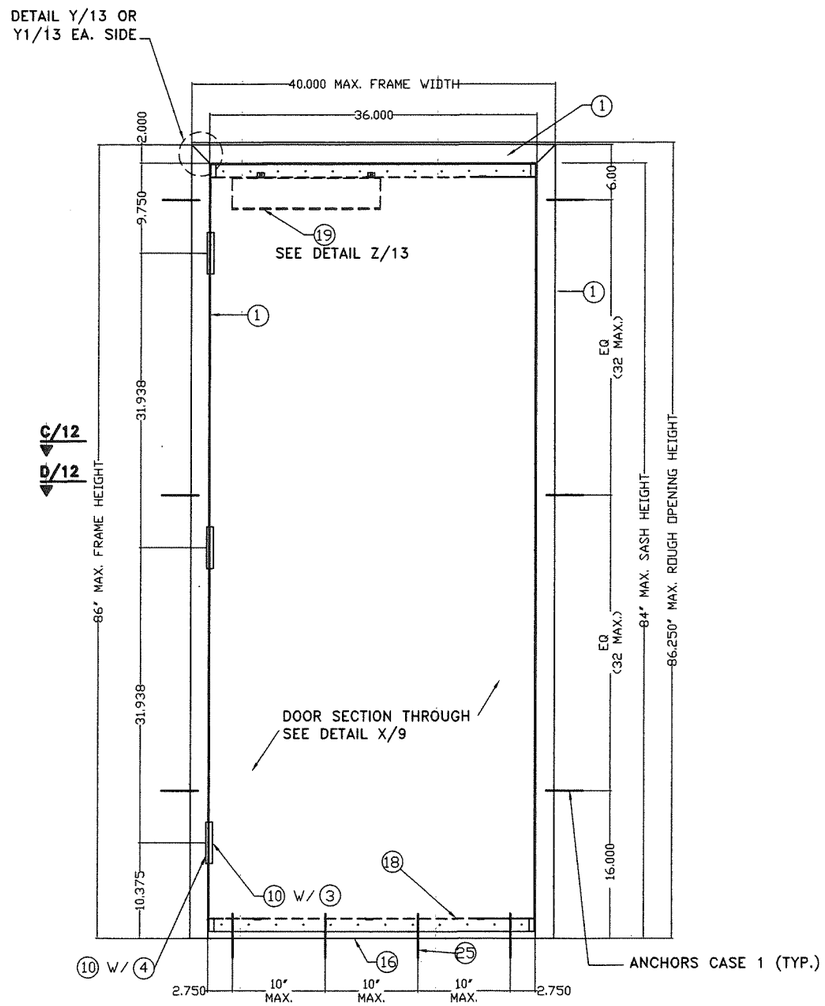

EXTERIOR ELEVATION (OUTSWING) DOOR

CASE 1 (SEE SHEET 12)

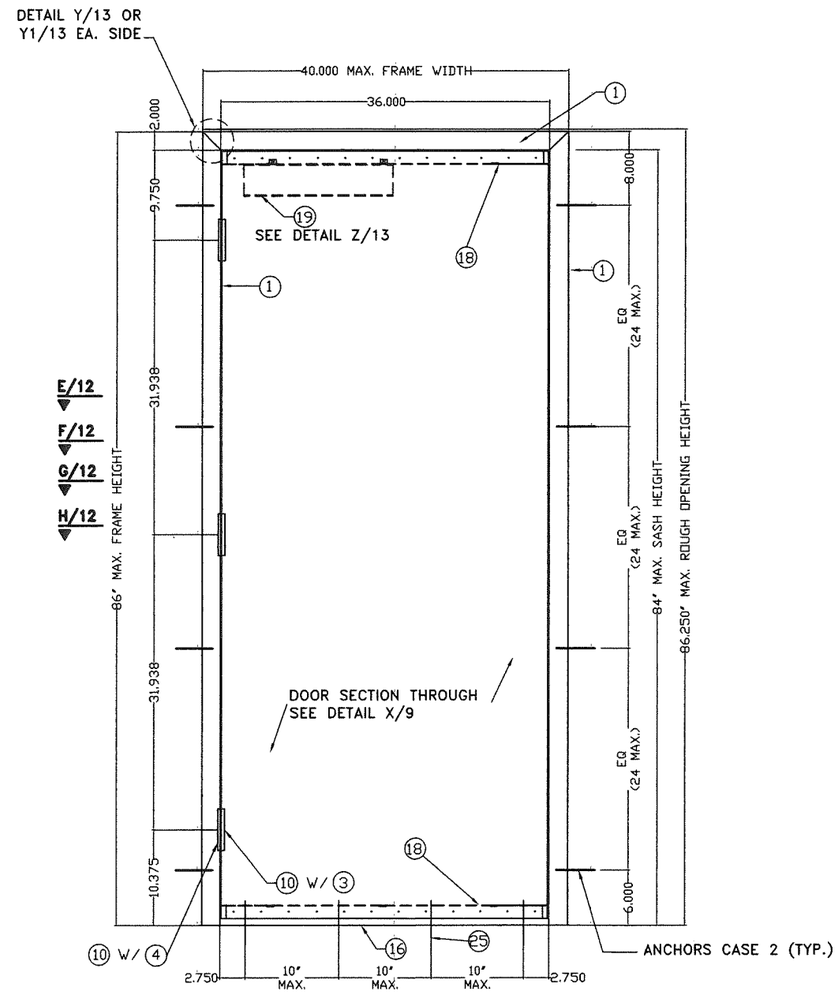

EXTERIOR ELEVATION (OUTSWING) DOOR

CASE 2 (SEE SHEET 12)

PRODUCT REVISED
as complying with the Florida Building Code
NOA-No. 20-0813.13
Expiration Date 01/19/2022
By Ishwar I. Chanda
Miami-Dade Product Control

ANCHORAGE INSTALLATION DETAILS AT JAMBS

WALTER A. TILLIT JR.
LICENSE
No. 44167
STATE OF FLORIDA
PROFESSIONAL ENGINEER
7/6/

FLORIDA BUILDING CODE (HIGH VELOCITY HURRICANE ZONE)

©2020 TILTECO, INC.

TILTECO INC.
TILLIT TESTING & ENGINEERING COMPANY
6355N.W. 36th. St., Ste. 305, VIRGINIA GARDENS, Fl. 33166
Phone : (305)871-1530 . Fax : (305)871-1531
e-mail: tilteco@aol.com
CA-0006719
WALTER A. TILLIT Jr. P.E.
FLORIDA Lic. # 44167

SERIES LS20GA FLUSH COMMERCIAL STEEL INSWING DOOR W/SERIES "AS" 18GA STEEL FRAME

DAYBAR INDUSTRIES LTD
50 WEST DRIVE, BRAMPTON, ON CANADA, L6T 2J4
TEL: 905 625-8000
FAX: 905 625-4204

REV. No	DESCRIPTION	DATE	REV. No	DESCRIPTION	DATE
1	OLD 17-084	06/29/2020	3		
2			4		

DRAWN BY: M.P

06/29/2020 DATE

20-145 DRAWING No

SHEET 3 OF 13

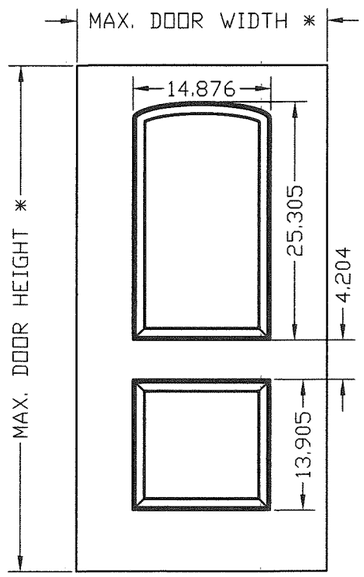

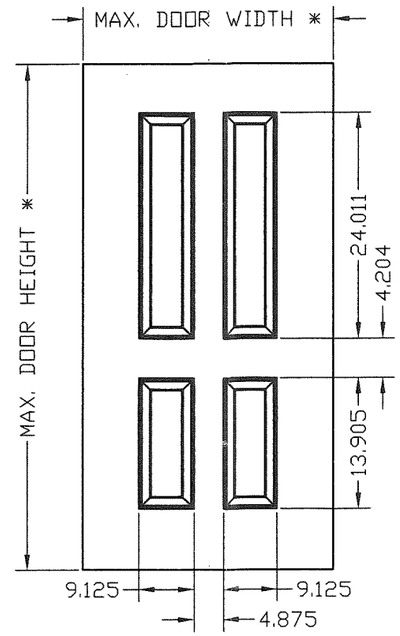

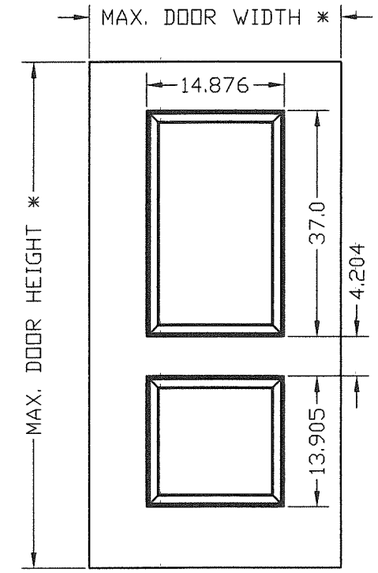

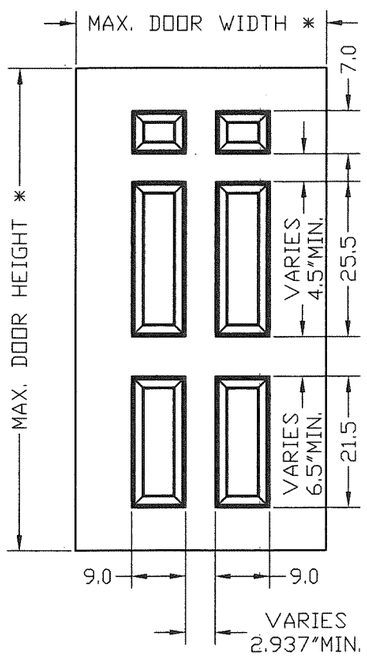

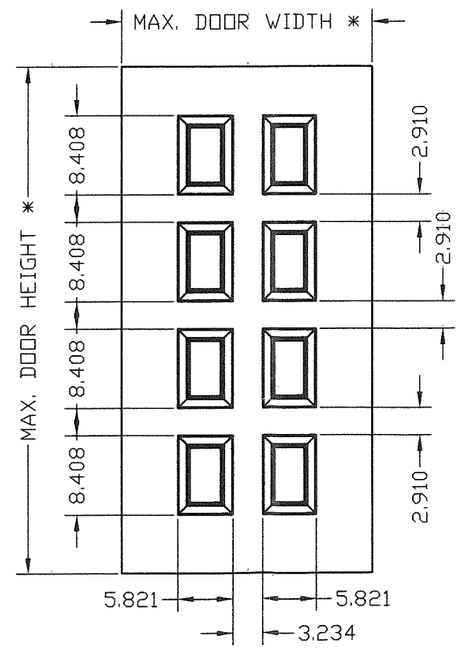

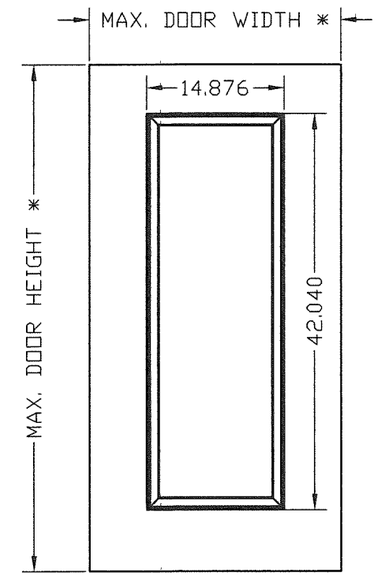

WALTER A. TILLIT JR.
LICENSE
No. 44167
STATE OF FLORIDA
PROFESSIONAL ENGINEER

7/8/2020

* SEE SHEET 2

PRODUCT REVISED
as complying with the Florida Building Code
NOA-No. 20-0813.13
Expiration Date 01/19/2022
By Ishaq I. Chanda
Miami-Dade Product Control

FLORIDA BUILDING CODE (HIGH VELOCITY HURRICANE ZONE)

OPTIONAL EMBOSSED DOOR ELEVATIONS

©2020 TILTECO, INC.

TILTECO INC.
TILLIT TESTING & ENGINEERING COMPANY
6355N.W. 36th. St., Ste. 305, VIRGINIA GARDENS, Fl. 33166
Phone : (305)871-1530 . Fax : (305)871-1531
e-mail: tilteco@aol.com
CA-0006719
WALTER A. TILLIT Jr. P.E.
FLORIDA Lic. # 44167

SERIES LS20GA FLUSH COMMERCIAL STEEL INSWING DOOR W/SERIES "AS" 18GA STEEL FRAME

DAYBAR INDUSTRIES LTD
50 WEST DRIVE, BRAMPTON, ON CANADA, L6T 2J4
TEL: 905 625-8000
FAX: 905 625-4204

REV. No	DESCRIPTION	DATE	REV. No	DESCRIPTION	DATE
1	OLD 17-084	06/29/2020	3		
2			4		

DRAWN BY: M.P
06/29/2020 DATE
20-145 DRAWING No
SHEET 4 OF 13

BILL OF MATERIALS INSWING DOOR:

ITEM	DESCRIPTION	BASIC DIMENSIONS, MATERIAL OR ADDITIONAL DETAILS
1, 1A	18 GAUGE WELDED FRAME	AS 5 3/4" JAMB DEPTH X 2" FACE X .042" MIN GALVANNEAL FOR 1 (Fu=52Ksi, Fy=45Ksi) OR STAINLESS STEEL (Fu=94.9 Ksi, Fy=54.5 Ksi) FOR 1A , OF SAME DIMENSION
2	20 GAUGE FLUSH DOOR COMMERCIAL STEEL	1 3/4" THICK X (.032 MIN) GALVANNEAL, Fu=60Ksi Fy=45Ksi; C/W PAPER HONEY COMB OR NOA APPROVED STYRENE CORE
3	HINGE REINFORCINGS (DOOR)	1 1/4" X 10" X 10 GAUGE GALVANNEAL (.134 MIN)
4	HINGE REINFORCINGS (FRAME)	1 1/2" X 8 3/4" X 10 GAUGE GALVANNEAL (.134 MIN)
5	STRIKE REINFORCINGS (FRAME)	1 3/8" X 7 5/16" X 14 GAUGE GALVANNEAL (.072 MIN)
6	WIRE MASONRY FRAME ANCHOR	9 1/2" LONG X 10 GAUGE (.134 MIN) Fu=95.9 Ksi Fy=40.2 Ksi
7	2 PIECE SNAP-IN ANCHOR	1 13/16" X 4 1/8" X 20 GAUGE GALVANNEAL (.032 MIN), SNAPPED TO ACHIEVE 5 5/8" TOTAL DEPTH
8	EMA ANCHOR BOLTS	3/8" X 5" STEEL UNICAN-SLEEVE ANCHOR, 2 1/4" EMBEDMENT & 3" MIN. E.D.
8A	EMA BUTTERFLY ANCHOR (PART #PT1-008)	18 GAUGE (0.042") STEEL SATIN COAT
9	LAG SCREW	3/8"ø x 6" LAG SCREW
10	HINGES-HAGER BB1191	4.5" X 4.5" STANDARD WEIGHT (.134 THICK)
12	MORTISE DEVICE: SCHLAGE L9000 SERIES	N/A
13	CYLINDRICAL LOCK: SCHLAGE D SERIES	N/A
14	DEAD BOLT: SCHLAGE B SERIES	N/A
15	WEATHER STRIP: NATIONAL GUARD PRODUCTS #120NA	SECURED WITH DOUBLE ROW OF #6 X 1/2" SMS SCREWS @ 1" FROM EA. END & BALANCE @ 4" O.C.
16	THRESHOLD: NATIONAL GUARD PRODUCTS #950NA	EXTRUDED ALUMINUM 6063-T6, 0.078" THK. W/ NEOPRENE BULB
17	CAULKING: GE SILICONE II	N/A
18	DOOR END CHANNEL REINFORCEMENT	16 GAGE (0.051" MIN.) GALVANNEAL STEEL
19	DOOR SURFACE CLOSER REINFORCEMENT	14 GAGE (0.072" MIN.) x 3 1/2" x 1.6875 x 16.250" LONG. GALVANNEAL.
22	#161 LOCK EDGE REINFORCING	16 GAGE (0.051" MIN.)
23	DEAD LOCK STRIKE TAB	14 GAGE (0.072" MIN.) GALVANNEAL, ATTACHED TO STRIKE JAMB W/(3) 1/8"ø PROJECTION WELDS
25	THRESHOLD ANCHOR	1/4"ø ULTRACONS BY ELCO CONSTRUCTION PRODUCTS , 1 3/4" MIN. EMBEDMENT & 3" MIN. E.D @ f'c=3ksi CONCRETE SILL
26	MORTISE LOCK REINFORCEMENT	ANSI #A115.1 #86, 0.072"MIN.
28	Z ANCHOR	18 GAGE (0.042") GALVANNEAL, W/ Fy= 33Ksi, Fu= 44Ksi
29	T STRAP ANCHOR DAYBAR # PT1-001A	18 GAGE (0.042") GALVANNEAL, W/ Fy= 33Ksi, Fu= 44Ksi

PRODUCT REVISED
as complying with the Florida Building Code
NOA-No. 20-0813.13
Expiration Date 01/19/2022
By Ishaq I. Chanda
Miami-Dade Product Control

WALTER A. TILLIT JR. LICENSE No. 44167 STATE OF FLORIDA PROFESSIONAL ENGINEER
7/6/2020

FLORIDA BUILDING CODE (HIGH VELOCITY HURRICANE ZONE)

©2020 TILTECO, INC.

TILTECO INC.
TILLIT TESTING & ENGINEERING COMPANY
6355N.W. 36th. St., Ste. 305, VIRGINIA GARDENS, Fl. 33166
Phone : (305)871-1530 . Fax : (305)871-1531
e-mail: tilteco@aol.com
CA-0006719
WALTER A. TILLIT Jr. P.E.
FLORIDA Lic. # 44167

SERIES LS20GA FLUSH COMMERCIAL STEEL INSWING DOOR W/SERIES "AS" 18GA STEEL FRAME

DAYBAR INDUSTRIES LTD
50 WEST DRIVE, BRAMPTON, ON CANADA, L6T 2J4
TEL: 905 625-8000
FAX: 905 625-4204

REV. No	DESCRIPTION	DATE	REV. No	DESCRIPTION	DATE
1	OLD 17-084	06/29/2020	3		
2			4		

DRAWN BY: M.P
06/29/2020 DATE
20-145 DRAWING No
SHEET 5 OF 13

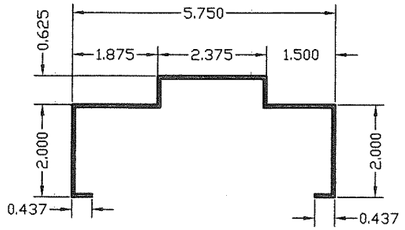

① AS 5 3/4" TYPICAL SECTION THROUGH

MATERIAL:
GAUGE 18 (0.042)
MINIMUM GALVANNEAL

1A AS 5 3/4" TYPICAL SECTION THROUGH

MATERIAL:
GAUGE 18 (0.042)
MINIMUM STAINLESS STEEL

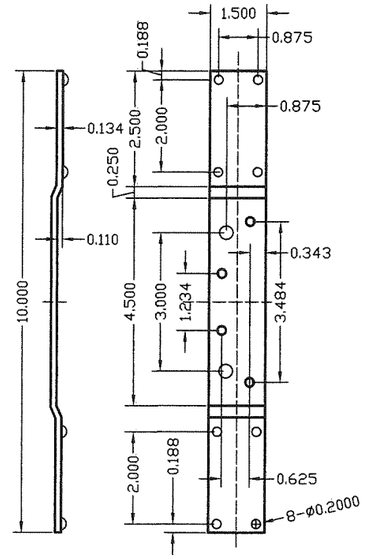

③ DOOR HINGE REINFORCING

MATERIAL:
GAUGE 10 (0.134) MINIMUM
GALVANNEAL

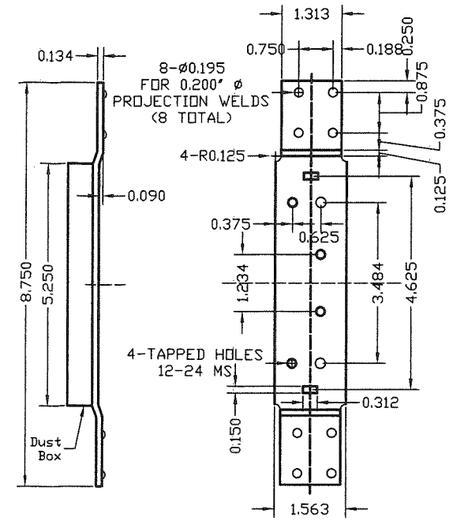

④ 4 1/2" FRAME HINGE REINFORCING

MATERIAL:
GAUGE 10 (0.134" MINIMUM)
GALVANNEAL

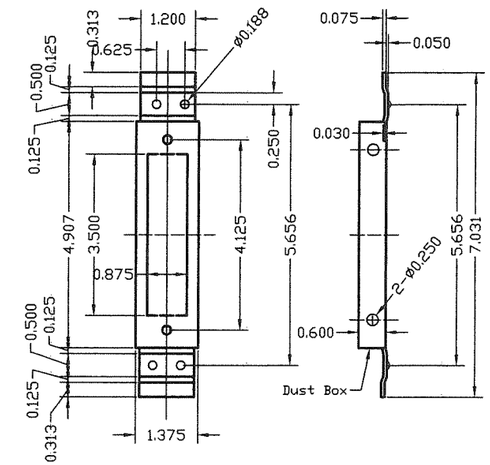

⑤ 4 7/8" STRIKE REINFORCEMENT FOR FRAME

MATERIAL:
GAUGE 12 (0,072 MINIMUM)
GALVANNEAL

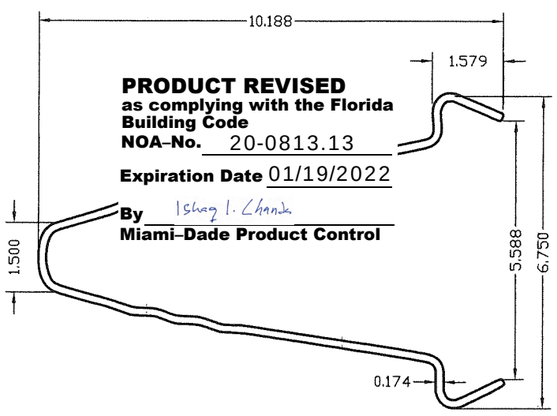

PRODUCT REVISED
as complying with the Florida Building Code
NOA-No. 20-0813.13
Expiration Date 01/19/2022
By Ishwar I. Chanda
Miami-Dade Product Control

⑥ WIRE ANCHOR

STEEL WIRE ANCHORS
(0.134" DIA, 10 GAGE, 18 5/8"
EMBEDMENT LENGTH)
IN HORIZ.

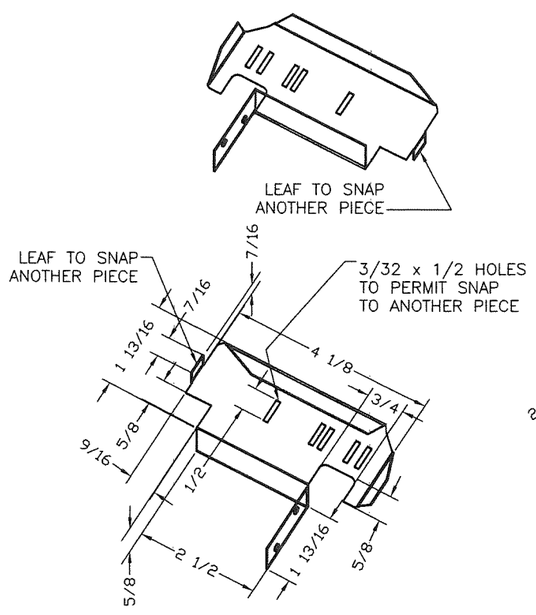

⑦ 2 PIECE SNAP-IN STUD ANCHOR

CLIPIN STUD ANCHOR MATERIAL:
GAUGE 20 (0.032) ASTM A-653,
GALVANNEALED STEEL.

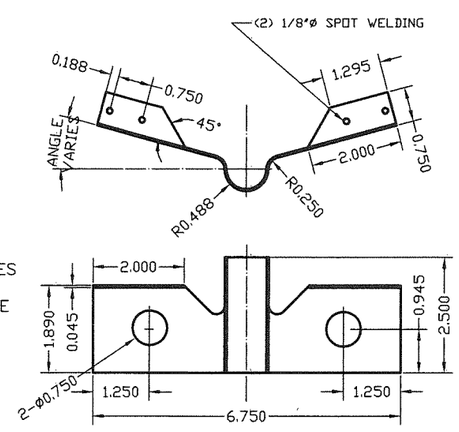

8A EMA BUTTERFLY ANCHOR (PART #PT1-008)

MATERIAL: 18 GA (0.042") SATIN COAT

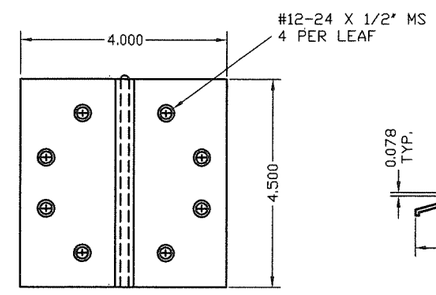

⑩ HINGES-HAGER BB1279

t=0.134" THICK

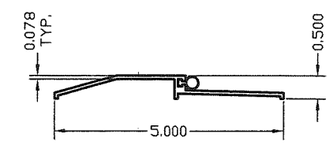

⑯ EXTRUDED ALUMINUM THRESHOLD NGP #950NA W/ NEOPRENE BULB

FLORIDA BUILDING CODE (HIGH VELOCITY HURRICANE ZONE)

WALTER A. TILLIT JR. LICENSE No. 44167 STATE OF FLORIDA PROFESSIONAL ENGINEER

7/6/2020

©2020 TILTECO, INC.

TILTECO INC.
TILLIT TESTING & ENGINEERING COMPANY
6355N.W. 36th. St., Ste. 305, VIRGINIA GARDENS, Fl. 33166
Phone : (305)871-1530 : Fax : (305)871-1531
e-mail: tilteco@aol.com
CA-0006719
WALTER A. TILLIT Jr. P.E.
FLORIDA Lic. # 44167

SERIES LS20GA FLUSH COMMERCIAL
STEEL INSWING DOOR W/SERIES "AS"
18GA STEEL FRAME

DAYBAR INDUSTRIES LTD
50 WEST DRIVE, BRAMPTON,
ON CANADA, L6T 2J4
TEL: 905 625-8000
FAX: 905 625-4204

REV. No	DESCRIPTION	DATE	REV. No	DESCRIPTION	DATE
1	OLD 17-084	06/29/2020	3		
2			4		

DRAWN BY: M.P
06/29/2020 DATE
20-145 DRAWING No
SHEET 6 OF 13

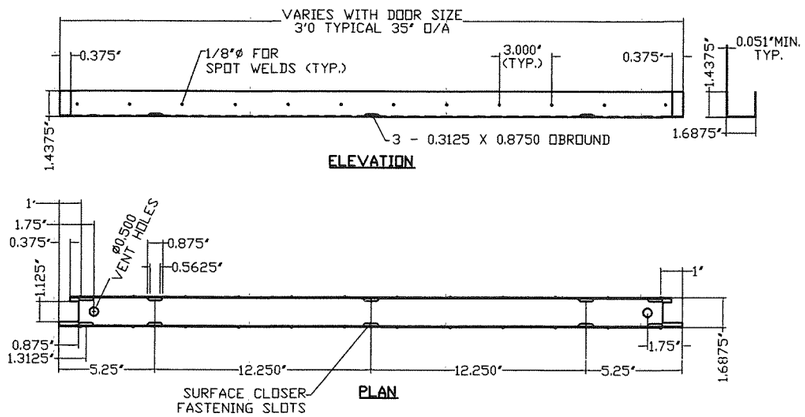

(18) DOOR END CHANNEL REINFORCEMENT

MATERIAL:
16 GAUGE (0.051) MINIMUM
GALVANNEAL

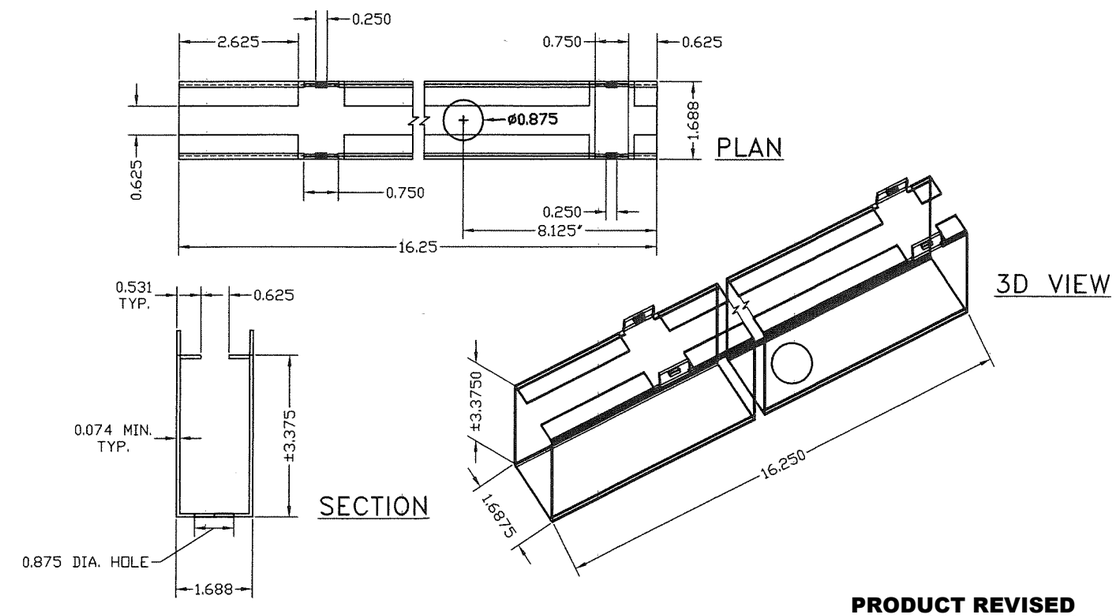

(19) DOOR SURFACE CLOSER REINFORCING

MATERIAL:
14 GAUGE (0.072)
MINIMUM GALVANNEAL

PRODUCT REVISED
as complying with the Florida Building Code
NOA-No. 20-0813.13
Expiration Date 01/19/2022
By Ishaq I. Chanda
Miami-Dade Product Control

WALTER A. TILLIT JR.
LICENSE
No. 44167
STATE OF
FLORIDA
PROFESSIONAL ENGINEER

7/6/2020

FLORIDA BUILDING CODE (HIGH VELOCITY HURRICANE ZONE)

©2020 TILTECO, INC.

TILTECO INC.
TILLIT TESTING & ENGINEERING COMPANY
6355N.W. 36th. St., Ste. 305, VIRGINIA GARDENS, Fl. 33166
Phone : (305)871-1530 . Fax : (305)871-1531
e-mail: tilteco@aol.com
CA-0006719
WALTER A. TILLIT Jr. P.E.
FLORIDA Lic. # 44167

SERIES LS20GA FLUSH COMMERCIAL
STEEL INSWING DOOR W/SERIES "AS"
18GA STEEL FRAME

DAYBAR INDUSTRIES LTD
50 WEST DRIVE, BRAMPTON,
ON CANADA, L6T 2J4
TEL: 905 625-8000
FAX: 905 625-4204

REV. No	DESCRIPTION	DATE	REV. No	DESCRIPTION	DATE
1	OLD 17-084	06/29/2020	3		
2			4		

DRAWN BY: M.P
06/29/2020
DATE
20-145
DRAWING No
SHEET 7 OF 13

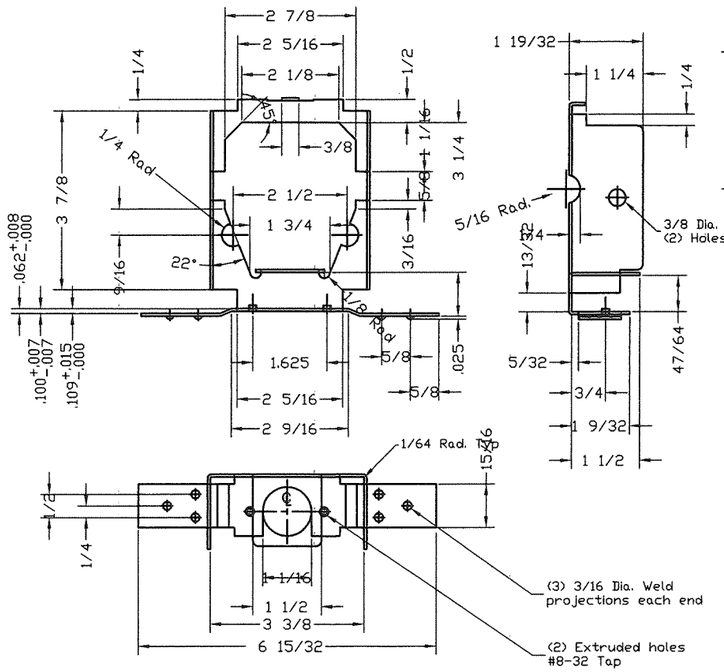

22 #161 LOCK REINFORCINGS

Material: 16 Ga (0.051) MIN.

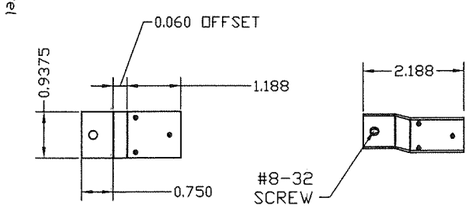

23 DEAD LOCK STRIKE TAB 14 GA (0.072) MIN

ATTACHED TO STRIKE JAMB W/
(3) 1/8"ø PROJECTION WELDS.

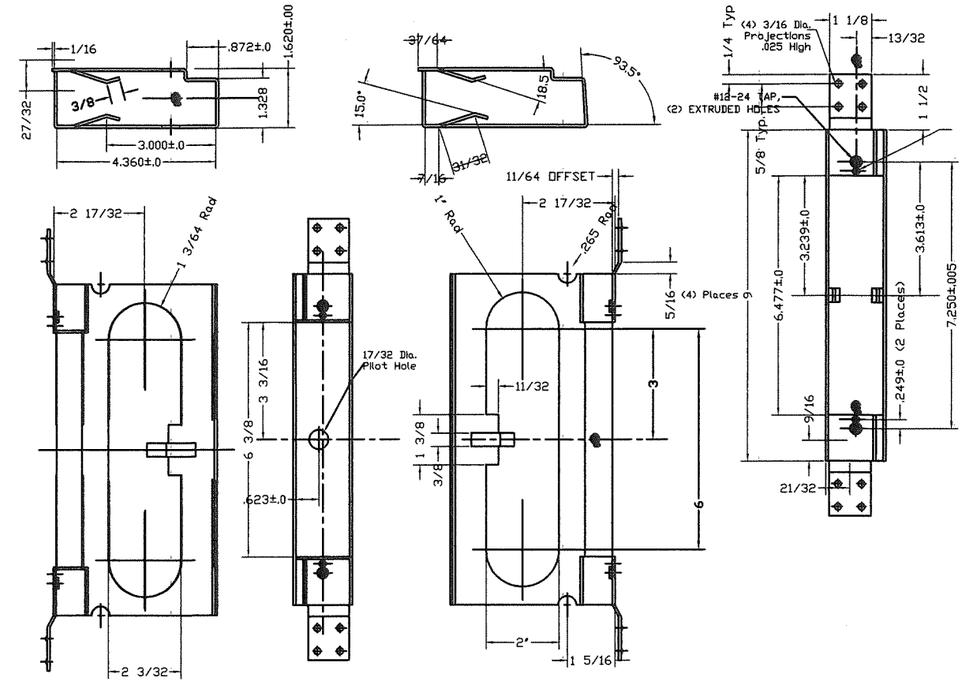

26 ANSI #A115.1 #86 MORTISE LOCK REINFORCEMENT

MATERIAL: 14GA. (0.072) ELECTRO ZINC

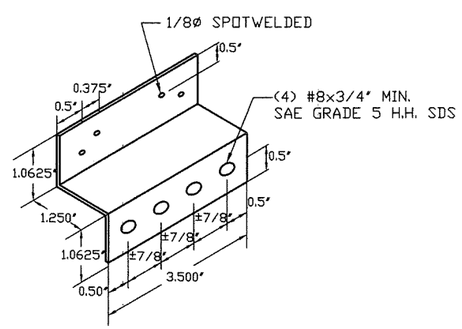

28 Z ANCHOR

MINIMUM 18GA (0.042"), GALVANNEAL

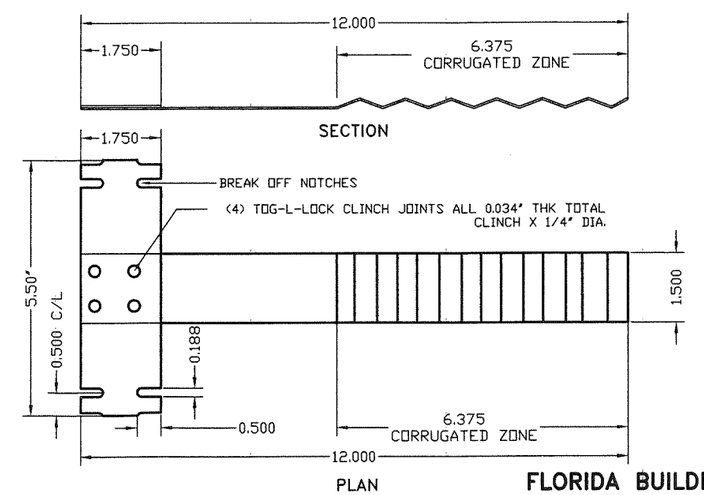

29 T STRAP ANCHOR

MINIMUM 18GA (0.042"), GALVANNEAL

PRODUCT REVISED
as complying with the Florida Building Code
NOA-No. 20-0813.13
Expiration Date 01/19/2022
By Ishaq I. Chanda
Miami-Dade Product Control

WALTER A. TILLIT JR. LICENSE No. 44167 STATE OF FLORIDA PROFESSIONAL ENGINEER
7/6/2020

FLORIDA BUILDING CODE (HIGH VELOCITY HURRICANE ZONE)

©2020 TILTECO, INC.

TILTECO INC.
TILLIT TESTING & ENGINEERING COMPANY
6355N.W. 36th. St., Ste. 305, VIRGINIA GARDENS, Fl. 33166
Phone : (305)871-1530 . Fax : (305)871-1531
e-mail: tilteco@aol.com
CA-0006719
WALTER A. TILLIT Jr. P.E.
FLORIDA Lic. # 44167

SERIES LS20GA FLUSH COMMERCIAL STEEL INSWING DOOR W/SERIES "AS" 18GA STEEL FRAME

DAYBAR INDUSTRIES LTD
50 WEST DRIVE, BRAMPTON, ON CANADA, L6T 2J4
TEL: 905 625-8000
FAX: 905 625-4204

REV. No	DESCRIPTION	DATE	REV. No	DESCRIPTION	DATE
1	OLD 17-084.	06/29/2020	3		
2			4		

DRAWN BY: M.P
06/29/2020 DATE
20-145 DRAWING No

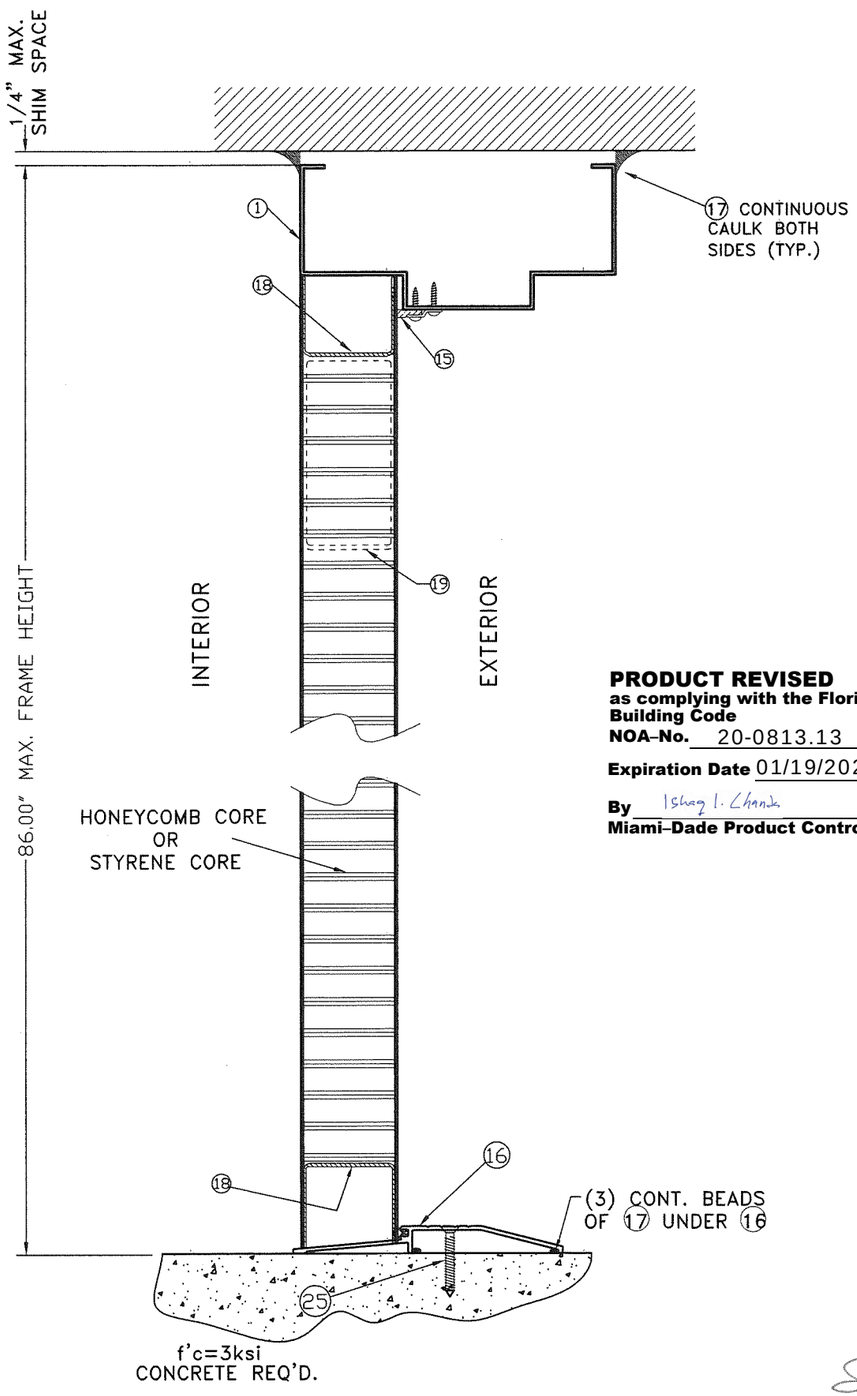

PRODUCT REVISED
as complying with the Florida Building Code
NOA-No. 20-0813.13
Expiration Date 01/19/2022
By Ishwar I. Chandra
Miami-Dade Product Control

SECTIONS A1–A1 & A2–A2 AT DOOR PANEL/FRAME

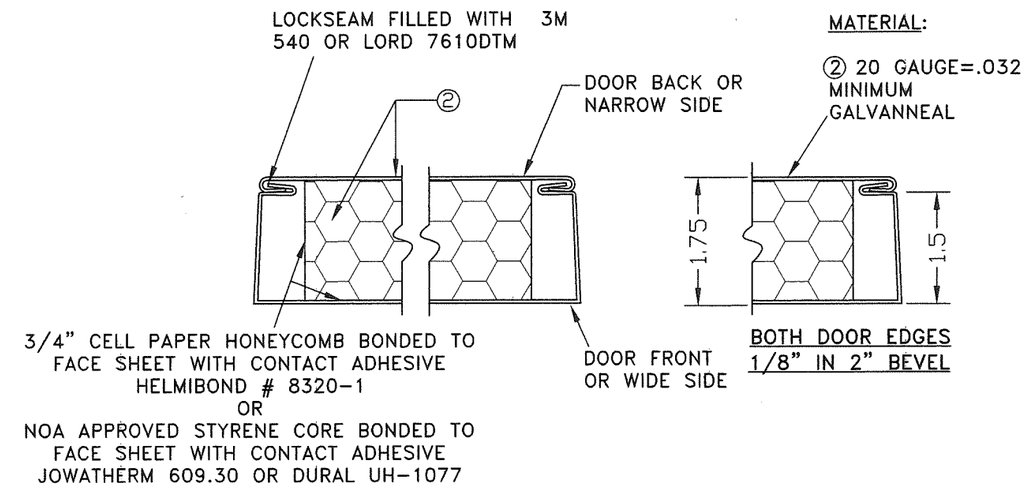

DOOR SECTION THROUGH EDGE SEAM, DETAIL X

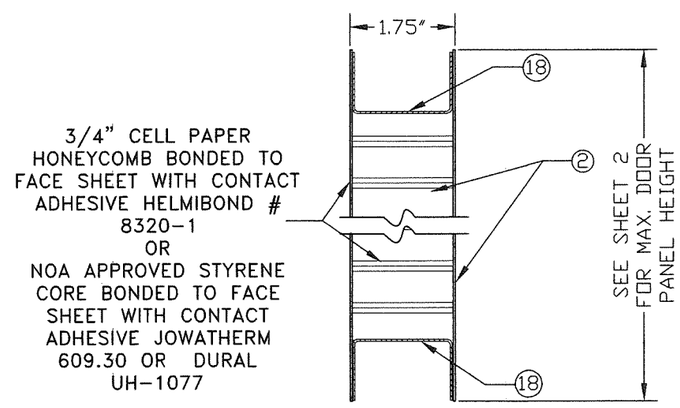

VERTICAL SECTION AT DOOR PANEL

DOOR PANEL CONSTRUCTION

FLORIDA BUILDING CODE (HIGH VELOCITY HURRICANE ZONE)

WALTER A. TILLIT JR. LICENSE No. 44167 STATE OF FLORIDA PROFESSIONAL ENGINEER

7/6/2020

©2020 TILTECO, INC.

TILTECO INC.
TILLIT TESTING & ENGINEERING COMPANY
6355N.W. 36th. St., Ste. 305, VIRGINIA GARDENS, Fl. 33166
Phone : (305)871-1530 . Fax : (305)871-1531
e-mail: tilteco@aol.com
CA-0006719
WALTER A. TILLIT Jr. P.E.
FLORIDA Lic. # 44167

SERIES LS20GA FLUSH COMMERCIAL STEEL INSWING DOOR W/SERIES "AS" 18GA STEEL FRAME

DAYBAR INDUSTRIES LTD
50 WEST DRIVE, BRAMPTON, ON CANADA, L6T 2J4
TEL: 905 625-8000
FAX: 905 625-4204

REV. No	DESCRIPTION	DATE	REV. No	DESCRIPTION	DATE
1	OLD 17-084	06/29/2020	3		
2			4		

DRAWN BY: M.P
06/29/2020 DATE
20-145 DRAWING No
SHEET 9 OF 13

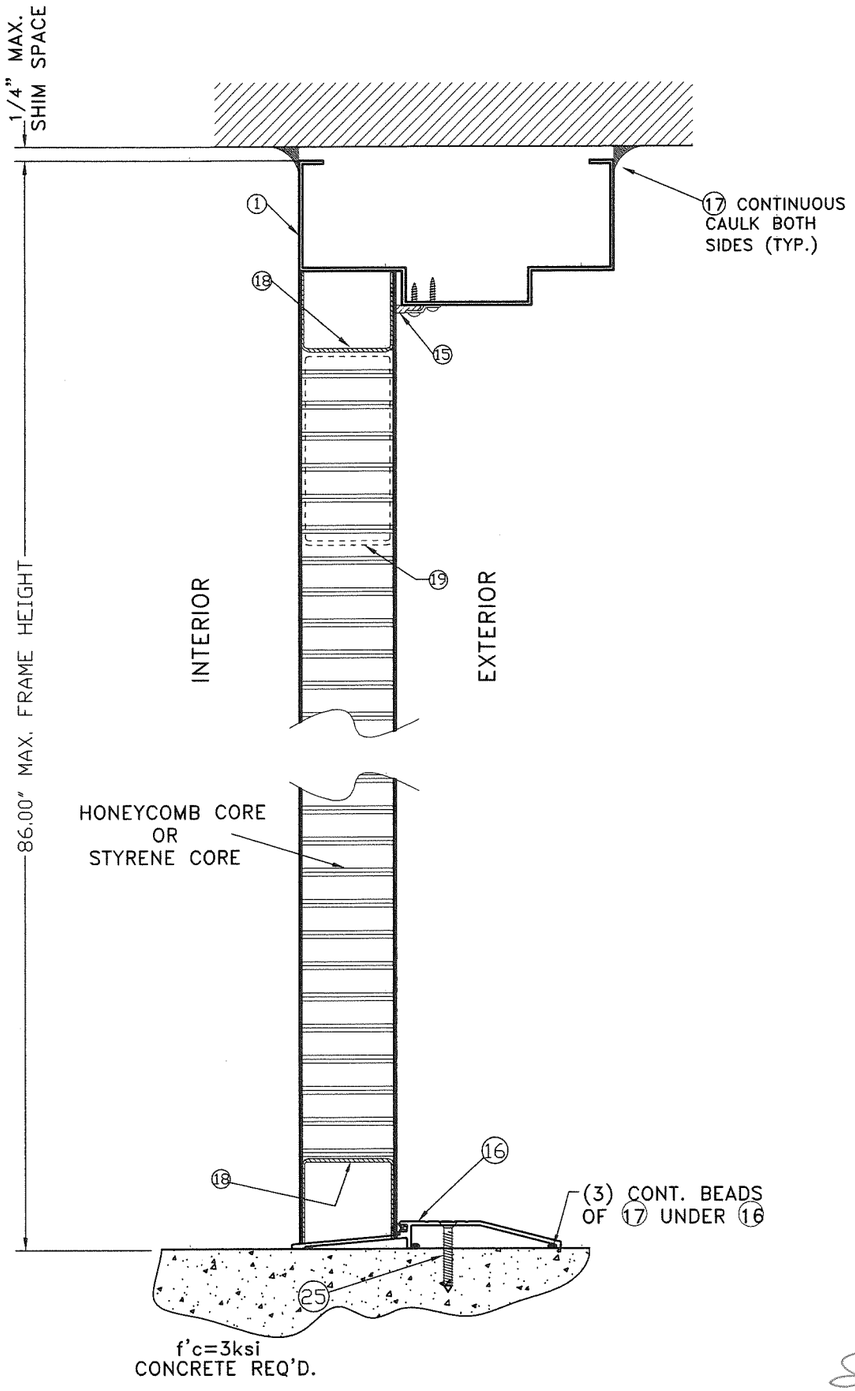

SECTIONS A1–A1 & A2–A2 AT DOOR PANEL/FRAME

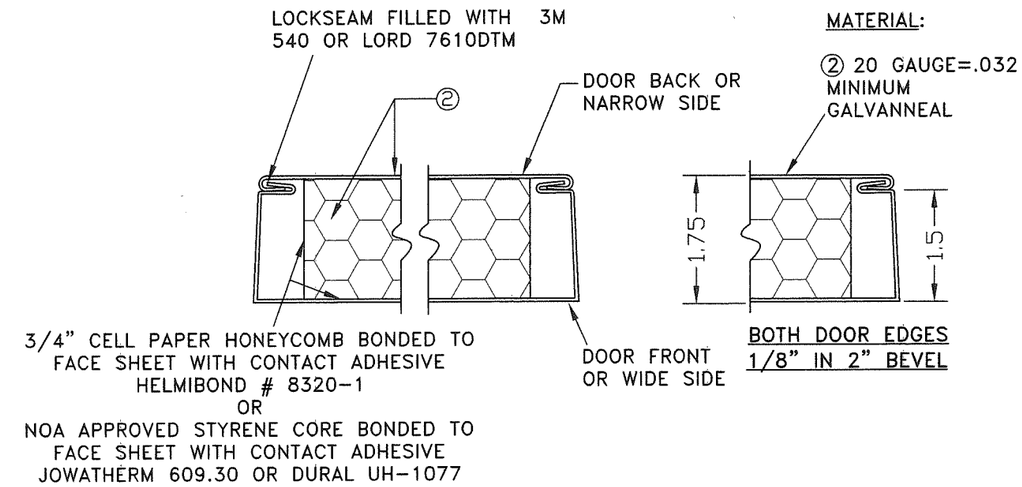

DOOR SECTION THROUGH EDGE SEAM, DETAIL X

PRODUCT REVISED
as complying with the Florida Building Code
NOA-No. 20-0813.13
Expiration Date 01/19/2022
By Ishwar I. Chandu
Miami-Dade Product Control

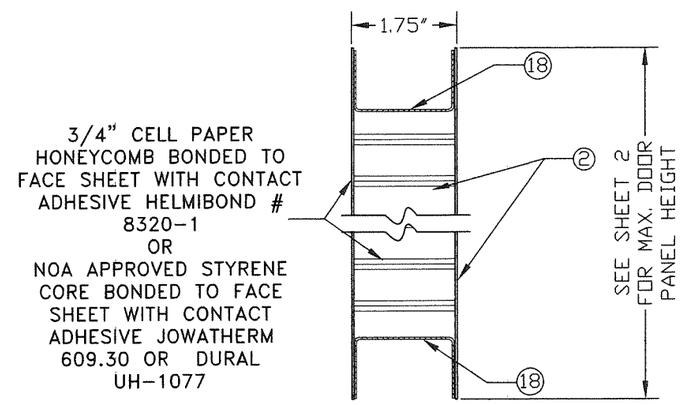

VERTICAL SECTION AT DOOR PANEL

DOOR PANEL CONSTRUCTION

FLORIDA BUILDING CODE (HIGH VELOCITY HURRICANE ZONE)

WALTER A. TILLIT JR. LICENSE No. 44167 STATE OF FLORIDA PROFESSIONAL ENGINEER

7/9/2020

©2020 TILTECO, INC.

TILTECO INC.
TILLIT TESTING & ENGINEERING COMPANY
6355N.W. 36th. St., Ste. 305, VIRGINIA GARDENS, Fl. 33166
Phone : (305)871-1530 · Fax : (305)871-1531
e-mail: tilteco@aol.com
CA-0006719
WALTER A. TILLIT Jr. P.E.
FLORIDA Lic. # 44167

SERIES LS20GA FLUSH COMMERCIAL STEEL INSWING DOOR W/SERIES "AS" 18GA STEEL FRAME

DAYBAR INDUSTRIES LTD
50 WEST DRIVE, BRAMPTON, ON CANADA, L6T 2J4
TEL: 905 625-8000
FAX: 905 625-4204

REV. No	DESCRIPTION	DATE	REV. No	DESCRIPTION	DATE
1	OLD 17-084	06/29/2020	3		
2			4		

DRAWN BY: M.P
06/29/2020 DATE
20-145 DRAWING No
SHEET 9 OF 13

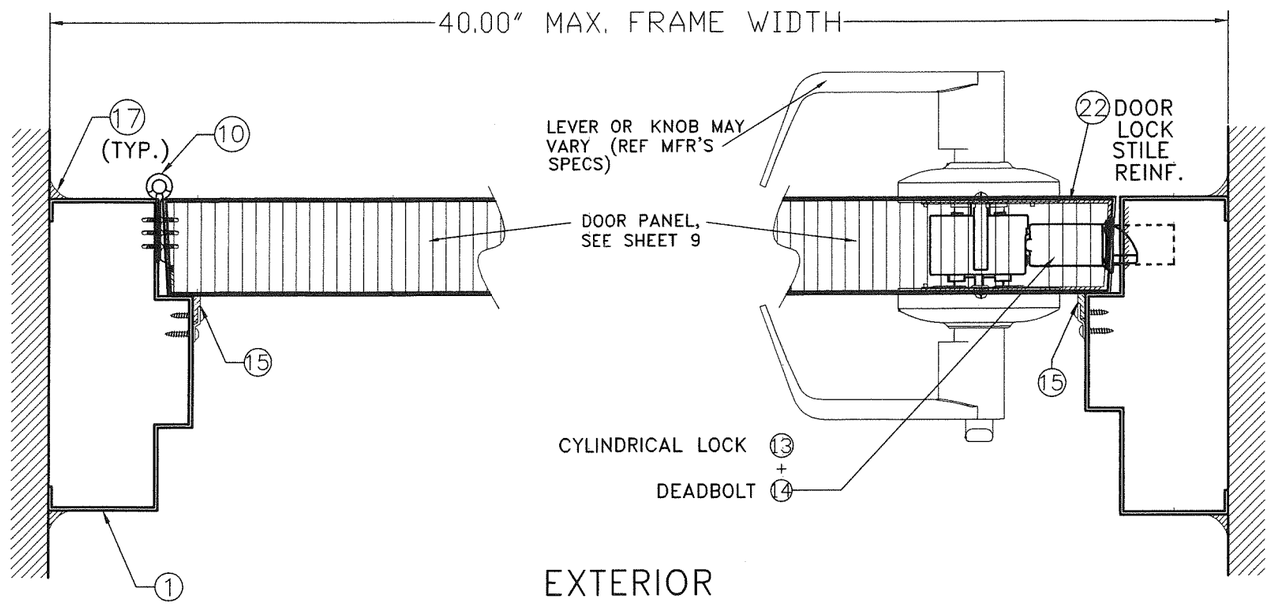

SECTION B1–B1

PRODUCT REVISED
as complying with the Florida Building Code
NOA-No. 20-0813.13
Expiration Date 01/19/2022
By Ishaq I. Chanda
Miami-Dade Product Control

WALTER A. TILLIT JR. LICENSE No. 44167 STATE OF FLORIDA PROFESSIONAL ENGINEER

7/6/20

FLORIDA BUILDING CODE (HIGH VELOCITY HURRICANE ZONE)

©2020 TILTECO, INC.

TILTECO INC.
TILLIT TESTING & ENGINEERING COMPANY
6355N.W. 36th. St., Ste. 305, VIRGINIA GARDENS, Fl. 33166
Phone : (305)871-1530 . Fax : (305)871-1531
e-mail: tilteco@aol.com
CA-0006719
WALTER A. TILLIT Jr. P.E.
FLORIDA Lic. # 44167

SERIES LS20GA FLUSH COMMERCIAL STEEL INSWING DOOR W/SERIES "AS" 18GA STEEL FRAME

DAYBAR INDUSTRIES LTD
50 WEST DRIVE, BRAMPTON, ON CANADA, L6T 2J4
TEL: 905 625-8000
FAX: 905 625-4204

REV. No	DESCRIPTION	DATE	REV. No	DESCRIPTION	DATE
1	OLD 17-084	06/29/2020	3		
2			4		

DRAWN BY: M.P

06/29/2020 DATE

20-145 DRAWING No

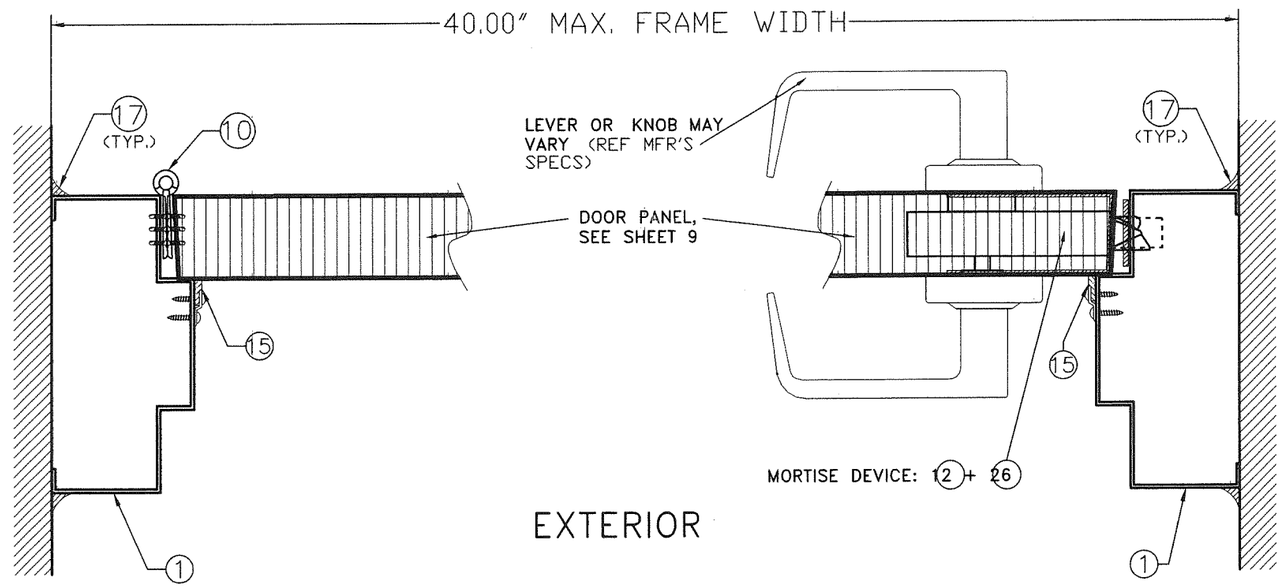

SECTION B2–B2

PRODUCT REVISED
as complying with the Florida Building Code
NOA-No. 20-0813.13
Expiration Date 01/19/2022
By Ishwar I. Chanda
Miami-Dade Product Control

WALTER A. TILLIT JR.
LICENSE
No. 44167
STATE OF FLORIDA
PROFESSIONAL ENGINEER

7/6/2020

FLORIDA BUILDING CODE (HIGH VELOCITY HURRICANE ZONE)

©2020 TILTECO, INC.

TILTECO INC.
TILLIT TESTING & ENGINEERING COMPANY
6355N.W. 36th. St., Ste. 305, VIRGINIA GARDENS, Fl. 33166
Phone : (305)871-1530 . Fax : (305)871-1531
e-mail: tilteco@aol.com
CA-0006719
WALTER A. TILLIT Jr. P.E.
FLORIDA Lic. # 44167

SERIES LS20GA FLUSH COMMERCIAL STEEL INSWING DOOR W/SERIES "AS" 18GA STEEL FRAME

DAYBAR INDUSTRIES LTD
50 WEST DRIVE, BRAMPTON, ON CANADA, L6T 2J4
TEL: 905 625-8000
FAX: 905 625-4204

REV. No	DESCRIPTION	DATE	REV. No	DESCRIPTION	DATE
1	OLD 17-084	06/29/2020	3		
2			4		

DRAWN BY: M.P
06/29/2020 DATE
20-145 DRAWING No
SHEET 11 OF 13

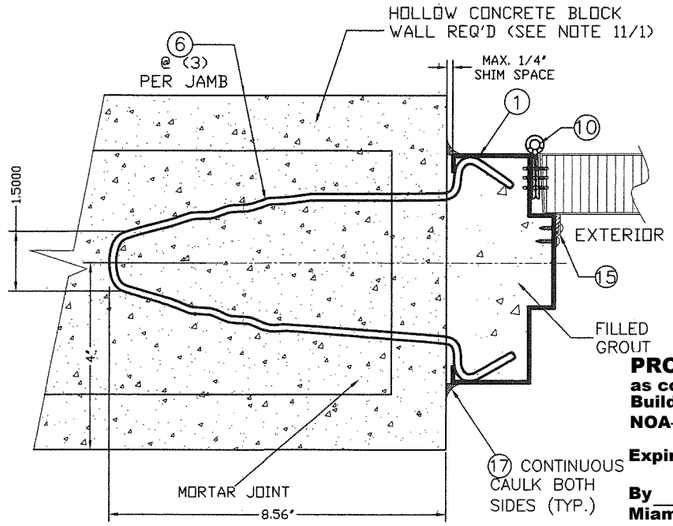

SECTION C

PRODUCT REVISED
as complying with the Florida Building Code
NOA-No. 20-0813.13
Expiration Date 01/19/2022
By Ishay I. Chank
Miami-Dade Product Control

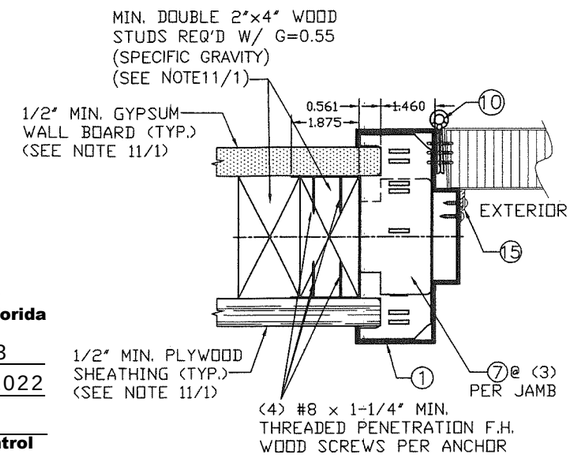

SECTION E

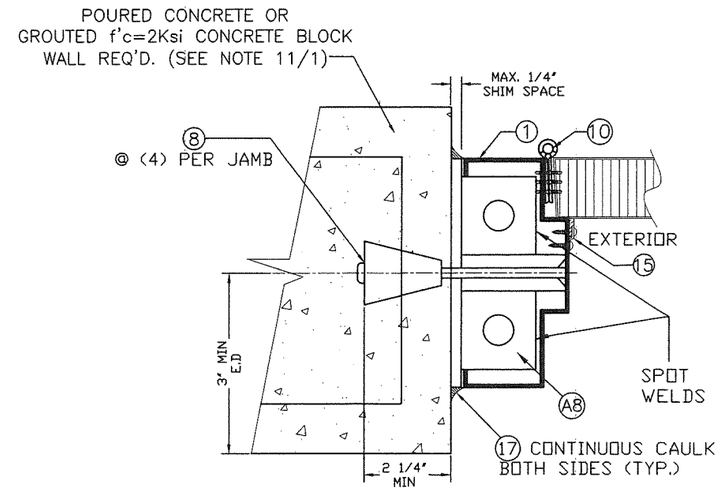

SECTION F

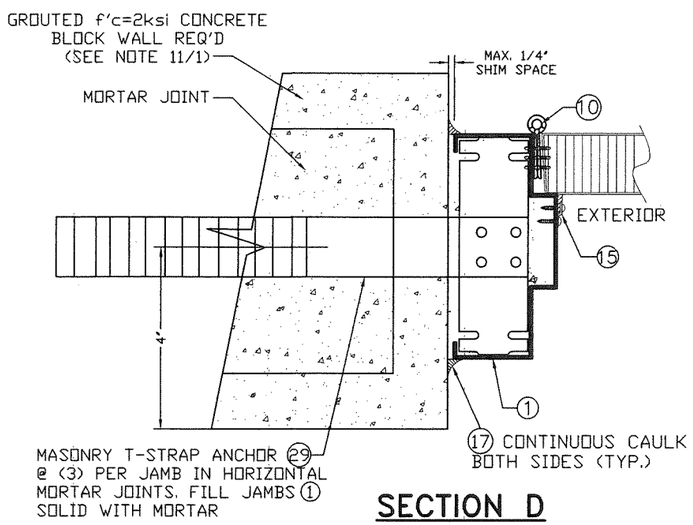

SECTION D

CASE 1

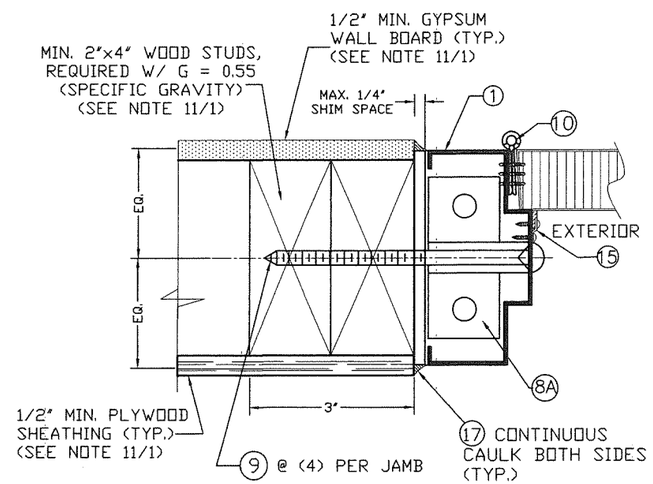

SECTION G

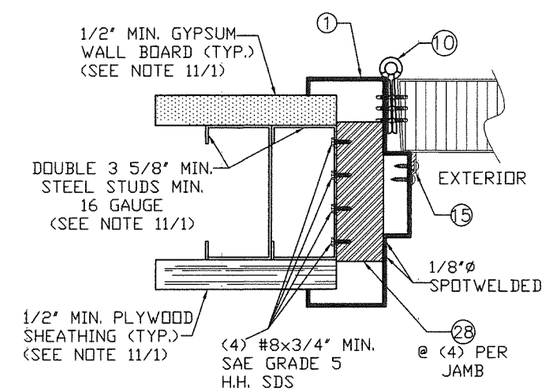

SECTION H

CASE 2

ANCHORAGE DETAIL AT JAMBS

WALTER A. TILLIT JR. LICENSE No. 44167 STATE OF FLORIDA PROFESSIONAL ENGINEER

7/6/20

FLORIDA BUILDING CODE (HIGH VELOCITY HURRICANE ZONE)

©2020 TILTECO, INC.

TILTECO INC.
TILLIT TESTING & ENGINEERING COMPANY
6355N.W. 36th. St., Ste. 305, VIRGINIA GARDENS, Fl. 33166
Phone : (305)871-1530 . Fax : (305)871-1531
e-mail: tilteco@aol.com
CA-0006719
WALTER A. TILLIT Jr. P.E.
FLORIDA Lic. # 44167

SERIES LS20GA FLUSH COMMERCIAL STEEL INSWING DOOR W/SERIES "AS" 18GA STEEL FRAME

DAYBAR INDUSTRIES LTD
50 WEST DRIVE, BRAMPTON, ON CANADA, L6T 2J4
TEL: 905 625-8000
FAX: 905 625-4204

REV. No	DESCRIPTION	DATE	REV. No	DESCRIPTION	DATE
1	OLD 17-084	06/29/2020	3		
2			4		

DRAWN BY: M.P
06/29/2020 DATE
20-145 DRAWING No
SHEET 12 OF 13

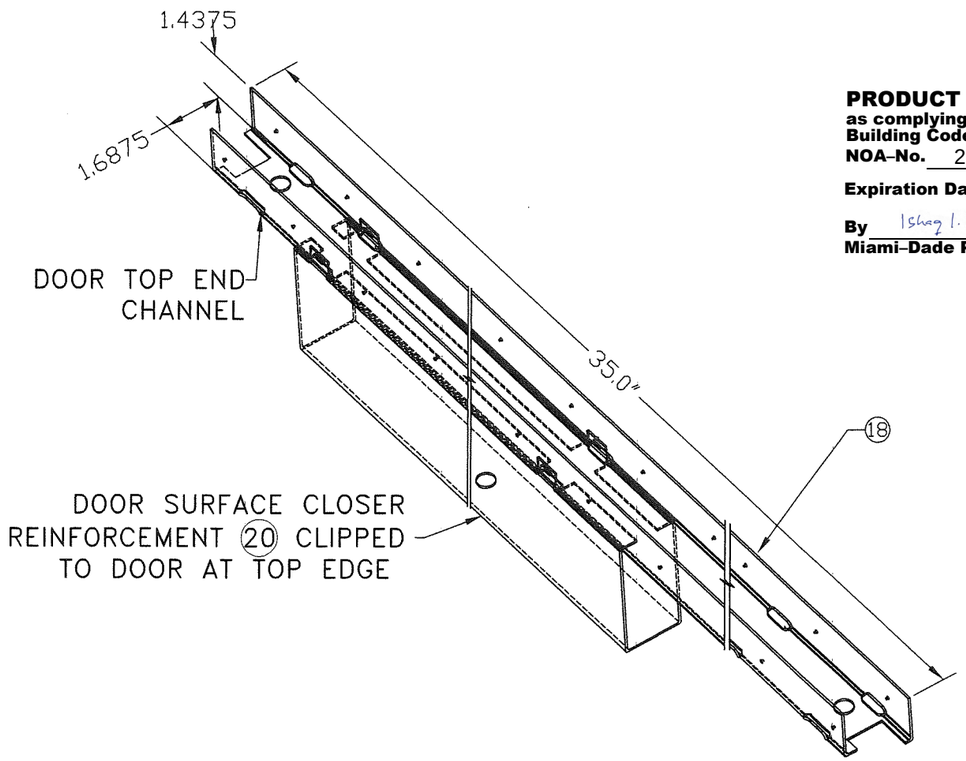

DOOR SURFACE CLOSER REINFORCEMENT 20 AND END CHANNEL 18 ASSEMBLY DETAIL

DETAIL Z

PRODUCT REVISED
as complying with the Florida Building Code
NOA-No. 20-0813.13
Expiration Date 01/19/2022
By Ishwar I. Chanda
Miami-Dade Product Control

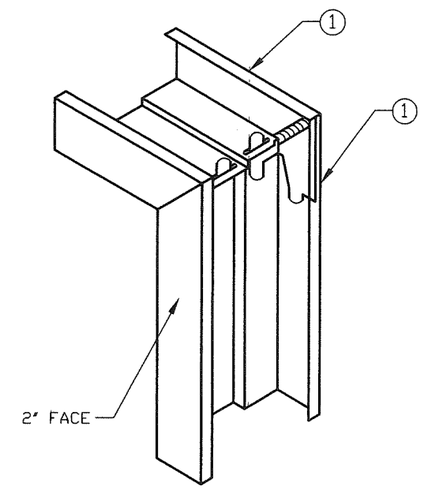

1. DIEMITERED CORNER CONT. WELDED INSIDE FACES & AT RETURNS
2. CAULK COMPLETE INSIDE CORNER WITH GE SILICONE II 17

DETAIL Y

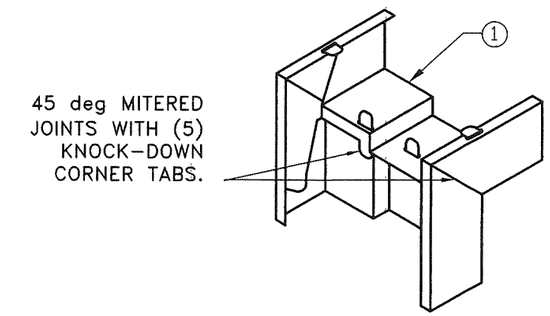

FRAME CORNER:
KD 3 PIECE ASSEMBLED AND CAULKED W/ 17

DETAIL Y1

CORNER DETAILS Y, Y1

WALTER A. TILLIT JR. LICENSE No. 44167 STATE OF FLORIDA PROFESSIONAL ENGINEER

7/6/20

FLORIDA BUILDING CODE (HIGH VELOCITY HURRICANE ZONE)

©2020 TILTECO, INC.

TILTECO INC.
TILLIT TESTING & ENGINEERING COMPANY
6355N.W. 36th. St., Ste. 305, VIRGINIA GARDENS, Fl. 33166
Phone : (305)871-1530 . Fax : (305)871-1531
e-mail: tilteco@aol.com
CA-0006719
WALTER A. TILLIT Jr. P.E.
FLORIDA Lic. # 44167

SERIES LS20GA FLUSH COMMERCIAL STEEL INSWING DOOR W/SERIES "AS" 18GA STEEL FRAME

DAYBAR INDUSTRIES LTD
50 WEST DRIVE, BRAMPTON, ON CANADA, L6T 2J4
TEL: 905 625-8000
FAX: 905 625-4204

REV. No	DESCRIPTION	DATE	REV. No	DESCRIPTION	DATE
1	OLD 17-084	06/29/2020	3		
2			4		

DRAWN BY: M.P
06/29/2020 DATE
20-145 DRAWING No
SHEET 13 OF 13