MIAMI-DADE COUNTY
DEPARTMENT OF REGULATORY AND ECONOMIC RESOURCES (RER)
BOARD AND CODE ADMINISTRATION DIVISION

MIAMI-DADE COUNTY
PRODUCT CONTROL SECTION
11805 SW 26 Street, Room 208
Miami, Florida 33175-2474
T (786) 315-2590 F (786) 315-2599
www.miamidade.gov/economy

NOTICE OF ACCEPTANCE (NOA)

OutFront Media, Inc.
8530 NW 23rd Street
Doral, Florida 33122

SCOPE:

This NOA is being issued under the applicable rules and regulations governing the use of construction materials. The documentation submitted has been reviewed and accepted by Miami-Dade County RER- Product Control Section to be used in Miami Dade County and other areas where allowed by the Authority Having Jurisdiction (AHJ).

This NOA shall not be valid after the expiration date stated below. The Miami-Dade County Product Control Section (In Miami Dade County) and/or the AHJ (in areas other than Miami Dade County) reserve the right to have this product or material tested for quality assurance purposes. If this product or material fails to perform in the accepted manner, the manufacturer will incur the expense of such testing and the AHJ may immediately revoke, modify, or suspend the use of such product or material within their jurisdiction. RER reserves the right to revoke this acceptance if it is determined by Miami-Dade County Product Control Section that this product or material fails to meet the requirements of the applicable building code.

This product is approved as described herein and has been designed to comply with the High Velocity Hurricane Zone of the Florida Building Code.

DESCRIPTION: Miami Bus Shelter Slim Version W/O Oppi Pal-Li Solar Display Panel

APPROVAL DOCUMENT: Drawing No. 20-033, titled "Miami Bus Shelter Slim Version W/O Oppi Pal-Li Solar Display Panel", sheets 1 through 15 of 15 including 11A, prepared by Tilteco, Inc., dated Sept. 03, 2020, signed and sealed by Walter A. Tillit Jr., P.E., on Sept. 08, 2020, bearing Miami-Dade County Product Control Revision stamp with the Notice of Acceptance number and expiration date by the Miami-Dade County Product Control Section.

MISSILE IMPACT RATING: None

LABELING: Each bus shelter shall bear a permanent label with the manufacturer's name or logo, city, state and the following statement: "Miami-Dade County Product Control Approved", unless otherwise noted herein.

RENEWAL of this NOA shall be considered after a renewal application has been filed and there has been no change in the applicable building code negatively affecting the performance of this product.

TERMINATION of this NOA will occur after the expiration date or if there has been a revision or change in the materials, use, and/or manufacture of the product or process. Misuse of this NOA as an endorsement of any product, for sales, advertising or any other purposes shall automatically terminate this NOA. Failure to comply with any section of this NOA shall be cause for termination and removal of NOA.

ADVERTISEMENT: The NOA number preceded by the words Miami-Dade County, Florida, and followed by the expiration date may be displayed in advertising literature. If any portion of the NOA is displayed, then it shall be done in its entirety.

INSPECTION: A copy of this entire NOA shall be provided to the user by the manufacturer or its distributors and shall be available for inspection at the job site at the request of the Building Official. This approval is limited to only the Structural Adequacy of the Bus Shelter and the display unit. All others are not part of this Approval.

This NOA **revises NOA # 15-0818.16** and consists of this page 1, the evidence submitted pages E-1, E-2, & E-3 as well as approval document mentioned above.
The submitted documentation was reviewed by **Helmy A. Makar, P.E., M.S.**

MIAMI-DADE COUNTY APPROVED

Helmy A. Makar
10/22/20

NOA No. 20-0922.02
Expiration Date: 10/22/2025
Approval Date: 10/22/2020

OutFront Media, Inc.

NOTICE OF ACCEPTANCE: EVIDENCE SUBMITTED

1. EVIDENCE SUBMITTED UNDER PREVIOUS APPROVAL # 08-0804.06

A. DRAWINGS:

1. *Drawing No. 07-229, titled "Miami Bus Shelter Slim Version W/O Oppi Pal-Li Solar Display Panel", sheets 1 through 15 of 15, prepared by Tilteco, Inc., dated 09/13/2007, last revision #2 dated 04/02/2008, signed and sealed by Walter A. Tillit Jr., P.E.*

B. TESTS:

1. *Test report on Uniform Static Air Pressure Test, TAS 202, of bus shelter roof panel, prepared by Fenestration Testing Laboratory, Inc., Report No. 3867, dated September 4, 2003, signed and sealed by Joseph Chan, P.E.*
2. *Test report on Uniform Static Air Pressure Test, TAS 202, of bus shelter solar roof panel, prepared by Fenestration Testing Laboratory, Inc., Report No. 3795, dated July 3, 2003, signed and sealed by Joseph Chan, P.E.*
3. *Test report on Uniform Static Air Pressure Test, TAS 202, of bus shelter rear panel back section, prepared by Fenestration Testing Laboratory, Inc., Report No. 3891, dated September 4, 2003, signed and sealed by Joseph Chan, P.E.*
4. *Test report on Uniform Static Air Pressure Test, TAS 202, of bus shelter roof panel, prepared by Fenestration Testing Laboratory, Inc., Report No. 3901, dated September 4, 2003, signed and sealed by Joseph Chan, P.E.*
5. *Test report on Uniform Static Air Pressure Test, TAS 202, of bus shelter solar display panel, prepared by Fenestration Testing Laboratory, Inc., Report No. 3792, dated September 4, 2003, signed and sealed by Joseph Chan, P.E.*
6. *Test report on Uniform Static Air Pressure Test, TAS 202, of bus shelter solar display panel, prepared by Fenestration Testing Laboratory, Inc., Report No. 3788, dated September 4, 2003, signed and sealed by Joseph Chan, P.E.*
7. *Test report on Gravity Load Test, of bus shelter Steel Rolled form Bench, prepared by Fenestration Testing Laboratory, Inc., Report No. 3920, dated September 3, 2003, signed and sealed by Joseph Chan, P.E.*

C. CALCULATIONS:

1. *Miami Bus Shelter Slim Version W/O Oppi Pal-Li Solar Display Panel design and anchor analysis dated August 01, 2008, Pages 1 through 34 of 34, prepared by Tilteco, Inc., signed and sealed by Walter A. Tillit Jr., P.E.*

D. QUALITY ASSURANCE:

1. *By Miami-Dade County Building Code Compliance Office.*
2. *Tensile Test Report No. 3926, prepared by Fenestration Testing Laboratory, Inc.*

E. MATERIAL CERTIFICATION:

1. *Mill Certified Test Report issued by Amerimet Corporation, dated 07/16/03 with chemical composition and mechanical properties of aluminum alloy 3003-H154.*

Helmy A. Makar, P.E., M.S.
Product Control Section Supervisor
NOA No. 20-0922.02
Expiration Date: 10/22/2025
Approval Date: 10/22/2020

NOTICE OF ACCEPTANCE: EVIDENCE SUBMITTED

2. EVIDENCE SUBMITTED UNDER PREVIOUS APPROVAL # 12-0227.20

DRAWINGS:

1. *Drawing No. 12-033, titled " Miami Bus Shelter Slim Version W/O Oppi Pal-Li Solar Display Panel", sheets 1 through 15 of 15, prepared by Tilteco, Inc., dated February 10, 2012, signed and sealed by Walter A. Tillit Jr., P.E., on February 21, 2012.*

B. TESTS:

1. *None.*

C. CALCULATIONS:

1. *Miami Bus Shelter Slim Version W/O Oppi Pal-Li Solar Display Panel design dated February 21, 2012, Pages 1 through 9 of 9, prepared by Tilteco, Inc., signed and sealed by Walter A. Tillit Jr., P.E.*

D. QUALITY ASSURANCE:

1. *By Miami-Dade County Department of Permitting, Environment, and Regulatory Affairs (PERA).*

E. MATERIAL CERTIFICATION:

1. *None.*

3. EVIDENCE SUBMITTED UNDER PREVIOUS APPROVAL #13-0815.02

A. DRAWINGS:

1. *None.*

B. TESTS:

1. *None.*

C. CALCULATIONS:

1. *None.*

D. QUALITY ASSURANCE:

1. *By Miami-Dade County Department of Regulatory and Economic Resources.*

E. MATERIAL CERTIFICATION:

1. *None.*

F. OTHERS

1. *Letter of compliance to the FBC, 2010 Edition, issued by Tilteco, Inc., dated August 06, 2013, signed and sealed by Walter A. Tillit Jr., P.E.*

Helmy A. Makar, P.E., M.S.
Product Control Section Supervisor
NOA No. 20-0922.02
Expiration Date: 10/22/2025
Approval Date: 10/22/2020

NOTICE OF ACCEPTANCE: EVIDENCE SUBMITTED

4. EVIDENCE SUBMITTED UNDER PREVIOUS APPROVAL #15-0818.16

A. DRAWINGS:

1. *Drawing No. 15-120, titled "Miami Bus Shelter Slim Version W/O Oppi Pal-Li Solar Display Panel", sheets 1 through 15 of 15, prepared by Tilteco, Inc., dated May 04, 2015, signed and sealed by Walter A. Tillit Jr., P.E., on May 07, 2015.*

B. TESTS:

1. *None.*

C. CALCULATIONS:

1. *None.*

D. QUALITY ASSURANCE:

1. *By Miami-Dade County Department of Regulatory and Economic Resources.*

E. MATERIAL CERTIFICATION:

1. *None.*

F. OTHERS

1. *Letter of compliance to the FBC, 2014 Edition, issued by Tilteco, Inc., dated May 04, 2015, signed and sealed by Walter A. Tillit Jr., P.E.*

5. NEW EVIDENCE SUBMITTED

A. DRAWINGS:

1. *Drawing No. 20-033, titled "Miami Bus Shelter Slim Version W/O Oppi Pal-Li Solar Display Panel", sheets 1 through 15 of 15 including 11A, prepared by Tilteco, Inc., dated Sept. 03, 2020, signed and sealed by Walter A. Tillit Jr., P.E., on Sept. 08, 2020.*

B. TESTS:

1. *None.*

C. CALCULATIONS:

1. *None.*

D. QUALITY ASSURANCE:

1. *By Miami-Dade County Department of Regulatory and Economic Resources.*

E. MATERIAL CERTIFICATION:

1. *None.*

F. OTHERS

1. *Letter of compliance to the FBC, 2017 Edition and 2020 Edition, issued by Tilteco, Inc., dated Sept. 03, 2020, signed and sealed by Walter A. Tillit Jr., P.E.*

Helmy A. Makar, P.E., M.S.
Product Control Section Supervisor
NOA No. 20-0922.02
Expiration Date: 10/22/2025
Approval Date: 10/22/2020

MIAMI BUS SHELTER SLIM VERSION W/O OPPI PAL-LI SOLAR DISPLAY PANEL

GENERAL NOTES:

(I) MIAMI BUS SHELTER SLIM VERSION W/O OPPI PAL-LI SOLAR DISPLAY PANEL

1.- MIAMI BUS SHELTER SLIM VERSION SHOWN ON THIS PRODUCT APPROVAL DOCUMENT (P.A.D.) HAS BEEN VERIFIED FOR CODE COMPLIANCE USING INFORMATION FROM A CURRENT MIAMI-DADE COUNTY NOA, WHICH CORRESPONDS TO A LARGER SHELTER SIZE IN ACCORDANCE WITH THE 2017 (6th EDITION) AND 2020 (7th EDITION) OF THE FLORIDA BUILDING CODE.
DESIGN WIND LOADS HAVE BEEN DETERMINED IN ACCORDANCE WITH SECTION 1620 OF THE ABOVE MENTIONED CODE, FOR A BASIC WIND SPEED OF 175 M.P.H. AND IN ACCORDANCE WITH ASCE 7-10 (FBC 2017) & ASCE 7-16 (FBC 2020) STANDARD.
TESTING FOR WIND CAPACITY HAS BEEN PERFORMED IN ACCORDANCE OF TAS-202 AND AS PER ASTM E-330 STANDARD, PER FENESTRATION TESTING LAB REPORTS # 3867, 3795, 3891, 3901 AND 3925. THIS STRUCTURE SHALL ONLY BE INSTALLED WHERE A.S.D. DESIGN WIND LOADS DO NOT EXCEED THE MAXIMUM VALUES INDICATED BELOW.
MAXIMUM A.S.D. DESIGN LOADS ARE:
DEAD LOADS ON STRUCTURAL ROOF: 5.0 P.S.F.
LIVE LOADS ON STRUCTURAL ROOF: 30 P.S.F.
MAX. A.S.D. DESIGN PRESSURE RATING FOR WIND:
- ON STRUCTURAL ROOF: +80, -80 P.S.F. (S.F.=2.00)
- ON REAR GLASS WALL: +50, -61 P.S.F. (S.F.=1.50)

2.- ALL STEEL POSTS AND PLATES TO BE MADE OF AISI 304 SERIES WITH A MINIMUM YIELD STRENGTH OF 42.0 ksi.

3.- ALL ALUMINUM EXTRUSIONS SHALL BE MADE OF A MINIMUM ALUMINUM ASSOCIATION ALLOY AND TEMPER CORRESPONDING TO 6063-T6.

4. ALL ALUMINUM EXTRUSIONS IN CONTACT WITH DISSIMILAR MATERIALS SHALL COMPLY WITH SECTION III-6 OF THE 2015 ALUMINUM DESIGN MANUAL.

5. BENCH MATERIAL SHALL BE ASTM A-1011 HOT ROLLED STEEL, W/ A MINIMUM YIELD STRENGTH OF 40.0 ksi , PAINTED AS PER FEDERAL SPECIFICATIONS CORRESPONDING TO RED OXIDE PAINT OR EQUAL. MATERIAL TO BE COATED WITH DENFLEX PX-12412 PVC PLASTISOL COATING, 0.125" THICK, AS MANUFACTURED BY POLYONE, CHICAGO, ILLINOIS W/ 10.4 Lb/Gallon DENSITY, 2300 psi TENSILE STRENGTH (ASTM D-412), 419 ppi TEAR STRENGTH (ASTM D-624).
COATING WAS EXPOSED FOR 1000 hrs. IN A QUV ULTRAVIOLET CHAMBER, RESULTING ON SOME LOSS OF GLOSS BUT NO PHYSICAL PROPERTY DEGRADATION.
COATING SHALL MAINTAIN A COMFORTABLE TEMPERATURE OF BENCH'S SURFACE UNDER EXTREME WEATHER CONDITIONS (HOT OR COLD).
THIS ENGINEER IS NOT RESPONSIBLE FOR THE THERMAL PERFORMANCE OF THIS COATING, WHICH SHALL BE GUARANTEED BY THE COATING MANUFACTURER.
MAXIMUM BENCH CAPACITY IS 640 Lbs.

6.- ALL MACHINE SCREWS & BOLTS TO BE AISI 304 OR 316 SERIES STAINLESS STEEL. MINIMUM SHEAR STRENGTH SHALL BE 60.0 ksi. MINIMUM TENSILE STRENGTH SHALL BE 90.0 ksi. AS PER ASTM A-276 STANDARD. ALL SHEET METAL SCREWS TO BE STAINLESS STEEL 304 OR 316 AISI SERIES OR CORROSION RESISTANT COATED CARBON STEEL AS PER DIN 50018 WITH 50 ksi YIELD POINT AND 90 ksi TENSILE STRENGTH & SHALL COMPLY W/ FLORIDA BUILDING CODE SECTION 2411.3.3.4.

7.- ALL RIVETS TO BE STAINLESS STEEL WITH A MINIMUM OF 550 LB. SHEAR STRENGTH AND 700 LB. MINIMUM TENSILE STRENGTH.

8.- ALL WELDING OF STAINLESS STEEL MEMBERS SHALL BE PERFORMED IN ACCORDANCE WITH THE AMERICAN WELDING SOCIETY AWS D1.6 REGULATIONS. ELECTRODES SHALL BE MADE OF STAINLESS STEEL WITH A MINIMUM TENSILE STRENGTH OF 80.0 ksi (A.W.S. CLASSIFICATION E-308, E309 OR EQUAL. ALL WELDING OF ALUMINUM MEMBERS TO CONFORM WITH THE AMERICAN WELDING SOCIETY A.W.S. D.1.2 REGULATIONS. USE E-5556 OR 5356 ELECTRODES. USE CERTIFIED WELDERS.

9.- STRUCTURAL INSULATED ROOF PANEL IS A 3" THICK 1LB/FT^3 DENSITY EXPANDED POLYSTYRENE AS MANUFACTURED BY DYPLAST PRODUCTS LLC., W/ MIAMI DADE COUNTY PRODUCT APPROVED, WITH 0.035" THICK. (STUCCO EMBOSSED) 3003-H154, ALUMINUM SKIN (W/ A MINIMUM YIELD STRENGTH OF 28.00 ksi) TOP AND BOTTOM AND ADHERED TO POLYSTYRENE TO SKIN WITH MOR-AD M-464 URETHANE PREPOLYMER SOLUTION, PRODUCED BY MORTON INTERNATIONAL, INC. CHICAGO, ILLINOIS 60606-1598.

10.- GLASS AT REAR WALL OF BUS SHELTER SHALL BE 10mm THICK, TEMPERED AND SHALL COMPLY WITH 16CFR-1201.

11.- ANCHORS USED TO CONNECT POST'S BASE PLATES TO CONCRETE FOUNDATION SHALL BE EITHER OF THE FOLLOWING TYPES:

(a.) 5/8" DIAMETER GALVANIZED STEEL ANCHOR BOLTS, WITH STRAIGHT SHAFT, HEAD AND NUT. TO COMPLY WITH ASTM F1554, GALVANIZED TO ASTM A-153 WITH A MINIMUM YIELD STRENGTH OF 36ksi, AND TO PENETRATE A MINIMUM OF 8" IN TO THE EPOXY TO THE CONCRETE FOUNDATION.
MINIMUM A.S.D. TENSION LOAD CAPACITY: 6200 LB.
MINIMUM A.S.D. SHEAR LOAD CAPACITY: 3100 LB.
ANCHORS SHALL BE INSTALLED STRICTLY FOLLOWING THE SPECIFICATIONS OF THE ANCHOR MANUFACTURER AND THE DETAILS SHOWN ON THIS PRODUCT APPROVAL DOCUMENT.

12.- ALL CONCRETE TO DEVELOP A 28 DAY MINIMUM COMPRESSIVE STRENGTH f'c OF 3000 psi. ALL REBARS TO BE ASTM A-615 DEFORMED BARS. ALL CONCRETE CONSTRUCTION TO COMPLY WITH ACI 318-14 BUILDING CODE REQUIREMENTS FOR STRUCTURAL CONCRETE.

13.- REQUIRED FRAMING FOR INSTALLATION OF SHELTER WITHIN EXPOSURES C OR D AS DEFINED BY ASCE 7-10 (FBC 2017) & ASCE 7-16 (FBC 2020) STANDARD SHALL BE PROVIDED BASED ON SCHEDULE ON SHEET 4 OF 15 OF THIS DRAWING.

(II) MIAMI BUS SHELTER SLIM VERSION W/O OPPI PAL-LI SOLAR DISPLAY PANEL

1.- ALL MECHANICAL DETAILS AND SPECIFICATIONS, AS APPLICABLE, ARE NOT PART OF THIS DRAWING. THEY SHALL BE PREPARED A FLORIDA REGISTERED ENGINEER OR ARCHITECT AND SHALL BE REVIEWED BY THE CORRESPONDING BUILDING DEPARTMENT IN ORDER TO ISSUE A PERMIT FOR CONSTRUCTION.

2.- ALL ZONING DETAILS AND SPECIFICATIONS NEEDED FOR THE LOCATION, USE AND CONSTRUCTION OF BUS SHELTER SLIM VERSION IS NOT PART OF THIS DRAWING AND SHALL BE SUBMITTED SEPARATELY TO THE CORRESPONDING ZONING DEPARTMENT IN ORDER TO ISSUE A PERMIT FOR CONSTRUCTION.

3.- MINIMUM SOIL BEARING CAPACITY SHALL BE 2000 P.S.F.

4.- SHELTER'S DIMENSIONS HAVE BEEN PROVIDED TO THIS OFFICE BY MIAMI DADE COUNTY TRANSIT DEPARTMENT AND THEY NOT HAVE BEEN ESTABLISHED BY THIS OFFICE.

5.- (a.) THIS DRAWING PREPARED BY THIS ENGINEER IS GENERIC AND DOES NOT PROVIDE INFORMATION FOR A SITE SPECIFIC PROJECT; i.e. WHERE THE SITE CONDITIONS DEVIATE FROM THE DRAWING.

(b.) CONTRACTOR TO BE RESPONSIBLE FOR THE SELECTION, PURCHASE AND INSTALLATION INCLUDING LIFE SAFETY OF THIS PRODUCT BASED ON THIS DRAWING PROVIDED HE/SHE DOES NOT DEVIATE FROM THE CONDITIONS DETAILED ON THIS DOCUMENT. CONSTRUCTION SAFETY AT SITE IS THE CONTRACTOR'S RESPONSIBILITY.

(c.) THIS DRAWING WILL BE CONSIDERED INVALID IF ALTERED BY ANY MEANS.

(d.) SITE SPECIFIC PROJECTS SHALL BE PREPARED BY A FLORIDA REGISTERED ENGINEER OR ARCHITECT WHICH WILL BECOME THE ENGINEER OF RECORD (E.O.R.) FOR THE PROJECT AND WHO WILL BE RESPONSIBLE FOR THE PROPER USE OF THE DRAWING. ENGINEER OF RECORD, ACTING AS A DELEGATED ENGINEER TO THIS ENGINEER SHALL SUBMIT TO THIS LATTER THE SITE SPECIFIC DRAWINGS FOR REVIEW.

(e.) ORIGINAL P.A.D. SHALL BEAR THE DATE AND ORIGINAL SEAL AND SIGNATURE OF THE PROFESSIONAL ENGINEER OF RECORD THAT PREPARED IT.

6.- FINISH COLOR FOR BUS SHELTER SLIM VERSION IS NOT PART OF THIS DRAWING, BUT SHALL BE DEFINED AS PER AGREEMENT BETWEEN MANUFACTURER AND OWNER OF BUS SHELTER.

7. THIS DRAWING IS A GENERIC STRUCTURAL DRAWING AND DOES NOT CONSTITUTE AT ALL A SHOP DRAWING FOR THE DIRECT MANUFACTURING OF THIS BUS SHELTER.

8. LABELING OF THIS PRODUCT SHALL COMPLY W/ MIAMI DADE COUNTY REGULATIONS.

WALTER A. TILLIT JR. LICENSE No. 44167 STATE OF FLORIDA PROFESSIONAL ENGINEER

PRODUCT REVISED
as complying with the Florida Building Code
Acceptance No. 20-0922.02
Expiration Date 10/22/2025
By Miami Dade Product Control
MIAMI DADE COUNTY

9/8/2020
P.E. SEAL/SIGNATURE/DATE

TILTECO INC.
TILLIT TESTING & ENGINEERING COMPANY
6355 N.W. 36th. St., Ste. 305,
VIRGINIA GARDENS, Fl. 33166
Phone:(305)871-1530. Fax:(305)871-1531
e-mail: tilteco@aol.com
CA-0006719
WALTER A. TILLIT Jr., P. E.
FLORIDA Lic. # 44167

MIAMI BUS SHELTER SLIM VERSION W/O OPPI PAL-LI SOLAR DISPLAY PANEL

OUTFRONT MEDIA, INC.
8530 NW 23rd Street
Doral, FL 33122
Phone (786) 646-9136

DRAWN BY: M.P.

9/3/2020
DATE:

GENERAL NOTES

No.	Date:	Description: Revisions
1	9/3/2020	OLD 15-120

20-033
DRAWING No.

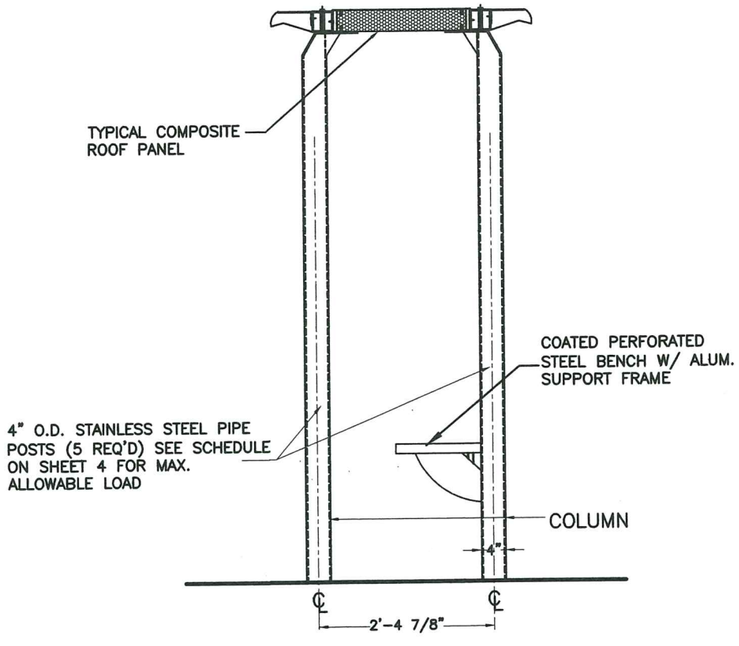

RIGHT SIDE ELEVATION

SCALE:1/2"=1'-0"

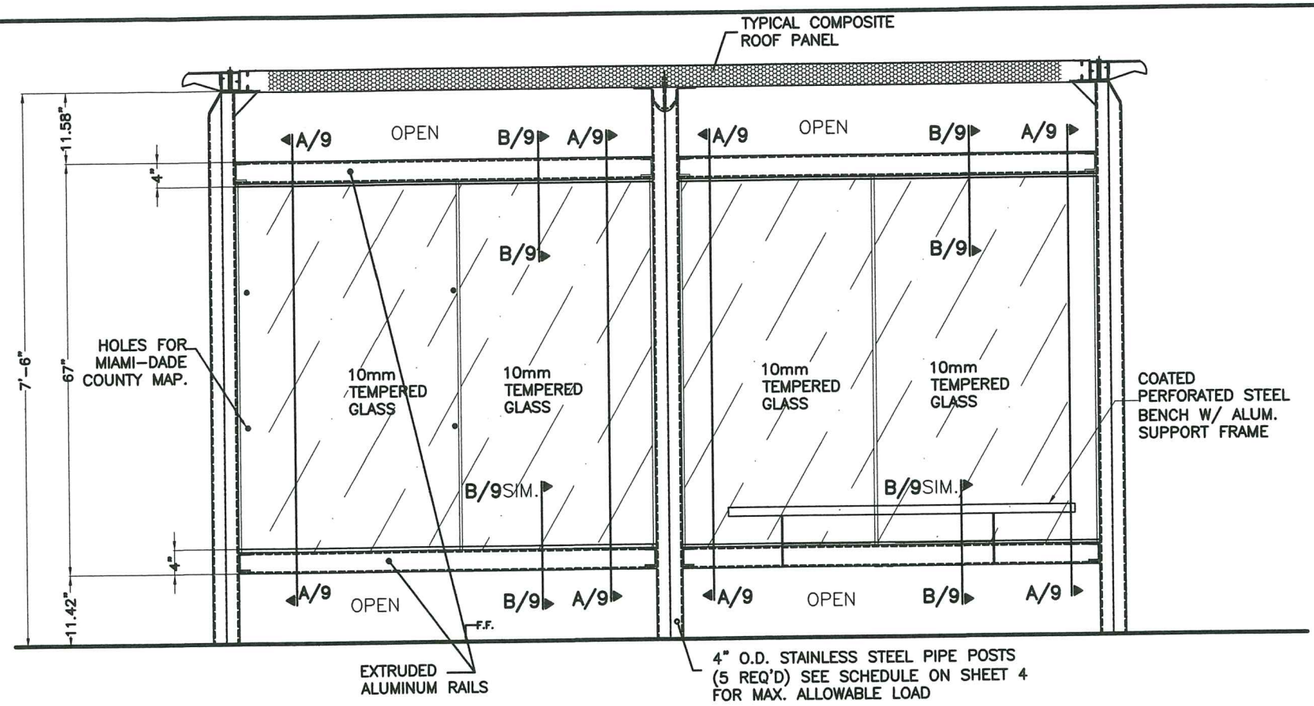

REAR WALL ELEVATION

SCALE:1/2"=1'-0"

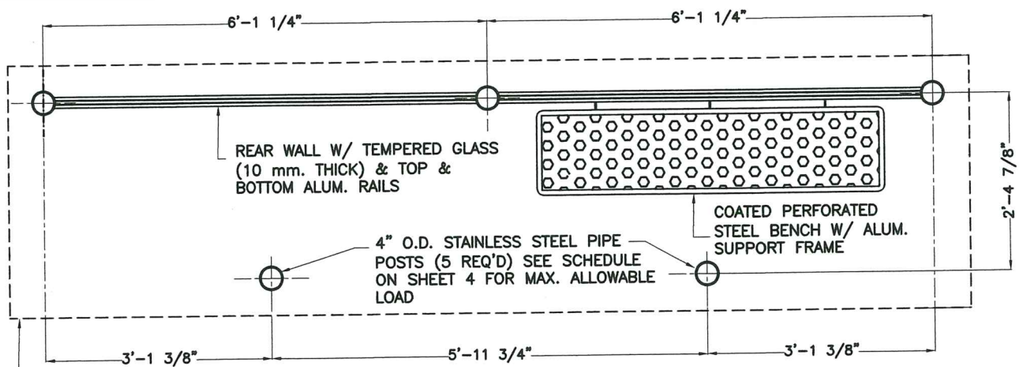

FLOOR PLAN

SCALE:1/2"=1'-0"

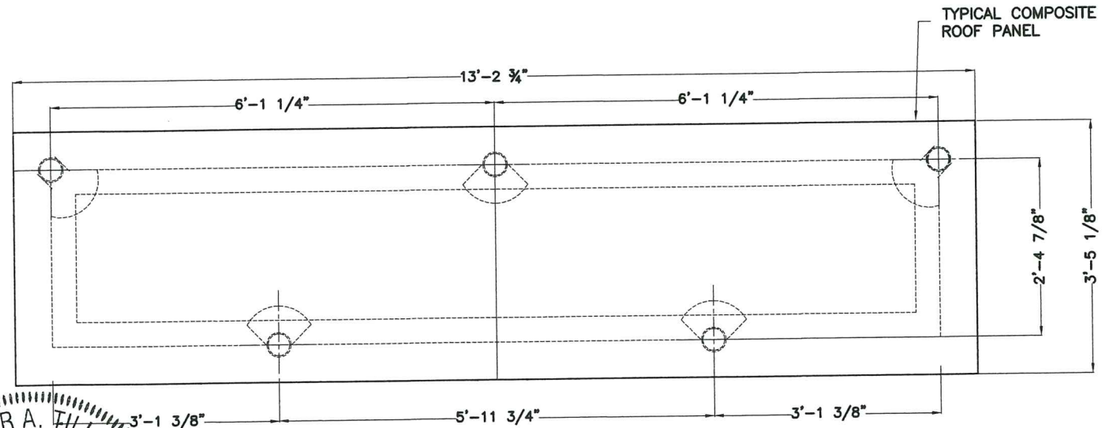

ROOF PLAN

SCALE:1/2"=1'-0"

WALTER A. TILLIT JR. LICENSE No. 44167 STATE OF FLORIDA PROFESSIONAL ENGINEER

PRODUCT REVISED as complying with the Florida Building Code Acceptance No 20-0922.02 Expiration Date 10/22/2025 By Miami Dade Product Control

MIAMI DADE COUNTY

P.E. SEAL/SIGNATURE/DATE

TILTECO INC.
TILLIT TESTING & ENGINEERING COMPANY
6355 N.W. 36th. St., Ste. 305,
VIRGINIA GARDENS, Fl. 33166
Phone:(305)871-1530. Fax:(305)871-1531
e-mail: tilteco@aol.com
CA-0006719
WALTER A. TILLIT Jr., P. E.
FLORIDA Lic. # 44167

MIAMI BUS SHELTER SLIM VERSION W/O OPPI PAL-LI SOLAR DISPLAY PANEL

PLANS & ELEVATIONS

OUTFRONT MEDIA, INC.
8530 NW 23rd Street
Doral, FL 33122
Phone (786) 646-9136

No.	Date:	Description: Revisions
1	9/3/2020	OLD 15-120

DRAWN BY: M.P.

9/3/2020 DATE:

20-033 DRAWING No.

SHEET 2 OF 15

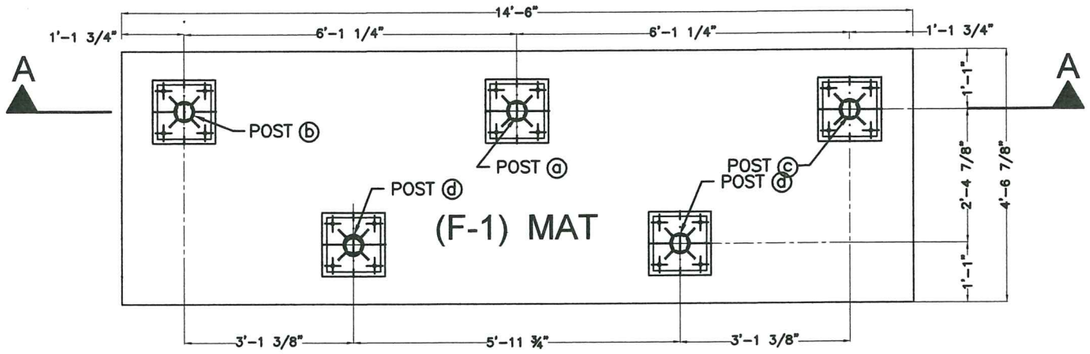

MAT FOUNDATION PLAN BUS SHELTER

(f'c = 3ksi CONCRETE)
SCALE: 3/8" = 1'-0"

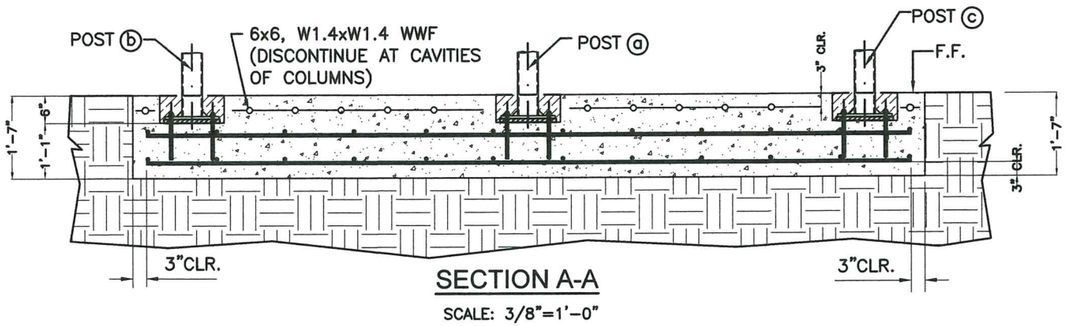

SECTION A-A

SCALE: 3/8"=1'-0"

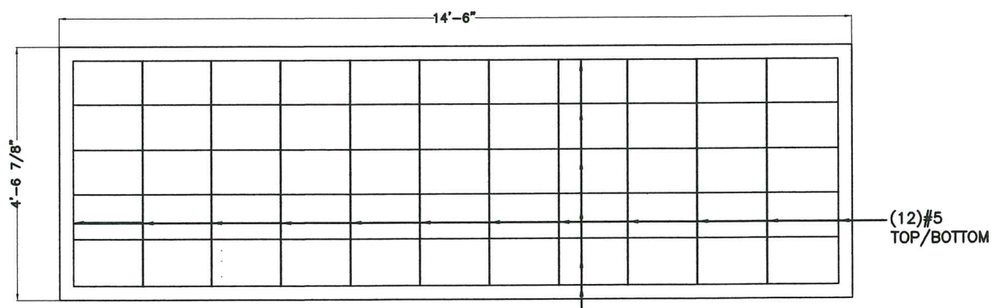

DETAIL 1

TOP / BOTTOM REINFORCEMENT
FOR 19" THICK CONCRETE MAT.
(TOP WWF NOT SHOWN FOR CLARITY)

FOUNDATION NOTES:

1.–THE ELEVATION OF CAVITIES LEFT FOR POST'S BASE PLATES (SEE DETAILS) SHALL BE A MINIMUM OF 6" BELOW THE TOP OF THE BUS SHELTER FINISHED FLOOR SLAB.

2.–REINFORCEMENT STEEL SHOULD BE AS INDICATED ON FOOTING SCHEDULE:

3.–SEE GENERAL NOTES ON SHEET 1 OF 15 FOR ADDITIONAL SPECIFICATIONS & NOTES.

4.–SEE SHEETS 6, 7 & 8 FOR POST/BASE, PLATE SPECIFICATIONS FOR BUS SHELTER.

FOOTING SCHEDULE

NUMBER	DIMENSION (WxL)	DEPTH	STEEL REINFORCEMENT
F-1	4'–6 7/8"x14'–6"	1'–7"	(12) #5 @ 16" MAX. O.C. @ 14'–6" DIRECTION, TOP / BOTTOM. & (6) #5 @ 11" MAX. O.C. 4'–6 7/8" DIRECTION, TOP / BOTTOM.

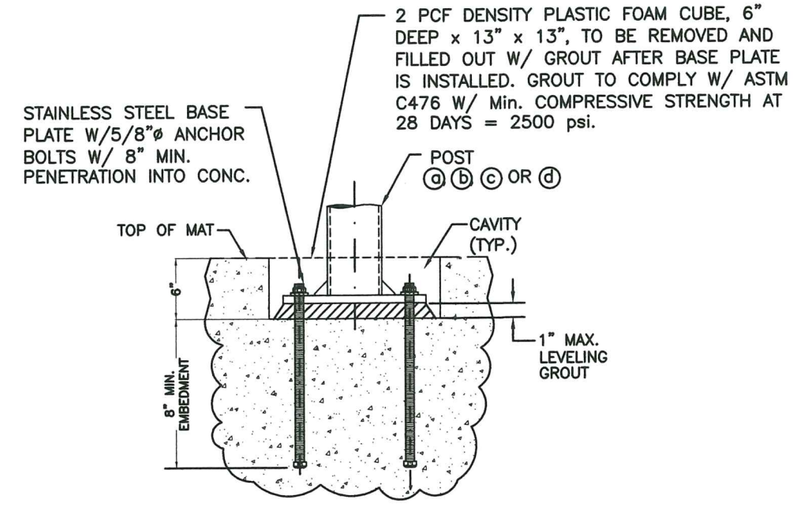

TYPICAL POST CONNECTION

PRODUCT REVISED
as complying with the Florida Building Code
Acceptance No 20-0922.02
Expiration Date 10/22/2025
By Miami Dade Product Control
MIAMI DADE COUNTY

WALTER A. TILLIT JR. LICENSE No. 44167 STATE OF FLORIDA PROFESSIONAL ENGINEER
P.E. SEAL/SIGNATURE/DATE

TILTECO INC.
TILLIT TESTING & ENGINEERING COMPANY
6355 N.W. 36th. St., Ste. 305,
VIRGINIA GARDENS, Fl. 33166
Phone:(305)871-1530. Fax:(305)871-1531
e-mail: tilteco@aol.com
CA-0006719
WALTER A. TILLIT Jr., P. E.
FLORIDA Lic. # 44167

MIAMI BUS SHELTER
SLIM VERSION
W/O OPPI PAL-LI
SOLAR DISPLAY
PANEL

OUTFRONT MEDIA, INC.
8530 NW 23rd Street
Doral, FL 33122
Phone (786) 646-9136

DRAWN BY: M.P.

9/3/2020
DATE:

FOUNDATION PLAN & SCHEDULE

No.	Date:	Description: Revisions
1	9/3/2020	OLD 15–120

20-033
DRAWING No.

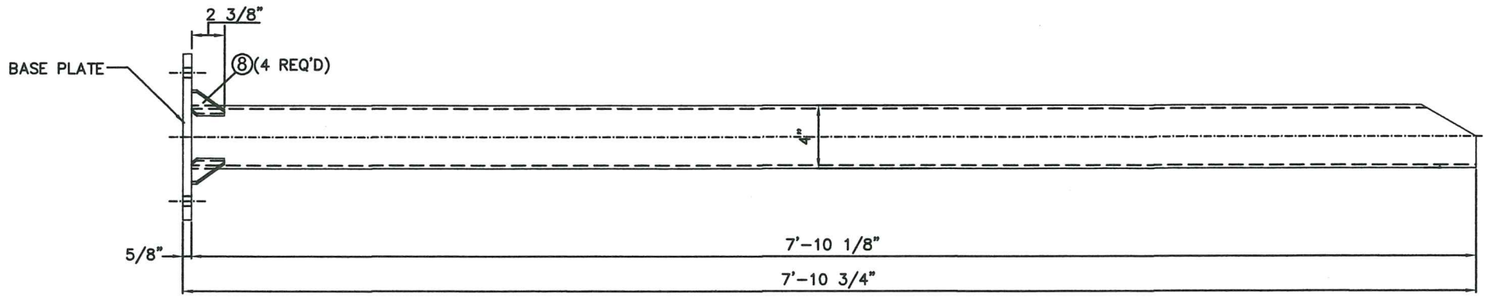

①POST TYPE A

SCALE: 1.15" = 1'-0"
VALID FOR POSTS ⓐ AND ⓓ (SEE SHEETS 6 & 8)
4" O.D. PIPE, STAINLESS STEEL
SEE SCHEDULE FOR Max. ALLOWABLE LOAD

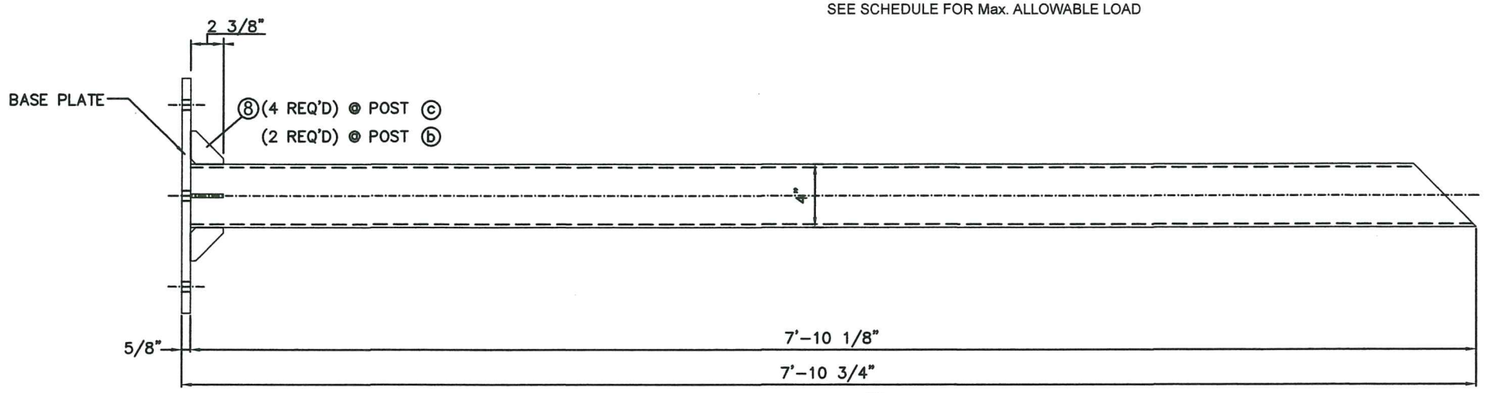

②POST TYPE B

SCALE: 1.15" = 1'-0"
VALID FOR POSTS ⓑ AND ⓒ (SEE SHEET 7)
4" O.D. PIPE, STAINLESS STEEL
SEE SCHEDULE FOR Max. ALLOWABLE LOAD

POST SCHEDULE

REQ'D PIPE SIZE & TYPE BASED ON EXPOSURES C OR D	MAX. A.S.D. DESIGN PRESSURE RATING (psf)	
	ROOF	REAR WALL
4" O.D. SCHEDULE 40 FOR INSTALLATIONS ONLY WITHIN EXPOSURE C, BASED ON ASCE 7	± 72.0	+ 45.0, -55.0
4" O.D. SCHEDULE 80 FOR INSTALLATIONS WITHIN EXPOSURES C OR D , BASED ON ASCE 7	± 80.0	+ 50.0, -61.0

BUS SHELTER POST COMPONENTS

NOTE: SEE COMPONENT ⑧ ON SHEET 5

WALTER A. TILLIT JR. LICENSE No. 44167 STATE OF FLORIDA PROFESSIONAL ENGINEER

PRODUCT REVISED
as complying with the Florida Building Code
Acceptance No 20-0922.02
Expiration Date 10/22/2025
By Miami Dade Product Control

MIAMI DADE COUNTY

9/8/2020
P.E. SEAL/SIGNATURE/DATE

TILLECO INC.
TILLIT TESTING & ENGINEERING COMPANY
6355 N.W. 36th. St., Ste. 305,
VIRGINIA GARDENS, Fl. 33166
Phone:(305)871-1530. Fax:(305)871-1531
e-mail: tilteco@aol.com
CA-0006719
WALTER A. TILLIT Jr., P. E.
FLORIDA Lic. # 44167

MIAMI BUS SHELTER SLIM VERSION W/O OPPI PAL-LI SOLAR DISPLAY PANEL

OUTFRONT MEDIA, INC.
8530 NW 23rd Street
Doral, FL 33122
Phone (786) 646-9136

DRAWN BY: M.P.

9/3/2020
DATE:

POST ELEVATIONS

No.	Date:	Description: Revisions
1	9/3/2020	OLD 15–120

20-033
DRAWING No.

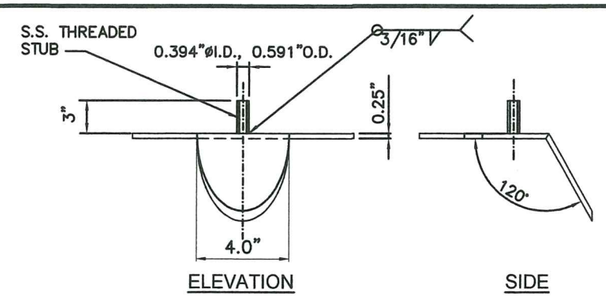

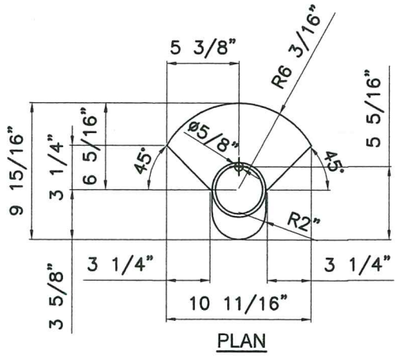

③ POST CAP PLATE TYPE A

VALID FOR POSTS (a) & (d)
REQUIRES:(3) PER UNIT
MATERIAL: STAINLESS STEEL, AISI 304
N.T.S.

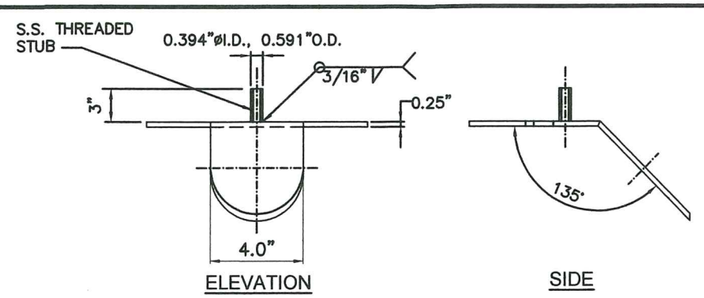

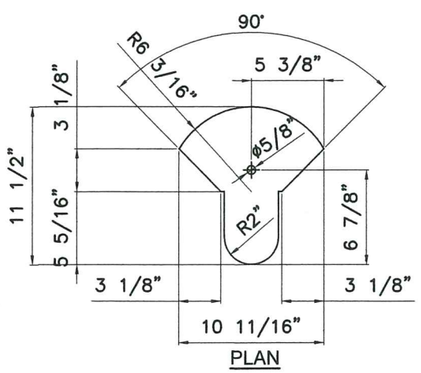

④ POST CAP PLATE TYPE B

VALID FOR POSTS (c)
REQUIRES:(1) PER UNIT
MATERIAL: STAINLESS STEEL, AISI 304
N.T.S.

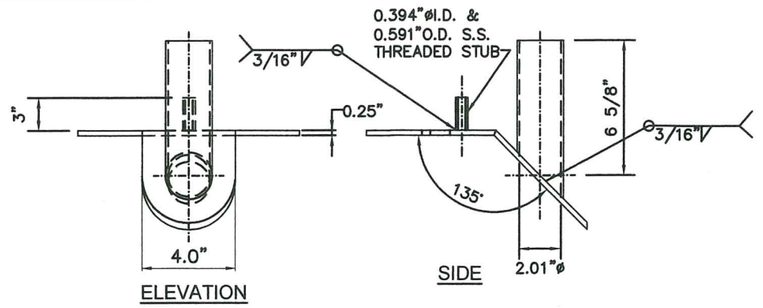

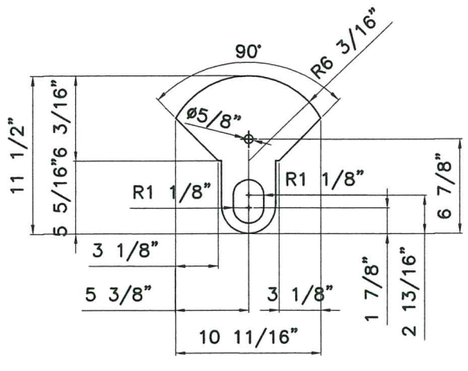

⑤ POST CAP PLATE TYPE C

VALID FOR POSTS (b)
REQUIRES:(1) PER UNIT
MATERIAL: STAINLESS STEEL, AISI 304
N.T.S.

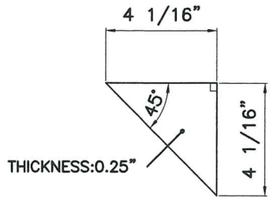

⑥ POST CAP PLATE GUSSET

VALID FOR POSTS (b) & (c)
REQUIRES:(2) PER UNIT
MATERIAL: STAINLESS STEEL, AISI 304
N.T.S.

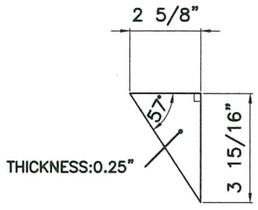

⑦ POST CAP PLATE GUSSET

VALID FOR POSTS (a) & (d)
REQUIRES:(3) PER UNIT
MATERIAL: STAINLESS STEEL, AISI 304
N.T.S.

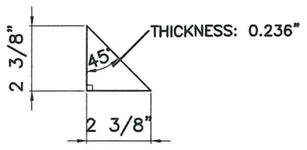

⑧ POST BASE PLATE GUSSET

REQUIRES:(20) PER UNIT
MATERIAL: STAINLESS STEEL, AISI 304
N.T.S.

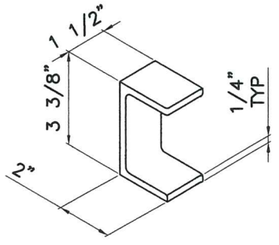

⑨ POST BRACKET FOR REAR WALL

REQUIRES:(2) PER POST
MATERIAL: STAINLESS STEEL, AISI 304
N.T.S.

BUS SHELTER POST COMPONENTS

PRODUCT REVISED
as complying with the Florida Building Code
Acceptance No. 20-0922.02
Expiration Date 10/22/2025
By Miami Dade Product Control
MIAMI DADE COUNTY

WALTER A. TILLIT JR. LICENSE No. 44167 STATE OF FLORIDA PROFESSIONAL ENGINEER
P.E. SEAL/SIGNATURE/DATE

TILTECO INC.
TILLIT TESTING & ENGINEERING COMPANY
6355 N.W. 36th. St., Ste. 305,
VIRGINIA GARDENS, Fl. 33166
Phone:(305)871-1530. Fax:(305)871-1531
e-mail: tilteco@aol.com
CA-0006719
WALTER A. TILLIT Jr., P. E.
FLORIDA Lic. # 44167

MIAMI BUS SHELTER SLIM VERSION W/O OPPI PAL-LI SOLAR DISPLAY PANEL

OUTFRONT MEDIA, INC.
8530 NW 23rd Street
Doral, FL 33122
Phone (786) 646-9136

POST COMPONENTS

No.	Date:	Description: Revisions
1	9/3/2020	OLD 15-120

DRAWN BY: M.P.
DATE: 9/3/2020
20-033 DRAWING No.
SHEET 5 OF 15

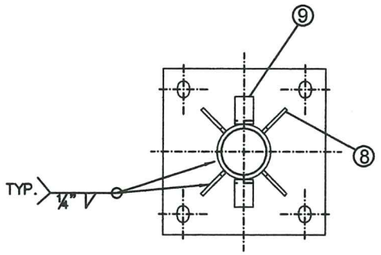

SECTION X-X

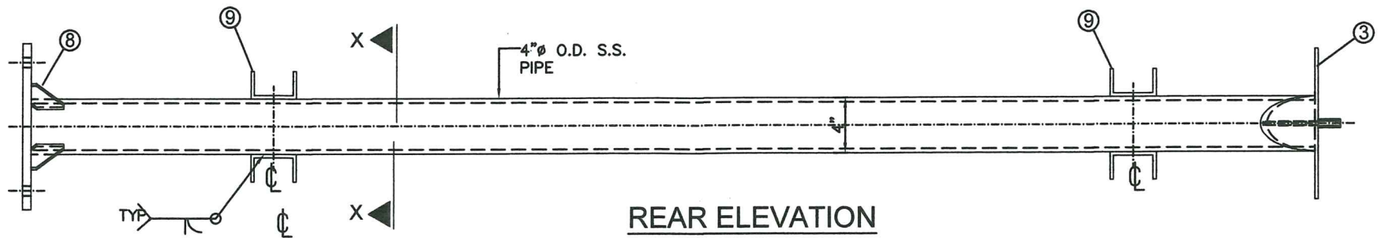

REAR ELEVATION

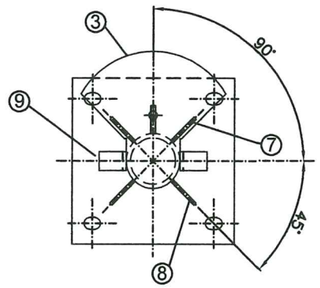

VIEW Y-Y

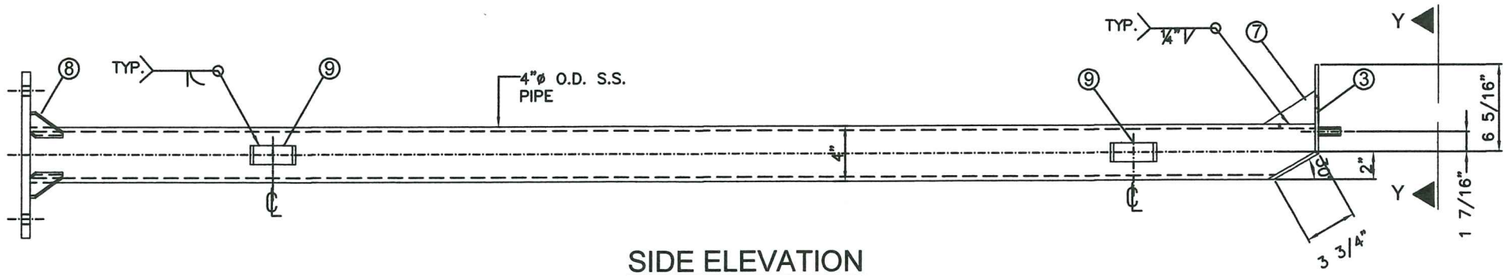

SIDE ELEVATION

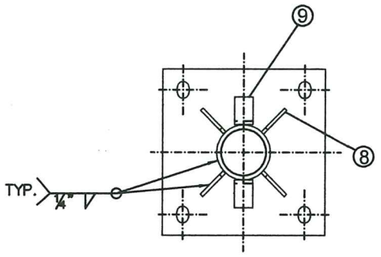

SECTION X-X

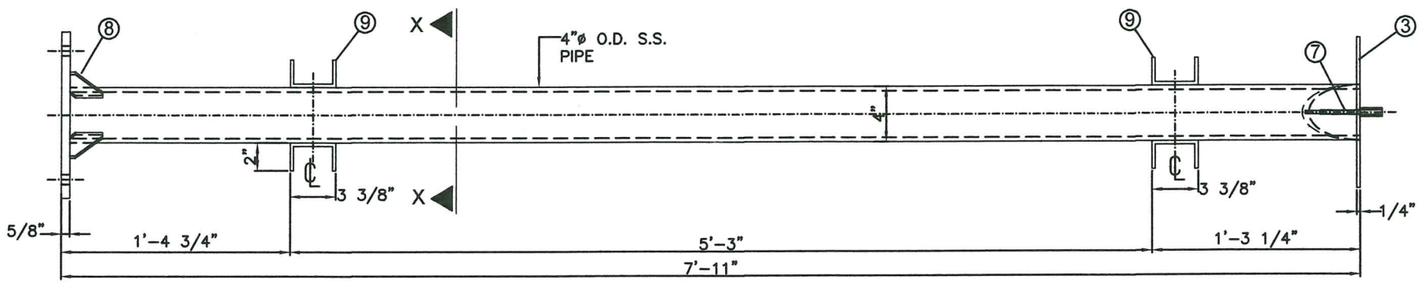

FRONT ELEVATION

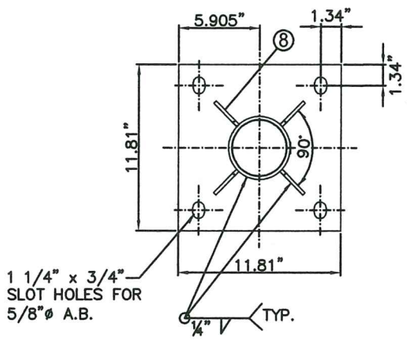

BASE PLATE

ⓐ REAR CENTER POST

SCALE: 1.15" = 1'–0"
REQUIRES: (1) PER UNIT

WALTER A. TILLIT JR. LICENSE No. 44167 STATE OF FLORIDA PROFESSIONAL ENGINEER

PRODUCT REVISED
as complying with the Florida
Building Code
Acceptance No 20-0922.02
Expiration Date 10/22/2025
By
Miami Dade Product Control

MIAMI DADE COUNTY

P.E. SEAL/SIGNATURE/DATE

TILTECO INC.
TILLIT TESTING & ENGINEERING COMPANY
6355 N.W. 36th. St., Ste. 305,
VIRGINIA GARDENS, Fl. 33166
Phone:(305)871-1530. Fax:(305)871-1531
e-mail: tilteco@aol.com
CA-0006719
WALTER A. TILLIT Jr., P. E.
FLORIDA Lic. # 44167

MIAMI BUS SHELTER SLIM VERSION W/O OPPI PAL–LI SOLAR DISPLAY PANEL

OUTFRONT MEDIA, INC.
8530 NW 23rd Street
Doral, FL 33122
Phone (786) 646-9136

DRAWN BY: M.P.

9/3/2020
DATE:

POST ELEVATIONS

No.	Date:	Description: Revisions
1	9/3/2020	OLD 15–120

20-033
DRAWING No.

SHEET 6 OF 15

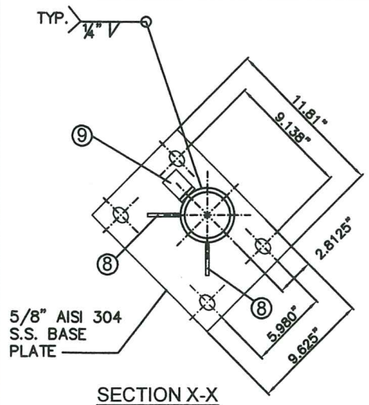

SECTION X-X

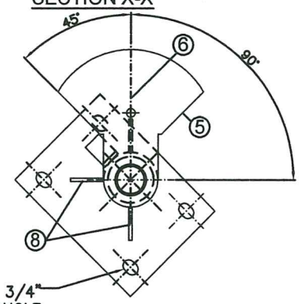

VIEW Y-Y

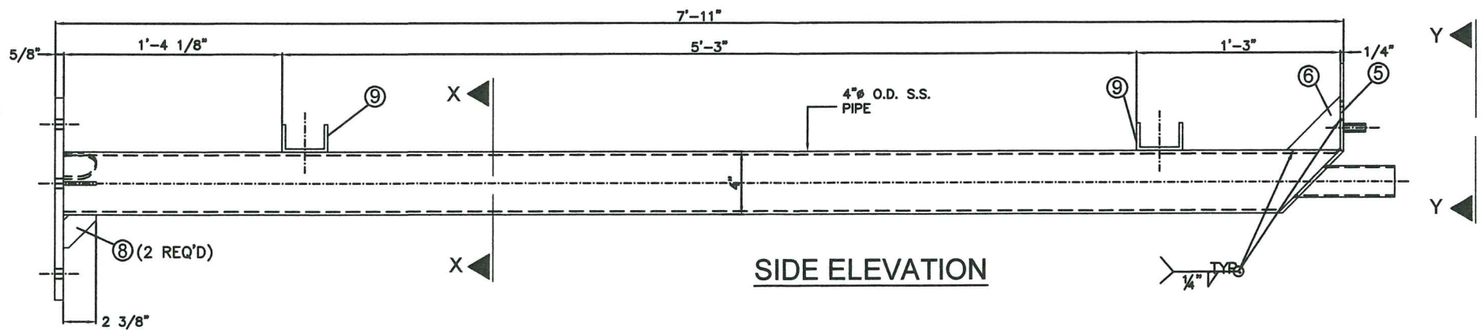

SIDE ELEVATION

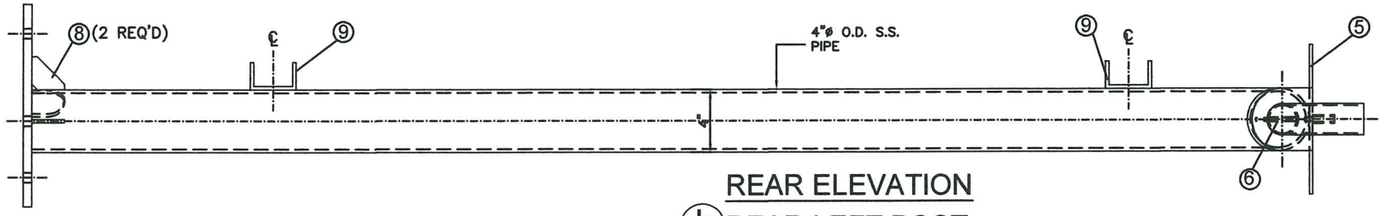

REAR ELEVATION

(b) REAR LEFT POST

REQUIRES: (1) PER UNIT

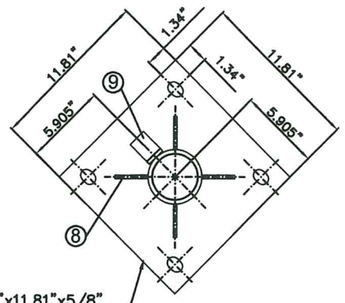

SECTION X-X

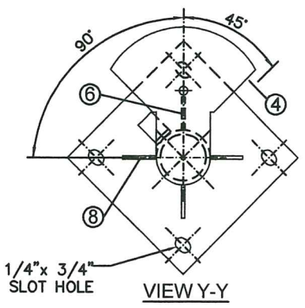

VIEW Y-Y

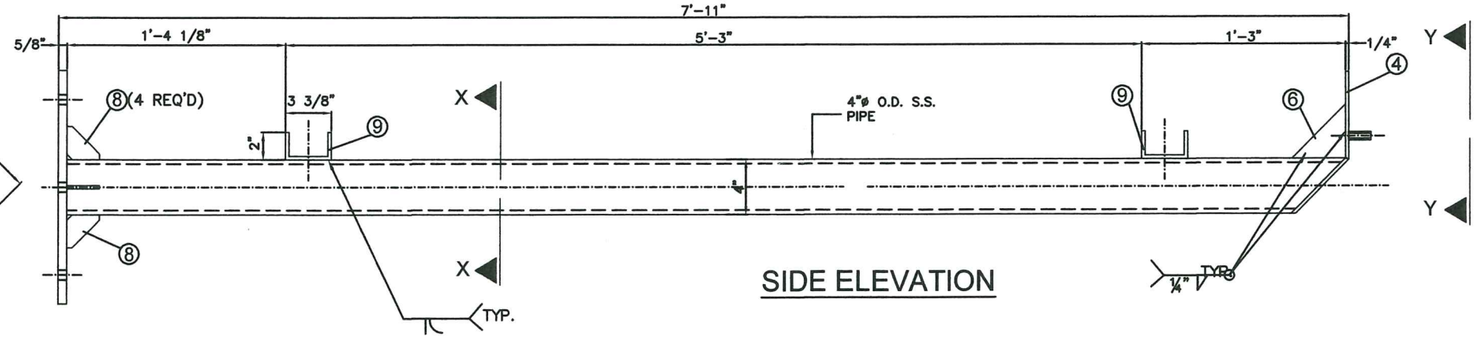

SIDE ELEVATION

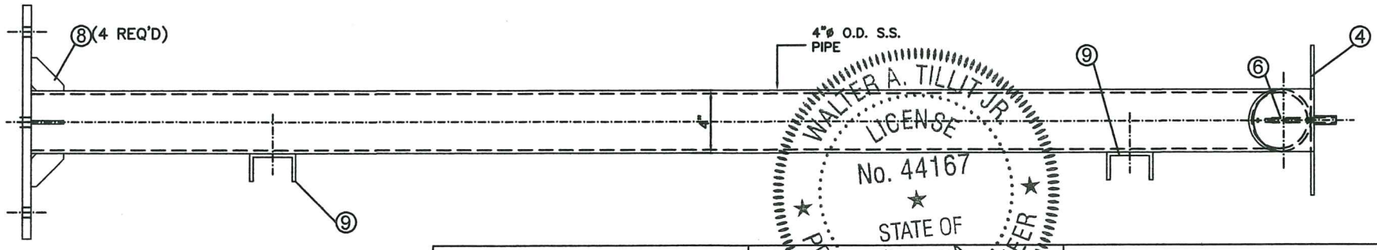

REAR ELEVATION

(c) REAR RIGHT POST

REQUIRES: (1) PER UNIT

PRODUCT REVISED as complying with the Florida Building Code
Acceptance No 20-0922.02
Expiration Date 10/22/2025
By Miami Dade Product Control

MIAMI DADE COUNTY

WALTER A. TILLIT JR. LICENSE No. 44167 STATE OF FLORIDA PROFESSIONAL ENGINEER
9/8/2020

P.E. SEAL/SIGNATURE/DATE

TILLECO INC.
TILLIT TESTING & ENGINEERING COMPANY
6355 N.W. 36th. St., Ste. 305,
VIRGINIA GARDENS, Fl. 33166
Phone:(305)871-1530. Fax:(305)871-1531
e-mail: tilteco@aol.com
CA-0006719
WALTER A. TILLIT Jr., P. E.
FLORIDA Lic. # 44167

MIAMI BUS SHELTER SLIM VERSION W/O OPPI PAL-LI SOLAR DISPLAY PANEL

OUTFRONT MEDIA, INC.
8530 NW 23rd Street
Doral, FL 33122
Phone (786) 646-9136

POST ELEVATIONS

No.	Date:	Description: Revisions
1	9/3/2020	OLD 15-120

DRAWN BY: M.P.

9/3/2020 DATE:

20-033 DRAWING No.

SHEET 7 OF 15

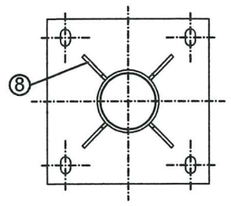

SECTION X-X

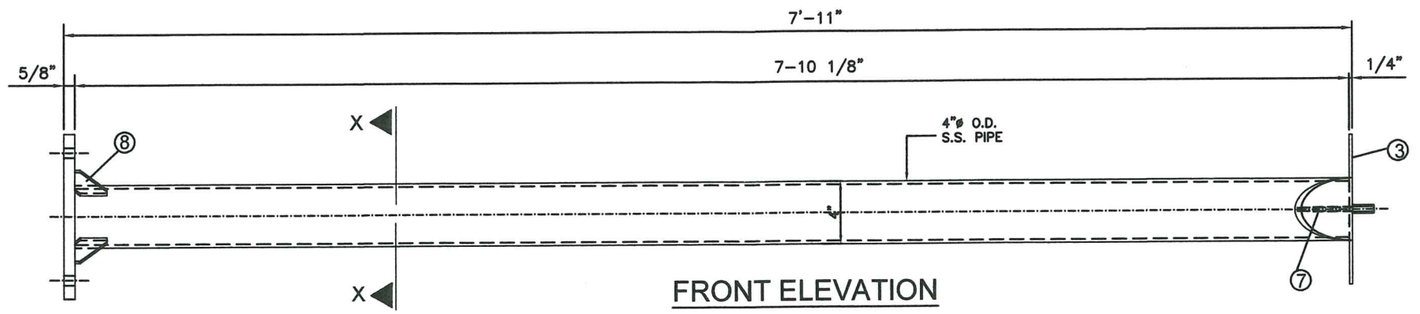

FRONT ELEVATION

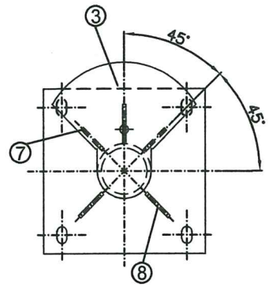

VIEW Y-Y

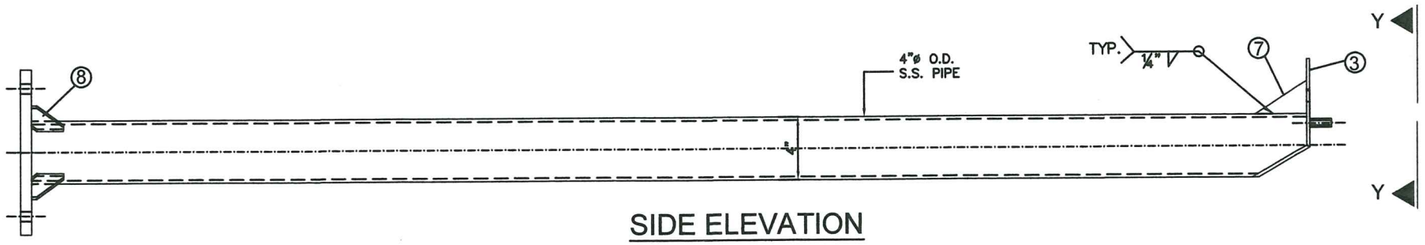

SIDE ELEVATION

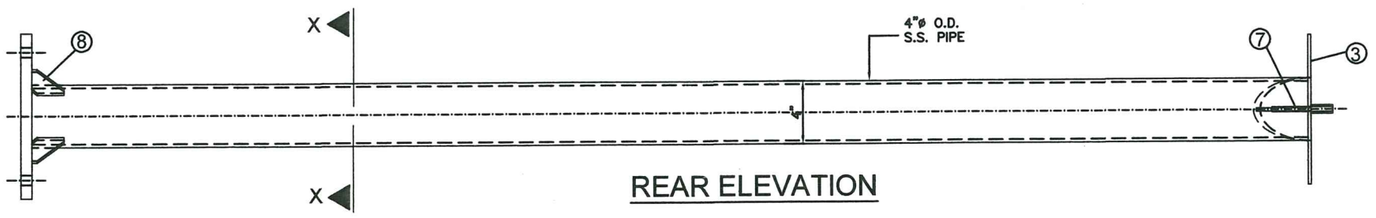

REAR ELEVATION

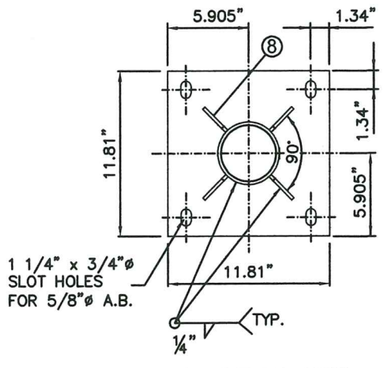

BASE PLATE

ⓓ FRONT POST

SCALE: 1.15" = 1'-0"
REQUIRES: (2) PER UNIT

WALTER A. TILLIT JR. LICENSE No. 44167 STATE OF FLORIDA PROFESSIONAL ENGINEER

PRODUCT REVISED
as complying with the Florida Building Code
Acceptance No 20-0922.02
Expiration Date 10/22/2025
By Miami Dade Product Control

MIAMI DADE COUNTY

P.E. SEAL/SIGNATURE/DATE

TILLECO INC.
TILLIT TESTING & ENGINEERING COMPANY
6355 N.W. 36th. St., Ste. 305,
VIRGINIA GARDENS, Fl. 33166
Phone:(305)871-1530. Fax:(305)871-1531
e-mail: tilteco@aol.com
CA-0006719
WALTER A. TILLIT Jr., P. E.
FLORIDA Lic. # 44167

MIAMI BUS SHELTER
SLIM VERSION
W/O OPPI PAL-LI
SOLAR DISPLAY PANEL

OUTFRONT MEDIA, INC.
8530 NW 23rd Street
Doral, FL 33122
Phone (786) 646-9136

DRAWN BY: M.P.

9/3/2020
DATE:

POST ELEVATIONS

No.	Date:	Description: Revisions
1	9/3/2020	OLD 15-120

20-033
DRAWING No.

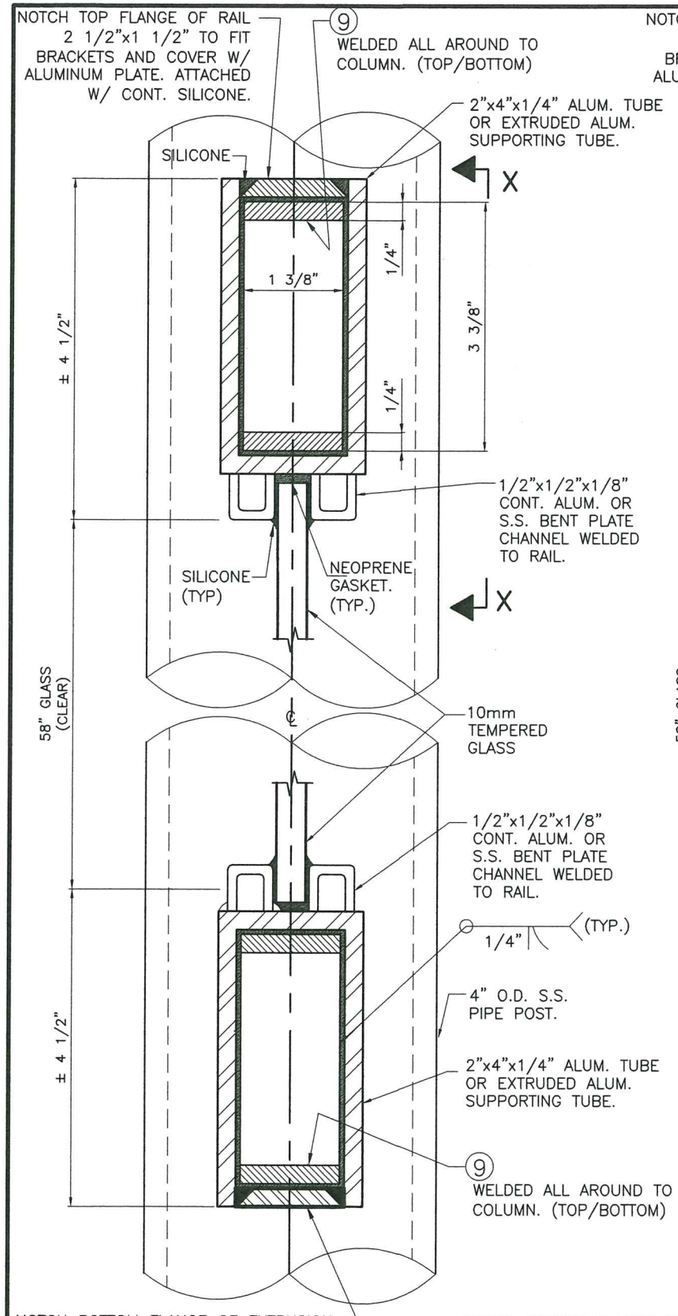

ALTERNATE # 1

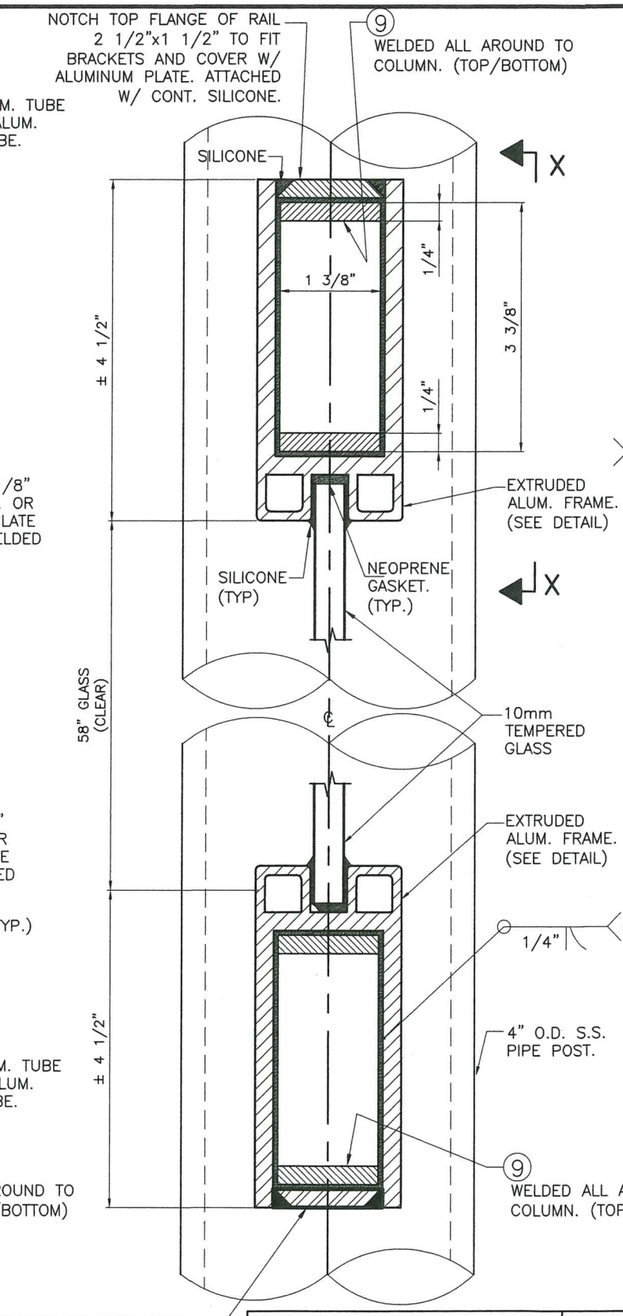

ALTERNATE # 2

SECTION A–A

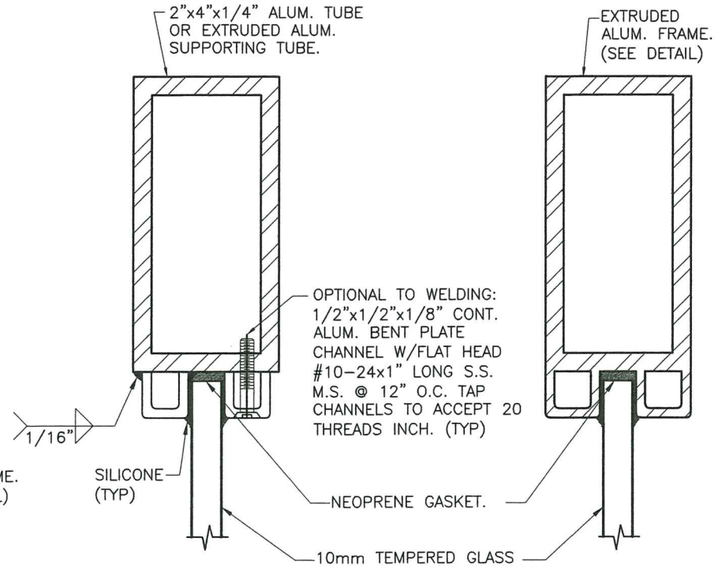

ALTERNATE # 1

ALTERNATE # 2

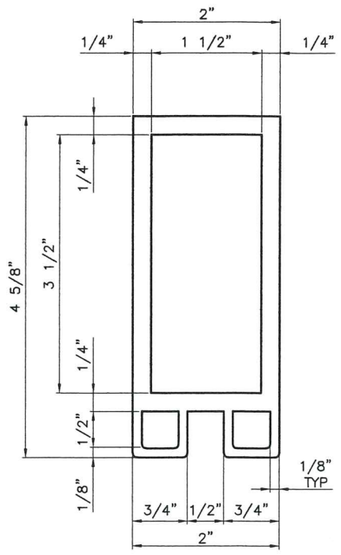

EXTRUDED ALUM. SUPPORTING TUBE DETAIL

SECTION B–B

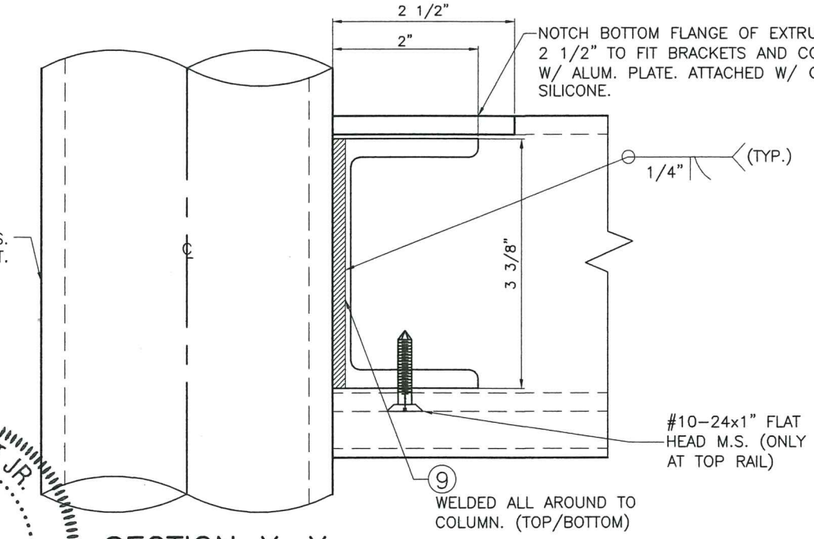

SECTION X–X

PRODUCT REVISED
as complying with the Florida Building Code
Acceptance No 20-0922.02
Expiration Date 10/22/2025
By Miami Dade Product Control

MIAMI DADE COUNTY

WALTER A. TILLIT JR. LICENSE No. 44167 STATE OF FLORIDA PROFESSIONAL ENGINEER

9/8/2020

P.E. SEAL/SIGNATURE/DATE

TILLIT TESTING & ENGINEERING COMPANY
6355 N.W. 36th. St., Ste. 305,
VIRGINIA GARDENS, Fl. 33166
Phone:(305)871-1530. Fax:(305)871-1531
e-mail: tilteco@aol.com
CA-0006719
WALTER A. TILLIT Jr., P. E.
FLORIDA Lic. # 44167

MIAMI BUS SHELTER SLIM VERSION W/O OPPI PAL–LI SOLAR DISPLAY PANEL

OUTFRONT MEDIA, INC.
8530 NW 23rd Street
Doral, FL 33122
Phone (786) 646-9136

DRAWN BY: M.P.

9/3/2020

DATE:

REAR WALL SECTIONS

No.	Date:	Description: Revisions
1	9/3/2020	OLD 15–120

20-033
DRAWING No.

SHEET 9 OF 15

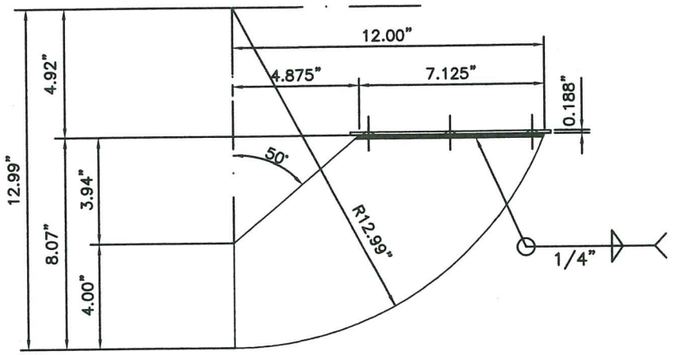

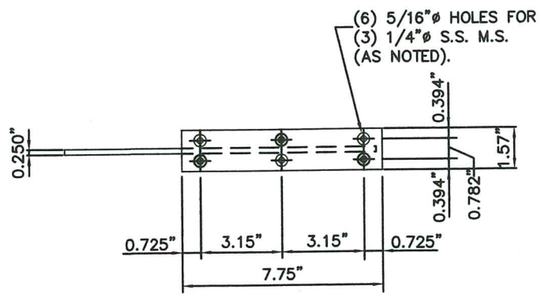

⑬ BENCH SUPPORT BRACKET

MATERIAL: 5052-H32 or 6063-T6
ALUM. ALLOY WELDED PLATES
REQUIRES: (3)PER UNIT

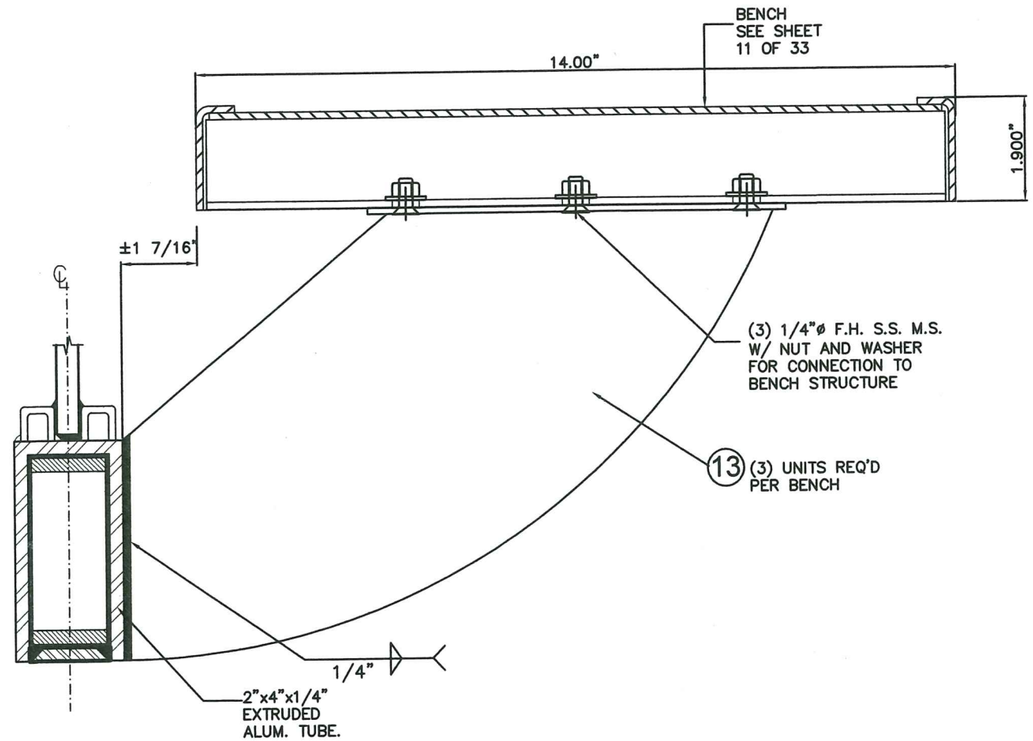

ASSEMBLY BENCH TO BOTTOM RAIL SECTION

PRODUCT REVISED
as complying with the Florida
Building Code
Acceptance No 20-0922.02
Expiration Date 10/22/2025
By
Miami Dade Product Control

MIAMI DADE COUNTY

WALTER A. TILLIT JR. LICENSE No. 44167 STATE OF FLORIDA PROFESSIONAL ENGINEER

P.E. SEAL/SIGNATURE/DATE

TILTECO INC.
TILLIT TESTING & ENGINEERING COMPANY
6355 N.W. 36th. St., Ste. 305,
VIRGINIA GARDENS, Fl. 33166
Phone:(305)871-1530. Fax:(305)871-1531
e-mail: tilteco@aol.com
CA-0006719
WALTER A. TILLIT Jr., P. E.
FLORIDA Lic. # 44167

MIAMI BUS SHELTER
SLIM VERSION
W/O OPPI PAL-LI
SOLAR DISPLAY
PANEL

BEAM SUPPORT COMPONENTS

OUTFRONT MEDIA, INC.
8530 NW 23rd Street
Doral, FL 33122
Phone (786) 646-9136

No.	Date:	Description: Revisions
1	9/3/2020	OLD 15-120

DRAWN BY: M.P.

9/3/2020
DATE:

20-033
DRAWING No.

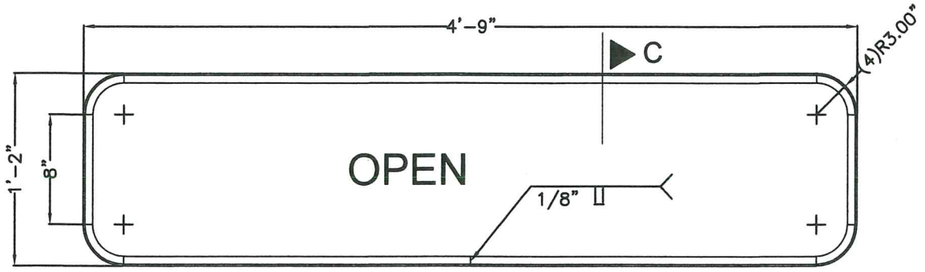

OUTER RAIL(PROTO-MBENCH-103)

0.125" THICK HOT ROLLED STEEL COIL ASTM A 1011
NTS.

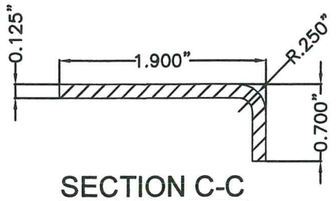

SECTION C-C
(TYP)
NTS.

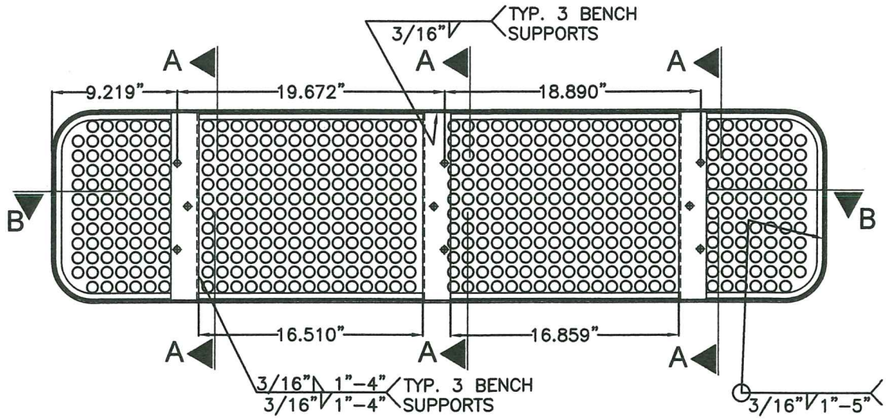

BENCH ASSEMBLY
NTS.

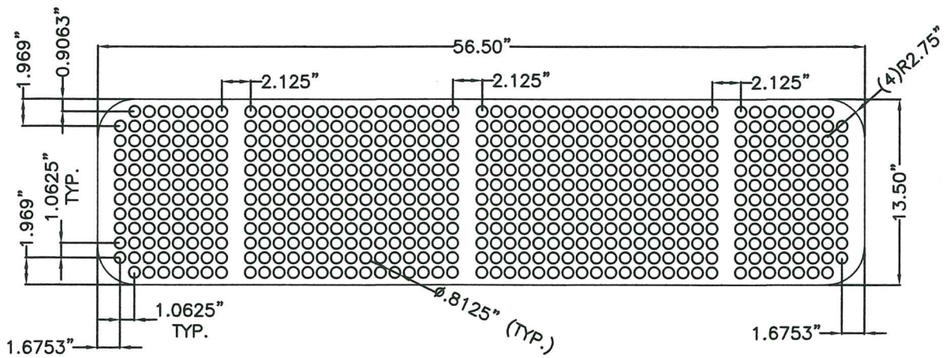

THOMAS PERF. PIECE(PROTO-MBENCH-101B)

0.135" THICK HOT ROLLED STEEL ASTM A-1011 CS, TYPE B
NTS.

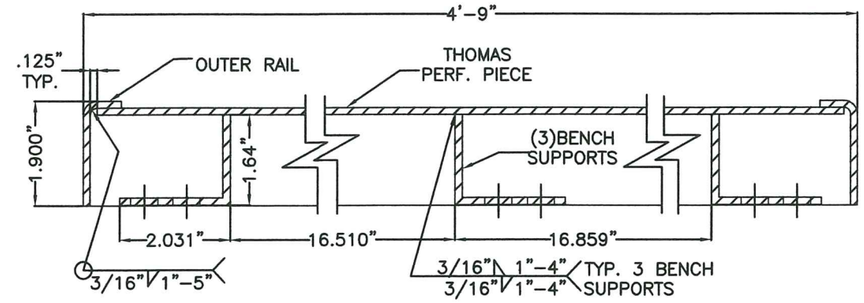

SECTION B-B
NTS.

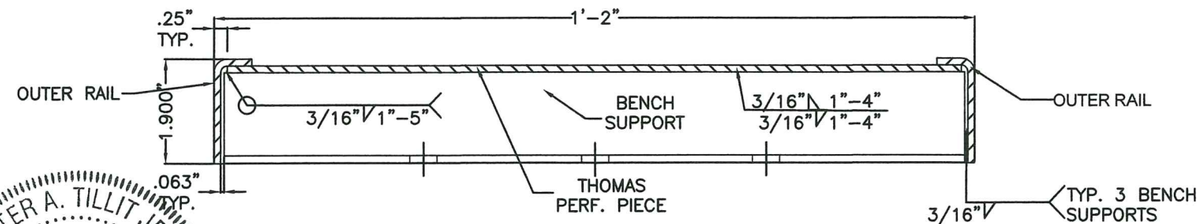

SECTION A-A
NTS.

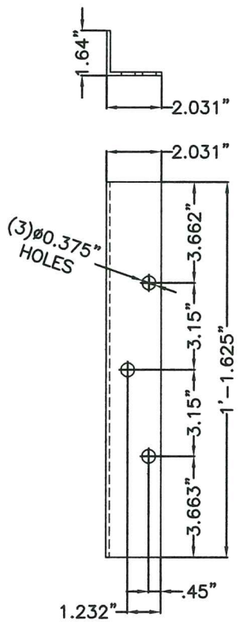

BENCH SUPPORT (PROTO-MBENCH-102)

CUT OF 0.135" THICK HOT ROLLED STEEL SHEET ASTM A 1011
(3 UNITS PER BENCH REQ'D.)

NOTE: PUNCH HOLES, AND BEND.

NTS.

WALTER A. TILLIT JR. LICENSE No. 44167 STATE OF FLORIDA PROFESSIONAL ENGINEER

PRODUCT REVISED
as complying with the Florida Building Code
Acceptance No. 20-0922.02
Expiration Date 10/22/2025
By
Date Product

MIAMI DADE COUNTY

P.E. SEAL/SIGNATURE/DATE

TILTECO INC.
TILLIT TESTING & ENGINEERING COMPANY
6355 N.W. 36th. St., Ste. 305,
VIRGINIA GARDENS, Fl. 33166
Phone:(305)871-1530. Fax:(305)871-1531
e-mail: tilteco@aol.com
CA-0006719
WALTER A. TILLIT Jr., P. E.
FLORIDA Lic. # 44167

MIAMI BUS SHELTER SLIM VERSION W/O OPPI PAL-LI SOLAR DISPLAY PANEL

OUTFRONT MEDIA, INC.
8530 NW 23rd Street
Doral, FL 33122
Phone (786) 646-9136

PROTO-M BENCH-0 DETAILS

No.	Date:	Description: Revisions
1	9/3/2020	OLD 15-120

DRAWN BY: M.P.

9/3/2020
DATE:

20-033
DRAWING No.

SHEET 11 OF 15

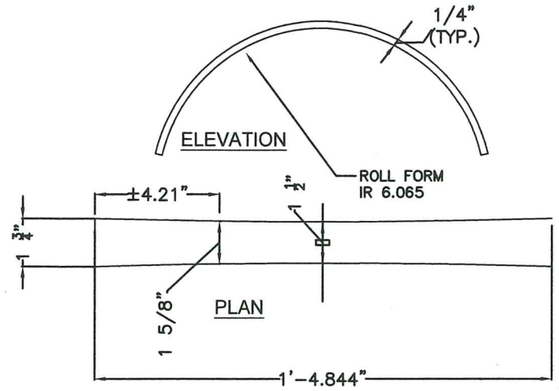

ITEM "A" : TOP ARCHED PLATE
NTS.

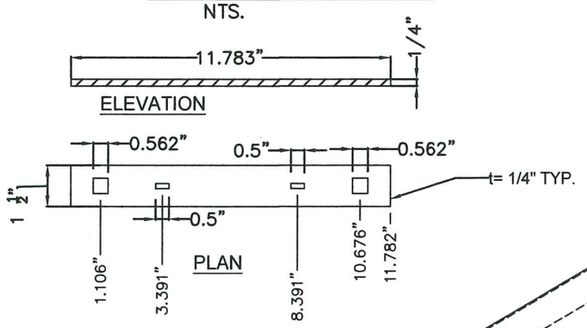

ITEM "B" : BASE PLATE
NTS.

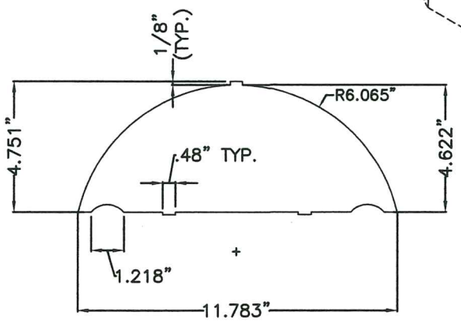

ITEM "C" : WEB PLATE
NTS.

BENCH DIVIDER

5052-H32 ALUMINUM ALLOY

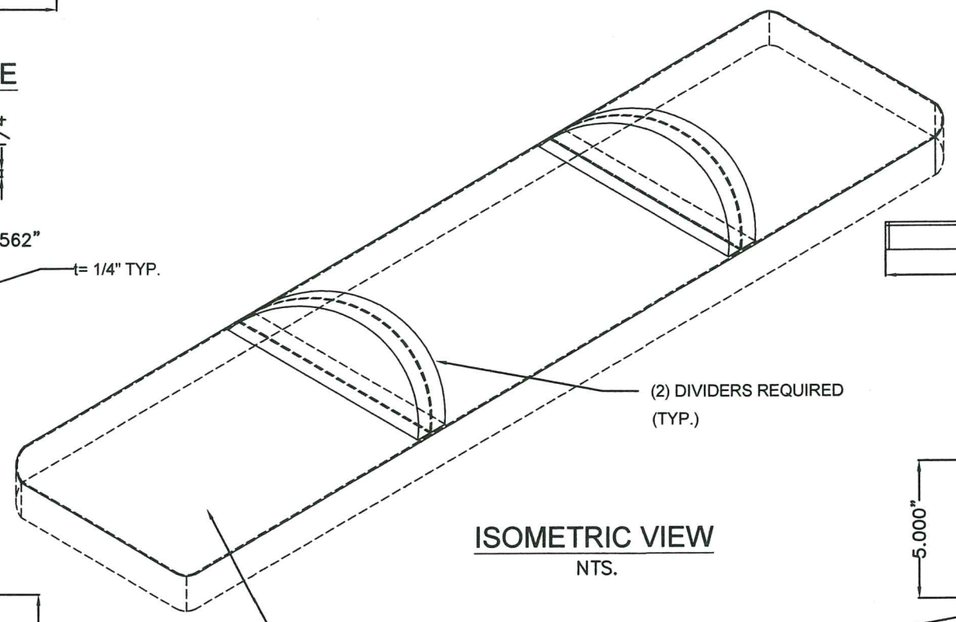

ISOMETRIC VIEW
NTS.

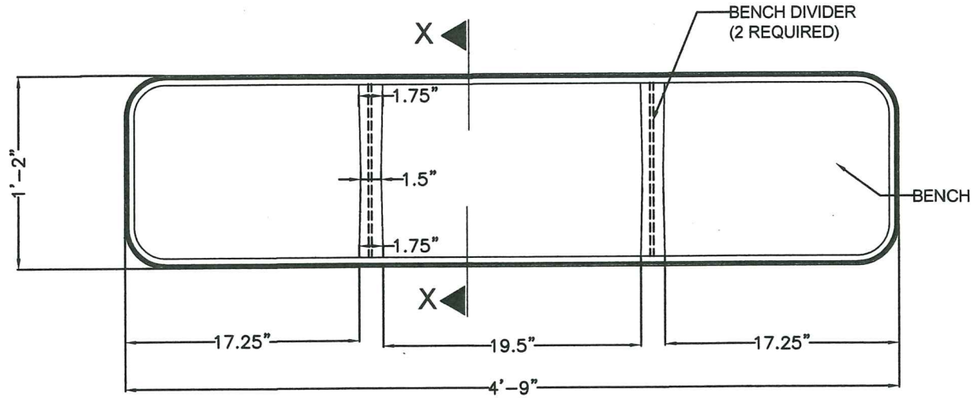

BENCH PLANT W/ DIVIDERS
NTS.

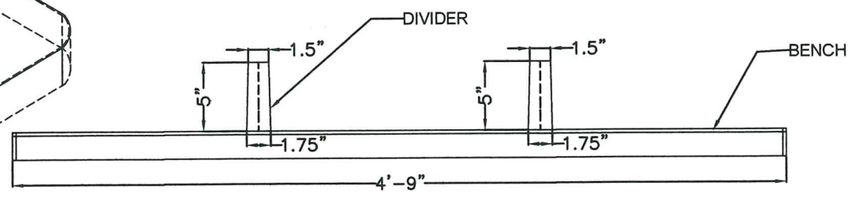

BENCH ELEVATION W/ DIVIDERS
NTS.

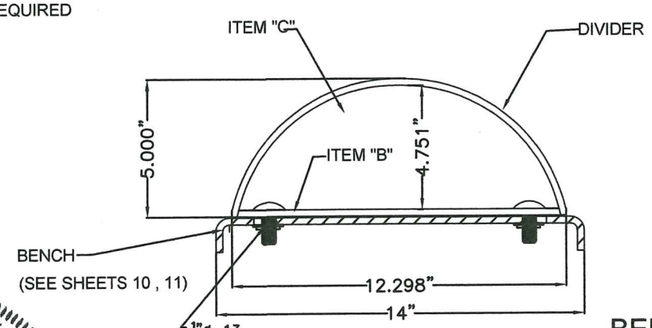

SECTION X-X
NTS.

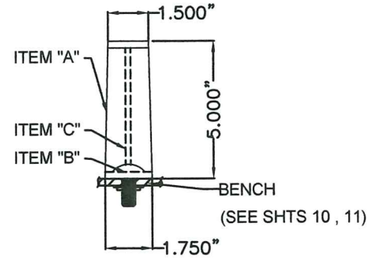

BENCH SIDE VIEW W/ DIVIDER
NTS.

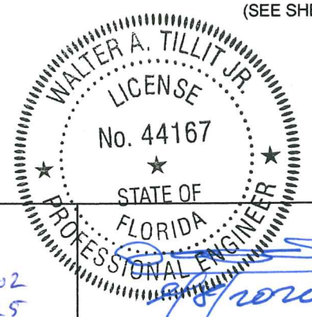

PRODUCT REVISED
as complying with the Florida Building Code
Acceptance No 20-0922.02
Expiration Date 10/22/2025
By Miami Dade Product Control

MIAMI DADE COUNTY

P.E. SEAL/SIGNATURE/DATE

TILTECO INC.

TILLIT TESTING & ENGINEERING COMPANY
6355 N.W. 36th. St., Ste. 305,
VIRGINIA GARDENS, Fl. 33166
Phone:(305)871-1530. Fax:(305)871-1531
e-mail: tilteco@aol.com
CA-0006719
WALTER A. TILLIT Jr., P. E.
FLORIDA Lic. # 44167

MIAMI BUS SHELTER SLIM VERSION W/O OPPI PAL-LI SOLAR DISPLAY PANEL

PROTO-M BENCH-0 DETAILS

OUTFRONT MEDIA, INC.
8530 NW 23rd Street
Doral, FL 33122
Phone (786) 646-9136

No.	Date:	Description: Revisions
1	9/3/2020	OLD 15-120

DRAWN BY: M.P.

DATE: 9/3/2020

20-033
DRAWING No.

SHEET 11AOF 15

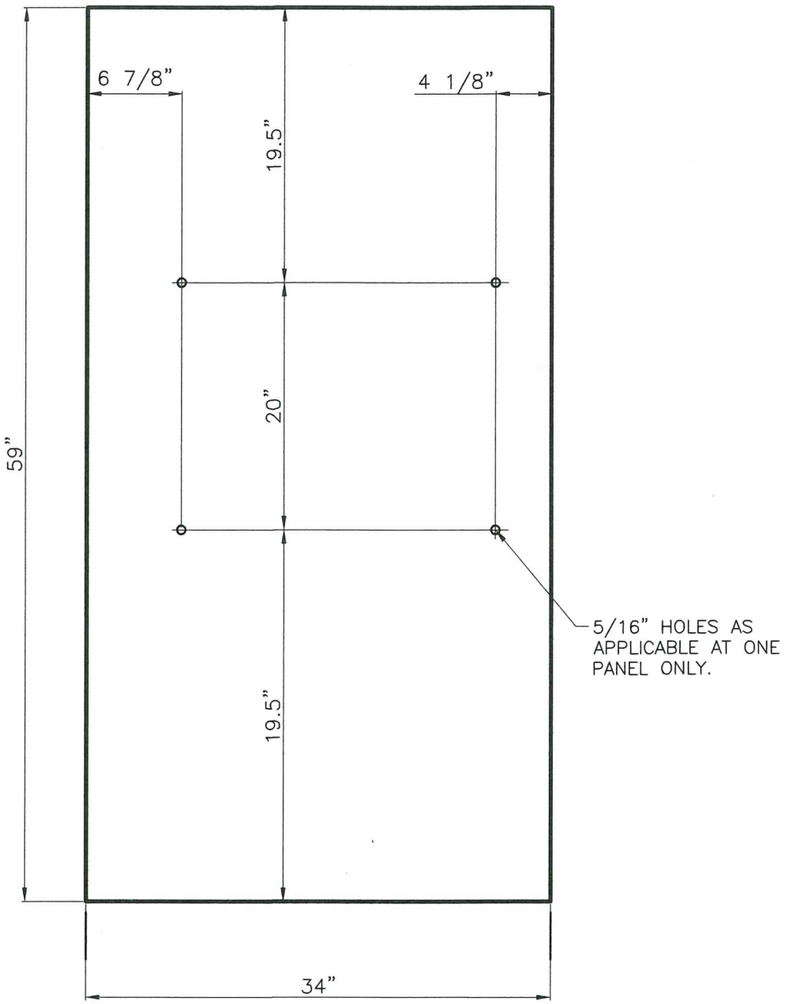

REAR WALL GLASS – BUS SHELTER

N.T.S
10mm TEMPERED GLASS W/ GROUND EDGES
REQUIRES:(4) PER UNIT

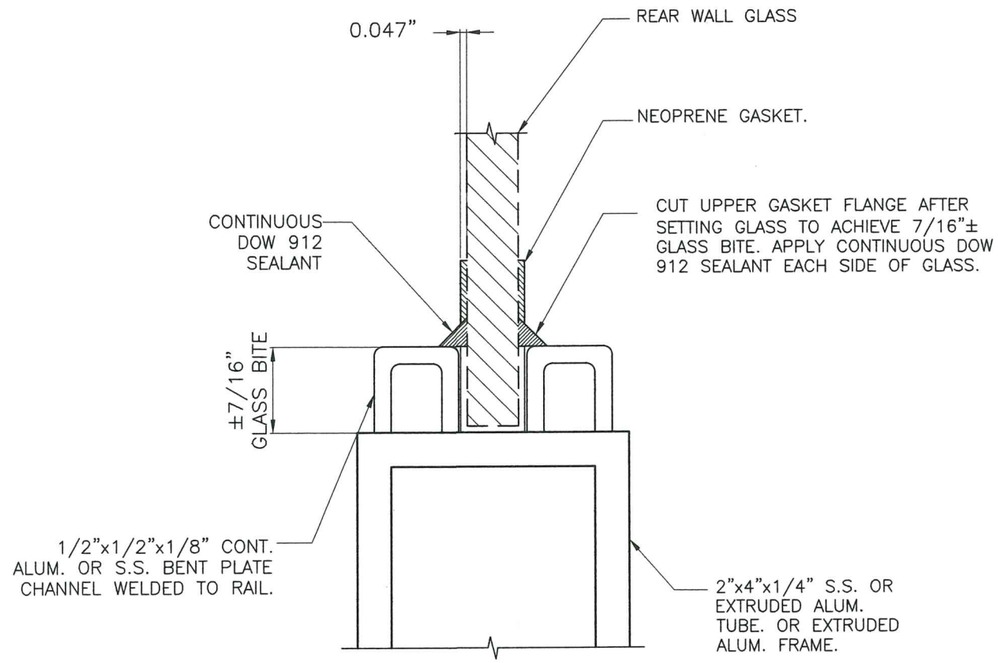

RUBBER GASKET–UPPER & LOWER GLASS EDGE: GLAZING DETAIL

N.T.S.
MATERIAL: NEOPRENE RUBBER
REQUIRES:(24') PER UNIT
THICKNESS: 10mm

WALTER A. TILLIT JR. LICENSE No. 44167 STATE OF FLORIDA PROFESSIONAL ENGINEER

PRODUCT REVISED
as complying with the Florida Building Code
Acceptance No 20-0922.05
Expiration Date 10/22/2025
By Miami Dade Product Control
MIAMI DADE COUNTY

P.E. SEAL/SIGNATURE/DATE

TILLECO INC.
TILLIT TESTING & ENGINEERING COMPANY
6355 N.W. 36th. St., Ste. 305,
VIRGINIA GARDENS, Fl. 33166
Phone:(305)871-1530. Fax:(305)871-1531
e-mail: tilteco@aol.com
CA-0006719
WALTER A. TILLIT Jr., P. E.
FLORIDA Lic. # 44167

MIAMI BUS SHELTER SLIM VERSION W/O OPPI PAL–LI SOLAR DISPLAY PANEL

OUTFRONT MEDIA, INC.
8530 NW 23rd Street
Doral, FL 33122
Phone (786) 646-9136

REAR WALL GLASS

No.	Date:	Description: Revisions
1	9/3/2020	OLD 15–120

DRAWN BY: M.P.
9/3/2020
DATE:
20-033
DRAWING No.

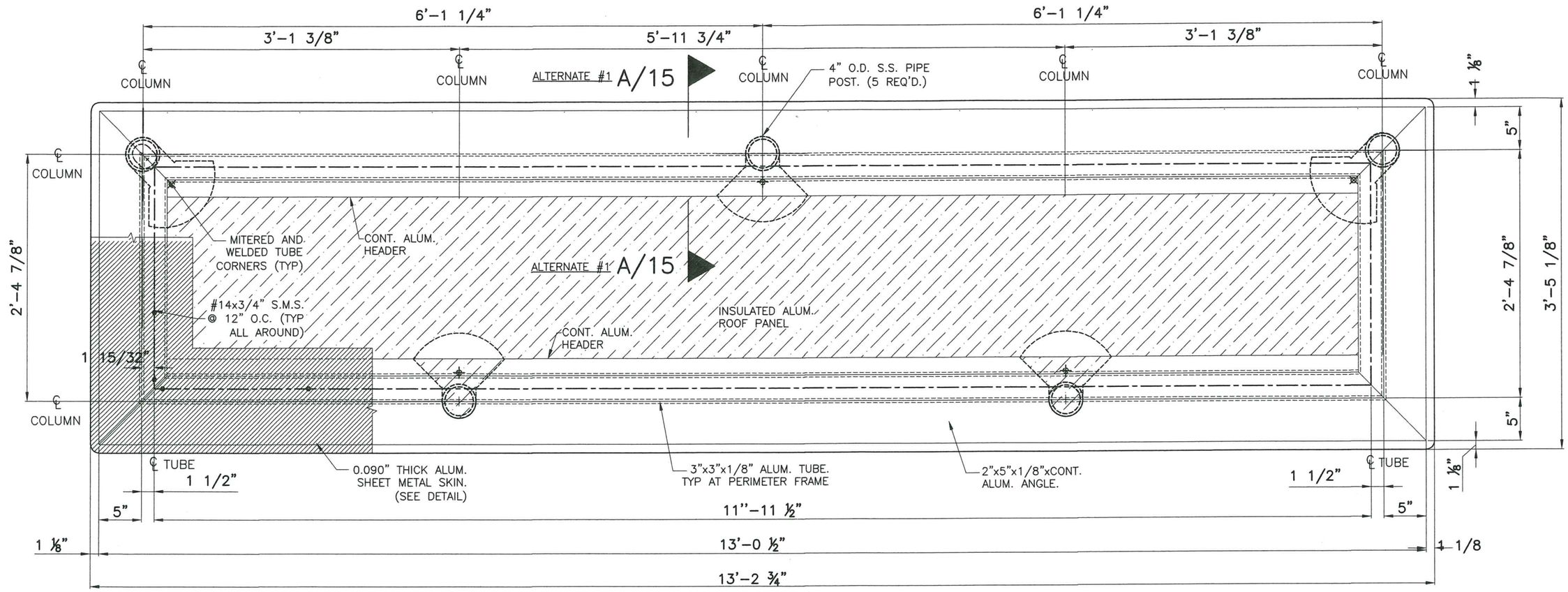

ROOF STRUCTURE PLAN
ALTERNATE #1
SCALE: 1"=1'-0"

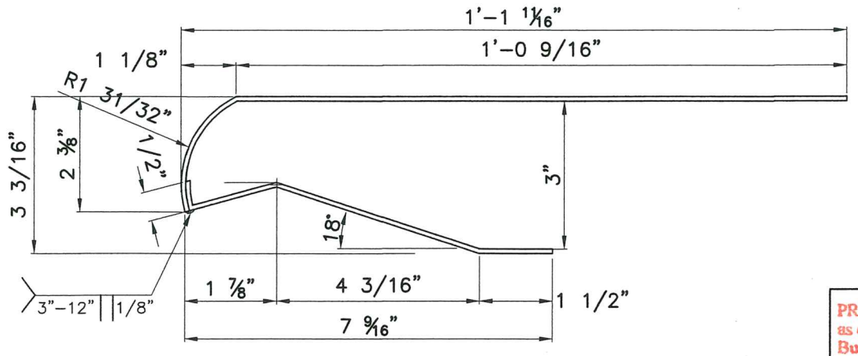

0.090" THICK ALUM. SHEET METAL SKIN. (DETAIL)
N.T.S.

PRODUCT REVISED
as complying with the Florida Building Code
Acceptance No 20-0922.05
Expiration Date 10/22/2025
By Miami Dade Product Control

MIAMI DADE COUNTY

WALTER A. TILLIT JR. LICENSE No. 44167 STATE OF FLORIDA PROFESSIONAL ENGINEER

P.E. SEAL/SIGNATURE/DATE

TILLECO INC.
TILLIT TESTING & ENGINEERING COMPANY
6355 N.W. 36th. St., Ste. 305,
VIRGINIA GARDENS, Fl. 33166
Phone:(305)871-1530. Fax:(305)871-1531
e-mail: tilteco@aol.com
CA-0006719
WALTER A. TILLIT Jr., P. E.
FLORIDA Lic. # 44167

MIAMI BUS SHELTER SLIM VERSION W/O OPPI PAL-LI SOLAR DISPLAY PANEL

OUTFRONT MEDIA, INC.
8530 NW 23rd Street
Doral, FL 33122
Phone (786) 646-9136

DRAWN BY: M.P.

9/3/2020
DATE:

ROOF STRUCTURE PLAN ALTERNATE #1

No.	Date:	Description: Revisions
1	9/3/2020	OLD 15-120

20-033
DRAWING No.

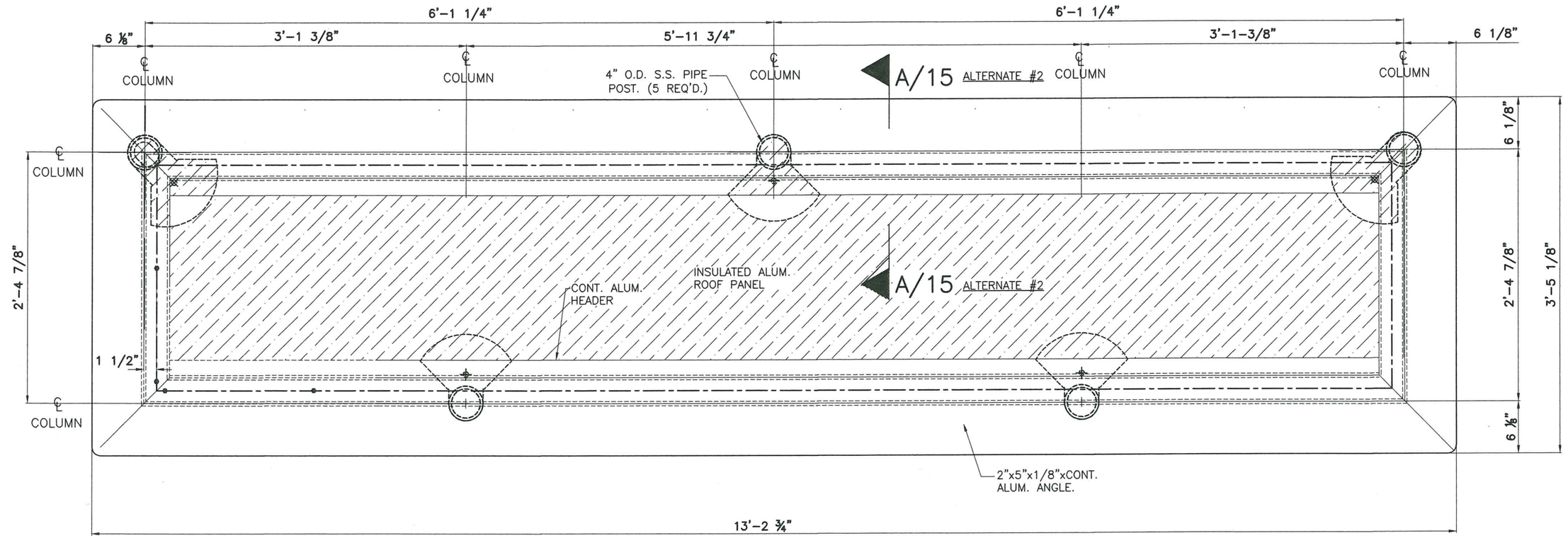

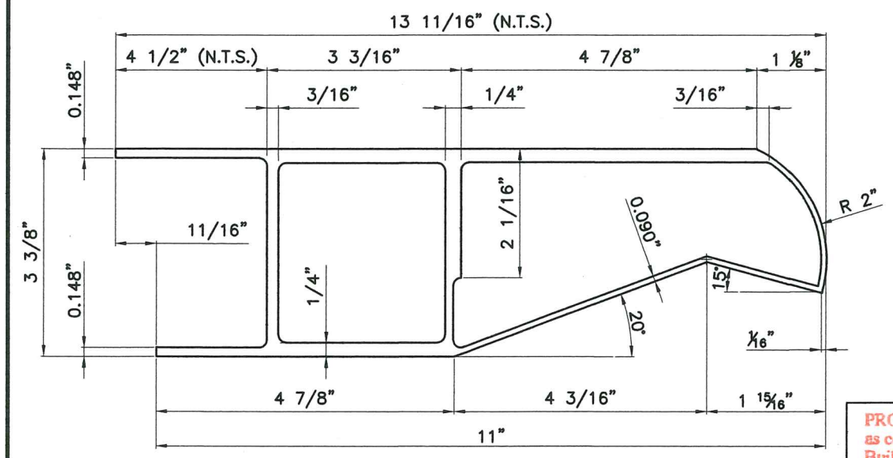

EXTRUDED ALUMINUM SUPPORTING ROOF FRAME DETAIL

N.T.S.

ROOF STRUCTURE PLAN ALTERNATE #2

SCALE: 1"=1'-0"

WALTER A. TILLIT JR. LICENSE No. 44167 STATE OF FLORIDA PROFESSIONAL ENGINEER

PRODUCT REVISED
as complying with the Florida Building Code
Acceptance No 20-0922.02
Expiration Date 10/22/2025
By Miami Dade Product Control

MIAMI DADE COUNTY

P.E. SEAL/SIGNATURE/DATE

TILLECO INC.
TILLIT TESTING & ENGINEERING COMPANY
6355 N.W. 36th. St., Ste. 305,
VIRGINIA GARDENS, Fl. 33166
Phone:(305)871-1530. Fax:(305)871-1531
e-mail: tilteco@aol.com
CA-0006719
WALTER A. TILLIT Jr., P. E.
FLORIDA Lic. # 44167

MIAMI BUS SHELTER
SLIM VERSION
W/O OPPI PAL-LI
SOLAR DISPLAY PANEL

OUTFRONT MEDIA, INC.
8530 NW 23rd Street
Doral, FL 33122
Phone (786) 646-9136

DRAWN BY: M.P.

9/3/2020
DATE:

ROOF STRUCTURE PLAN
ALTERNATE #2

No.	Date:	Description: Revisions
1	9/3/2020	OLD 15-120

20-033
DRAWING No.

SHEET 14 OF 15

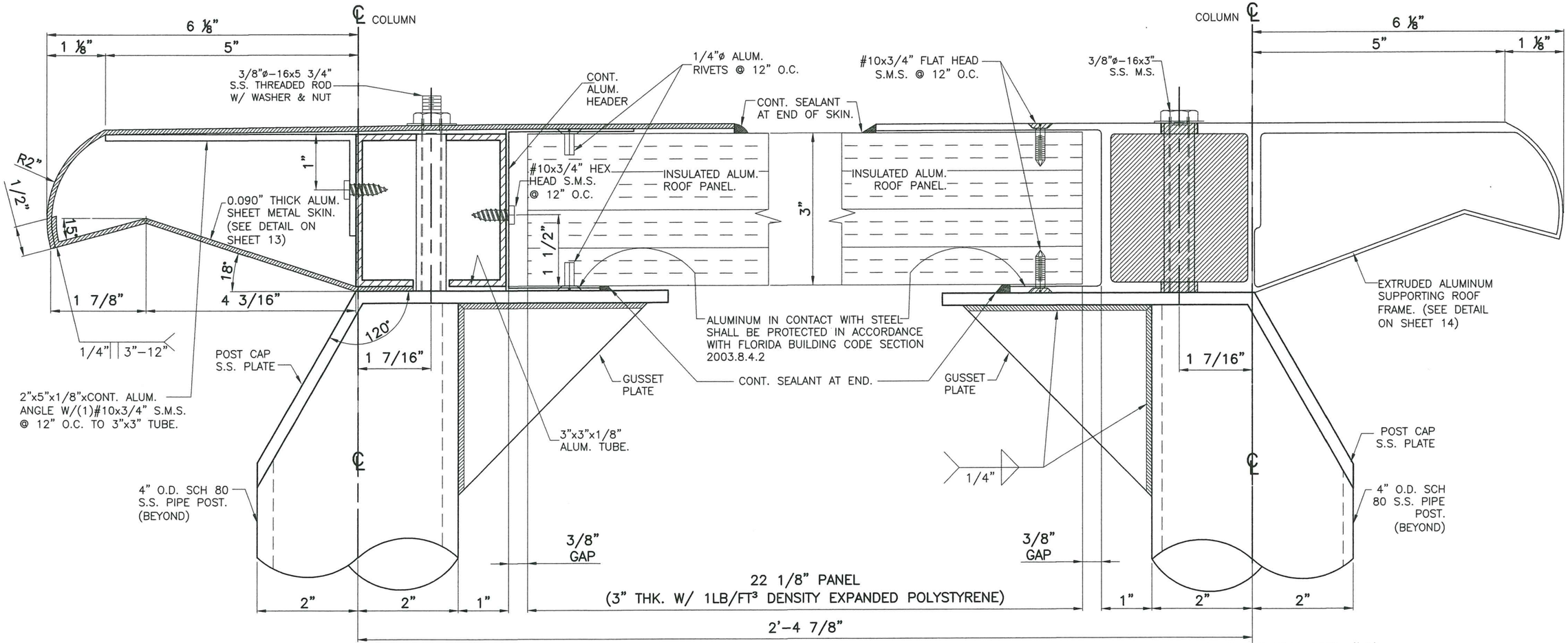

SECTION A–A (ALTERNATE #1)

SECTION A–A (ALTERNATE #2)

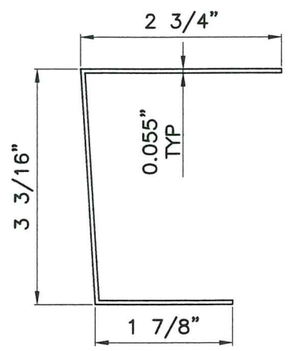

ALUM. HEADER

PRODUCT REVISED
as complying with the Florida Building Code
Acceptance No 20-0922.02
Expiration Date 10/22/2025
By Miami Dade Product Control

MIAMI DADE COUNTY

WALTER A. TILLIT JR. LICENSE No. 44167 STATE OF FLORIDA PROFESSIONAL ENGINEER

P.E. SEAL/SIGNATURE/DATE

TILLECO INC.
TILLIT TESTING & ENGINEERING COMPANY
6355 N.W. 36th. St., Ste. 305,
VIRGINIA GARDENS, Fl. 33166
Phone:(305)871-1530. Fax:(305)871-1531
e-mail: tilteco@aol.com
CA-0006719
WALTER A. TILLIT Jr., P. E.
FLORIDA Lic. # 44167

MIAMI BUS SHELTER SLIM VERSION W/O OPPI PAL–LI SOLAR DISPLAY PANEL

ROOF ALTERNATE #1 & #2 SECTIONS

OUTFRONT MEDIA, INC.
8530 NW 23rd Street
Doral, FL 33122
Phone (786) 646-9136

No.	Date:	Description: Revisions
1	9/3/2020	OLD 15–120

DRAWN BY: M.P.

9/3/2020
DATE:

20-033
DRAWING No.

SHEET 15 OF 15