MIAMI-DADE COUNTY
DEPARTMENT OF REGULATORY AND ECONOMIC RESOURCES (RER)
BOARD AND CODE ADMINISTRATION DIVISION

MIAMI-DADE COUNTY
PRODUCT CONTROL SECTION
11805 SW 26 Street, Room 208
Miami, Florida 33175-2474
T (786) 315-2590 F (786) 315-2599
www.miamidade.gov/building

NOTICE OF ACCEPTANCE (NOA)

Florida Storm Panel Supply, LLC
14475 N.W. 26th Avenue
Opa Locka, Florida 33054

SCOPE:

This NOA is being issued under the applicable rules and regulations governing the use of construction materials. The documentation submitted has been reviewed and accepted by Miami-Dade County RER- Product Control Section to be used in Miami Dade County and other areas where allowed by the Authority Having Jurisdiction (AHJ).

This NOA shall not be valid after the expiration date stated below. The Miami-Dade County Product Control Section (In Miami Dade County) and/or the AHJ (in areas other than Miami Dade County) reserve the right to have this product or material tested for quality assurance purposes. If this product or material fails to perform in the accepted manner, the manufacturer will incur the expense of such testing and the AHJ may immediately revoke, modify, or suspend the use of such product or material within their jurisdiction. RER reserves the right to revoke this acceptance if it is determined by Miami-Dade County Product Control Section that this product or material fails to meet the requirements of the applicable building code.

This product is approved as described herein and has been designed to comply with the High Velocity Hurricane Zone of the Florida Building Code.

DESCRIPTION: 0.035" (min.) Galvanized Steel Storm Panels Shutter

APPROVAL DOCUMENT: Drawing # AD12-31, titled "20 Ga. Galvanized Steel Storm Panel-LMI", sheets 1 through 4 of 4, prepared by MCY Engineering, Inc., last revision #3 dated October 28, 2020, signed and sealed by Yiping Wang, P.E., on October 28, 2020, bearing the Miami-Dade County Product Control Revision stamp with the Notice of Acceptance number and the expiration date by the Miami-Dade County Product Control Section.

MISSILE IMPACT RATING: Large and Small Missile Impact Resistant

LABELING: Each panel shall bear a permanent label with the manufacturer's name or logo, city, state, the following statement: "Miami-Dade County Product Control Approved", and NOA number, per TAS-201, TAS-202, and TAS-203, unless otherwise noted herein.

RENEWAL of this NOA shall be considered after a renewal application has been filed and there has been no change in the applicable building code negatively affecting the performance of this product.

TERMINATION of this NOA will occur after the expiration date or if there has been a revision or change in the materials, use, and/or manufacture of the product or process. Misuse of this NOA as an endorsement of any product, for sales, advertising or any other purposes shall automatically terminate this NOA. Failure to comply with any section of this NOA shall be cause for termination and removal of NOA.

ADVERTISEMENT: The NOA number preceded by the words Miami-Dade County, Florida, and followed by the expiration date may be displayed in advertising literature. If any portion of the NOA is displayed, then it shall be done in its entirety.

INSPECTION: A copy of this entire NOA shall be provided to the user by the manufacturer or its distributors and shall be available for inspection at the job site at the request of the Building Official.

This NOA **revises NOA #18-1120.03** and consists of this page 1, evidence submitted pages E-1, E-2, E-3, E-4, E-5 & E-6 as well as approval document mentioned above.
The submitted documentation was reviewed by **Helmy A. Makar, P.E., M.S.**

MIAMI-DADE COUNTY APPROVED

Helmy A. Makar
03/04/2021

NOA No. 20-1102.15
Expiration Date: 01/04/2024
Approval Date: 03/04/2021

Florida Storm Panel Supply, LLC

NOTICE OF ACCEPTANCE: EVIDENCE SUBMITTED

1. EVIDENCE SUBMITTED UNDER PREVIOUS APPROVALS

A. DRAWINGS

1. *Drawing No. 95-498, Florida Storm Panels, Inc., 20 gage Storm Panels, Sheets 1, 2, 3 and 4 of 4, prepared by Knezevich & Associates, Inc., dated 02/26/97, signed and sealed by V.J. Knezevich, P.E.*

B. TESTS

1. *Test report on Large Missile Impact Test, Cyclic Wind Pressure Test and Uniform Static Air Pressure Test of 20 gage storm panels, prepared by Construction Testing Corporation, Report No. CTC-95-032, dated September 26 through 29, 1995, signed and sealed by Christopher G. Tyson, P.E.*
2. *Test report on Large Missile Impact and Cyclic Wind Pressure, of 20 Gage Steel Storm Panels, prepared by Construction Testing Corp., Report No. CTC-96-009, dated February 26 & 28, 1996, signed and sealed by Christopher G. Tyson, P.E.*

C. CALCULATIONS

1. *Storm panel calculations and comparative analysis, Sheet 1 through 24, Knezevich and Associates, Inc., signed and sealed by V.J. Knezevich, P.E., dated October 2, 1995.*
2. *Storm panel calculations and comparative analysis, by Knezevich and Associates, Inc., signed and sealed by V.J. Knezevich, P.E., dated 06/14/96 and 02/26/97.*

D. MATERIAL CERTIFICATION

1. *Mill Certified Inspection Report, dated 5/26/95, for Hot Dipped Galvanized Steel, ASTM A446 by Productor de Acero Laktbal, C.A., with chemical composition and physical properties.*
2. *Tensile Test Report from QC Metallurgical, Inc., # 5IM-2162 dated 09/26/95 for galvanized steel, tested per ASTM E8-93, signed & sealed by James W. Roese, P.E.*
3. *Tensile Test Reports from QC Metallurgical, Inc., Job No. 6CM-719 dated 03/25/96 for galvanized steel, tested per ASTM E8-93, signed and sealed by Frank Grate, P.E.*

2. EVIDENCE SUBMITTED UNDER PREVIOUS APPROVAL #99-0105.03

A. DRAWINGS

1. *None.*

B. TESTS

1. *None.*

C. CALCULATIONS

1. *None.*

D. MATERIAL CERTIFICATIONS

1. *None.*

Helmy A. Makar, P.E., M.S.
Product Control Section Supervisor
NOA No. 20-1102.15
Expiration Date: 01/04/2024
Approval Date: 03/04/2021

NOTICE OF ACCEPTANCE: EVIDENCE SUBMITTED

3. EVIDENCE SUBMITTED UNDER PREVIOUS APPROVAL #99-0804.01

A. DRAWINGS

1. *Drawing No. 99-097, Florida Storm Panels, Inc., titled "20 Ga. Galvanized Steel Storm Panel", Sheets 1, 2, 3 and 4 of 4, prepared by Knezevich & Associates, Inc., dated 07/19/99, last revision #2 dated 12/23/99, signed and sealed by V.J. Knezevich, P.E.*

B. TESTS

1. *None.*

C. CALCULATIONS

1. *Anchor calculations, sheets 1 through 28, prepared by Knezevich and Associates, Inc., signed and sealed by V.J. Knezevich, P.E., dated July 21, 1999.*
2. *Revised anchor calculations, sheets 1 through 8, prepared by Knezevich and Associates, Inc., signed and sealed by V.J. Knezevich, P.E., dated December 29, 1999.*

D. MATERIAL CERTIFICATIONS

1. *None.*

4. EVIDENCE SUBMITTED UNDER PREVIOUS APPROVAL #02-0531.02

A. DRAWINGS

1. *Drawing No. 99-097, titled " 20 Ga. Galvanized Steel Storm Panel ", sheets 1 through 4 of 4, prepared by Knezevich & Associates, Inc., dated July 19, 1999, last revision #3 dated May 22, 2002, signed and sealed by V.J. Knezevich, P.E.*

B. TESTS

1. *None.*

C. CALCULATIONS

1. *None.*

D. MATERIAL CERTIFICATIONS

1. *None.*

5. EVIDENCE SUBMITTED UNDER PREVIOUS APPROVAL #02-0826.07

A. DRAWINGS

1. *None.*

B. TESTS

1. *None.*

C. CALCULATIONS

1. *None.*

D. MATERIAL CERTIFICATIONS

1. *None.*

Helmy A. Makar, P.E., M.S.
Product Control Section Supervisor
NOA No. 20-1102.15
Expiration Date: 01/04/2024
Approval Date: 03/04/2021

NOTICE OF ACCEPTANCE: EVIDENCE SUBMITTED

6. EVIDENCE SUBMITTED UNDER PREVIOUS APPROVAL #06-0110.03

A. DRAWINGS

1. *Drawing No. 05-536, titled " 20 Ga. Galvanized Steel Storm Panel ", sheets 1 through 4 of 4, prepared by Thornton-Tomasetti Group, dated January 06, 2006, last revision #0 dated January 06, 2006, signed & sealed by J.W. Knezevich, P.E.*

B. TESTS

1. *None.*

C. CALCULATIONS

1. ***Revised** Anchor Calc. for 20 Ga. Galvanized steel Storm Panels, dated 12/20/05, 24 pages, issued by Thornton-Tomasetti Group, signed & sealed by J. W. Knezevich, P.E*

D. QUALITY ASSURANCE

1. *By Miami-Dade County Building Code Compliance Office.*

E. MATERIAL CERTIFICATIONS

1. *None.*

7. EVIDENCE SUBMITTED UNDER PREVIOUS APPROVAL # 07-0817.02

A. DRAWINGS

1. *None.*

B. TESTS

1. *None.*

C. CALCULATIONS

1. *None.*

D. QUALITY ASSURANCE

1. *By Miami-Dade County Building Code Compliance Office.*

E. MATERIAL CERTIFICATIONS

1. *None.*

8. EVIDENCE SUBMITTED UNDER PREVIOUS APPROVAL # 09-0114.03

A. DRAWINGS

1. *None.*

B. TESTS

1. *Test report on Large Missile Impact, Cyclic Wind Pressure and Uniform Static Air Pressure of 20 gage storm panels, prepared by Construction Testing Corporation, Report # CTC-08-018, dated 12/21/08, signed & sealed by Yamil G. Kuri, P.E.*

Helmy A. Makar, P.E., M.S.
Product Control Section Supervisor
NOA No. 20-1102.15
Expiration Date: 01/04/2024
Approval Date: 03/04/2021

NOTICE OF ACCEPTANCE: EVIDENCE SUBMITTED

C. CALCULATIONS
1. None.

D. QUALITY ASSURANCE
1. By Miami-Dade County Building Code Compliance Office.

E. MATERIAL CERTIFICATIONS
1. None.

9. EVIDENCE SUBMITTED UNDER PREVIOUS APPROVAL #12-0330.15

A. DRAWINGS
1. Drawing # AD12-31, titled " 20 Ga. Galvanized Steel Storm Panel-LMI ", sheets 1 through 4 of 4, prepared by MCY Engineering, Inc., dated March 30, 2012, signed & sealed by Yiping Wang, P.E.

B. TESTS
1. None.

C. CALCULATIONS
1. None.

D. QUALITY ASSURANCE
1. By Miami-Dade County Department of Permitting, Environment, and regulatory Affairs (PERA).

E. MATERIAL CERTIFICATIONS
1. None.

10. EVIDENCE SUBMITTED UNDER PREVIOUS APPROVAL #14-0221.04

A. DRAWINGS
1. Drawing # AD12-31, titled " 20 Ga. Galvanized Steel Storm Panel-LMI ", sheets 1 through 4 of 4, prepared by MCY Engineering, Inc., dated March 30, 2012, signed & sealed by Yiping Wang, P.E., on January 21, 2014.

B. TESTS
1. None.

C. CALCULATIONS
1. None.

D. QUALITY ASSURANCE
1. By Miami-Dade County Department of Regulatory and Economic Resources.

E. MATERIAL CERTIFICATIONS
1. None.

Helmy A. Makar, P.E., M.S.
Product Control Section Supervisor
NOA No. 20-1102.15
Expiration Date: 01/04/2024
Approval Date: 03/04/2021

NOTICE OF ACCEPTANCE: EVIDENCE SUBMITTED

11. EVIDENCE SUBMITTED UNDER PREVIOUS APPROVAL #15-0615.07

A. DRAWINGS

1. *Drawing # AD12-31, titled " 20 Ga. Galvanized Steel Storm Panel-LMI ", sheets 1 through 4 of 4, prepared by MCY Engineering, Inc., last revision #1 dated May 27, 2015, signed & sealed by Yiping Wang, P.E., on June 02, 2015.*

B. TESTS

1. *None.*

C. CALCULATIONS

1. *None.*

D. QUALITY ASSURANCE

1. *By Miami-Dade County Department of Regulatory and Economic Resources.*

E. MATERIAL CERTIFICATIONS

1. *None.*

12. EVIDENCE SUBMITTED UNDER PREVIOUS APPROVAL #17-1017.20

A. DRAWINGS

1. *Drawing # AD12-31, titled " 20 Ga. Galvanized Steel Storm Panel-LMI ", sheets 1 through 4 of 4, prepared by MCY Engineering, Inc., signed & sealed by Yiping Wang, P.E., on September 29, 2017.*

B. TESTS

1. *None.*

C. CALCULATIONS

1. *None.*

D. QUALITY ASSURANCE

1. *By Miami-Dade County Department of Regulatory and Economic Resources.*

E. MATERIAL CERTIFICATIONS

1. *None.*

F. STATEMENTS

1. *Letter of Compliance with the FBC, 2017 Edition, prepared by MCY Engineering, Inc., signed and sealed by Yiping Wang, P.E., on September 29, 2017.*

Helmy A. Makar, P.E., M.S.
Product Control Section Supervisor
NOA No. 20-1102.15
Expiration Date: 01/04/2024
Approval Date: 03/04/2021

NOTICE OF ACCEPTANCE: EVIDENCE SUBMITTED

13. EVIDENCE SUBMITTED UNDER PREVIOUS APPROVAL #18-1120.03

A. DRAWINGS

1. None.

B. TESTS

1. None.

C. CALCULATIONS

1. None.

D. QUALITY ASSURANCE

1. By Miami-Dade County Department of Regulatory and Economic Resources.

E. MATERIAL CERTIFICATIONS

1. None.

F. STATEMENTS

1. Letter of Compliance with the FBC, 2017 Edition, prepared by MCY Engineering, Inc., signed and sealed by Yiping Wang, P.E., on September 29, 2017.

14. NEW EVIDENCE SUBMITTED

A. DRAWINGS

1. Drawing # AD12-31, titled "20 Ga. Galvanized Steel Storm Panel-LMI", sheets 1 through 4 of 4, prepared by MCY Engineering, Inc., last revision #3 dated October 28, 2020, signed and sealed by Yiping Wang, P.E., on October 28, 2020.

B. TESTS

1. None.

C. CALCULATIONS

1. None.

D. QUALITY ASSURANCE

1. By Miami-Dade County Department of Regulatory and Economic Resources.

E. MATERIAL CERTIFICATIONS

1. None.

F. STATEMENTS

1. Letter of Compliance with the FBC, 2020 Edition, prepared by MCY Engineering, Inc., signed and sealed by Yiping Wang, P.E., on October 28, 2020.

Helmy A. Makar, P.E., M.S.
Product Control Section Supervisor
NOA No. 20-1102.15
Expiration Date: 01/04/2024
Approval Date: 03/04/2021

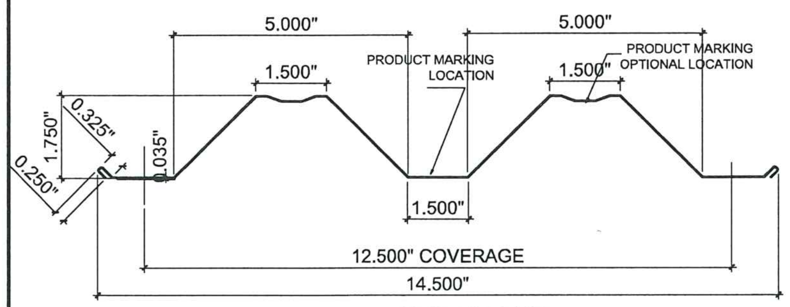

1 STORM PANEL

GENERAL NOTES:

1. THESE APPROVAL DOCUMENTS REPRESENT A SHUTTER SYSTEM ANALYZED WITH THE PROVISION SET FOR THE ISSUANCE OF A NOTICE OF ACCEPTANCE (NOA) BY MIAMI-DADE COUNTY PRODUCT CONTROL DIVISION FOR THE HIGH VELOCITY HURRICANE ZONE (HVHZ) OF THE 6TH EDITION / 7TH EDITION OF FLORIDA BUILDING CODE 2017 / 2020.

2. ULTIMATE DESIGN LOAD OBTAINED FROM ASCE7-10 / ASCE 7-16, MULTIPLY BY 0.6 SHALL BE LESS THAN OR EQUAL TO MAX. DESIGN LOAD IN THIS DOCUMENT.

3. NO INCREASE IN ALLOWABLE STRESS HAS BEEN USED IN THE DESIGN OF THIS PRODUCT. WIND LOAD DURATION FACTOR Cd = 1.6 WAS USED FOR WOOD SCREW DESIGN.

4. DETERMINE THE POSITIVE AND NEGATIVE DESIGN LOADS TO USE WHEN REFERENCING THESE DOCUMENTS IN ACCORDANCE WITH THE GOVERNING CODE WIND VELOCITY. FOR WIND LOAD CALCULATIONS IN ACCORDANCE WITH ASCE 7-10 / ASCE 7-16, A DIRECTIONALITY FACTOR OF Kd = 0.85 SHALL BE USED.

5. THESE APPROVAL DOCUMENTS ARE GENERIC AND DO NOT INCLUDE INFORMATION FOR SITE-SPECIFIC APPLICATION OF THIS SHUTTER SYSTEM.

6. USE THE APPROVAL DOCUMENTS SHALL COMPLY WITH CHAPTER 61G15-23 OF THE FLORIDA ADMINISTRATIVE CODE.

7. THESE APPROVAL DOCUMENTS, ARE SUITABLE TO BE APPLIED BY THE CONTRACTOR DOES NOT DEVIATE FROM THE CONDITIONS DETAILED HEREIN AND THE CONTRACTOR VERIFIES THAT THE EXISTING STRUCTURE DOES NOT DEVIATE IN EITHER FORM OR MATERIAL FROM THE STRUCTURAL SUBSTRATES DETAILED HEREIN.

8. ANY MODIFICATIONS OR ADDITIONS TO THESE APPROVAL DOCUMENTS WILL VOID THE APPROVAL DOCUMENTS.

9. WHEN THE SITE CONDITIONS DEVIATE FROM THESE APPROVAL DOCUMENTS, THE BUILDING OFFICIAL MAY ELECT ONE OF THE FOLLOWING OPTIONS:

   A) REQUIRE THAT SITE SPECIFIC DOCUMENTS BE PREPARED, SIGNED, DATED AND SEALED BY A LICENSED ENGINEER OR REGISTERED ARCHITECT, WHICH DETAIL AND JUSTIFY THE DEVIATION, SAID DOCUMENTS SHALL BE SUBMITTED TO THE PRODUCT ENGINEER FOR REVIEW AS A CONDITION TO THE BUILDING OFFICIAL GRANTING HIS/HER APPROVAL.

   B) REQUIRE THAT A ONE-TIME SITE SPECIFIC APPROVAL BE APPLIED FOR AND SECURED FROM THE MIAMI-DADE COUNTY PRODUCT CONTROL DIVISION

10. STORM PANELS SHALL BE 20 GAUGE STEEL (t = .035") CONFORMING TO ASTM A653 STRUCTURAL QUALITY, GRADE 40, G 60 GALVANIZED COATING, WITH A MINIMUM Fy = 46.7 KSI.

11. PRODUCT MARKINGS SHALL BE WITHIN 12" OF ONE END OF THE PANEL WITH A MINIMUM OF ONE MARKING PER PANEL AND SHALL BE PERMANENTLY LABELED AS FOLLOWS:

    FLORIDA STORM PANEL SUPPLY, LLC.
    OPA LOCKA, FLORIDA
    MIAMI-DADE COUNTY PRODUCT CONTROL APPROVED

12. ALL BOLTS AND WASHERS SHALL BE GALVANIZED OR STAINLESS STEEL WITH A MINIMUM TENSILE STRENGTH OF 60 KSI.

13. ALL EXTRUSIONS SHALL BE 6063-T6 ALUMINUM ALLOY, O.U.N

14. TOP & BOTTOM DETAILS SHOWN MAY BE INTERCHANGED AS FIELD CONDITIONS DICTATE. PANELS MAY BE MOUNTED HORIZONTALLY WHERE APPLICABLE, EXCEPT FOR "h" AND "u" HEADER MOUNTING CONDITIONS.

15. PANELS UTILIZING A STEEL TUBE SHALL BE FASTENED TO OVERLAPS AT MIDSPAN TO A 1"X1"X16 GAUGE STEEL TUBE USING 1/4-20 X 3-1/2" BOLTS W / DIE CAST ALUMINUM WASHERED WINGNUTS OR JACKNUTS (SEE TYPICAL ELEVATION (15) & (16)). FOR PANEL NOT UTILZING STEEL TUBE SHALL BE FASTENED AT MIDSPAN W 1/4-20X1" BOLTS WITH DIE CAST ALUMINUM WASHERED WINGNUTS OR JACKNUTS (SEE TYPICAL ELEVATION (15) & (16)). FOR PANEL SPANS LESS THAN 33" OVERLAP FASTENERS & TUBE ARE NOT REQUIRED. NO STEEL TUBE AND /OR FASTENERS ARE REQUIRED FOR TYPICAL ELEVATION (17).

16. AT LEAST ONE WARNING NOTE PER OPENING SHALL BE PLACED IN A CONSPICUOUS LOCATION ON ANY OF THE COMPONENTS OF THE STORM PANELS SYSTEM ADVISING THE HOME OWNER OR TENANT THAT THE STORM PANELS WILL NOT OFFER HURRICANE PROTECTION UNLESS ALL REINFORCING BOLTS AND / OR STRAPS ARE PROPERLY INSTALLED WHEN REQUIRED. WARNING LABEL SHALL BE FASTENED WITH PERMANENT ADHESIVE OR MECHANICALLY.

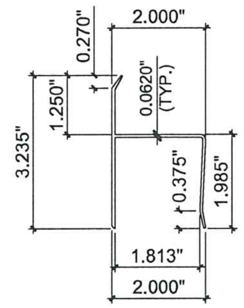

2 "h" HEADER

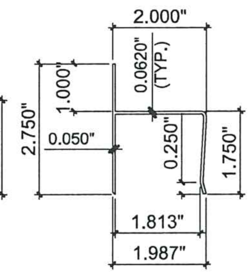

3 "h" HEADER

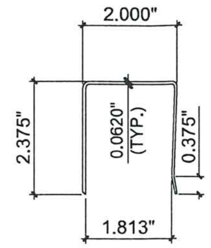

4 "U" HEADER

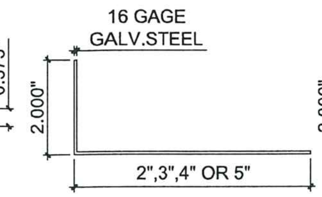

5 ANGLE

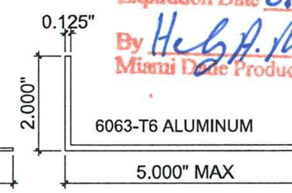

5a ANGLE

PRODUCT REVISED as complying with the Florida Building Code Acceptance No 20-1102.15 Expiration Date 01/04/2024 By [signature] Miami Dade Product Control

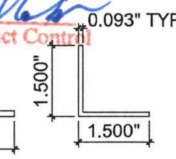

6 ANGLE

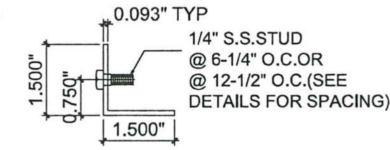

7 STUDDED ANGLE

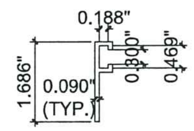

8 "F" TRACK

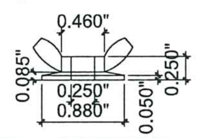

9 WINGNUT

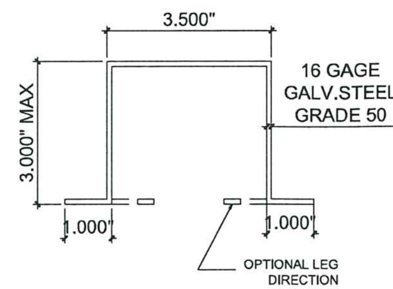

10 STANDARD CHANNEL

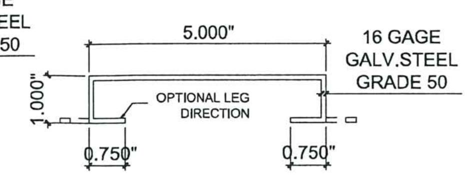

11 SOFFIT CHANNEL

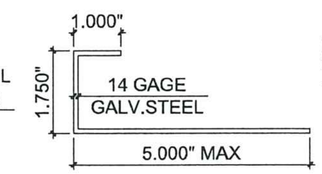

12 CLOSURE

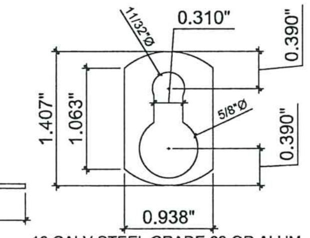

16 GALV.STEEL GRADE 60 OR ALUM. t=MIN. 0.085

13 KEYHOLE WASHER

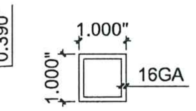

14 STEEL TUBE

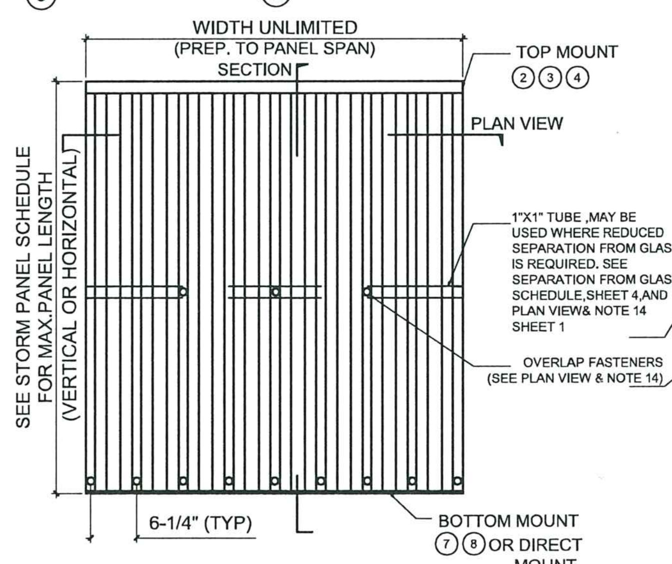

15 TYPICAL ELEVATION (SYSTEM 1)

OVERLAP FASTENERS OR REINFORCING TUBE REQUIRED. TOP MOUNTS SHALL BE "h" OR "U" HEADERS. BOTTOM MOUNTS SHALL BE "F" TRACK OR STUDDED ANGLES WITH STUDS @ 6-1/4" O.C. OR DIRECT MOUNTS WITH ANCHORS @ 6-1/4" O.C.

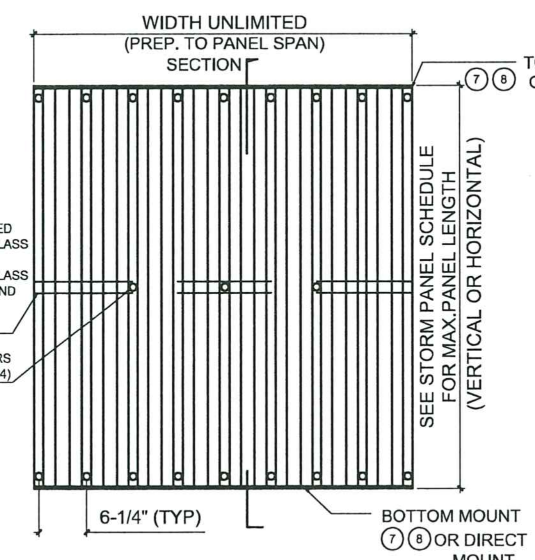

16 TYPICAL ELEVATION (SYSTEM 2)

OVERLAP FASTENERS OR REINFORCING TUBE REQUIRED. TOP & BOTTOM MOUNTS SHALL BE "F" TRACK OR STUDDED ANGLES WITH STUDS @ 6-1/4" O.C .OR DIRECT MOUNTS WITH ANCHORS @ 6-1/4" O.C.

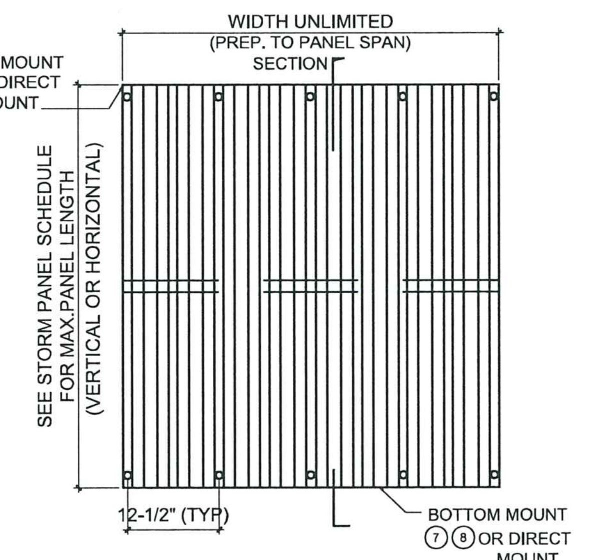

17 TYPICAL ELEVATION (SYSTEM 3)

NO OVERLAP FASTENERS OR REINFORCING TUBE REQUIRED. TOP & BOTTOM MOUNTS SHALL BE "F" TRACK OR STUDDED ANGLES WITH STUDS @ 12-1/2" O.C .OR DIRECT MOUNTS WITH ANCHORS @ 12-1/2" O.C.

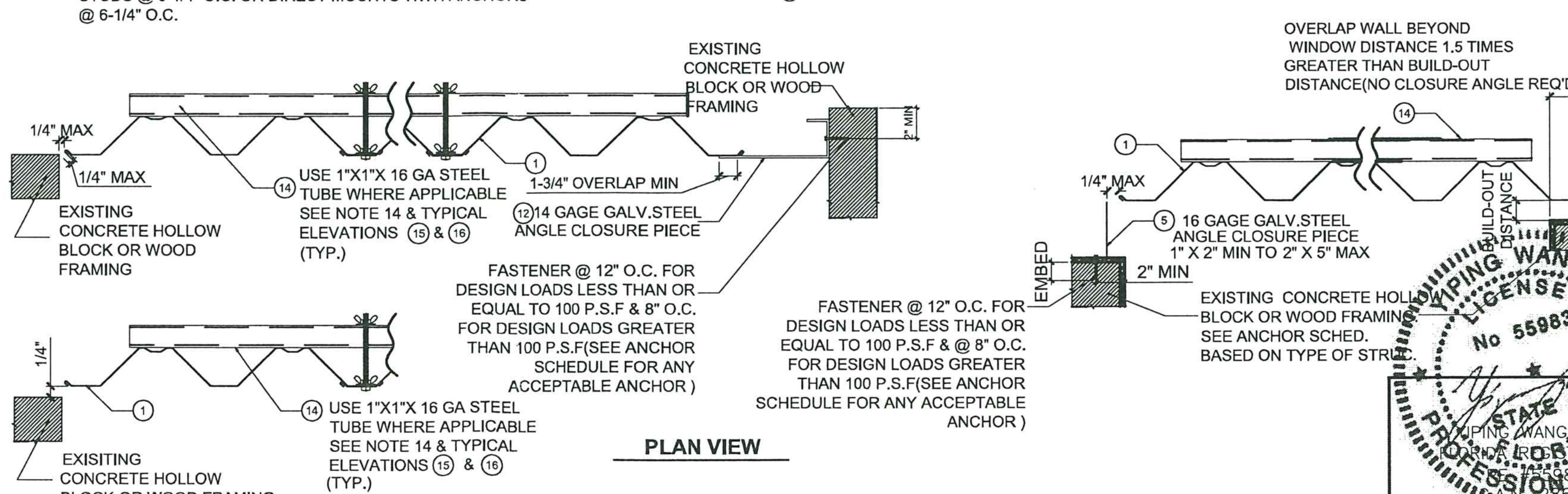

PLAN VIEW

YIPING WANG LICENSE No 55983 STATE OF FLORIDA PROFESSIONAL ENGINEER
YIPING WANG, P.E. FLORIDA REGISTRATION PE #55983

October 28th, 2020

REVISIONS		
NO	DATE	DESCRIPTION
1	05-27-15	UPDATED TO 2014 FBC
2	09/27/17	UPDATED TO 2017 FBC
3	10/28/20	UPDATED TO 2020 FBC

MCY
MCY ENGINEERING, INC.
GLAZING CONSULTANTS
12781 MIRAMAR PKWY. STE.301 P: 305.271.0117
MIRAMAR, FL 33027 P: 786.3602786
www.MCYEngineering.com mcy@mcyengineering.com

20 GA. GALVANIZED STEEL STORM PANEL - LMI
FLORIDA STORM PANEL SUPPLY, LLC.
14475 N.W. 26TH AVE.
OPA LOCKA, FL. 33054
P: (305) 685 - 9000 F: (305) 685 - 7511

DATE	06-02-15
SCALE	AS NOTED
DRAWN	S.L.
PROJECT	MCY 12-073

DRAWING NO.
AD12-31

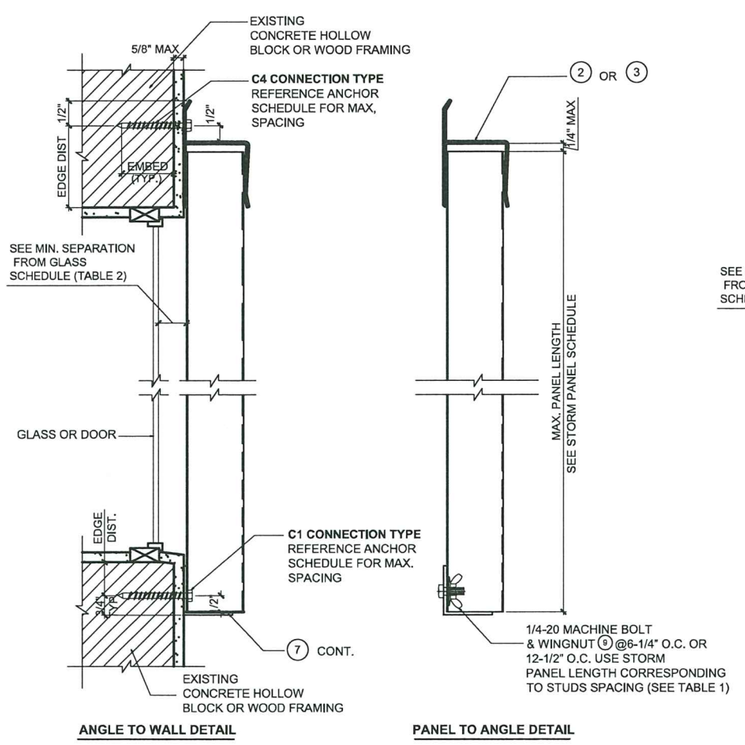

A WALL MOUNT SECTION

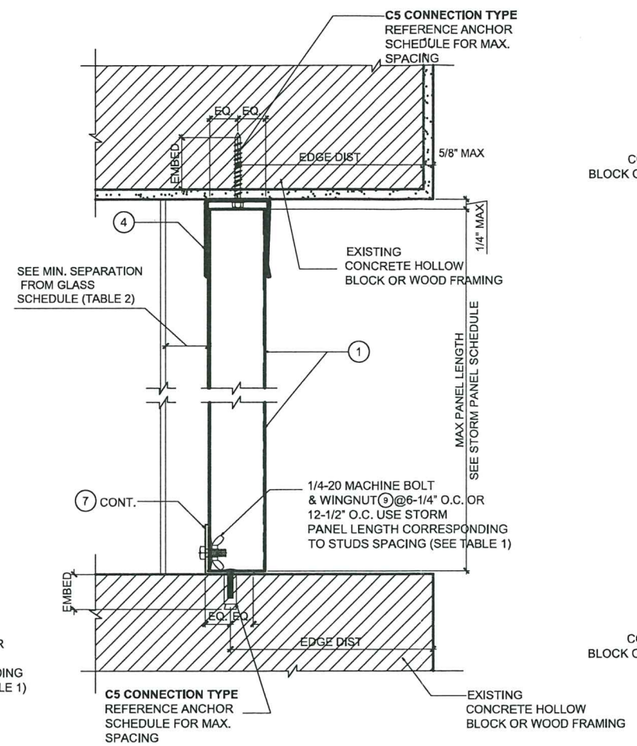

B CEILING/INSIDE MOUNT SECTION

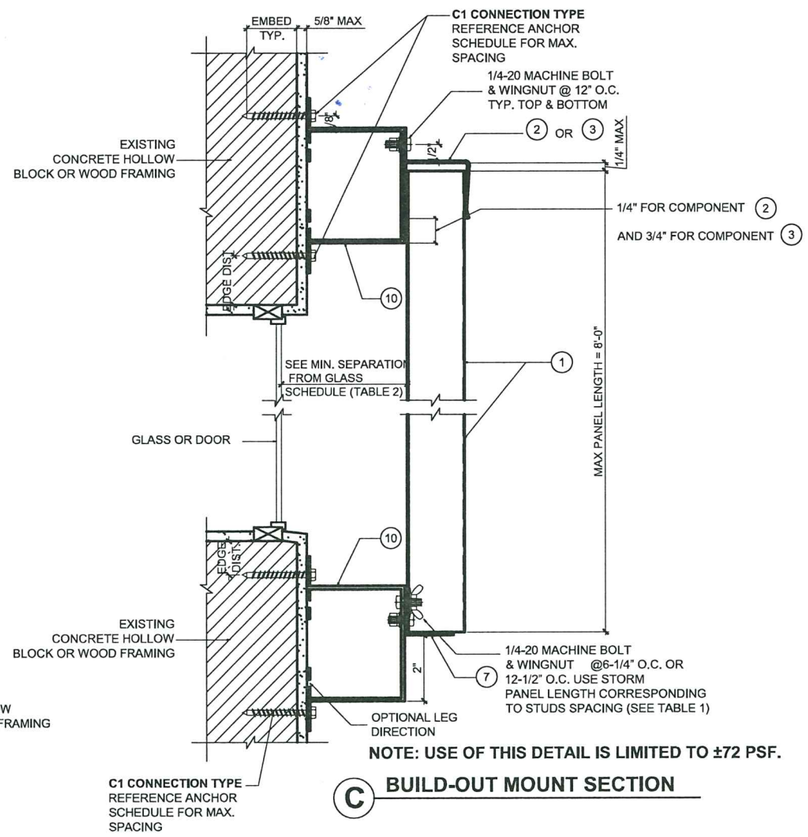

NOTE: USE OF THIS DETAIL IS LIMITED TO ±72 PSF.

C BUILD-OUT MOUNT SECTION

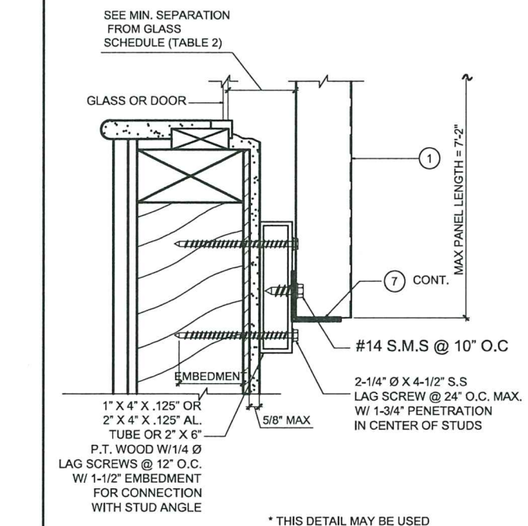

* THIS DETAIL MAY BE USED AT TOP OR BOTTOM OF PANELS.

NOTE: USE OF THIS DETAIL IS LIMITED TO ±72 PSF.

D WALL MOUNT SECTION (BOTTOM)

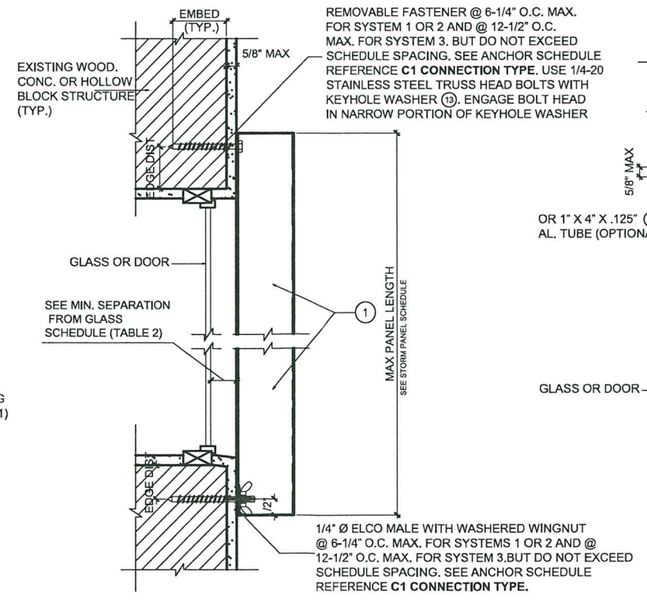

E WALL MOUNT SECTION (DIRECT MOUNT)

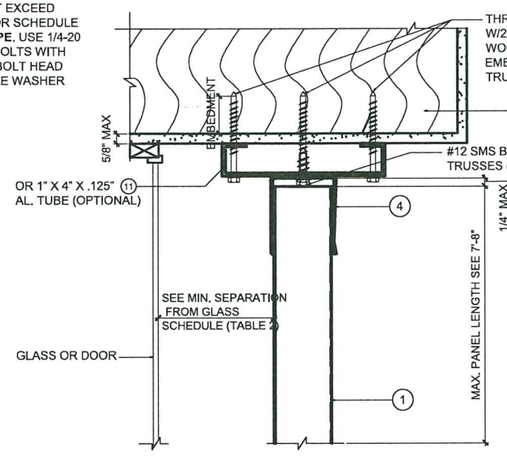

NOTE: USE OF THIS DETAIL IS LIMITED TO ±80 PSF.

F SOFFIT MOUNT DETAIL

PRODUCT REVISED
as complying with the Florida Building Code
Acceptance No 20-1102.15
Expiration Date 01/04/2024
By
Miami Dade Product Control

YIPING WANG LICENSE No 55983 STATE OF FLORIDA PROFESSIONAL ENGINEER
YIPING WANG, PE
FLORIDA REGISTRATION NO. 55983

October 28th, 2020

REVISIONS		
NO	DATE	DESCRIPTION
1	05-27-15	UPDATED TO 2014 FBC
2	09/27/17	UPDATED TO 2017 FBC
3	10/28/20	UPDATED TO 2020 FBC

MCY ENGINEERING, INC.
GLAZING CONSULTANTS
12781 MIRAMAR PKWY. STE.301 P: 305.271.0117
MIRAMAR, FL 33027 P: 786.3602786
www.MCYEngineering.com mcy@mcyengineering.com

20 GA. GALVANIZED STEEL STORM PANEL - LMI

FLORIDA STORM PANEL SUPPLY, LLC.
14475 N.W. 26TH AVE.
OPA LOCKA, FL. 33054
P: (305) 685 - 9000 F: (305) 685 - 7511

DATE	06-02-15
SCALE	AS NOTED
DRAWN	S.I.
PROJECT	MCY 12-073

DRAWING NO.
AD12-31

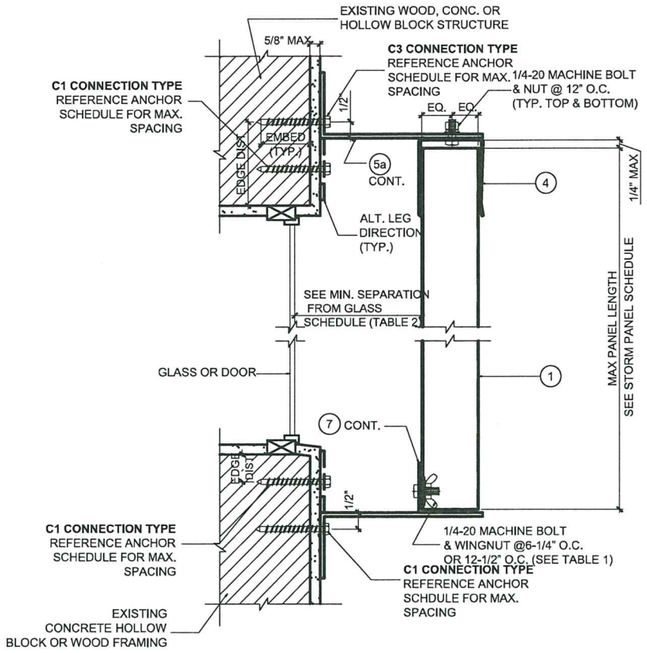

G **BULID-OUT MOUNT SECTION**

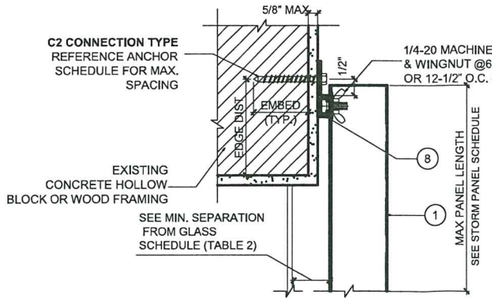

H **"F" TRACK CONNECTION TO EXISTING STRUCTURE [**

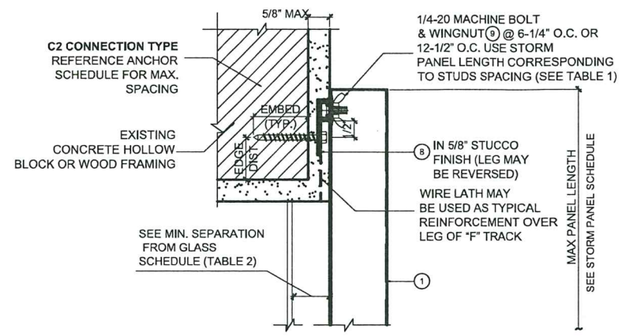

I **"F" TRACK CONNECTION TO NEW STRUCTURE DETAIL**

TABLE 1

STORM PANEL SCHEDULE

NEGATIVE DESIGN LOAD (W) (P.S.F.)	SYSTEM 1 OVERLAP FASTENERS OR REINFORCING TUBE REQUIRED. TOP MOUNTS SHALL BE "h" OR "U" HEADERS. BOTTOM MOUNTS SHALL BE "F" TRACK OR STUDDED ANGLES WITH STUDS @ 6-1/4" O.C. OR DIRECT MOUNTS WITH ANCHORS @ 6-1/4" O.C. MAX. PANEL LENGTH (FT -IN.)	SYSTEM 2 OVERLAP FASTENERS OR REINFORCING TUBE REQUIRED. TOP & BOTTOM MOUNTS SHALL BE "F" TRACK OR STUDDED ANGLES WITH STUDS @ 6-1/4" O.C. OR DIRECT MOUNTS WITH ANCHORS @ 6-1/4" O.C. MAX. PANEL LENGTH (FT -IN.)	SYSTEM 3 NO OVERLAP FASTENERS OR REINFORCING TUBE REQUIRED. TOP & BOTTOM MOUNTS SHALL BE "F" TRACK OR STUDDED ANGLES WITH STUDS @ 12-1/2" O.C. OR DIRECT MOUNTS WITH ANCHORS @ 12-1/2" O.C. MAX. PANEL LENGTH (FT –IN.)
30.0	11 - 0	11 - 0	8 - 8
40.0	11 - 0	11 - 0	8 - 8
50.0	10 - 6	10 - 6	8 - 8
60.0	10 - 1	10 - 1	8 - 8
70.0	9 - 8	9 - 9	8 - 8
80.0	8 - 7	9 - 5	8 - 1
90.0	7 - 8	9 - 1	7 - 2
100.0	6 - 10	8 - 9	6 - 6
110.0	6 - 3	8 - 4	5 - 10
120.0	5 - 9	7 - 11	5 - 5
130.0	5 - 3	7 - 8	5 - 0
140.0	4 - 11	7 - 4	4 - 7
150.0	4 - 7	7 - 1	4 - 3
160.0	4 - 3	6 - 11	4 - 0
170.0	4 - 0	6 - 8	3 - 9
180.0	3 - 10	6 - 6	3 - 7
190.0	3 - 7	6 - 3	3 - 5
200.0	3 - 5	5 - 11	3 - 3
210.0	3 - 3	5 - 8	3 - 1
220.0	3 - 2	5 - 5	2 - 11
230.0	3 - 0	5 - 2	2 - 9

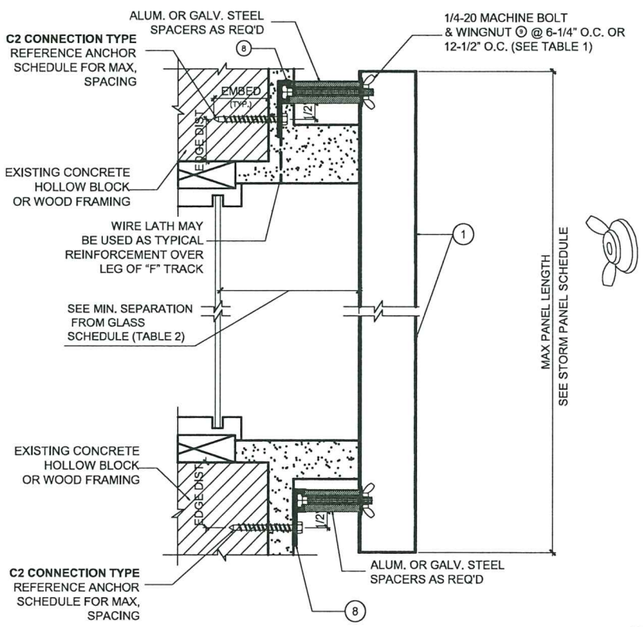

J **ALT."F" TRACK CONNECTION TO NEW STRUCTURE DETAIL**

PRODUCT REVISED
as complying with the Florida Building Code
Acceptance No 20-1102.15
Expiration Date 01/04/2021
By Miami Dade Product Con

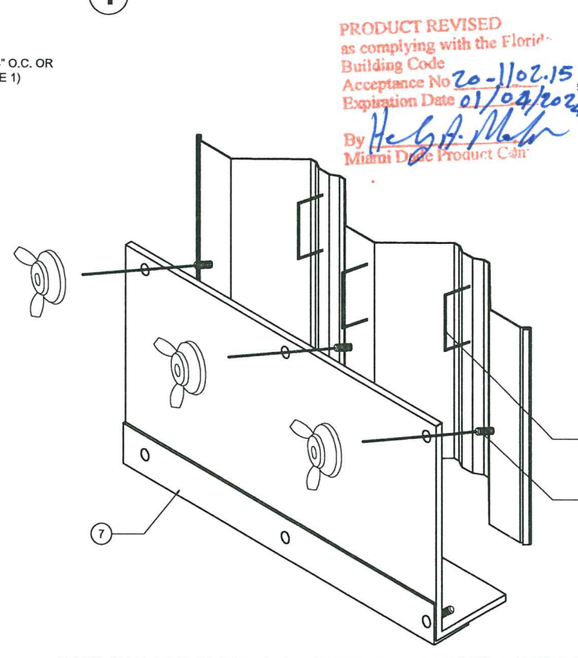

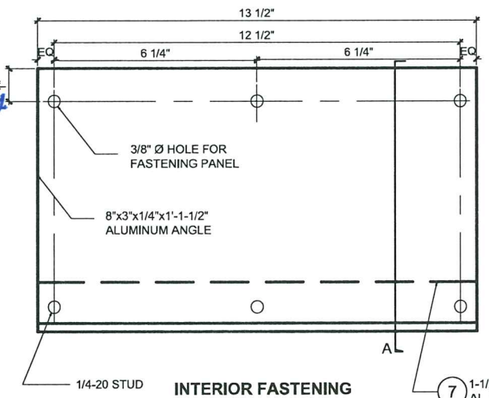

INTERIOR FASTENING ANGLE ASSEMBLY

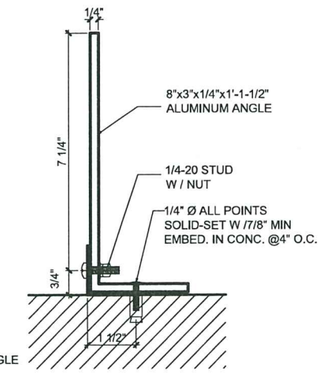

INTERIOR FASTENING ANGLE ASSEMBLY SECTION A

NOTE: USE OF THIS DETAIL IS LIMITED T ±72 PSF AND A MAX. PANEL LENGTH OF 8'-0"

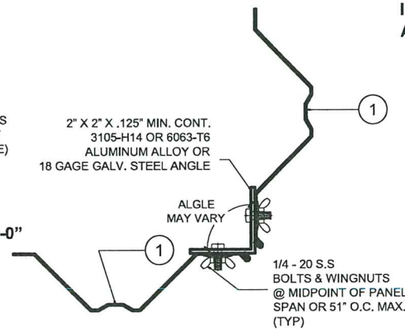

K **STORM PANEL INTERIOR FASTENING (ISOMETRIC)**

REVISIONS		
NO	DATE	DESCRIPTION
1	05-27-16	UPDATED TO 2014 FBC
2	09/27/17	UPDATED TO 2017 FBC
3	10/28/20	UPDATED TO 2020 FBC

MCY ENGINEERING, INC.
GLAZING CONSULTANTS
12781 MIRAMAR PKWY. STE.301 MIRAMAR, FL 33027
P: 305.271.0117
P: 786.3602786
www.MCYEngineering.com mcy@mcyengineering.com

20 GA. GALVANIZED STEEL STORM PANEL - LMI
FLORIDA STORM PANEL SUPPLY, LLC.
14475 N.W. 26TH AVE.
OPA LOCKA, FL. 33054
P: (305) 685 - 9000 F: (305) 685 - 7511

DATE	06-02-15
SCALE	AS NOTED
DRAWN	S.L.
PROJECT	MCY 12-073

DRAWING NO.
AD12-31

3 OF 4

YIPING WANG LICENSE No 55983 STATE OF FLORIDA PROFESSIONAL ENGINEER
YIPING WANG, P.E. FLORIDA REGISTERED PROFESSIONAL ENGINEER

October 28th, 2020

ANCHOR SCHEDULE

FASTENER MAXIMUM SPACING (INCHES) REQUIRED FOR VARIOUS DESIGN LOADS AND SPANS

EXISTING. STRUC.	ANCHOR TYPE	LOAD (W) P.S.F. MAX. (SEE NOTE 1)	MIN 2" EDGE DISTANCE															MIN 3" EDGE DISTANCE														
			SPANS UP TO 5'-6" (SEE NOTE 1)					SPANS UP TO 8'-6" (SEE NOTE 1)					SPANS UP TO 11'-0" (SEE NOTE 1)					SPANS UP TO 5'-6" (SEE NOTE 1)					SPANS UP TO 8'-6" (SEE NOTE 1)					SPANS UP TO 11'-0" (SEE NOTE 1)				
			CONNECTION TYPE (SEE NOTE 3)					CONNECTION TYPE (SEE NOTE 3)					CONNECTION TYPE (SEE NOTE 3)					CONNECTION TYPE (SEE NOTE 3)					CONNECTION TYPE (SEE NOTE 3)					CONNECTION TYPE (SEE NOTE 3)				
			C1	C2	C3	C4	C5	C1	C2	C3	C4	C5	C1	C2	C3	C4	C5	C1	C2	C3	C4	C5	C1	C2	C3	C4	C5	C1	C2	C3	C4	C5
CONCRETE	1/4 "Ø ITW TAPCOM W/ 1-3/4" MIN. EMBEDMENT **(MIN. 3,192 P.S.I. CONCRETE)**	48.0	12.5	12.5	12.5	12.5	12.5	12.5	12.5	12.5	9	10	12.5	12.5	12.5	6.25	8	12.5	12.5	12.5	12.5	12.5	12.5	12.5	12.5	10	12.5	12.5	12.5	12.5	6.25	9
		62.0	12.5	12.5	12.5	12.5	12.5	12.5	12.5	12.5	6.25	8	12.5	12.5	12.5	4	6.25	12.5	12.5	12.5	12.5	12.5	12.5	12.5	12.5	6.25	9	12.5	12.5	12.5	4	7
		72.0	12.5	12.5	12.5	10	10	12.5	12.5	12.5	5	7	12.5	12.5	9	3	5	12.5	12.5	12.5	11	12.5	12.5	12.5	12.5	5	8	12.5	12.5	9	4	6.25
		92.0	12.5	12.5	12.5	7	8	12.5	12.5	9	3	5	12.5	8	5		4	12.5	12.5	12.5	7	10	12.5	12.5	9	4	6.25	12.5	8	5		5
		200.0	12	6.25	4		3	11	5	3		3	11	5	3		3	12.5	6.25	4		4	11	5	3		4	11	5	3		4
	* 1/4 "Ø ELCO MALE/FEMALE "PANELMATE" W/ 1-3/4" MIN. EMBED. & 1/4-20 STAINLESS STEEL MACHINE SCREW WITH NUT **(MIN. 3,000 P.S.I. CONCRETE)**	48.0																12.5	12.5	12.5	12.5	12.5	12.5	12.5	12.5	9	12.5	12.5	12.5	12.5	6.25	9
		62.0																12.5	12.5	12.5	12.5	12.5	12.5	12.5	12.5	6.25	9	12.5	12.5	12.5	4	7
		72.0																12.5	12.5	12.5	10	12.5	12.5	12.5	12.5	5	8	12.5	12.5	9	3	6.25
		92.0																12.5	12.5	12.5	7	10	12.5	12.5	9	3	6.25	12.5	7	4		5
		200.0																11	6.25	4		4	10	5	3		4	10	5	3		4
	* 1/4 "Ø ALL POINTS SOLID-SET ANCHOR W/ 7/8" EMBED. & 1/4-20 STAINLESS STEEL MACHINE SCREW **(MIN. 3,000 P.S.I. CONCRETE)**	48.0	12.5	12.5	12.5	12.5	12.5	12.5	12.5	12.5	7	11	12.5	12.5	12.5	5	9	12.5	12.5	12.5	12.5	12.5	12.5	12.5	12.5	9	12.5	12.5	12.5	12.5	6.25	11
		62.0	12.5	12.5	12.5	10	12.5	12.5	12.5	12.5	5	8	12.5	12.5	12.5	3	6.25	12.5	12.5	12.5	12.5	12.5	12.5	12.5	12.5	6.25	11	12.5	12.5	12.5	4	9
		72.0	12.5	12.5	12.5	8	12	12.5	12.5	12.5	4	7	12.5	12.5	7		6	12.5	12.5	12.5	10	12.5	12.5	12.5	12.5	5	9	12.5	12.5	9	3	7
		92.0	12.5	12.5	12.5	5	9	12.5	12.5	7		6	10	6	3		4	12.5	12.5	12.5	7	12	12.5	12.5	9	3	7	12.5	7	4		6
		200.0	9	4	3		4	8	4			3	8	4			3	11	6.25	4		5	10	5	3		5	10	5	3		5
	1/4 "Ø ELCO TAPCOM W/ 1-1/2" MIN. EMBEDMENT **(MIN. 3,320 P.S.I. CONCRETE)**	48.0	12.5	12.5	12.5	12.5	12.5	12.5	12.5	12.5	6.25	10	12.5	12.5	12.5	4	8	12.5	12.5	12.5	12.5	12.5	12.5	12.5	12.5	8	12.5	12.5	12.5	12.5	5	10
		62.0	12.5	12.5	12.5	9	12.5	12.5	12.5	12.5	4	8	12.5	12.5	11	3	6.25	12.5	12.5	12.5	12	12.5	12.5	12.5	12.5	5	10	12.5	12.5	12.5	4	7
		72.0	12.5	12.5	12.5	7	10	12.5	12.5	12.5	3	6.25	11	11	6.25		5	12.5	12.5	12.5	9	12.5	12.5	12.5	12.5	4	8	12.5	12.5	8	3	6.25
		92.0	12.5	12.5	12.5	5	8	11	11	6.25		5	9	5	3		4	12.5	12.5	12.5	6.25	10	12.5	12.5	8	3	6.25	11	7	4		5
		200.0	8	4			3	7	3			3	7	3			3	10	5	3		4	9	4	3		4	9	4	3		4
HOLLOW CONCRETE BLOCK	1/4 "Ø ITW TAPCOM W/ 1-3/4" MIN. EMBEDMENT	48.0	10	10	10	5.6	5.6	7.2	7.2	7.2		3.2	5.6	5.6	5.6			10	10	10	7.2	7.2	8.8	8.8	8.8		4	6.4	6.4	6.4		3.2
		62.0	8.8	8.8	8.8	3.2	4	5.6	5.6	5.6			4	4	4			10	10	10	3.2	5.6	6.4	6.4	6.4		3.2	5	5	4		
		72.0	8	8	8		4	5	5	5			4	4				8.8	8.8	8.8		4.8	5.6	5.6	5.6			4	4			
		92.0	5.6	5.6	5.6		3.2	4	4				3					7.2	7.2	7.2		3.2	4	4				3.2				
		160.0	3					3					3					4					3					3				
	* 1/4 "Ø ELCO MALE/FEMALE "PANELMATE" W/ 1-3/4" MIN. EMBED. & 1/4-20 STAINLESS STEEL MACHINE SCREW WITH NUT	48.0																10	10	10	9.6	8	10	10	10	3.2	5	8.8	8.8	8.8		4
		62.0																10	10	10	5	6.4	8.8	8.8	8.8		4	7.2	7.2	5.6		3.2
		72.0																10	10	10	4	5.6	8	8	8		3.2	5.6	5.6	3.2		
		92.0																9.6	9.6	9.6		4	5.6	5.6	3.2			4.8				
		200.0																4					4					4				
	* 1/4 "Ø ALL POINTS SOLID-SET ANCHOR W/ 7/8" EMBED. & 1/4-20 STAINLESS STEEL MACHINE SCREW	48.0	10	10	10	10	10	10	10	10	5	6.4	10	10	10	3.2	5	10	10	10	10	10	10	10	10	5.6	8	10	10	10	3.2	6.4
		62.0	10	10	10	7.2	7.2	10	10	10	3.2	4.8	10	10	8		3.2	10	10	10	8	10	10	10	10	3.2	6.4	10	10	8.8		5
		72.0	10	10	10	5	6.4	10	10	10		4	8	8	4.8		3.2	10	10	10	5.6	8.8	10	10	10		5.6	8.8	8.8	5		4
		92.0	10	10	10	3.2	5	8	8	4.8		3.2	6.4	4				10	10	10	4	6.4	9.6	9.6	5		4	7.2	4			3.2
		200.0	5.6	3.2				5.6					5.6					6.4	3.2			3.2	5.6					5.6				
	1/4 "Ø ELCO TAPCOM W/ 1-1/2" MIN. EMBEDMENT	48.0	10	10	10	6.4	7.2	8	8	8		4	5.6	5.6	5.6		3.2	10	10	10	8	8.8	10	10	10		5.6	7.2	7.2	7.2		4
		62.0	9.6	9.6	9.6	3.2	5.6	5.6	5.6	5.6		3.2	4.8	4.8	4		2.4	10	10	10	4	7.2	7.2	7.2	7.2		4	5.6	5.6	5		3.2
		72.0	8	8	8		4.8	5	5	5			4	4			2.4	10	10	10	3.2	5.6	6.4	6.4	6.4		3.2	5	5			
		92.0	6.4	6.4	6.4		3.2	4	4				3.2					8	8	8		4.8	5	5				4				
		160.0	3					3					3					4					4					4				
		200.0																3.2					3.2					3.2				

ANCHOR SCHEDULE

FASTENER MAXIMUM SPACING (INCHES) REQUIRED FOR VARIOUS DESIGN LOADS AND SPANS

EXIST. STRUC.	ANCHOR TYPE	LOAD (W) P.S.F. MAX. (SEE NOTE 1)	MIN. 3/4" EDGE DISTANCE														
			SPANS UP TO 5'-6" (SEE NOTE 1)					SPANS UP TO 8'-6" (SEE NOTE 1)					SPANS UP TO 11'-0" (SEE NOTE 1)				
			CONNECTION TYPE (SEE NOTE 3)					CONNECTION TYPE (SEE NOTE 3)					CONNECTION TYPE (SEE NOTE 3)				
			C1	C2	C3	C4	C5	C1	C2	C3	C4	C5	C1	C2	C3	C4	C5
WOOD	1/4"Ø x MIN. 3" LONG LAG SCREW W/ MIN. 2" EMBED. SHEAR PARALLEL OR PERP. TO WOOD GRAIN	48.0	11	11	11	11	11	11	11	11	11	10	11	11	11	8	7
		62.0	11	11	11	11	11	11	11	11	8	7	11	11	11	6	6
		72.0	11	11	11	11	10	11	11	11	7	6	11	11	11	5	5
		92.0	11	11	11	9	8	11	11	11	5	5	11	10	6	3	4
		200.0	11	8	5	3	3	11	7	4	3	3	11	7	4	3	3
	* 7/16"Ø WOOD BUSHING W/ 5/8" MIN. EMBED. & 1/4-20 STAINLESS STEEL MACHINE SCREW	48.0	6.25	6.25	6.25	6.25		6.25	6.25	6.25	3		6.25	6.25	6.25		
		62.0	6.25	6.25	6.25	5		6.25	6.25	6.25			6.25	6.25	6		
		72.0	6.25	6.25	6.25	3		6.25	6.25	6.25			6	6	3		
		92.0	6.25	6.25	6.25			6	6	3			4				
		200.0	4					4					4				

TABLE 2

MIN. SEPARATION FROM GLASS SCHEDULE

POSITIVE DESIGN LOAD (W) (P.S.F.)	MAX. PANEL LENGTH (FT. – IN.)	MIN. SEPARATION FOR INSTALLATIONS LESS THAN 30' ABOVE GRADE (IN.)			MIN. SEPARATION FOR INSTALLATIONS GREATER THAN 30' ABOVE GRADE (IN.)
		SYSTEMS 1 & 2		SYSTEM 3	
		MIDSPAN TUBE	MIDSPAN BOLTS	NO MIDSPAN BOLTS OR TUBE REQUIRED	ALL CONDITIONS
40.0	5 – 7	2-1/4	2-3/8	3-1/2	1-1/8
	8 – 5	2-1/4	2-3/8	3-1/2	1-5/8
	8 – 8	3	3	3-1/2	1-3/4
	11 – 0	3	3	N / A	2-7/8
50.0	5 – 7	2-1/4	2-3/8	3-1/2	1-1/4
	8 – 5	2-1/4	2-3/8	3-1/2	1-7/8
	8 – 8	3	3	3-1/2	1-7/8
	10 – 6	3	3	N / A	3
60.0	5 – 7	2-1/4	2-3/8	3-1/2	1-1/4
	8 – 5	2-1/4	2-3/8	3-1/2	2
	8 – 8	3	3	3-1/2	2-1/8
	10 – 1	3	3	N / A	3
70.0	5 – 7	2-1/4	2-3/8	3-1/2	1-1/4
	8 – 5	2-1/4	2-3/8	3-1/2	2-1/8
	8 – 8	3	3	3-1/2	2-1/4
	9 – 9	3	3	N / A	3

N / A DESIGNATES CONDITIONS WHICH ARE NOT ACCEPTABLE USES.

ANCHOR NOTES:

1. **SPANS AND LOADS SHOWN HERE ARE FOR DETERMINING ANCHOR SPACING ONLY. ALLOWABLE STORM PANEL SPANS FOR SPECIFIC LOADS MUST BE LIMITED TO THOSE SHOWN IN TABLE 1.**
2. ENTER ANCHOR SCHEDULE BASED ON THE EXISTING STRUCTURE MATERIAL, ANCHOR TYPE AND EDGE DISTANCE. SELECT DESIGN LOAD GREATER THAN OR EQUAL TO NEGATIVE DESIGN LOAD ON SHUTTER AND SELECT SPAN GREATER THAN OR EQUAL TO SHUTTER SPAN.
3. SEE MOUNTING SECTION DETAILS FOR IDENTIFICATION OF CONNECTION TYPE.
4. EXISTING STRUCTURE MAY BE CONCRETE, HOLLOW BLOCK OR WOOD FRAMING. REFERENCE ANCHOR SCHEDULE FOR PROPER ANCHOR TYPE BASED ON TYPE OF EXISTING STRUCTURE.
5. ANCHORS SHALL BE INSTALLED IN ACCORDANCE WITH MANUFACTURERS' RECOMMENDATIONS.
6. MINIMUM EMBEDMENT AND EDGE DISTANCE EXCLUDES WALL FINISH OR STUCCO.
7. WHERE EXISTING STRUCTURE IS WOOD FRAMING, WOOD FRAMING CONDITIONS VARY. FIELD VERIFY THAT FASTENERS ARE INTO ADEQUATE WOOD FRAMING MEMBERS, NOT PLYWOOD. FASTENING TO PLYWOOD IS ACCEPTABLE ONLY FOR SIDE CLOSURE PIECES.
8. WHERE LAG SCREWS FASTEN TO NARROW FACE OF STUD FRAMING, FASTENER SHALL BE LOCATED IN CENTER OF NOMINAL 2" x 4" (MIN.) WOOD STUD. 3/4" EDGE DISTANCE IS ACCEPTABLE FOR WOOD FRAMING. WOOD STUD SHALL BE "SOUTHERN PINE" G=0.55 OR GREATER DENSITY. LAG SCREWS SHALL HAVE PHILLIPS PAN HEAD OR HEX HEAD.
9. MACHINE SCREWS SHALL HAVE MINIMUM OF 1/2" ENGAGEMENT OF THREADS IN BASE ANCHOR AND MAY HAVE A WAFER HEAD (SIDEWALK BOLT), U.O.N.
10. [hatched box] DESIGNATES ANCHOR CONDITIONS WHICH ARE NOT ACCEPTABLE USES.
11. * DESIGNATES ANCHORS WHICH ARE REMOVABLE BY REMOVING MACHINE SCREW, NUT OR WASHERED WINGNUT.

PRODUCT REVISED
as complying with the Florida
Building Code
Acceptance No 20-1102.15
Expiration Date 01/04/2024
By [signature]
Miami Dade Product Control

YIPING WANG LICENSE No 55983 STATE OF FLORIDA PROFESSIONAL ENGINEER

YIPING WANG, P.E.
FLORIDA REGISTRATION
PE #55983
CA N. 2867

October 28th, 2020

REVISIONS		
NO	DATE	DESCRIPTION
1	05-27-15	UPDATED TO 2014 FBC
2	09/27/17	UPDATED TO 2017 FBC
3	10/28/20	UPDATED TO 2020 FBC

MCY ENGINEERING, INC.
GLAZING CONSULTANTS
12781 MIRAMAR PKWY. STE.301 P: 305.271.0117
MIRAMAR, FL 33027 P: 786.3602786
www.MCYEngineering.com mcy@mcyengineering.com

20 GA. GALVANIZED STEEL STORM PANEL - LMI

FLORIDA STORM PANEL SUPPLY, LLC.
14475 N.W. 26TH AVE.
OPA LOCKA, FL. 33054
P: (305) 685 - 9000 F: (305) 685 - 7511

DATE	06-02-15
SCALE	AS NOTED
DRAWN	S.L.
PROJECT	MCY 12-073
DRAWING NO.	AD12-31