MIAMI-DADE COUNTY
DEPARTMENT OF REGULATORY AND ECONOMIC RESOURCES (RER)
BOARD AND CODE ADMINISTRATION DIVISION

MIAMI-DADE COUNTY
PRODUCT CONTROL SECTION
11805 SW 26 Street, Room 208
Miami, Florida 33175-2474
T (786) 315-2590 F (786) 315-2599
www.miamidade.gov/economy

NOTICE OF ACCEPTANCE (NOA)

Eco Window Systems, LLC
8502 NW 80 Street
Medley, Florida 33166

SCOPE:
This NOA is being issued under the applicable rules and regulations governing the use of construction materials. The documentation submitted has been reviewed and accepted by Miami-Dade County RER-Product Control Section to be used in Miami Dade County and other areas where allowed by the Authority Having Jurisdiction (AHJ).

This NOA shall not be valid after the expiration date stated below. The Miami-Dade County Product Control Section (In Miami Dade County) and/or the AHJ (in areas other than Miami Dade County) reserve the right to have this product or material tested for quality assurance purposes. If this product or material fails to perform in the accepted manner, the manufacturer will incur the expense of such testing and the AHJ may immediately revoke, modify, or suspend the use of such product or material within their jurisdiction. RER reserves the right to revoke this acceptance if it is determined by Miami-Dade County Product Control Section that this product or material fails to meet the requirements of the applicable building code.

This product is approved as described herein and has been designed to comply with the High Velocity Hurricane Zone of the Florida Building Code.

DESCRIPTION: Series 1000 Aluminum & Glass Railing System

APPROVAL DOCUMENT: Drawing No. 18-34D, titled "**Series 1000 Aluminum & Glass Railing System**", sheets 1 through 7 of 7, including 2.1, 2.2, 4.1, 6.1, 7.1, prepared by Al-Farooq Corp., dated March 06, 2018, last revision #B dated January 25, 2021, signed and sealed by Jalal Farooq, P.E., on February 12, 2021, bearing Miami-Dade County Product Control Revision stamp with the Notice of Acceptance number and the expiration date by the Miami-Dade County Product Control Section.

MISSILE IMPACT RATING: Large and Small Missile Impact

LABELING: Each unit shall bear a permanent label with the manufacturer's name or logo, city, state and the following statement: "Miami-Dade County Product Control Approved", unless otherwise noted herein.

RENEWAL of this NOA shall be considered after a renewal application has been filed and there has been no change in the applicable building code negatively affecting the performance of this product.

TERMINATION of this NOA will occur after the expiration date or if there has been a revision or change in the materials, use, and/or manufacture of the product or process. Misuse of this NOA as an endorsement of any product, for sales, advertising or any other purposes shall automatically terminate this NOA. Failure to comply with any section of this NOA shall be cause for termination and removal of NOA.

ADVERTISEMENT: The NOA number preceded by the words Miami-Dade County, Florida, and followed by the expiration date may be displayed in advertising literature. If any portion of the NOA is displayed, then it shall be done in its entirety.

INSPECTION: A copy of this entire NOA shall be provided to the user by the manufacturer or its distributors and shall be available for inspection at the job site at the request of the Building Official. The structural adequacy of the supporting structures is not part of this approval & shall be reviewed by the corresponding Building Dept.

This NOA **revises NOA #18-0516.04** and consists of this page 1, evidence submitted page E-1 as well as approval document mentioned above.
The submitted documentation was reviewed by **Helmy A. Makar, P.E., M.S.**

MIAMI-DADE COUNTY APPROVED

Helmy A. Makar
06/10/2021

NOA No. 21-0219.09
Expiration Date: 03/14/2024
Approval Date: 06/10/2021

Eco Window Systems, LLC

NOTICE OF ACCEPTANCE: EVIDENCE SUBMITTED

1. EVIDENCE SUBMITTED UNDER PREVIOUS APPROVAL # 18-0516.04

A. DRAWINGS

1. *Drawing No. 18-34D, titled "**Series 1000 Aluminum & Glass Railing System**", sheets 1 through 7 of 7, prepared by Al-Farooq Corp., dated March 06, 2018, signed and sealed by Javad Ahmad, P.E., on May 03, 2018.*

B. TESTS

1. *Test Report No. FTL-17799, by Fenestration Testing Laboratory, Inc., dated 12/18/2017, signed and sealed by Idalmis Ortega, P.E., testing Series 1000 Glass Railing System for concentrated loads per FBC 1618.4.8, Impacts per NSI Z97.1, Static Wind Load per TAS 202-94.*

C. CALCULATIONS

1. *Calculation titled " Series 1000 Aluminum and Glass Railing ", sheets TR-1, G-1, SC-1 thru SC-5, GR-1 thru GR-14, and CA-1 thru CA-4, dated May 04, 2018, prepared by Al-farooq Corporation, signed and sealed by Javad Ahmad, P.E.*

D. QUALITY ASSURANCE

1. *By Miami-Dade County Department of Regulatory and Economic Resources (RER).*

E. MATERIAL CERTIFICATIONS

1. *None.*

2. NEW EVIDENCE SUBMITTED

A. DRAWINGS

1. *Drawing No. 18-34D, titled "**Series 1000 Aluminum & Glass Railing System**", sheets 1 through 7 of 7, including 2.1, 2.2, 4.1, 6.1, 7.1, prepared by Al-Farooq Corp., dated March 06, 2018, last revision #B dated January 25, 2021.*

B. TESTS

1. *Test Report No. FTL-20-1080, by Fenestration Testing Laboratory, Inc., dated 10/07/2020, signed and sealed by Idalmis Ortega, P.E., testing Series 1000 Glass Railing System for concentrated loads per FBC 1618.4.8, Impacts per NSI Z97.1, Static Wind Load per TAS 202-94.*

C. CALCULATIONS

1. *Calculation titled "Series 1000 Aluminum and Glass Railing", 21 sheets, dated January 22, 2021, prepared by Al-farooq Corporation, signed and sealed by Jalal Farooq, P.E.*

D. QUALITY ASSURANCE

1. *By Miami-Dade County Department of Regulatory and Economic Resources (RER).*

E. MATERIAL CERTIFICATIONS

1. *None.*

Helmy A. Makar, P.E., M.S.
Product Control Section Supervisor
NOA No. 21-0219.09
Expiration Date: 03/14/2024
Approval Date: 06/10/2021

CHART #1

* POST HOLE CHART (RAILING HEIGHT = 45 IN.)				
STANDARD POSTS				
CONCRETE STRENGTH	POST EMBED.	HOLE SIZE	POST SPACING	LOAD CAPACITY PSF
3000 PSI	4 IN.	5 IN. DIA.	36 IN.	77.2
			42 IN.	66.2
			48 IN.	57.9
		6 IN. DIA.	36 IN.	92.6
			42 IN.	79.4
			48 IN.	69.5
4000 PSI	4 IN.	5 IN. DIA.	36 IN.	102.9
			42 IN.	88.2
			48 IN.	77.2
		6 IN. DIA.	36 IN.	120.0
			42 IN.	105.9
			48 IN.	92.6
5000 PSI	4 IN.	5 IN. DIA.	36 IN.	120.0
			42 IN.	110.3
			48 IN.	96.5
		6 IN. DIA.	36 IN.	120.0
			42 IN.	119.9
			48 IN.	104.9
5000 PSI	4-1/4 IN.	5 IN. DIA.	36 IN.	120.0
			42 IN.	110.3
			48 IN.	96.5
		6 IN. DIA.	36 IN.	120.0
			42 IN.	120.0
			48 IN.	115.8

CHART #2

* POST HOLE CHART (RAILING HEIGHT = 45 IN.)				
VARIABLE ANGLE POSTS WITHOUT BRIDGE				
CONCRETE STRENGTH	POST EMBED.	HOLE SIZE	POST SPACING	LOAD CAPACITY PSF
3000 PSI	4 IN.	5 IN. DIA.	36-3/4 IN.	75.4
			42-1/2 IN.	65.2
		6 IN. DIA.	36-3/4 IN.	87.0
			42-1/2 IN.	75.3
4000 PSI	4 IN.	5 IN. DIA.	36-3/4 IN.	100.5
			42-1/2 IN.	86.9
		6 IN. DIA.	36-3/4 IN.	107.9
			42-1/2 IN.	93.3
5000 PSI	4 IN.	5 IN. DIA.	36-3/4 IN.	107.9
			42-1/2 IN.	93.3
		6 IN. DIA.	36-3/4 IN.	107.9
			42-1/2 IN.	93.3
5000 PSI	4-1/4 IN.	5 IN. DIA.	36-3/4 IN.	120.0
			42-1/2 IN.	104.5
		6 IN. DIA.	36-3/4 IN.	120.0
			42-1/2 IN.	104.5

CHART #2A

* POST HOLE CHART (RAILING HEIGHT = 45 IN.)				
VARIABLE ANGLE POSTS WITH BRIDGE				
CONCRETE STRENGTH	POST EMBED.	HOLE SIZE	POST SPACING	LOAD CAPACITY PSF
3000 PSI	4 IN.	6 IN. DIA.	36-3/4 IN.	87.0
4000 PSI				116.1
5000 PSI				120.0

* INSTRUCTIONS:

USE CHARTS AS FOLLOWS.

STEP 1 DETERMINE DESIGN WIND LOAD REQUIREMENTS BASED ON WIND VELOCITY, BLDG. HEIGHT, WIND ZONE USING APPLICABLE ASCE 7 STANDARD.

STEP 2 USE POST HOLE CHARTS TO CHECK POST SPACING AND DESIGN LOAD CAPACITY.

FOR STANDARD POSTS ON SHEETS 4 & 6 SEE CHART #1.

FOR VARIABLE ANGLE POSTS ON SHEETS 4.1 & 6.1 SEE CHART #2 OR 2A.

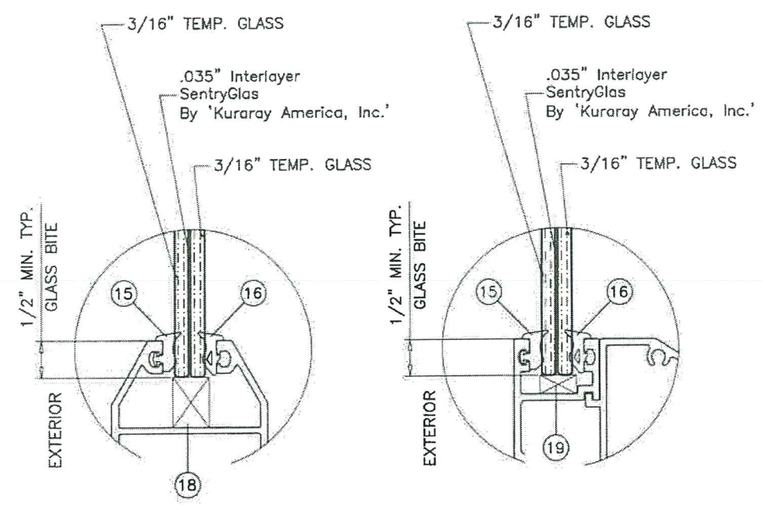

GLASS DETAILS

7/16" OVERALL LAM. GLASS

SERIES 1000
ALUMINUM AND GLASS RAILING SYSTEM

THIS PRODUCT HAS BEEN DESIGNED AND TESTED TO COMPLY WITH THE REQUIREMENTS OF THE 2020 (7TH EDITION) FLORIDA BUILDING CODE INCLUDING HIGH VELOCITY HURRICANE ZONE (HVHZ).

ANCHORS SHALL BE CORROSION RESISTANT, SPACED AS SHOWN ON DETAILS AND INSTALLED PER MANUF'S INSTRUCTIONS. SPECIFIED EMBEDMENT TO BASE MATERIAL SHALL BE BEYOND FLOOR DRESSING.

MATERIALS INCLUDING BUT NOT LIMITED TO STEEL/METAL SCREWS, THAT COME INTO CONTACT WITH OTHER DISSIMILAR MATERIALS SHALL MEET THE REQUIREMENTS OF THE 2020 FLORIDA BLDG. CODE & ADOPTED STANDARDS.

THIS PRODUCT APPROVAL IS GENERIC AND DOES NOT PROVIDE INFORMATION FOR A SITE SPECIFIC PROJECT, i.e. LIFE SAFETY OF THIS PRODUCT, ADEQUACY OF STRUCTURE RECEIVING THIS PRODUCT ETC.
CONDITIONS NOT SHOWN IN THIS DRAWING ARE TO BE ANALYZED SEPARATELY, AND TO BE REVIEWED BY BUILDING OFFICIAL.

DESIGN LOADS SHOWN ARE BASED ON 'ALLOWABLE STRESS DESIGN (ASD)'.

PRODUCT REVISED
as complying with the Florida Building Code
Acceptance No 21-0219.09
Expiration Date 03/14/2024
By
Miami Dade Product Control

JALAL FAROOQ LICENSE No. 81223 STATE OF FLORIDA PROFESSIONAL ENGINEER
FEB 12 2021

AL-FAROOQ CORPORATION
ENGINEERS & PRODUCT DEVELOPMENT
9360 SUNSET DRIVE, SUITE 220
MIAMI, FLORIDA 33173 (C.A.N. 3538)
TEL. (305) 264-8100 FAX. (305) 262-6978

RAILING\18-34D-ECO

SERIES 1000 ALUM & GLASS RAILING SYSTEM

ECO WINDOW SYSTEMS, LLC.
8502 N.W. 80th STREET
MEDLEY, FL. 33166
TEL. (305) 885-5299 FAX (305) 885-5902

revisions:

no	date	by	description
A	11.05.20		UPDATED TO 2020 FBC
B	01.25.21		GENERAL REVISION

date: 03-06-18
scale: 1/2" = 1"
dr. by: TARIQ
chk. by:

drawing no. 18-34D

sheet 1 of 7

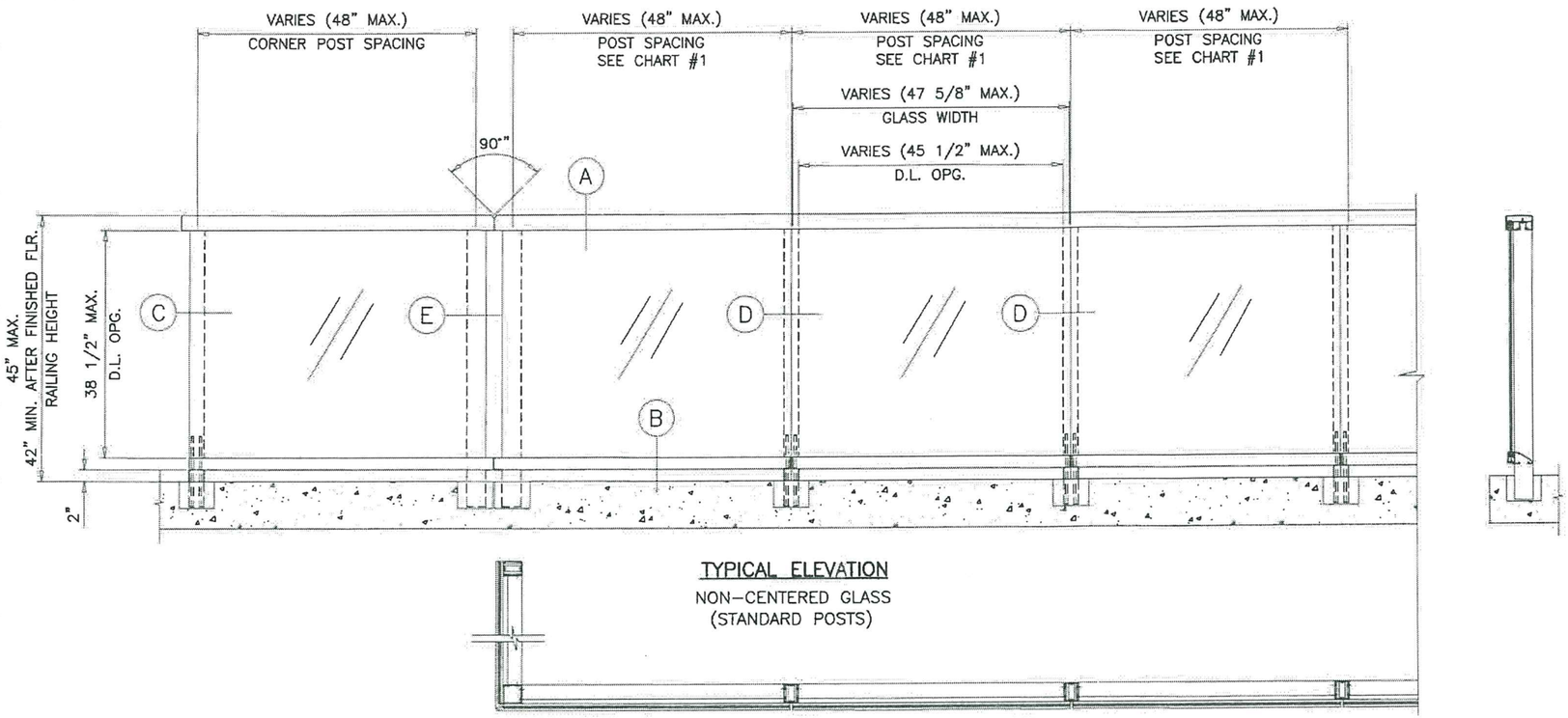

TYPICAL ELEVATION
NON-CENTERED GLASS
(STANDARD POSTS)

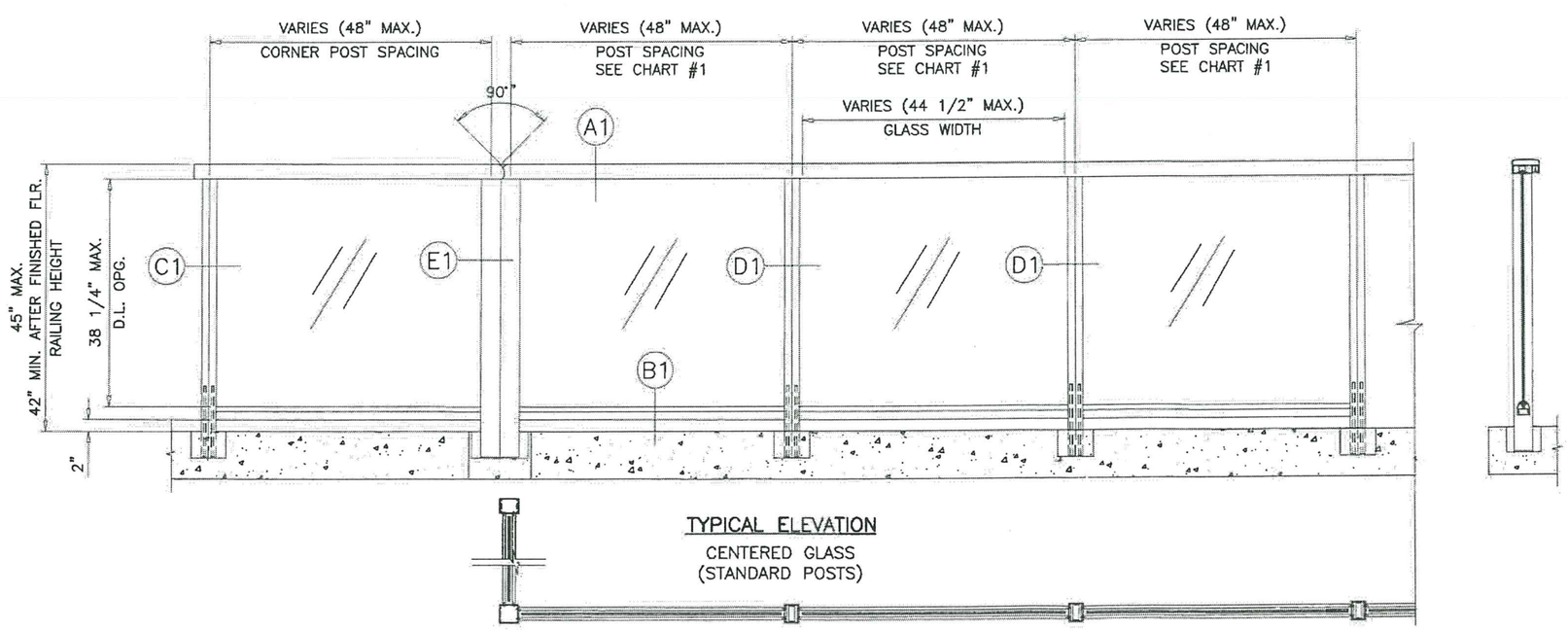

TYPICAL ELEVATION
CENTERED GLASS
(STANDARD POSTS)

PRODUCT REVISED
as complying with the Florida
Building Code
Acceptance No 21-0219.09
Expiration Date 03/14/2024
By Hedy A. Mehr
Miami Dade Product Control

JALAL FAROOQ
LICENSE
FEB 12 2021
No. 81223
STATE OF FLORIDA
PROFESSIONAL ENGINEER

AL-FAROOQ CORPORATION
ENGINEERS & PRODUCT DEVELOPMENT
9360 SUNSET DRIVE, SUITE 220
MIAMI, FLORIDA 33173 (C.A.N. 3538)
TEL. (305) 264-8100 FAX. (305) 262-6978

RAILING\18-34D-ECO

SERIES 1000 ALUM & GLASS RAILING SYSTEM

ECO WINDOW SYSTEMS, LLC.
8502 N.W. 80th STREET
MEDLEY, FL. 33166
TEL. (305) 885-5299 FAX (305) 885-5902

revisions:

no	date	by	description
A	11.05.20		UPDATED TO 2020 FBC
B	01.25.21		GENERAL REVISION

date: 03-06-18
scale: 1/2"=1'-0"
dr. by: TARIQ
chk. by:

drawing no.
18-34D

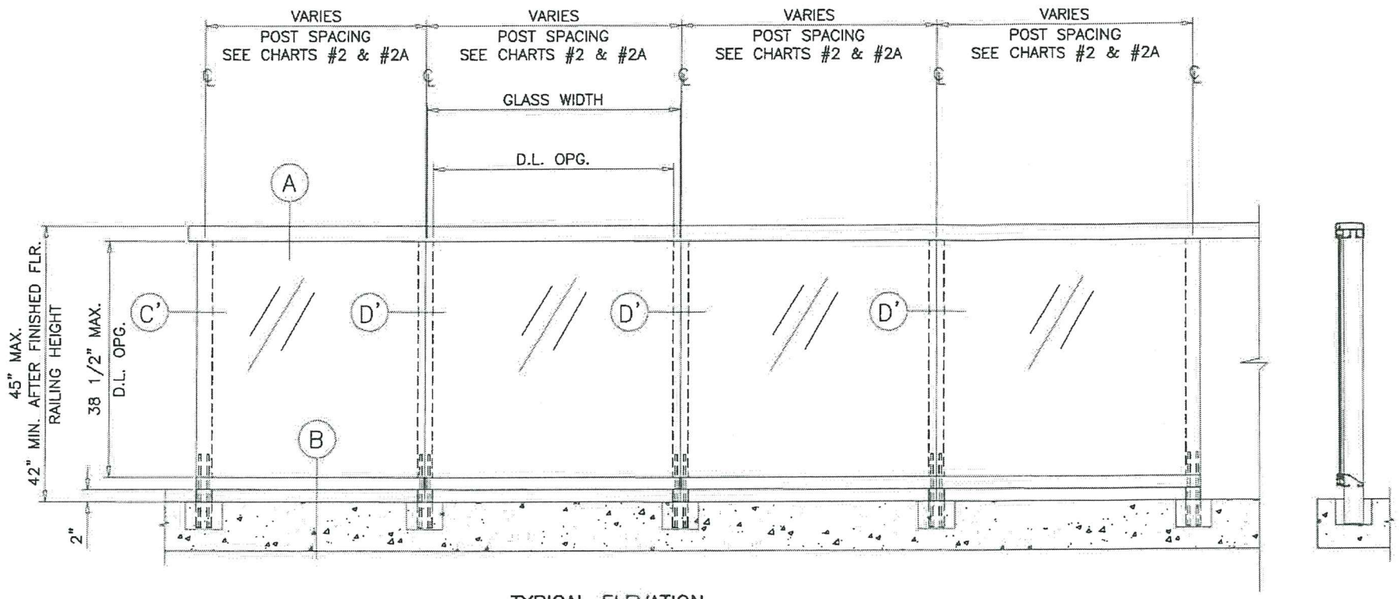

TYPICAL ELEVATION

NON-CENTERED GLASS
(VARIABLE ANGLE POSTS)

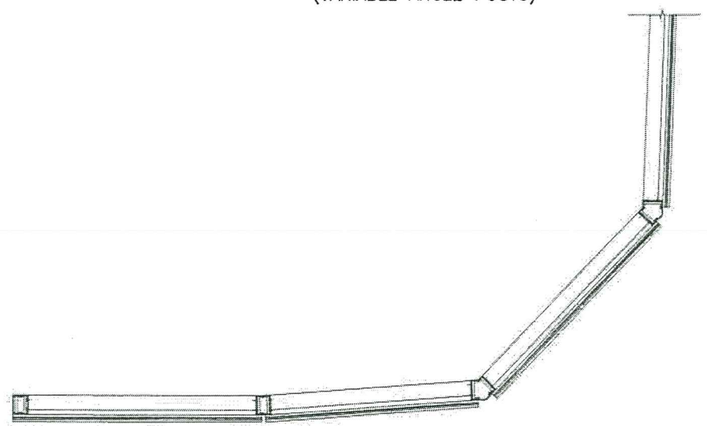

PRODUCT REVISED
as complying with the Florida
Building Code
Acceptance No 21-0218.09
Expiration Date 03/14/2024
By Hedy A. Mehr
Miami Dade Product Control

JALAL FAROOQ
LICENSE
No. 18722
FEB 12 2022
STATE OF FLORIDA
PROFESSIONAL ENGINEER

AL-FAROOQ CORPORATION
ENGINEERS & PRODUCT DEVELOPMENT
9360 SUNSET DRIVE, SUITE 220
MIAMI, FLORIDA 33173 (C.A.N. 3538)
TEL. (305) 264-8100 FAX. (305) 262-6978

RAILING\18-34D-ECO

SERIES 1000 ALUM & GLASS RAILING SYSTEM

ECO WINDOW SYSTEMS, LLC.
8502 N.W. 80th STREET
MEDLEY, FL. 33166
TEL. (305) 885-5299 FAX (305) 885-5902

revisions:

no	date	by	description
B	01.25.21		GENERAL REVISION

date: 03-06-18
scale: 1/2"=1'-0"
dr. by: TARIQ
chk. by:

drawing no.
18-34D

sheet 2.1 of 7

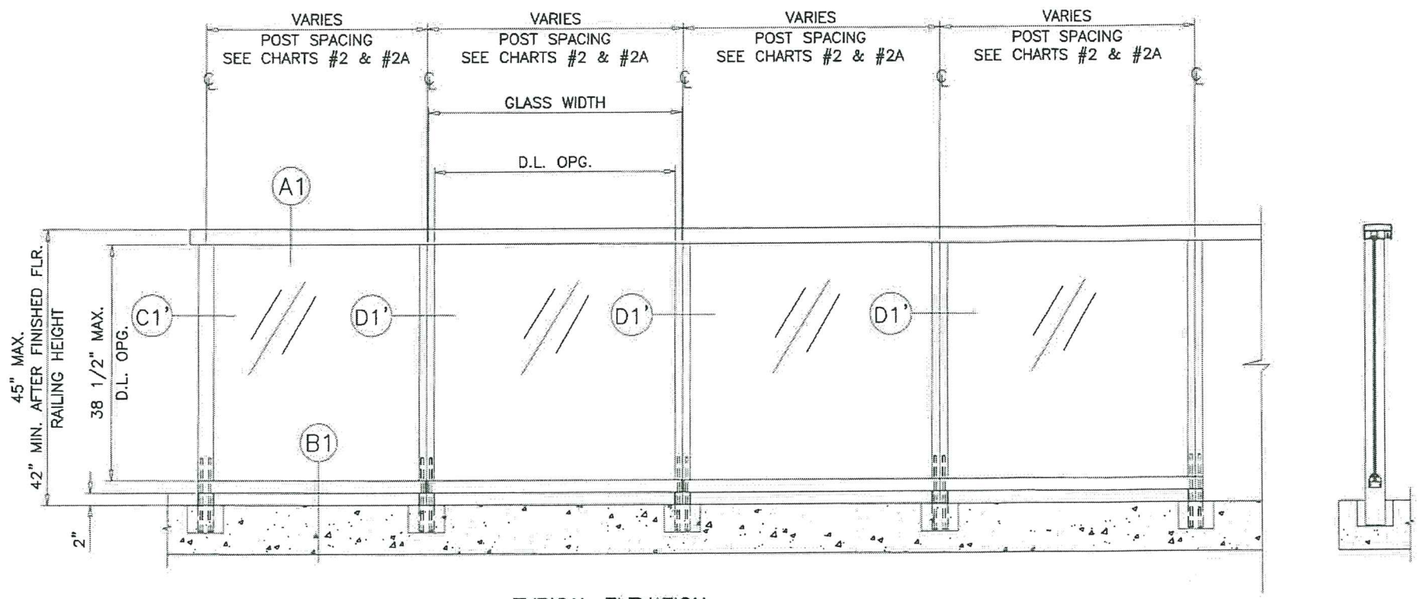

TYPICAL ELEVATION
CENTERED GLASS
(VARIABLE ANGLE POSTS)

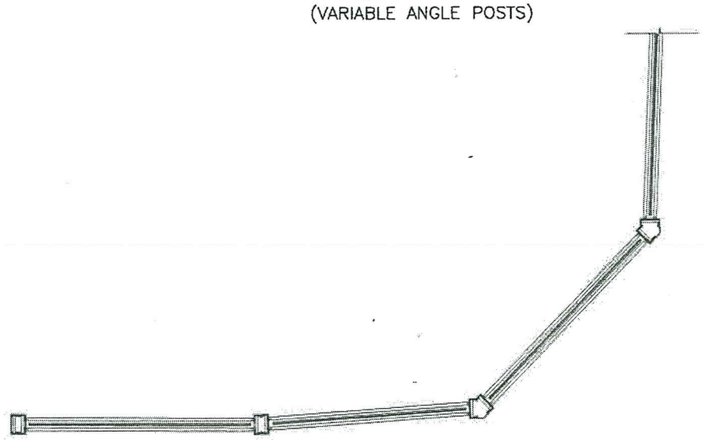

PRODUCT REVISED
as complying with the Florida
Building Code
Acceptance No 21-0219.09
Expiration Date 03/14/2024
By
Miami Dade Product Control

JALAL FAROOQ
LICENSE
No. 81223
STATE OF FLORIDA
PROFESSIONAL ENGINEER
FEB 12 2021

AL-FAROOQ CORPORATION
ENGINEERS & PRODUCT DEVELOPMENT
9360 SUNSET DRIVE, SUITE 220
MIAMI, FLORIDA 33173 (C.A.N. 3538)
TEL. (305) 264-8100 FAX. (305) 262-6978

RAILING\18-34D-ECO

SERIES 1000 ALUM & GLASS RAILING SYSTEM

ECO WINDOW SYSTEMS, LLC.
8502 N.W. 80th STREET
MEDLEY, FL. 33166
TEL. (305) 885-5299 FAX (305) 885-5902

revisions:

no	date	by	description
B	01.25.21		GENERAL REVISION

date: 03-06-18
scale: 1/2"=1'-0"
dr. by: TARIQ
chk. by:

drawing no.
18-34D

sheet 2.2 of 7

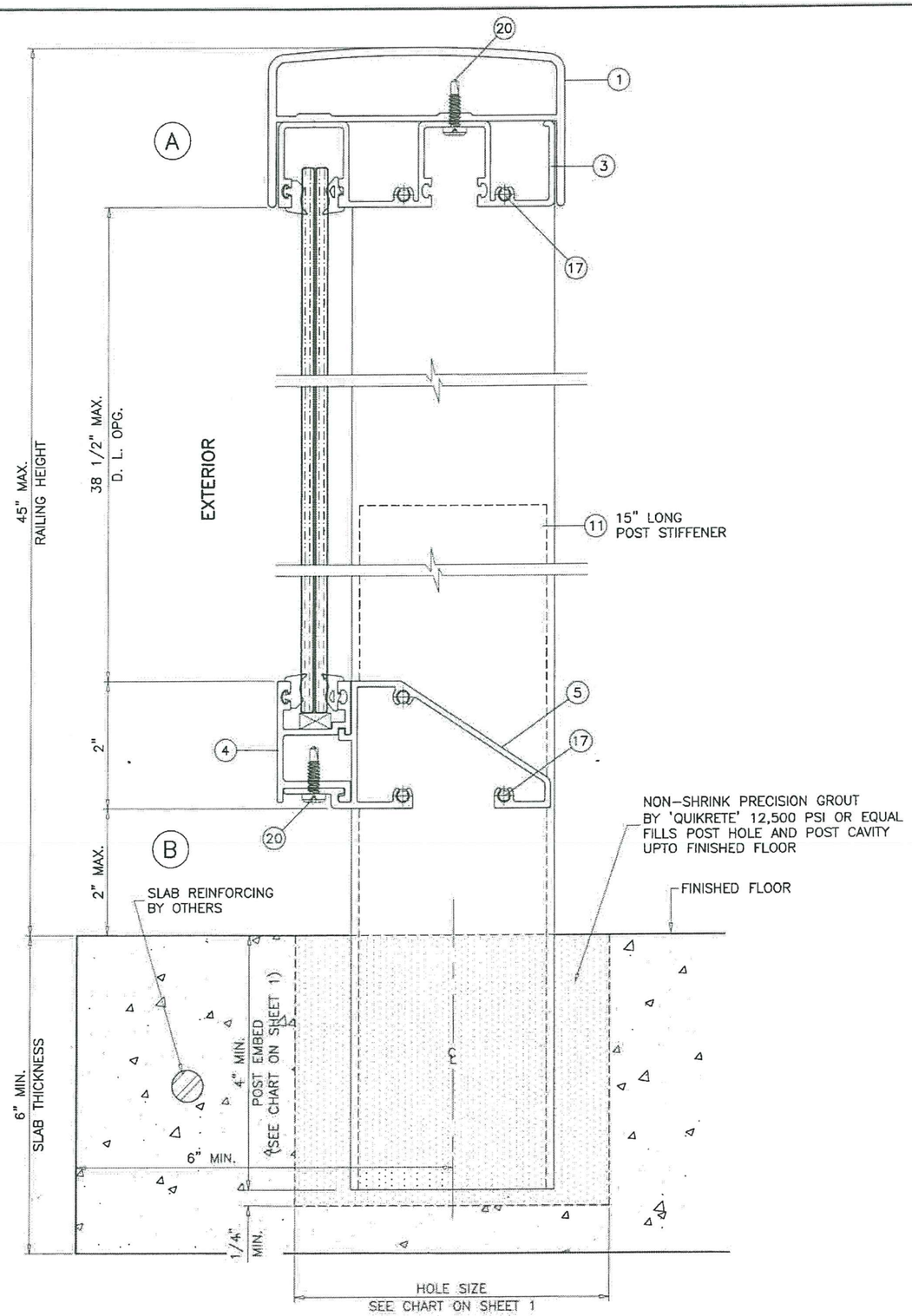

NON-CENTERED GLASS

PRODUCT REVISED
as complying with the Florida
Building Code
Acceptance No 21-0219.09
Expiration Date 03/14/2021
By
Miami Dade Product Control

JALAL FAROOQ
LICENSE
No. 81223
STATE OF FLORIDA
PROFESSIONAL ENGINEER
FEB 12 2021

AL-FAROOQ CORPORATION
ENGINEERS & PRODUCT DEVELOPMENT
9360 SUNSET DRIVE, SUITE 220
MIAMI, FLORIDA 33173 (C.A.N. 3538)
TEL. (305) 264-8100 FAX. (305) 262-6978

RAILING\18-34D-ECO

SERIES 1000 ALUM & GLASS RAILING SYSTEM

ECO WINDOW SYSTEMS, LLC.
8502 N.W. 80th STREET
MEDLEY, FL. 33166
TEL. (305) 885-5299 FAX (305) 885-5902

revisions:

no	date	by	description
A	11.05.20		UPDATED TO 2020 FBC
B	01.25.21		GENERAL REVISION

date: 03-06-18
scale: 1/2" = 1"
dr. by: TARIQ
chk. by: -

drawing no.
18-34D

sheet 3 of 7

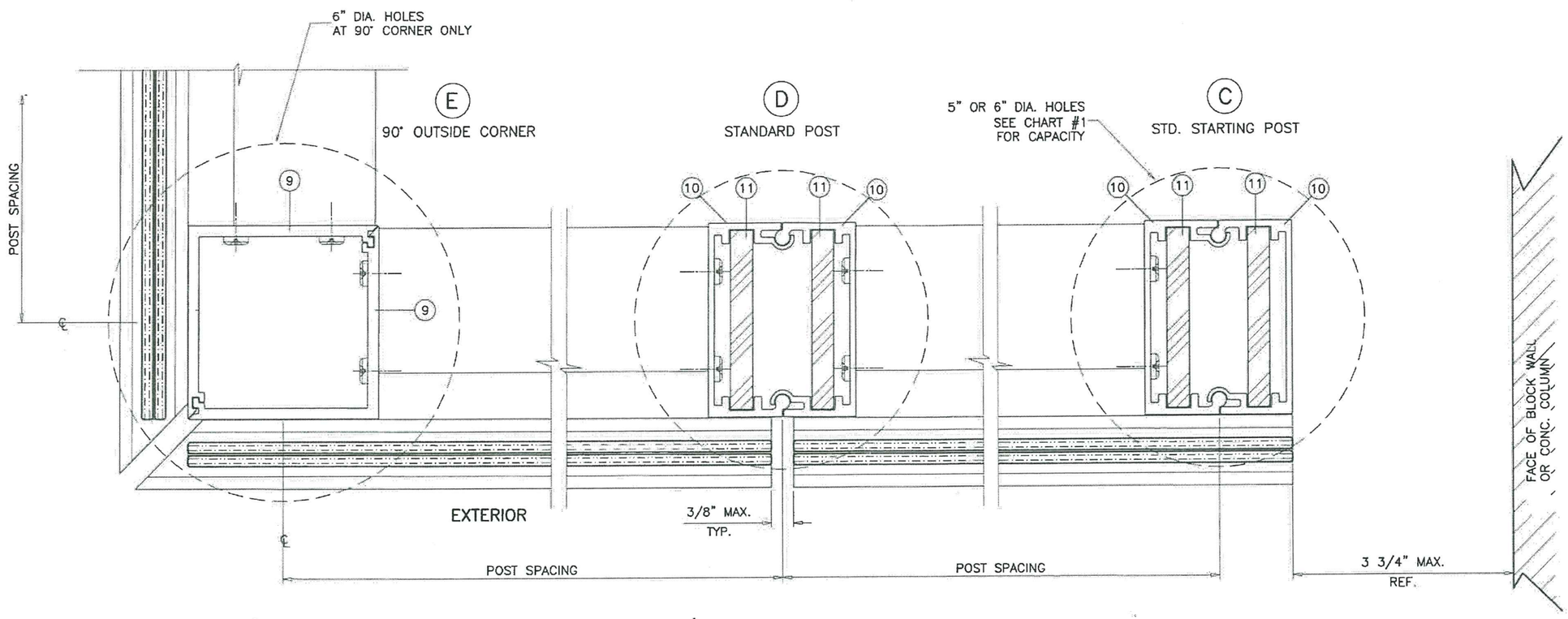

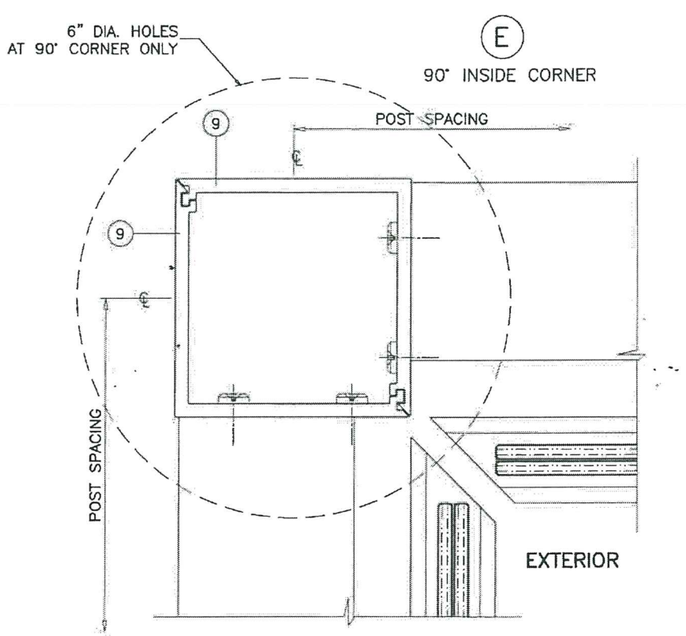

NON-CENTERED GLASS
STANDARD POSTS

PRODUCT REVISED
as complying with the Florida
Building Code
Acceptance No 21-0219.09
Expiration Date 03/14/2024
By
Miami Dade Product Control

JALAL FAROOQ
LICENSE
No. 81223
FEB 12 2023
STATE OF
FLORIDA
PROFESSIONAL ENGINEER

AL-FAROOQ CORPORATION
ENGINEERS & PRODUCT DEVELOPMENT
9360 SUNSET DRIVE, SUITE 220
MIAMI, FLORIDA 33173 (C.A.N. 3538)
TEL. (305) 264-8100 FAX. (305) 262-6978

RAILING\18-34D-ECO

SERIES 1000 ALUM & GLASS RAILING SYSTEM

ECO WINDOW SYSTEMS, LLC.
8502 N.W. 80th STREET
MEDLEY, FL. 33166
TEL. (305) 885-5299 FAX (305) 885-5902

revisions:

no	date	by	description
A	11.05.20		UPDATED TO 2020 FBC
B	01.25.21		GENERAL REVISION

date: 03-06-18
scale: 1/2" = 1"
dr. by: TARIQ
chk. by:

drawing no.
18-34D

sheet 4 of 7

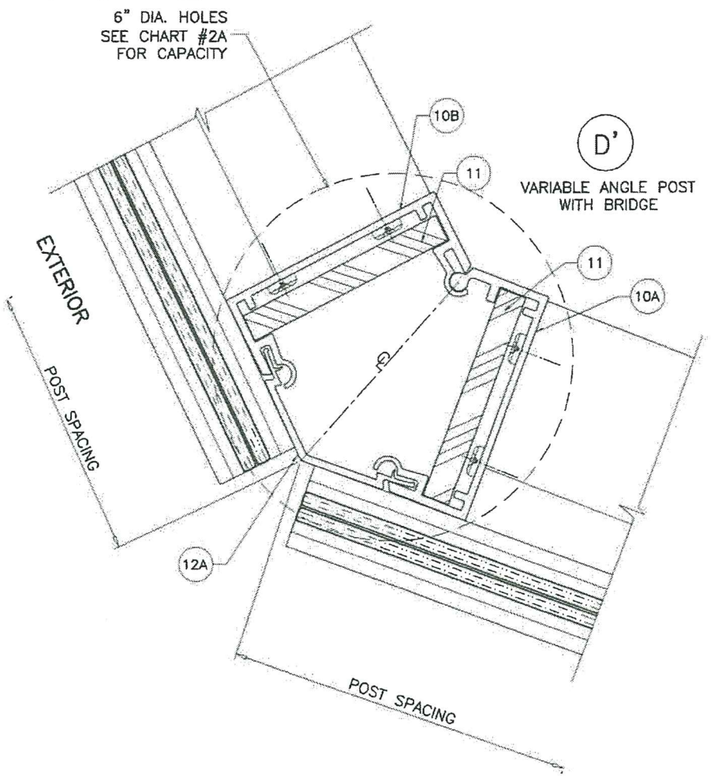

D'
VARIABLE ANGLE POST
WITH BRIDGE

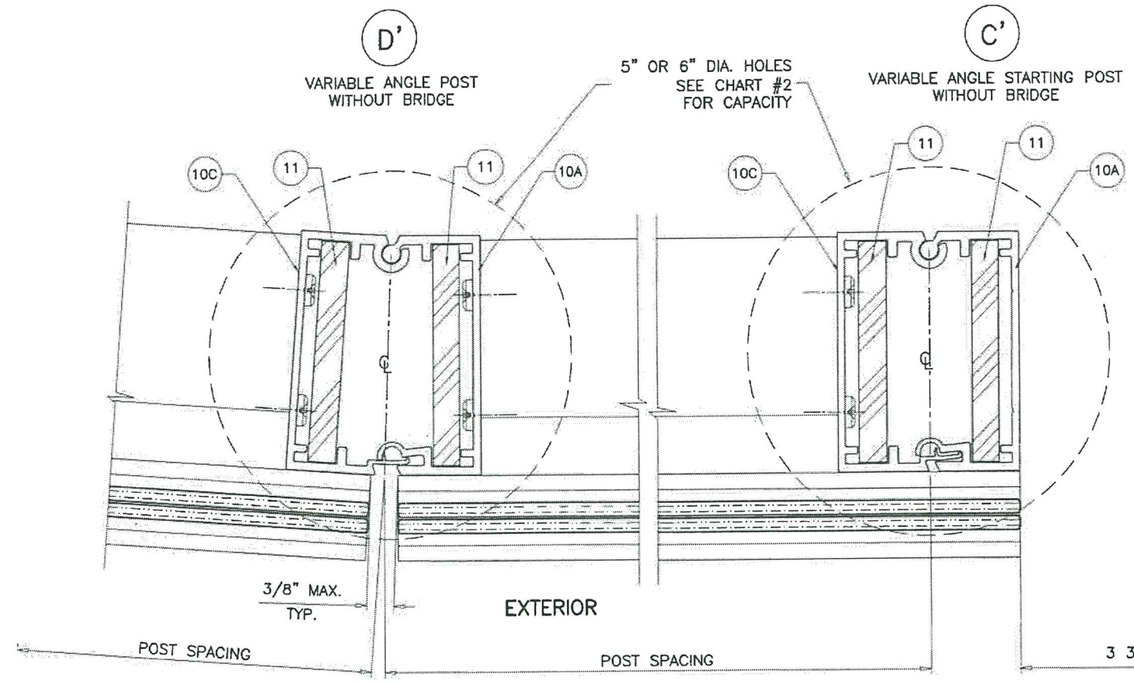

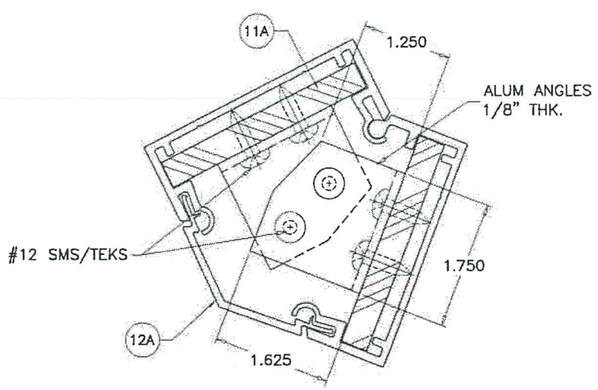

REINF. CLIPS AT TOP
135° BRIDGE ONLY

NON-CENTERED GLASS
VARIABLE ANGLE POSTS

PRODUCT REVISED
as complying with the Florida
Building Code
Acceptance No 21-0219.09
Expiration Date 03/14/2024
By
Miami Dade Product Control

JALAL FAROOQ
LICENSE
No. 81223
FEB 12 2021
STATE OF
FLORIDA
PROFESSIONAL ENGINEER

AL-FAROOQ CORPORATION
ENGINEERS & PRODUCT DEVELOPMENT
9360 SUNSET DRIVE, SUITE 220
MIAMI, FLORIDA 33173 (C.A.N. 3538)
TEL. (305) 264-8100 FAX. (305) 262-6978

RAILING\18-34D-ECO

SERIES 1000 ALUM & GLASS RAILING SYSTEM

ECO WINDOW SYSTEMS, LLC.
8502 N.W. 80th STREET
MEDLEY, FL. 33166
TEL. (305) 885-5299 FAX (305) 885-5902

revisions:

no	date	by	description
B	01.25.21		GENERAL REVISION

date: 03-06-18
scale: 1/2" = 1"
dr. by: TARIQ
chk. by:

drawing no.
18-34D

sheet 4.1 of 7

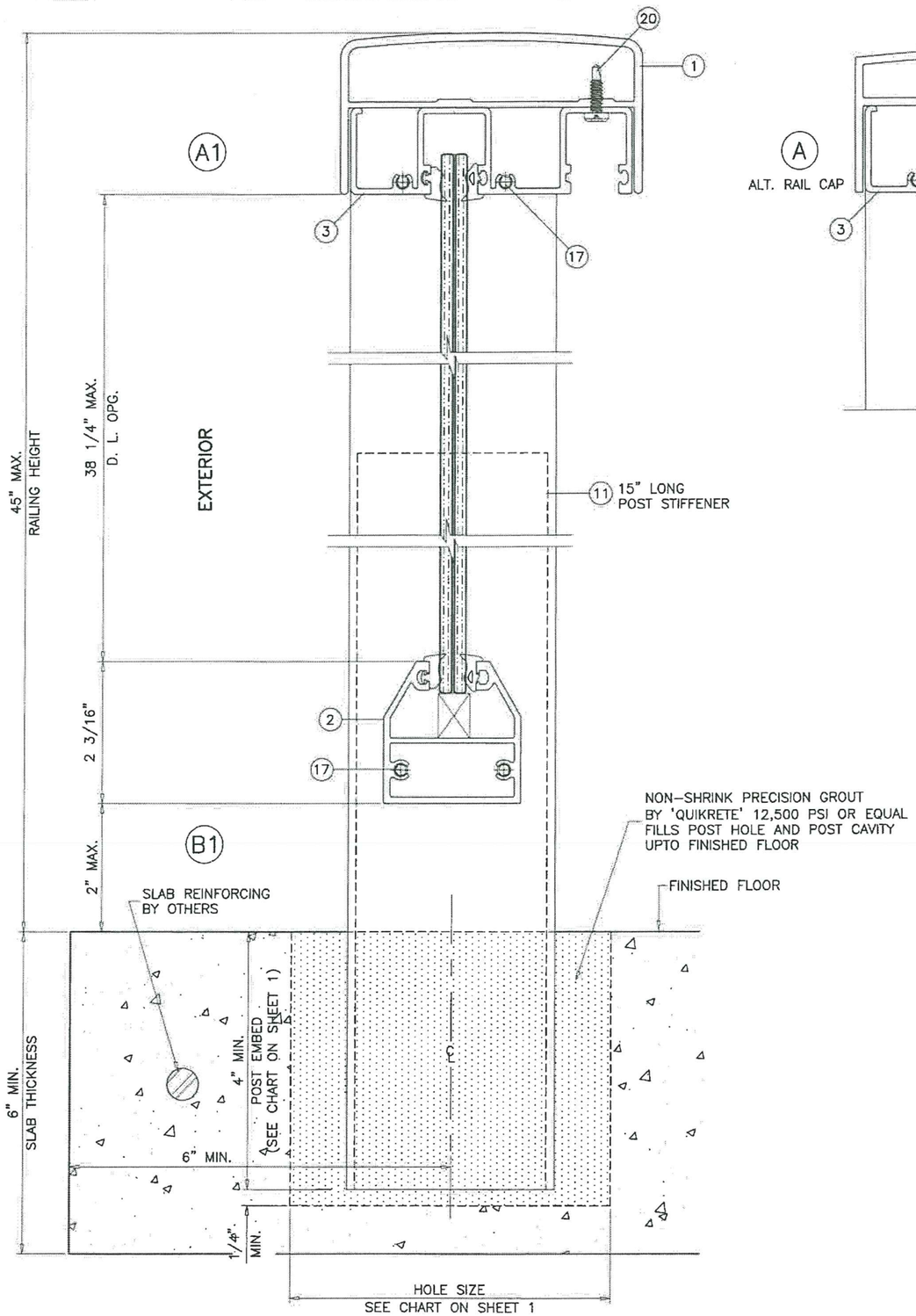

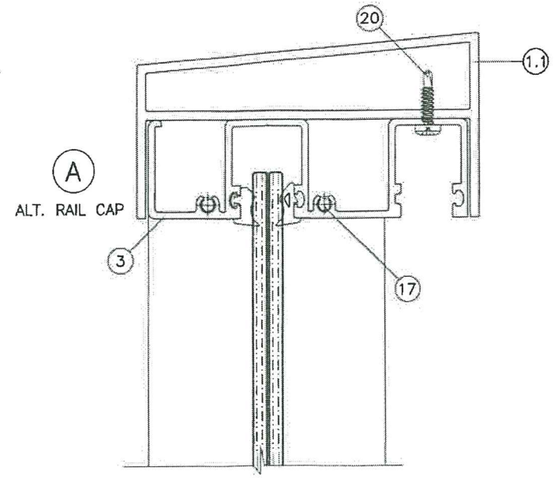

CENTERED GLASS

PRODUCT REVISED
as complying with the Florida
Building Code
Acceptance No. 21-0218.09
Expiration Date 03/14/2024
By Hedy A. Melo
Miami Dade Product Control

JALAL FAROOQ
LICENSE
No. 81223
FEB 12
STATE OF FLORIDA
PROFESSIONAL ENGINEER

AL-FAROOQ CORPORATION
ENGINEERS & PRODUCT DEVELOPMENT
9360 SUNSET DRIVE, SUITE 220
MIAMI, FLORIDA 33173 (C.A.N. 3538)
TEL. (305) 264-8100 FAX. (305) 262-6978

RAILING\18-34D-ECO

SERIES 1000 ALUM & GLASS RAILING SYSTEM

ECO WINDOW SYSTEMS, LLC.
8502 N.W. 80th STREET
MEDLEY, FL. 33166
TEL. (305) 885-5299 FAX (305) 885-5902

revisions:

no	date	by	description
A	11.05.20		UPDATED TO 2020 FBC
B	01.25.21		GENERAL REVISION

date: 03-06-18
scale: 1/2" = 1"
dr. by: TARIQ
chk. by:

drawing no.
18-34D

sheet 5 of 7

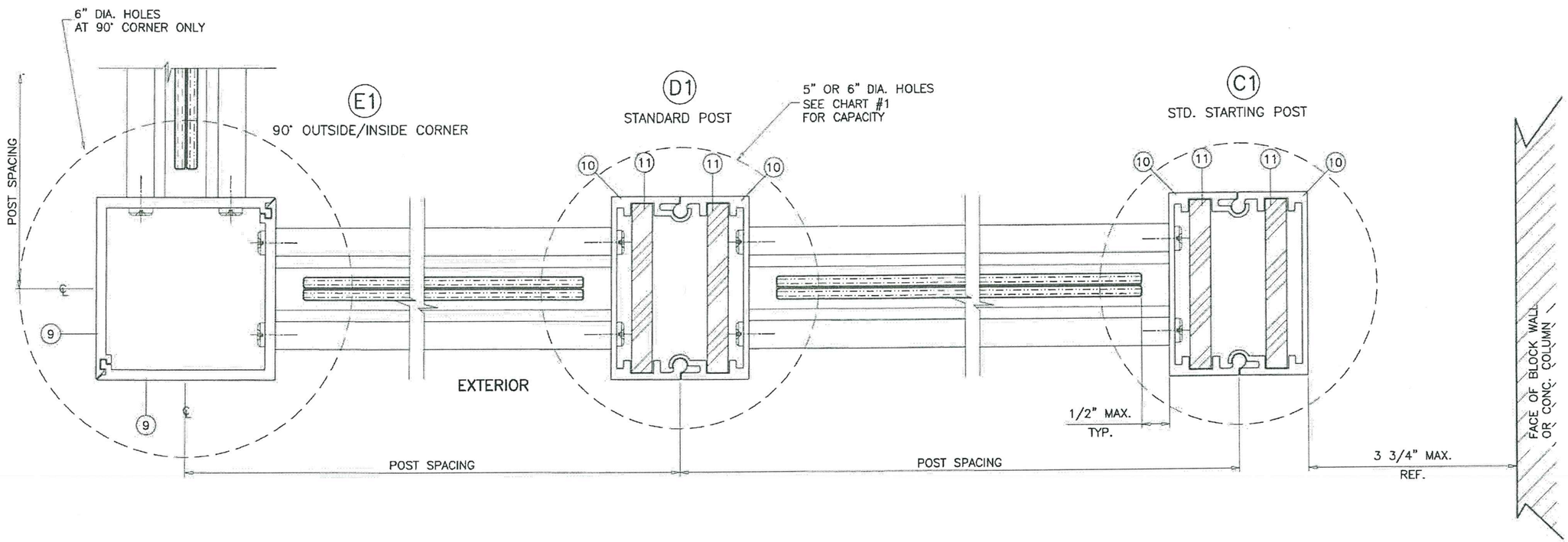

PRODUCT REVISED
as complying with the Florida
Building Code
Acceptance No 21-0219.04
Expiration Date 03/14/2024
By
Miami Dade Product Control

JALAL FAROOQ
LICENSE
No. 81223
FEB 12 2021
STATE OF FLORIDA
PROFESSIONAL ENGINEER

CENTERED GLASS
STANDARD POSTS

AL-FAROOQ CORPORATION
ENGINEERS & PRODUCT DEVELOPMENT
9360 SUNSET DRIVE, SUITE 220
MIAMI, FLORIDA 33173 (C.A.N. 3538)
TEL. (305) 264-8100 FAX. (305) 262-6978

RAILING\18-34D-ECO

SERIES 1000 ALUM & GLASS RAILING SYSTEM

ECO WINDOW SYSTEMS, LLC.
8502 N.W. 80th STREET
MEDLEY, FL. 33166
TEL. (305) 885-5299 FAX (305) 885-5902

revisions:

no	date	by	description
A	11.05.20		UPDATED TO 2020 FBC
B	01.25.21		GENERAL REVISION

date: 03-06-18
scale: 1/2" = 1"
dr. by: TARIQ
chk. by:

drawing no.
18-34D

sheet 6 of 7

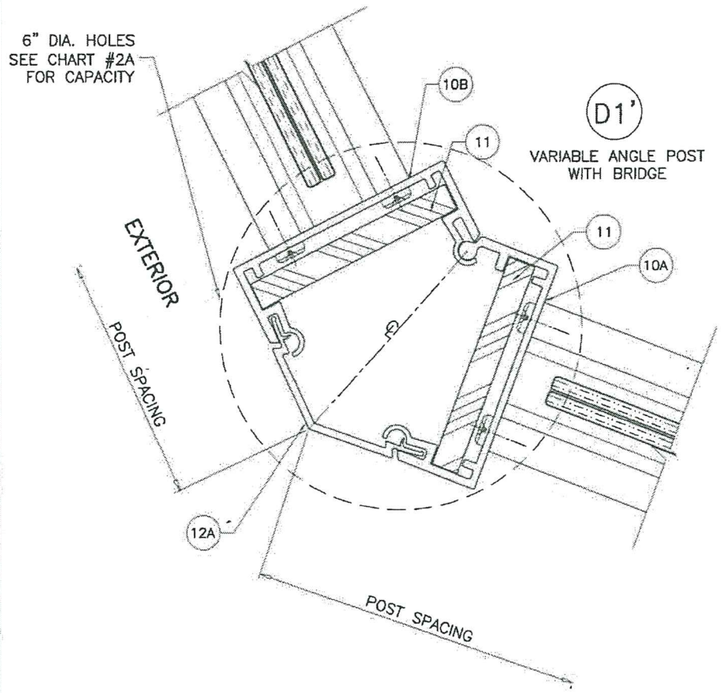

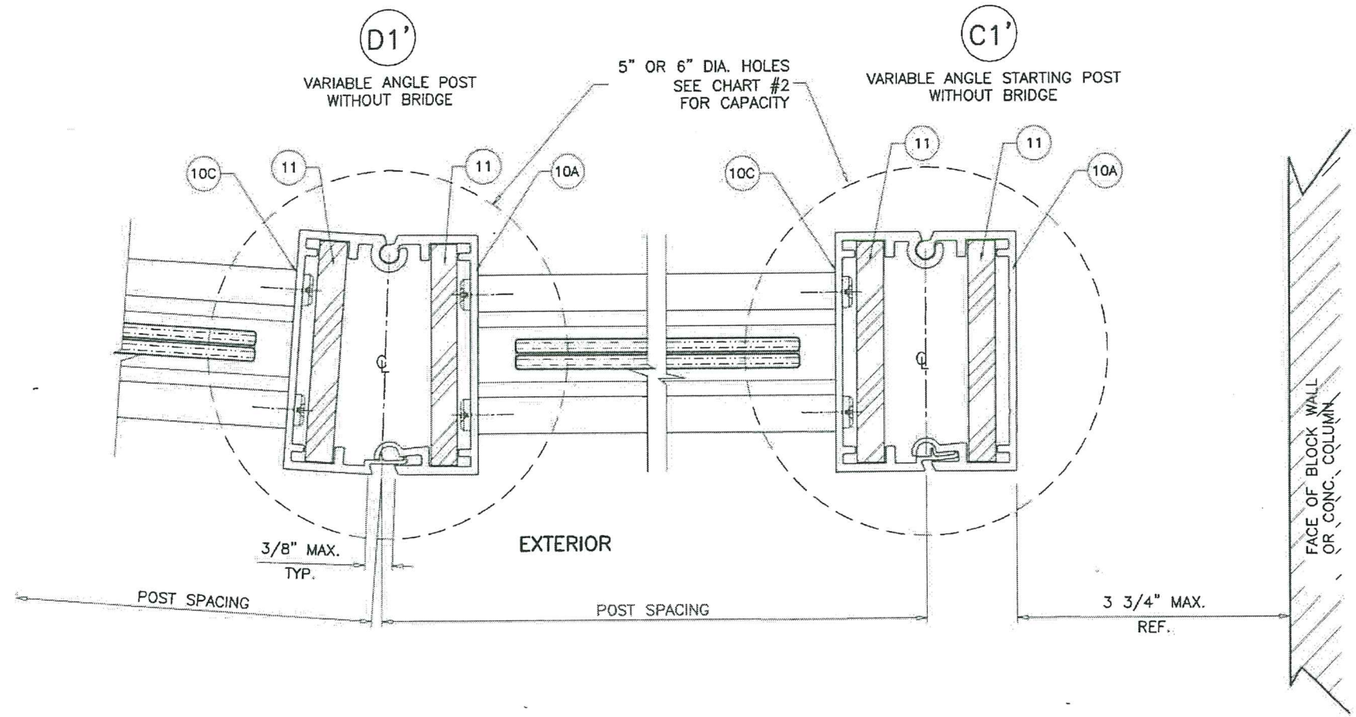

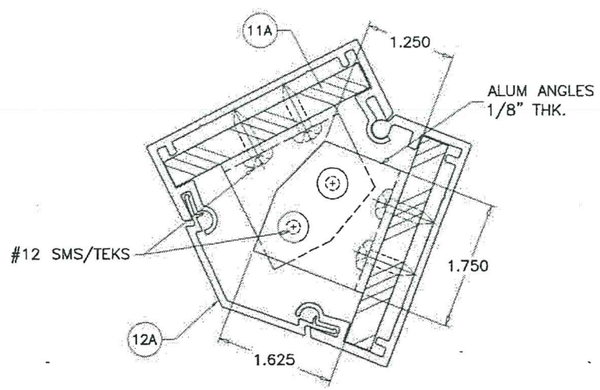

REINF. CLIPS AT TOP
135° BRIDGE ONLY

PRODUCT REVISED
as complying with the Florida
Building Code
Acceptance No 21-0218.09
Expiration Date 03/14/2024
By
Miami Dade Product Control

JALAL FAROOQ
LICENSE
No. 81223
STATE OF FLORIDA
PROFESSIONAL ENGINEER

CENTERED GLASS
VARIABLE ANGLE POSTS

AL-FAROOQ CORPORATION
ENGINEERS & PRODUCT DEVELOPMENT
9360 SUNSET DRIVE, SUITE 220
MIAMI, FLORIDA 33173 (C.A.N. 3538)
TEL. (305) 264-8100 FAX. (305) 262-6978

RAILING\18-34D-ECO

SERIES 1000 ALUM & GLASS RAILING SYSTEM

ECO WINDOW SYSTEMS, LLC.
8502 N.W. 80th STREET
MEDLEY, FL. 33166
TEL. (305) 885-5902 FAX (305) 885-5299

revisions:

no	date	by	description
B	01.25.21		GENERAL REVISION

date: 03-06-18
scale: 1/2" = 1"
dr. by: TARIQ
chk. by:

drawing no.
18-34D

sheet 6.1 of 7

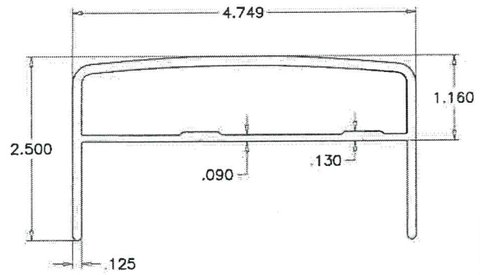

1 TOP RAIL CAP

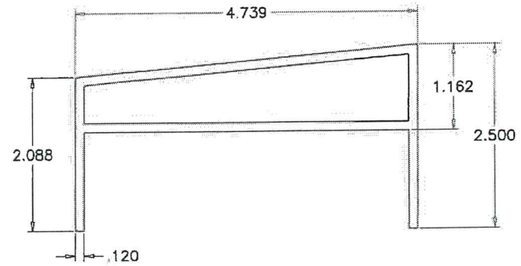

1.1 TOP RAIL CAP

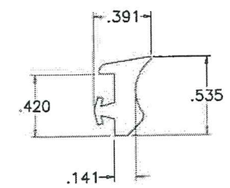

15 EXTERIOR GLAZING GASKET
SCALE 1:1

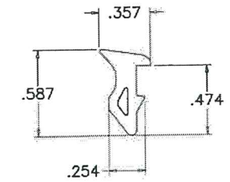

16 INTERIOR GLAZING GASKET
SCALE 1:1

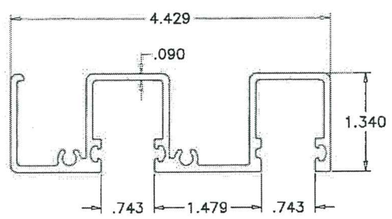

3 TOP RAIL

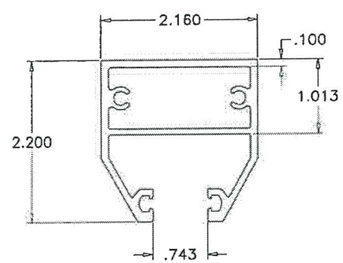

2 TOP/BOTTOM RAIL
(CENTERED GLASS)

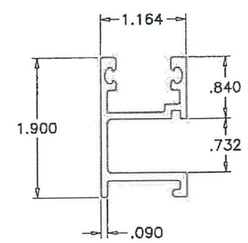

4 BOTTOM RAIL ADAPTER
(NON-CENTERED GLASS)

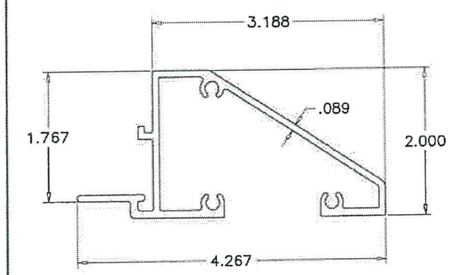

5 BOTTOM RAIL
(NON-CENTERED GLASS)

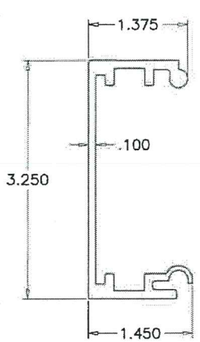

10 STANDARD POST

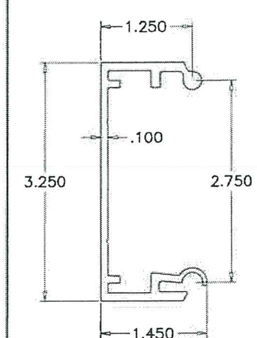

10A VARIABLE ANGLE POST
(BRIDGE MALE)

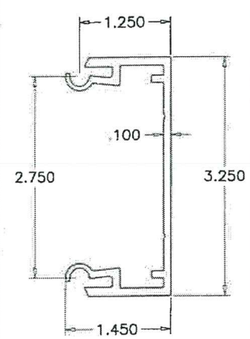

10B VARABLE ANGLE POST
(BRIDGE FEMALE)

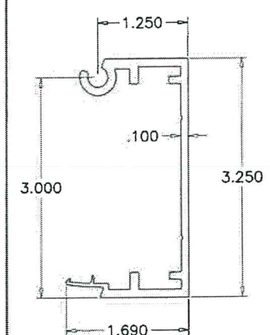

10C VARIABLE ANGLE POST
(MALE WITHOUT BRIDGE)

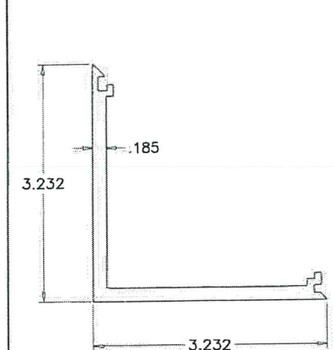

9 90° CORNER POST

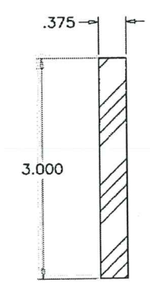

11 POST STIFFENER

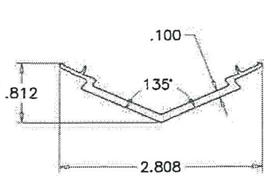

12A 135° BRIDGE

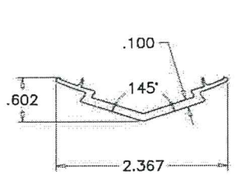

12B 145° BRIDGE

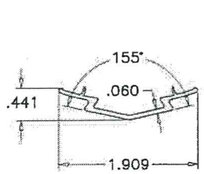

12C 155° BRIDGE

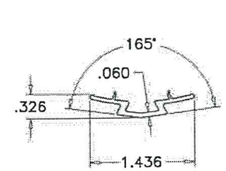

12D 165° BRIDGE

PRODUCT REVISED
as complying with the Florida
Building Code
Acceptance No 21-0219.09
Expiration Date 03/14/2024
By
Miami Dade Product Control

JALAL FAROOQ
LICENSE
No. 81223
FEB 2021
STATE OF FLORIDA
PROFESSIONAL ENGINEER

AL-FAROOQ CORPORATION
ENGINEERS & PRODUCT DEVELOPMENT
9360 SUNSET DRIVE, SUITE 220
MIAMI, FLORIDA 33173 (C.A.N. 3538)
TEL. (305) 264-8100 FAX. (305) 262-6978

RAILING\18-34D-ECO

SERIES 1000 ALUM & GLASS RAILING SYSTEM

ECO WINDOW SYSTEMS, LLC.
8502 N.W. 80th STREET
MEDLEY, FL. 33166
TEL. (305) 885-5299 FAX (305) 885-5902

revisions:

no	date	by	description
A	11.05.20		UPDATED TO 2020 FBC
B	01.25.21		GENERAL REVISION

date: 03-06-18
scale: 1/2" = 1"
dr. by: TARIQ
chk. by:

drawing no.
18-34D

sheet 7 of 7

ITEM	PART #	DESCRIPTION	MATERIAL	MANF./SUPPLIER/REMARKS
1	E1002	TOP RAIL CAP	6063–T6	–
1.1	E1015	TOP RAIL CAP	6063–T6	–
2	E1004	TOP/BOTTOM RAIL (CENTERED GLASS)	6063–T6	–
3	E1001	TOP RAIL	6063–T6	–
4	E1005	BOTTOM RAIL ADAPTER (NON–CENTERED GLASS)	6063–T6	–
5	E1006	BOTTOM RAIL (NON–CENTERED GLASS)	6063–T6	–
6	E1016	BOTTOM RAIL ADAPTER (NON–CENTERED GLASS)	6063–T6	–
7	E1015	BOTTOM RAIL (NON–CENTERED GLASS)	6063–T6	–
9	E1009	90° CORNER POST	6063–T6	–
10	E1007	STANDARD POST	6063–T6	–
10A	E1021	VARIABLE ANGLE POST (BRIDGE MALE)	6063–T6	–
10B	E1022	VARIABLE ANGLE POST (BRIDGE FEMALE)	6063–T6	–
10C	E1023	VARIABLE ANGLE POST (MALE WITHOUT BRIDGE)	6063–T6	–
11	–	POST STIFFENER, 15" LONG	6061–T6	–
12A	E1024	135° BRIDGE	6063–T6	–
12B	E1025	145° BRIDGE	6063–T6	–
12C	E1026	155° BRIDGE	6063–T6	–
12D	E1027	165° BRIDGE	6063–T6	–
15	10067	EXTERIOR GLAZING GASKET	EPDM	DUROMETER 70±5 SHORE A
16	10066	INTERIOR GLAZING GASKET	EPDM	DUROMETER 70±5 SHORE A
17	#12 X 1 1/4"	ASSEMBLY FASTENERS	ST. STEEL	PH SELF DRILLING SCREWS
18	–	SETTING BLOCK (1/2"W X 11/16"H X 4" LONG) 2 PER LITE	EPDM	DUROMETER 80±5 SHORE A
19	–	SETTING BLOCK (1/2"W X 1/4"H X 4" LONG) 2 PER LITE	EPDM	DUROMETER 80±5 SHORE A
20	#8 X 5/8"	TOP/BOTTOM RAIL ASSEMBLY FASTENER, AT 10" O.C.	ST. STEEL	PH SELF DRILLING

PRODUCT REVISED
as complying with the Florida
Building Code
Acceptance No 21-0219.08
Expiration Date 03/04/2024
By
Miami Dade Product Control

JALAL FAROOQ
LICENSE
No. 81223
FEB 12 2021
STATE OF FLORIDA
PROFESSIONAL ENGINEER

AL-FAROOQ CORPORATION
ENGINEERS & PRODUCT DEVELOPMENT
9360 SUNSET DRIVE, SUITE 220
MIAMI, FLORIDA 33173 (C.A.N. 3538)
TEL. (305) 264-8100 FAX. (305) 262-6978

RAILING\18-34D-ECO

SERIES 1000 ALUM & GLASS RAILING SYSTEM

ECO WINDOW SYSTEMS, LLC.
8502 N.W. 80th STREET
MEDLEY, FL. 33166
TEL. (305) 885-5902 FAX (305) 885-5299

revisions:

no	date	by	description
B	01.25.21		GENERAL REVISION

date: 03-06-18
scale: 1/2" = 1"
dr. by: TARIQ
chk. by:

drawing no.
18-34D