MIAMI-DADE COUNTY
DEPARTMENT OF REGULATORY AND ECONOMIC RESOURCES (RER)
BOARD AND CODE ADMINISTRATION DIVISION

MIAMI-DADE COUNTY
PRODUCT CONTROL SECTION
11805 SW 26 Street, Room 208
Miami, Florida 33175-2474
T (786) 315-2590 F (786) 315-2599
www.miamidade.gov/economy

NOTICE OF ACCEPTANCE (NOA)

NCI Group, Inc.
7301 Fairview
Houston, TX 77041

SCOPE:
This NOA is being issued under the applicable rules and regulations governing the use of construction materials. The documentation submitted has been reviewed and accepted by Miami-Dade County RER- Product Control Section to be used in Miami Dade County and other areas where allowed by the Authority Having Jurisdiction (AHJ).

This NOA shall not be valid after the expiration date stated below. The Miami-Dade County Product Control Section (In Miami Dade County) and/or the AHJ (in areas other than Miami Dade County) reserve the right to have this product or material tested for quality assurance purposes. If this product or material fails to perform in the accepted manner, the manufacturer will incur the expense of such testing and the AHJ may immediately revoke, modify, or suspend the use of such product or material within their jurisdiction. RER reserves the right to revoke this acceptance if it is determined by Miami-Dade County Product Control Section that this product or material fails to meet the requirements of the applicable building code.

This product is approved as described herein and has been designed to comply with the High Velocity Hurricane Zone of the Florida Building Code.

DESCRIPTION: " Double-Lok " 0.024" (min.) Structural Standing Seam Steel Roof Panel

APPROVAL DOCUMENT: Drawing No. Dade County, titled " Double-Lok Roof Panel ", sheets 1 through 10 of 10, dated June 10, 2021, prepared by NCI Group, Inc., signed and sealed by Mark Detwiler, P.E. on June 10, 2021, bearing the Miami-Dade County Product Control Revision stamp with the Notice of Acceptance number and the expiration date by the Miami-Dade County Product Control Section.

MISSILE IMPACT RATING: Large and Small Missile Impact Resistant

LABELING: Each panel shall bear a permanent label with the manufacturer's name or logo, city, state and the following statement: "Miami-Dade County Product Control Approved", unless otherwise noted herein.

RENEWAL of this NOA shall be considered after a renewal application has been filed and there has been no change in the applicable building code negatively affecting the performance of this product.

TERMINATION of this NOA will occur after the expiration date or if there has been a revision or change in the materials, use, and/or manufacture of the product or process. Misuse of this NOA as an endorsement of any product, for sales, advertising or any other purposes shall automatically terminate this NOA. Failure to comply with any section of this NOA shall be cause for termination and removal of NOA.

ADVERTISEMENT: The NOA number preceded by the words Miami-Dade County, Florida, and followed by the expiration date may be displayed in advertising literature. If any portion of the NOA is displayed, then it shall be done in its entirety.

INSPECTION: A copy of this entire NOA shall be provided to the user by the manufacturer or its distributors and shall be available for inspection at the job site at the request of the Building Official.

This NOA **revises NOA #19-1119.01** and consists of this page 1, evidence submitted pages E-1, E-2, E-3 & E-4 as well as approval document mentioned above.
The submitted documentation was reviewed by **Helmy A. Makar, P.E., M.S.**

MIAMI-DADE COUNTY APPROVED

Helmy A. Makar
08/19/2021

NOA No. 21-0615.07
Expiration Date: 02/25/2025
Approval Date: 08/19/2021

NCI Group, Inc.

NOTICE OF ACCEPTANCE: EVIDENCE SUBMITTED

1. EVIDENCE SUBMITTED UNDER PREVIOUS APPROVAL #06-0920.02

A. DRAWINGS

1. *Drawing No. DL-001, titled " DoubleLok Panel ", sheets 1 through 10 of 10, dated July 25, 2006, prepared by Metal Building Components, Inc. LP, signed and sealed by Mark Detwiler, P.E. on January 05, 2009.*

B. TESTS

1. *Test report on Uplift Resistance per ASTM E 1592-01 on DoubleLok 12" wide 24 ga. Roof Panel, prepared by Force Engineering & Testing, Inc., Report No. 07-0129T-06L, dated July 12, 2006, signed and sealed by Terrence E. Wolfe, P.E.*
2. *Test report on Uplift Resistance per ASTM E 1592-01 on DoubleLok 12" wide 24 ga. Roof Panel, prepared by Force Engineering & Testing, Inc., Report No. 07-0129T-061-K, dated July 12, 2006, signed and sealed by Terrence E. Wolfe, P.E.*
3. *Test report on Uplift Resistance per ASTM E 1592-01 on DoubleLok 18" wide 24 ga. Roof Panel, prepared by Force Engineering & Testing, Inc., Report No. 07-0129T-06E-G, dated July 12, 2006, signed and sealed by Terrence E. Wolfe, P.E.*
4. *Test report on Uplift Resistance per ASTM E 1592-01 on DoubleLok 24" wide 24 ga. Roof Panel, prepared by Force Engineering & Testing, Inc., Report No. 07-0129T-06A-C, dated July 12, 2006, signed and sealed by Terrence E. Wolfe, P.E.*
5. *Test report on Uplift Resistance per ASTM E 1592-01 on DoubleLok 24" wide 24 ga. Roof Panel, prepared by Force Engineering & Testing, Inc., Report No. 07-0129T-06D, dated July 12, 2006, signed and sealed by Terrence E. Wolfe, P.E.*
6. *Test report on: 2000 hours Accelerated Weathering per ASTM G23, prepared by The Valspar Corporation, dated 08/12/98, signed by Clark Higginbotham.*
7. *Susceptibility to leakage test in accordance with Miami-Dade County Protocol PA 114 Appendix G, prepared by Farabaugh Engineering and Testing, Inc., Report No. T170-06, dated 06/07/2006, signed and sealed by Daniel G. Farabaugh, P.E.*
8. *Test report on Large Missile Impact Test, prepared by Farabaugh Engineering and Testing, Inc., Test Report No. T169-06, dated 06/07/2006, signed and sealed by Daniel G. Farabaugh, P.E.*

C. CALCULATIONS

1. *Calculations titled "DoubleLok 12", 18", 24" 24 ga., 6 pages, prepared by Mark Detwiler, P.E. on 01/05/09, signed and sealed by Mark Detwiler, P.E. on 01/ 05/ 09.*

D. QUALITY ASSURANCE

1. *By Miami-Dade County Building Code Compliance Office.*

E. MATERIAL CERTIFICATIONS

1. *Tensile Test on each specimen tested, prepared by Bodycote Materials Testing, Inc.*

Helmy A. Makar, P.E., M.S.
Product Control Section Supervisor
NOA No. 21-0615.07
Expiration Date: 02/25/2025
Approval Date: 08/19/2021

NOTICE OF ACCEPTANCE: EVIDENCE SUBMITTED

2. EVIDENCE SUBMITTED UNDER PEVIOUS APPROVAL # 11-0810.04

A. DRAWINGS

1. *Drawing No. Dade County, titled " DoubleLok Panel ", sheets 1 through 10 of 10, dated July 27, 2011, prepared by NCI Group, Inc., signed and sealed by Mark Detwiler, P.E. on July 27, 2011.*

B. TESTS

1. *None.*

C. CALCULATIONS

1. *None.*

D. QUALITY ASSURANCE

1. *By Miami-Dade County Department of Permitting, Environment, and Regulatory Affairs (PERA).*

E. MATERIAL CERTIFICATIONS

1. *None.*

F. OTHERS

1. *Bill of Sale, Assignment and Assumption Agreement.*

3. EVIDENCE SUBMITTED UNDER PEVIOUS APPROVAL # 13-0425.14

A. DRAWINGS

1. *Drawing No. Dade County, titled " DoubleLok Roof Panel ", sheets 1 through 10 of 10,dated April 16, 2013, prepared by NCI Group, Inc., signed and sealed by Mark Detwiler, P.E. on April 16, 2013.*

B. TESTS

1. *None.*

C. CALCULATIONS

1. *None.*

D. QUALITY ASSURANCE

1. *By Miami-Dade County Department of Regulatory and Economic Resources.*

E. MATERIAL CERTIFICATIONS

1. *None.*

Helmy A. Makar, P.E., M.S.
Product Control Section Supervisor
NOA No. 21-0615.07
Expiration Date: 02/25/2025
Approval Date: 08/19/2021

NOTICE OF ACCEPTANCE: EVIDENCE SUBMITTED

4. EVIDENCE SUBMITTED UNDER PEVIOUS APPROVAL # 15-0505.28

A. DRAWINGS

1. *Drawing No. Dade County, titled " DoubleLok Roof Panel ", sheets 1 through 10 of 10,dated April 14, 2015, prepared by NCI Group, Inc., signed and sealed by Mark Detwiler, P.E. on April 14, 2015.*

B. TESTS

1. *None.*

C. CALCULATIONS

1. *None.*

D. QUALITY ASSURANCE

1. *By Miami-Dade County Department of Regulatory and Economic Resources.*

E. MATERIAL CERTIFICATIONS

1. *None.*

5. EVIDENCE SUBMITTED UNDER PEVIOUS APPROVAL # 18-0312.07

A. DRAWINGS

1. *Drawing No. Dade County, titled " DoubleLok Roof Panel ", sheets 1 through 10 of 10,dated February 23, 2018, prepared by NCI Group, Inc., signed and sealed by Mark Detwiler, P.E. on February 23, 2018.*

B. TESTS

1. *None.*

C. CALCULATIONS

1. *None.*

D. QUALITY ASSURANCE

1. *By Miami-Dade County Department of Regulatory and Economic Resources.*

E. MATERIAL CERTIFICATIONS

1. *None.*

6. EVIDENCE SUBMITTED UNDER PEVIOUS APPROVAL # 18-1011.04

A. DRAWINGS

1. *None.*

B. TESTS

1. *None.*

Helmy A. Makar, P.E., M.S.
Product Control Section Supervisor
NOA No. 21-0615.07
Expiration Date: 02/25/2025
Approval Date: 08/19/2021

C. CALCULATIONS

1. None.

D. QUALITY ASSURANCE

1. By Miami-Dade County Department of Regulatory and Economic Resources.

E. MATERIAL CERTIFICATIONS

1. None.

7. EVIDENCE SUBMITTED UNDER PEVIOUS APPROVAL # 19-1119.01

A. DRAWINGS

1. None.

B. TESTS

1. Test report on Uplift Resistance per ASTM E 1592-01 on Double-Lok 24" wide 24 ga. Roof Panel, prepared by Force Engineering & Testing, Inc., Report No. 07-0138T-19A,B, dated 09/13/2019, signed and sealed by Terrence E. Wolfe, P.E.

C. CALCULATIONS

1. None.

D. QUALITY ASSURANCE

1. By Miami-Dade County Department of Regulatory and Economic Resources.

E. MATERIAL CERTIFICATIONS

1. None.

8. NEW EVIDENCE SUBMITTED

A. DRAWINGS

1. Drawing No. Dade County, titled " Double-Lok Roof Panel ", sheets 1 through 10 of 10, dated June 10, 2021, prepared by NCI Group, Inc., signed and sealed by Mark Detwiler, P.E. on June 10, 2021.

B. TESTS

1. None.

C. CALCULATIONS

1. None.

D. QUALITY ASSURANCE

1. By Miami-Dade County Department of Regulatory and Economic Resources.

E. MATERIAL CERTIFICATIONS

1. None.

Helmy A. Makar, P.E., M.S.
Product Control Section Supervisor
NOA No. 21-0615.07
Expiration Date: 02/25/2025
Approval Date: 08/19/2021

INSTALLATION NOTE:

1. APPLY TRI-BEAD TAPE SEALER CONTINUOUS OVER SUBSTRATE.
2. ATTACH INSIDE METAL CLOSURE W/ 1/4"-14 X 1" SDS W/WASHER [FASTENER #1]
3. APPLY A 10" LONG PIECE OF TRI-BEAD TAPE SEALER UP AND OVER THE INSIDE METAL CLOSURE
4. APPLY A 2" LONG PIECE OF TRI-BEAD TAPE SEALER IN VERTICAL LEG OF PANEL SEAM
5. IF THE PANELS HAVE MINOR RIBS, APPLY MINOR RIB TAPE SEAL BETWEEN PANEL AND EAVE TRIM OR GUTTER
6. ATTACH PANEL W/#1/4-14 X 1 1/4" LONG LIFE W/WASHER IN THE FLAT PANEL AND ONE EACH SIDE OF THE INSIDE METAL CLOSURE (8) TOTAL [FASTENER #1E]

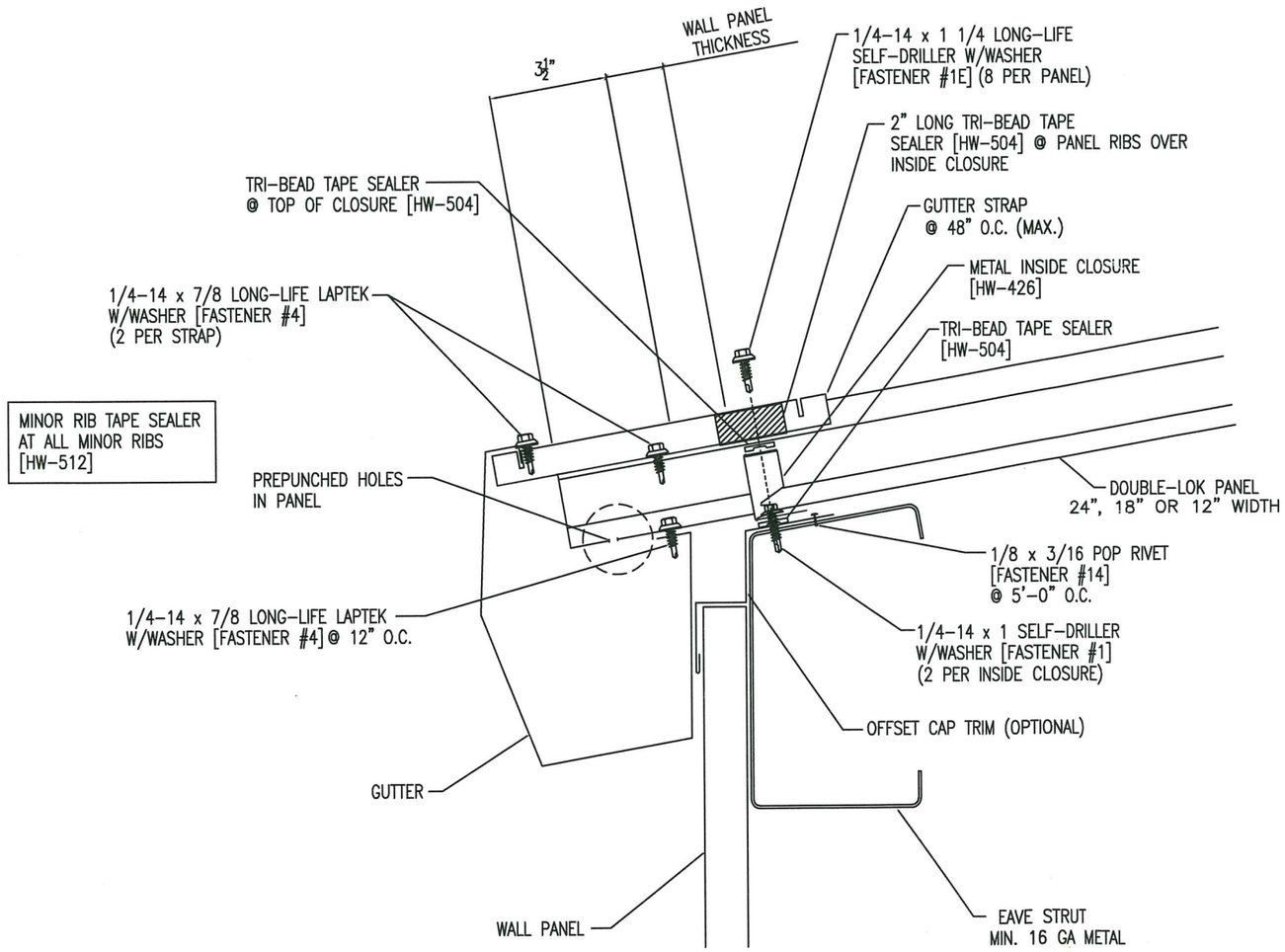

Fixed Eave Detail

PRODUCT REVISED
as complying with the Florida
Building Code
Acceptance No 21-0615.07
Expiration Date 02/25/2025
By
Miami Dade Product Control

Revison	Date	Description	By	Ck'd

NCI GROUP, INC.
CORPORATE OFFICES : 7301 FAIRVIEW DR. HOUSTON TX. 77041 (800) 777-6378
MAILING : P.O. BOX 16220 HOUSTON TX. 77216-6220

Project Name and Location:
DADE COUNTY PRODUCT APPROVAL
DADE COUNTY, FLORIDA

SHEET TITLE:
DOUBLELOK ROOF PANEL

Scale: NOT TO SCALE
Drawn by: EH
Checked by: JA
Job Number: DADE COUNTY
Sheet Number: 1/10

THESE DRAWINGS AND THE METAL COMPONENTS THEY REPRESENT ARE THE PRODUCT OF NCI GROUP OR ANOTHER DIVISION OR AFFILIATE OF NCI GROUP, INC. - 7301 FAIRVIEW DR. HOUSTON TX 77041. THE ENGINEER WHOSE SEAL APPEARS HEREON IS EMPLOYED BY NCI GROUP OR ANOTHER DIVISION OR AFFILIATE OF NCI GROUP, INC. AND IS NOT THE ENGINEER OF RECORD FOR THIS PROJECT. THESE DRAWINGS MUST BE REVIEWED FOR PROJECT COMPLIANCE BY THE ENGINEER OF RECORD.

MARK DETWILER
LICENSE
64247
STATE OF FLORIDA
PROFESSIONAL ENGINEER

6-10-21
Mark Detwiler

INSTALLATION NOTE:

1. APPLY TRI-BEAD TAPE SEALER CONTINUOUS OVER SUBSTRATE.
2. ATTACH INSIDE METAL CLOSURE W/ 1/4"-14 X 1" SDS W/WASHER [FASTENER #1]
3. APPLY A 10" LONG PIECE OF TRI-BEAD TAPE SEALER UP AND OVER THE INSIDE METAL CLOSURE
4. APPLY A 2" LONG PIECE OF TRI-BEAD TAPE SEALER IN VERTICAL LEG OF PANEL SEAM
5. IF THE PANELS HAVE MINOR RIBS, APPLY MINOR RIB TAPE SEAL BETWEEN PANEL AND EAVE TRIM OR GUTTER
6. ATTACH PANEL W/#1/4-14 X 1 1/4" LONG LIFE W/WASHER IN THE FLAT PANEL AND ONE EACH SIDE OF THE INSIDE METAL CLOSURE (8) TOTAL [FASTENER #1E]

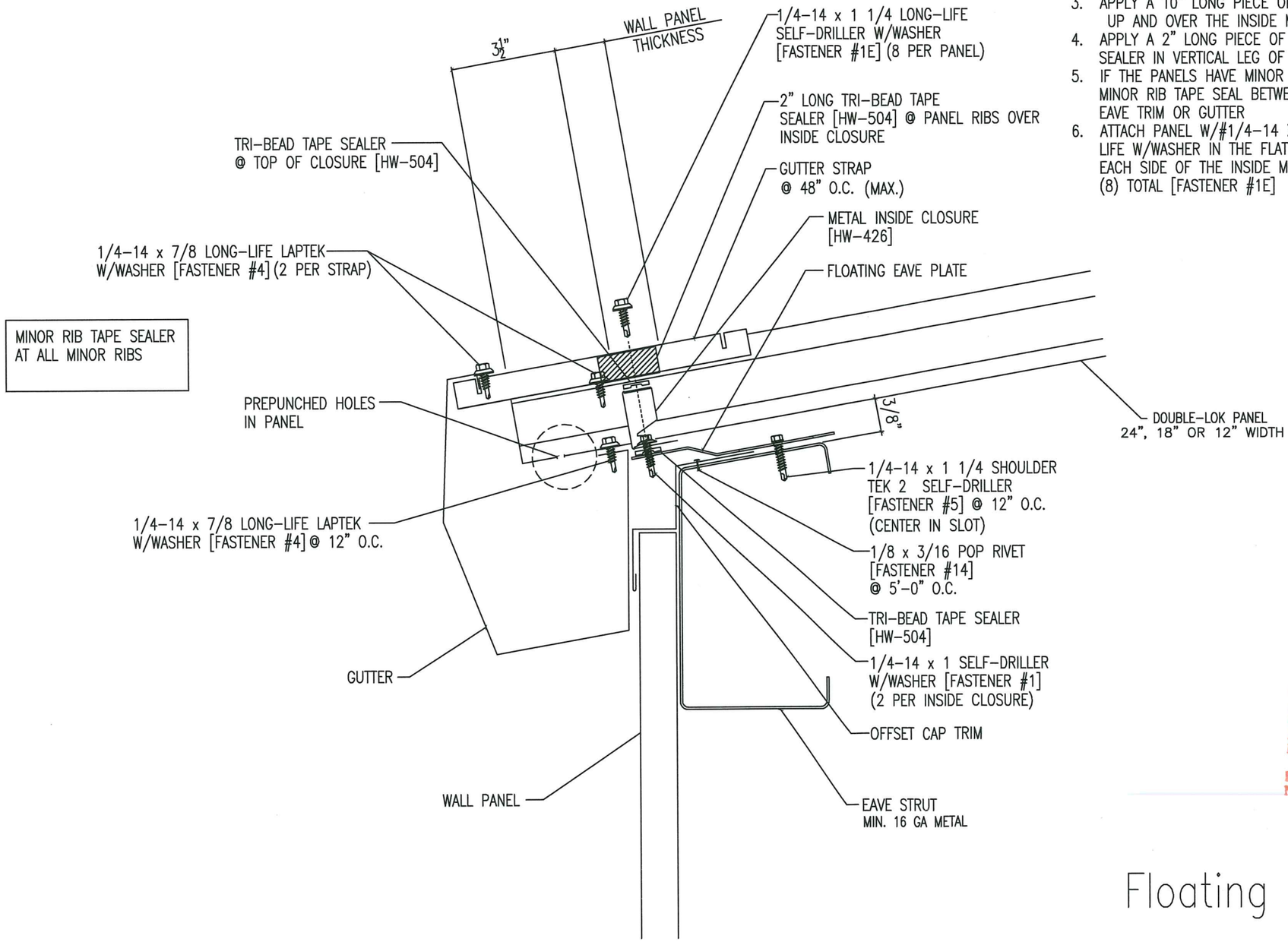

PRODUCT REVISED
as complying with the Florida
Building Code
Acceptance No 21-0615.07
Expiration Date 02/25/2025
By
Miami Dade Product Control

Floating Eave Detail

Revison	Date	Description	By	Ck'd

NCI GROUP, INC.
CORPORATE OFFICES: 7301 FAIRVIEW DR. HOUSTON TX. 77041 (800) 777-8378
MAILING: P.O. BOX 40220 HOUSTON TX. 77240-0220

Project Name and Location:
PRODUCT APPROVAL
DADE COUNTY, FLORIDA

SHEET TITLE:
DOUBLELOK ROOF PANEL

Scale: NOT TO SCALE
Drawn by: EH
Checked by: JA
Job Number: DADE COUNTY
Sheet Number: 2/10

THESE DRAWINGS AND THE METAL COMPONENTS THEY REPRESENT ARE THE PRODUCT OF NCI GROUP OR ANOTHER DIVISION OR AFFILIATE OF NCI GROUP, INC. – 7301 FAIRVIEW DR. HOUSTON TX 77041. THE ENGINEER WHOSE SEAL APPEARS HEREON IS EMPLOYED BY NCI GROUP OR ANOTHER DIVISION OR AFFILIATE OF NCI GROUP, INC. AND IS NOT THE ENGINEER OF RECORD FOR THIS PROJECT. THESE DRAWINGS MUST BE REVIEWED FOR PROJECT COMPLIANCE BY THE ENGINEER OF RECORD.

MARK DETWILER
LICENSE
64247
STATE OF FLORIDA
PROFESSIONAL ENGINEER

6-10-21

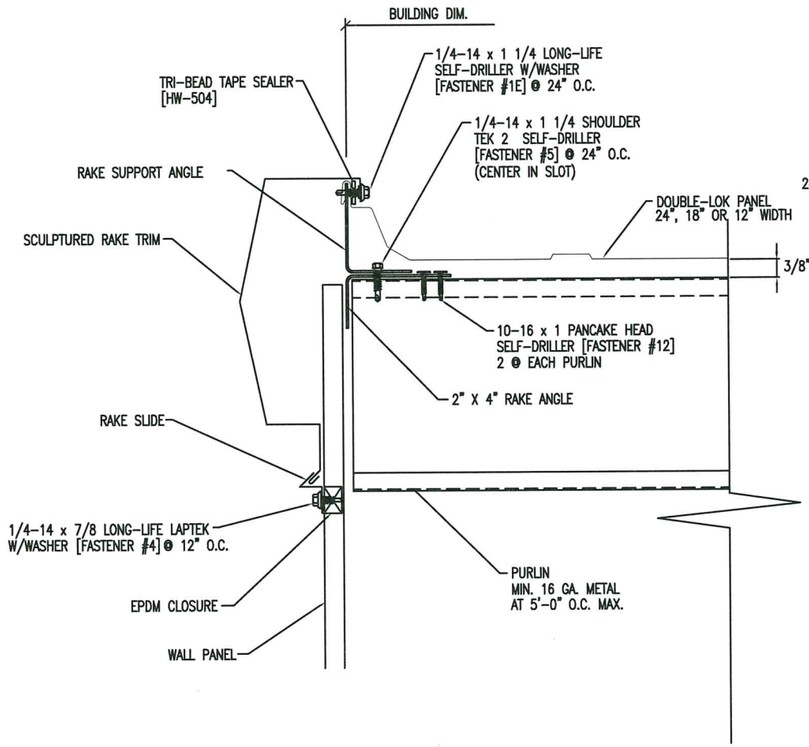

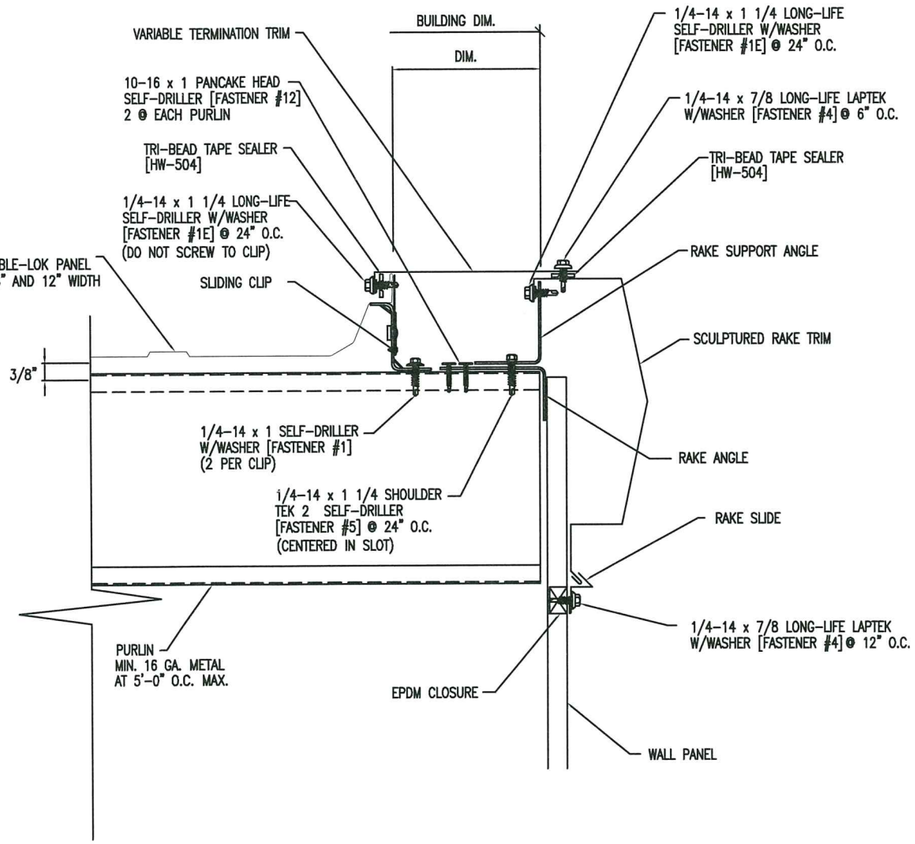

PRODUCT REVISED
as complying with the Florida
Building Code
Acceptance No 21-0615.07
Expiration Date 02/25/2025
By Holly A. Walker
Miami Dade Product Control

Revison	Date	Description	By	Ck'd

NCI GROUP, INC.
CORPORATE OFFICES : 7301 FAIRVIEW DR. HOUSTON TX. 77041 (800) 777-8378
MAILING : P.O. BOX 42020 HOUSTON TX. 77242-2020

Project Name and Location:
DADE COUNTY PRODUCT APPROVAL
DADE COUNTY, FLORIDA

SHEET TITLE:
DOUBLELOK ROOF PANEL

Scale: NOT TO SCALE
Drawn by: EH
Checked by: JA
Job Number: DADE COUNTY
Sheet Number: 3/10

THESE DRAWINGS AND THE METAL COMPONENTS THEY REPRESENT ARE THE PRODUCT OF NCI GROUP OR ANOTHER DIVISION OR AFFILIATE OF NCI GROUP, INC. – 7301 FAIRVIEW DR. HOUSTON TX 77041. THE ENGINEER WHOSE SEAL APPEARS HEREON IS EMPLOYED BY NCI GROUP OR ANOTHER DIVISION OR AFFILIATE OF NCI GROUP, INC. AND IS NOT THE ENGINEER OF RECORD FOR THIS PROJECT. THESE DRAWINGS MUST BE REVIEWED FOR PROJECT COMPLIANCE BY THE ENGINEER OF RECORD.

MARK DETWILER
LICENSE
64247
STATE OF FLORIDA
PROFESSIONAL ENGINEER

6-18-21
Mark Detwiler

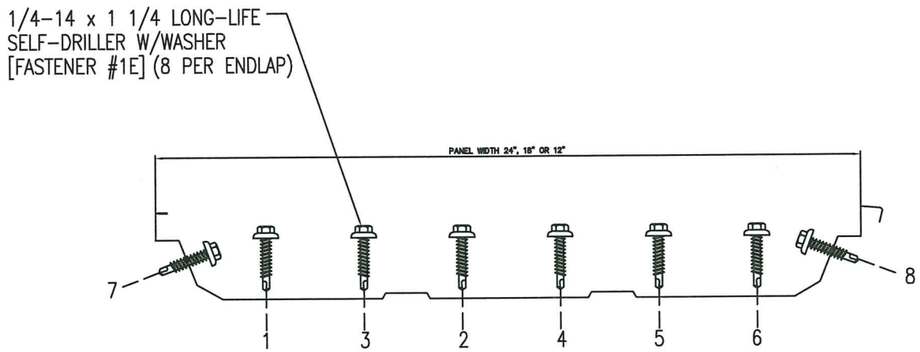

FASTENER SEQUENCE @ ENDLAP

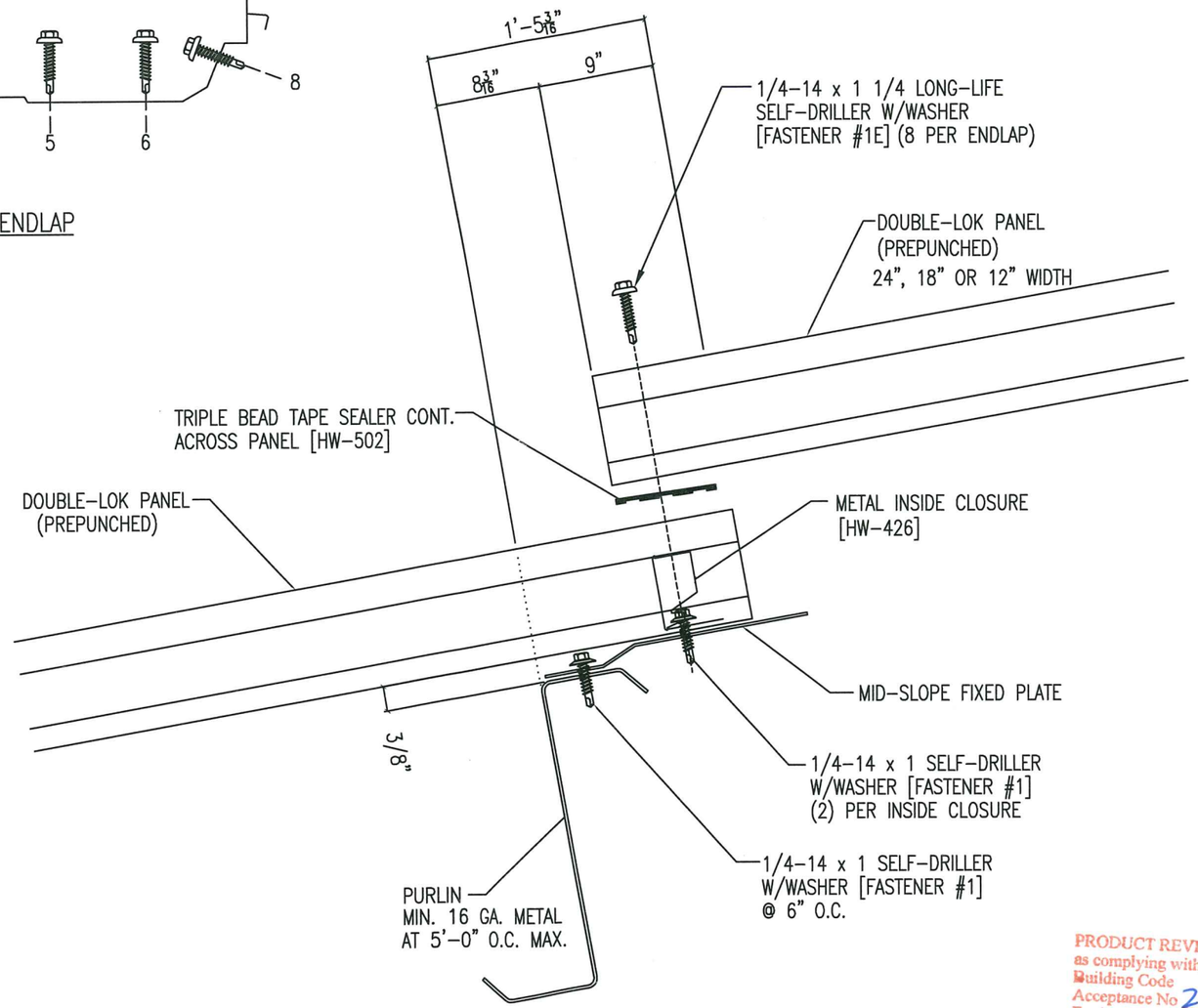

Fixed Endlap Detail

PRODUCT REVISED
as complying with the Florida
Building Code
Acceptance No 21-0615.07
Expiration Date 02/25/2025
By Hedy A. Nelson
Miami Dade Product Control

Revison	Date	Description	By	Ck'd

NCI GROUP, INC.
CORPORATE OFFICES : 7301 FAIRVIEW DR. HOUSTON TX. 77041 (800) 777-8378
MAILING : P.O. BOX 40220 HOUSTON TX. 77240-0220

Project Name and Location:
DADE COUNTY PRODUCT APPROVAL
DADE COUNTY, FLORIDA

SHEET TITLE:
DOUBLELOK ROOF PANEL

Scale: NOT TO SCALE
Drawn by: EH
Checked by: JA
Job Number: DADE COUNTY
Sheet Number: 4/10

THESE DRAWINGS AND THE METAL COMPONENTS THEY REPRESENT ARE THE PRODUCT OF NCI GROUP OR ANOTHER DIVISION OR AFFILIATE OF NCI GROUP, INC. – 7301 FAIRVIEW DR. HOUSTON TX 77041. THE ENGINEER WHOSE SEAL APPEARS HEREON IS EMPLOYED BY NCI GROUP OR ANOTHER DIVISION OR AFFILIATE OF NCI GROUP, INC. AND IS NOT THE ENGINEER OF RECORD FOR THIS PROJECT. THESE DRAWINGS MUST BE REVIEWED FOR PROJECT COMPLIANCE BY THE ENGINEER OF RECORD.

MARK DETWILER
LICENSE
64247
STATE OF
FLORIDA
PROFESSIONAL ENGINEER

6-10-21
Mark Detwiler

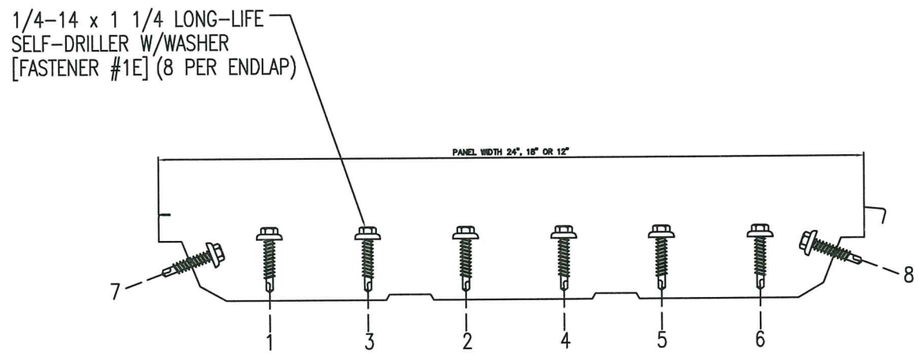

FASTENER SEQUENCE @ ENDLAP

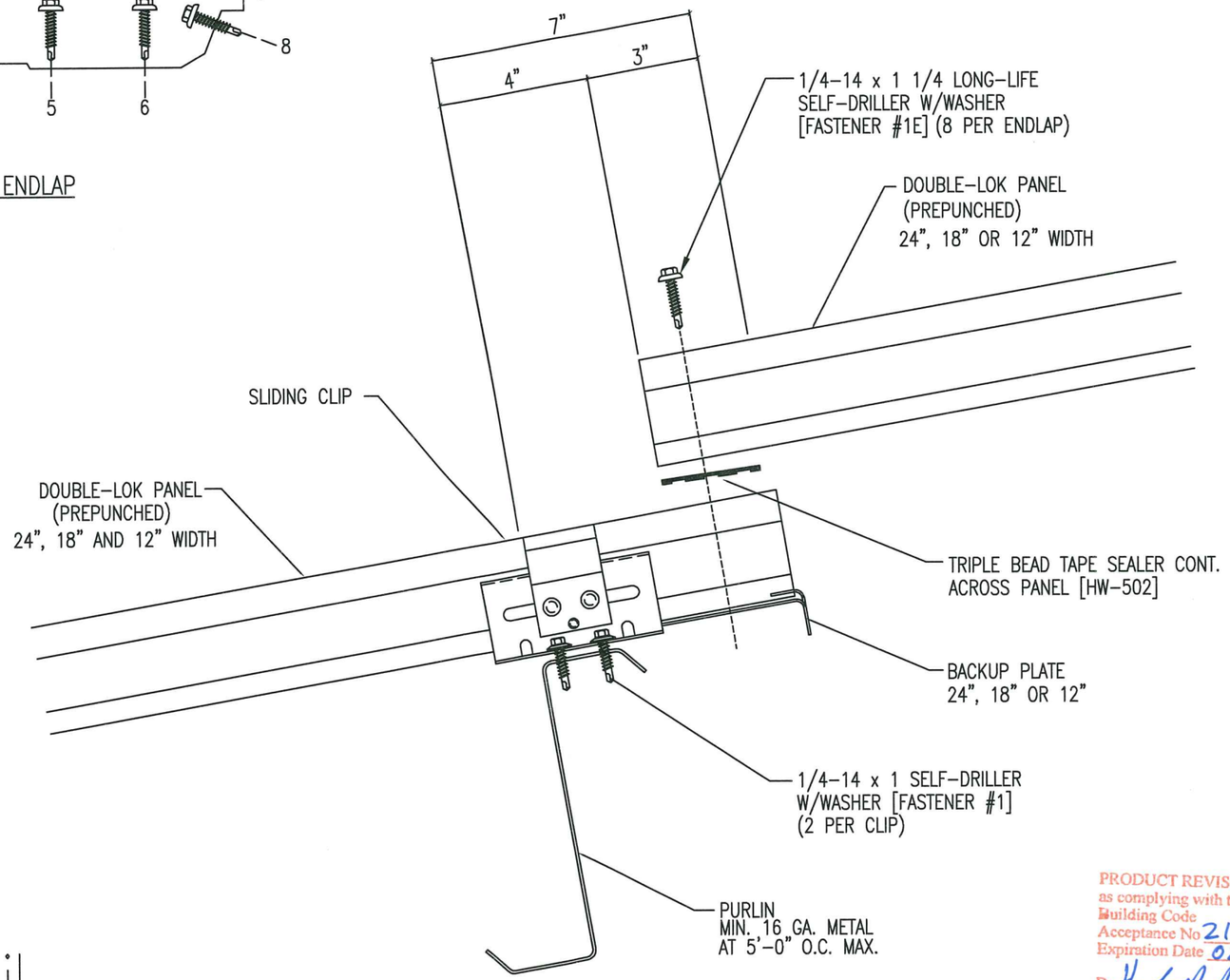

Floating Endlap Detail

PRODUCT REVISED
as complying with the Florida
Building Code
Acceptance No 21-0615.07
Expiration Date 02/25/2025
By
Miami Dade Product Control

Revison	Date	Description	By	Ck'd

NCI GROUP, INC.
CORPORATE OFFICES : 7301 FAIRVIEW DR. HOUSTON TX. 77041 (800) 777-8378
MAILING : P.O. BOX 40220 HOUSTON TX. 77240-0220

Project Name and Location:
DADE COUNTY PRODUCT APPROVAL
DADE COUNTY, FLORIDA

SHEET TITLE:
DOUBLELOK ROOF PANEL

Scale: NOT TO SCALE
Drawn by: EH
Checked by: JA
Job Number: DADE COUNTY
Sheet Number: 5/10

THESE DRAWINGS AND THE METAL COMPONENTS THEY REPRESENT ARE THE PRODUCT OF NCI GROUP OR ANOTHER DIVISION OR AFFILIATE OF NCI GROUP, INC. - 7301 FAIRVIEW DR. HOUSTON TX 77041. THE ENGINEER WHOSE SEAL APPEARS HEREON IS EMPLOYED BY NCI GROUP OR ANOTHER DIVISION OR AFFILIATE OF NCI GROUP, INC. AND IS NOT THE ENGINEER OF RECORD FOR THIS PROJECT. THESE DRAWINGS MUST BE REVIEWED FOR PROJECT COMPLIANCE BY THE ENGINEER OF RECORD.

MARK DETWILER
LICENSE
64247
STATE OF
FLORIDA
PROFESSIONAL ENGINEER

6-10-21

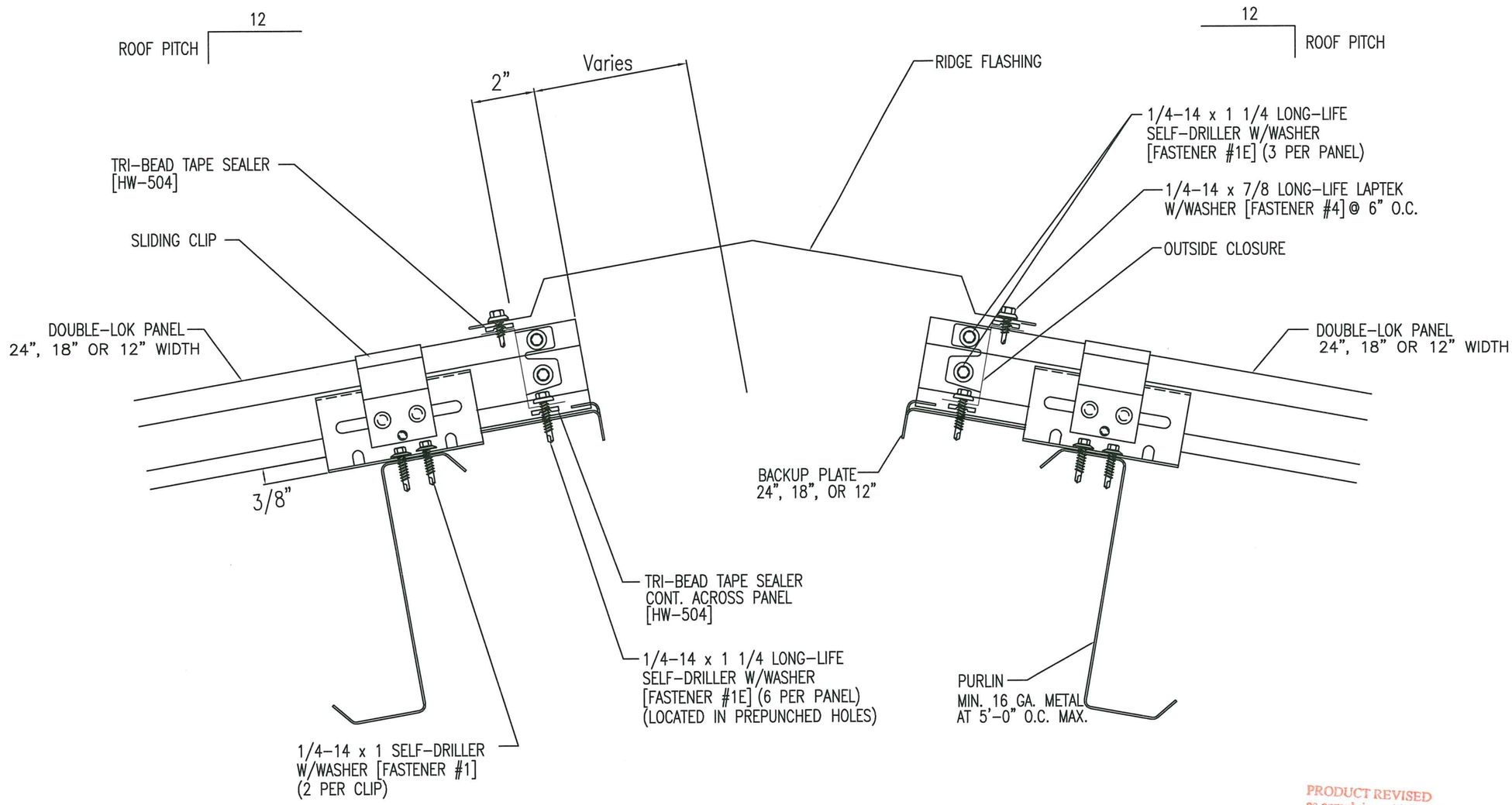

Revison	Date	Description	By	Ck'd

NCI GROUP, INC.
CORPORATE OFFICES : 7301 FAIRVIEW DR. HOUSTON TX. 77041 (800) 777-8378
MAILING : P.O. BOX 40220 HOUSTON TX. 77240-0220

Project Name and Location:
DADE COUNTY PRODUCT APPROVAL
DADE COUNTY, FLORIDA

SHEET TITLE:
DOUBLELOK ROOF PANEL

Scale: NOT TO SCALE
Drawn by: EH
Checked by: JA
Job Number: DADE COUNTY
Sheet Number: 6/10

THESE DRAWINGS AND THE METAL COMPONENTS THEY REPRESENT ARE THE PRODUCT OF NCI GROUP OR ANOTHER DIVISION OR AFFILIATE OF NCI GROUP, INC. - 7301 FAIRVIEW DR. HOUSTON TX 77041. THE ENGINEER WHOSE SEAL APPEARS HEREON IS EMPLOYED BY NCI GROUP OR ANOTHER DIVISION OR AFFILIATE OF NCI GROUP, INC. AND IS NOT THE ENGINEER OF RECORD FOR THIS PROJECT. THESE DRAWINGS MUST BE REVIEWED FOR PROJECT COMPLIANCE BY THE ENGINEER OF RECORD.

PRODUCT REVISED
as complying with the Florida
Building Code
Acceptance No 21-0615.07
Expiration Date 02/25/2025
By Hely A. Muñoz
Miami Dade Product Control

MARK DETWILER
LICENSE
64247
STATE OF
FLORIDA
PROFESSIONAL ENGINEER

6-15-23
Mark Detwiler

INSTALLATION NOTE:

ATTACH S5! DL WINDCLAMP AT EVERY SLIDINGCLIP LOCATION

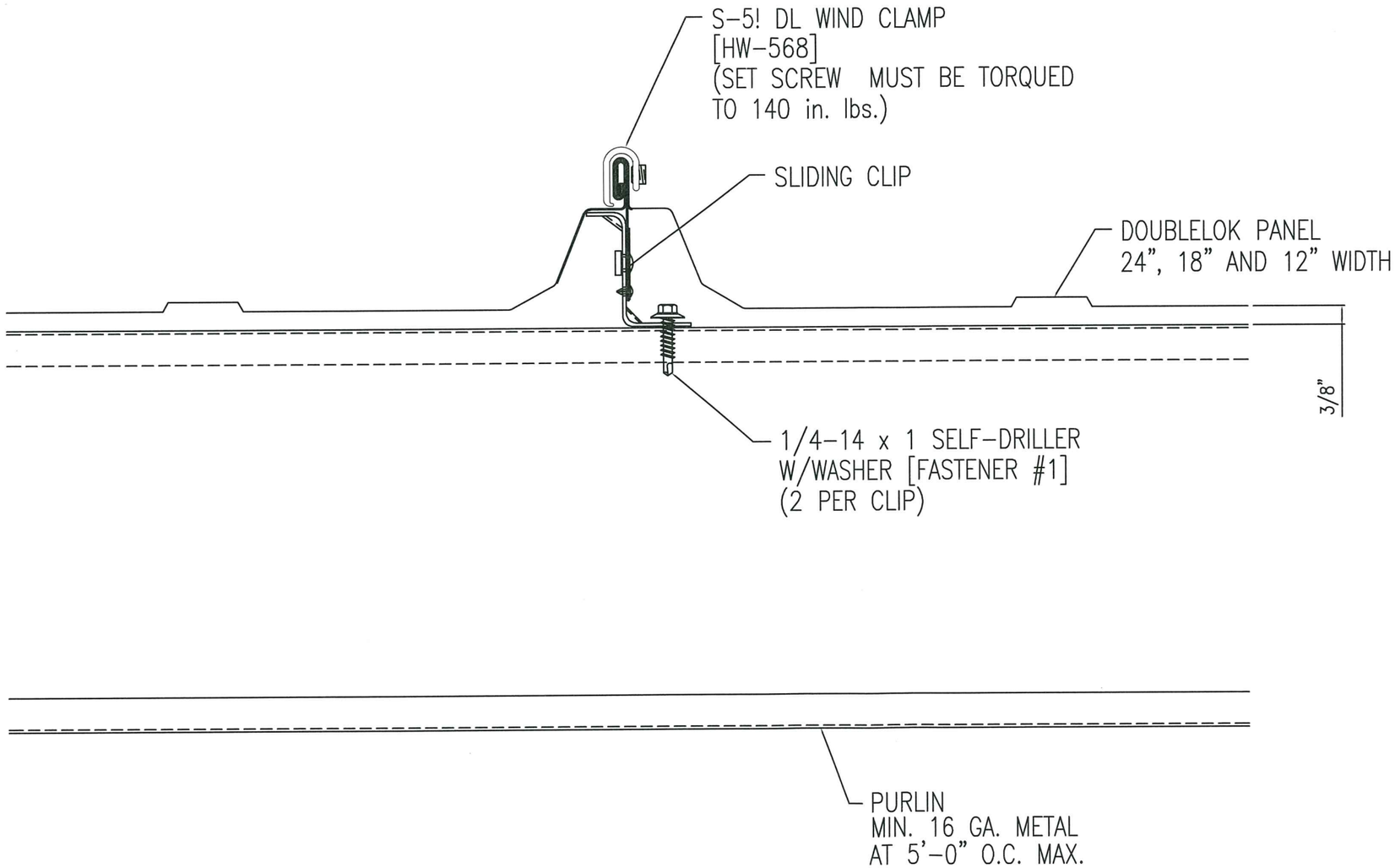

PRODUCT REVISED
as complying with the Florida
Building Code
Acceptance No 21-0615.07
Expiration Date 02/25/2025
By
Miami Dade Product Control

Revison	Date	Description	By	Ck'd

NCI GROUP, INC.
CORPORATE OFFICES : 7301 FAIRVIEW DR. HOUSTON TX. 77041 (800) 777-8378
MAILING : P.O. BOX 40220 HOUSTON TX. 77240-0220

Project Name and Location:
DADE COUNTY PRODUCT APPROVAL
DADE COUNTY, FLORIDA

SHEET TITLE:
DOUBLELOK ROOF PANEL

Scale: NOT TO SCALE
Drawn by: EH
Checked by: JA
Job Number: DADE COUNTY
Sheet Number: 7/10

THESE DRAWINGS AND THE METAL COMPONENTS THEY REPRESENT ARE THE PRODUCT OF NCI GROUP OR ANOTHER DIVISION OR AFFILIATE OF NCI GROUP, INC. – 7301 FAIRVIEW DR. HOUSTON TX 77041. THE ENGINEER WHOSE SEAL APPEARS HEREON IS EMPLOYED BY NCI GROUP OR ANOTHER DIVISION OR AFFILIATE OF NCI GROUP, INC. AND IS NOT THE ENGINEER OF RECORD FOR THIS PROJECT. THESE DRAWINGS MUST BE REVIEWED FOR PROJECT COMPLIANCE BY THE ENGINEER OF RECORD.

MARK BETWILER
LICENSE
64247
STATE OF
FLORIDA
PROFESSIONAL ENGINEER

6-10-21

Double-Lok ®

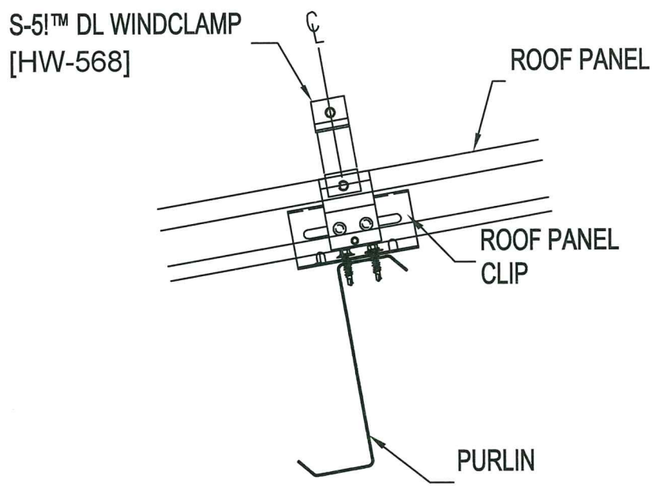

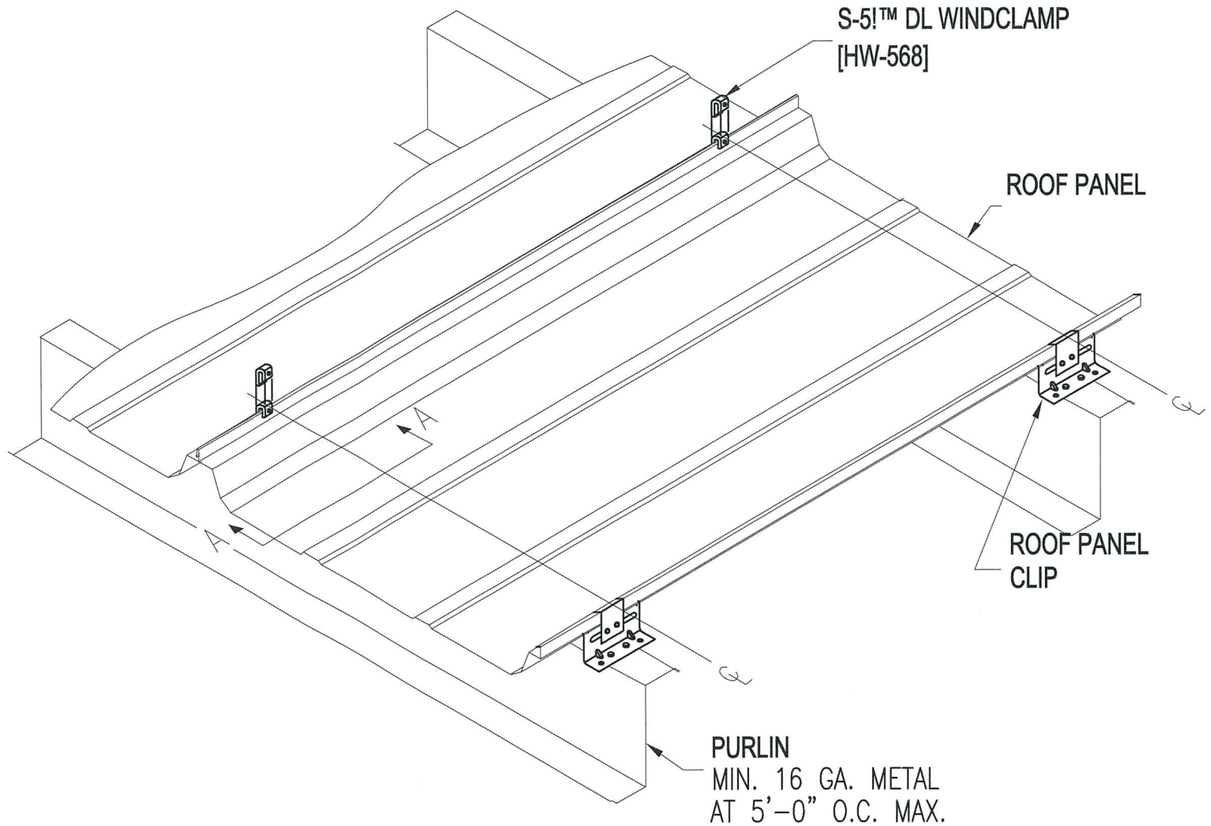

Only for use with 2122 and 2124 clips.
Torque set screw to 140 in-lbs.

PRODUCT REVISED
as complying with the Florida
Building Code
Acceptance No 21-0615.07
Expiration Date 02/25/2025
By Holy A. Mahr
Miami Dade Product Control

Revision	Date	Description	By	Ck'd

NCI GROUP, INC.
CORPORATE OFFICES : 7301 FAIRVIEW DR., HOUSTON TX. 77041 (800) 777-4378
MAILING : P.O. BOX 490220 HOUSTON TX. 77249-0220

Project Name and Location:
DADE COUNTY PRODUCT APPROVAL
DADE COUNTY, FLORIDA

SHEET TITLE:
DOUBLELOK ROOF PANEL

Scale: NOT TO SCALE
Drawn by: EH
Checked by: JA
Job Number: DADE COUNTY
Sheet Number: 8/10

THESE DRAWINGS AND THE METAL COMPONENTS THEY REPRESENT ARE THE PRODUCT OF NCI GROUP OR ANOTHER DIVISION OR AFFILIATE OF NCI GROUP, INC. – 7301 FAIRVIEW DR. HOUSTON TX 77041. THE ENGINEER WHOSE SEAL APPEARS HEREON IS EMPLOYED BY NCI GROUP OR ANOTHER DIVISION OR AFFILIATE OF NCI GROUP, INC. AND IS NOT THE ENGINEER OF RECORD FOR THIS PROJECT. THESE DRAWINGS MUST BE REVIEWED FOR PROJECT COMPLIANCE BY THE ENGINEER OF RECORD.

MARK DETWILER
LICENSE
64247
STATE OF
FLORIDA
PROFESSIONAL ENGINEER

6-10-21

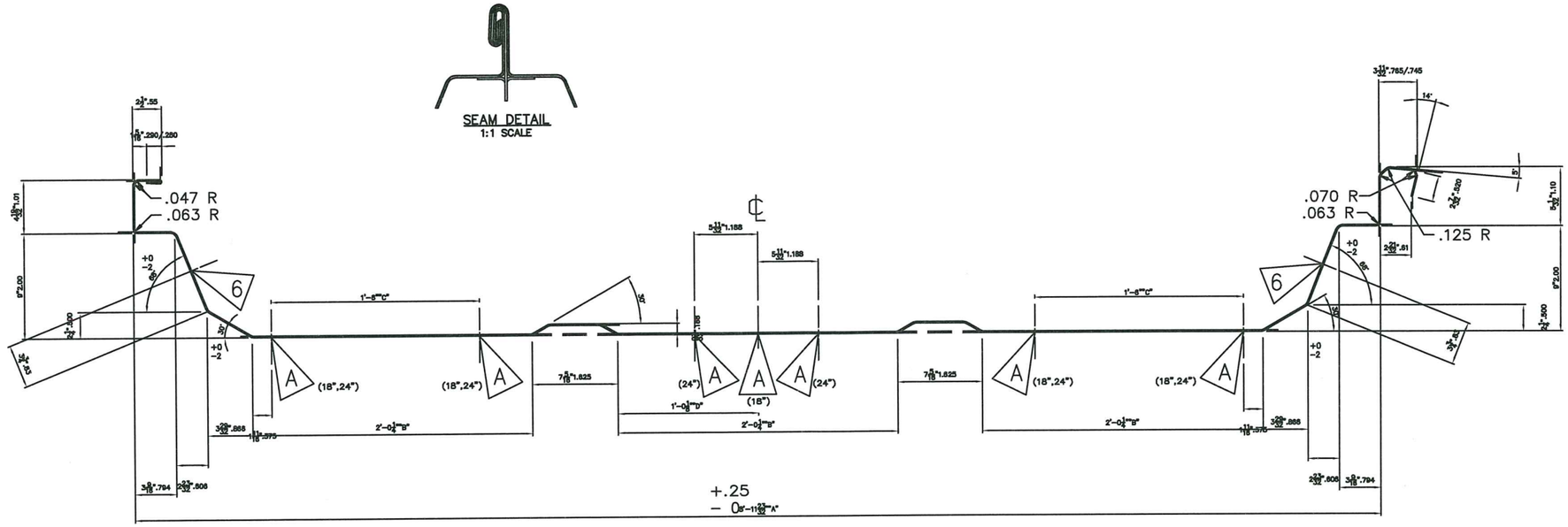

NOTES:

A 5/16 DIAMETER HOLES ARE IN RIBBED PANELS ONLY & ARE 1.5" BACK FROM BOTH ENDS OF PANEL.(6 HOLES EACH END 24".) (5 HOLES EACH END 18".)

HOLE LOCATIONS		
COVERAGE	DIM "C"	DIM "D"
24"	4.000	2.693
18"	2.187	1.693

COVERAGE	DIM "A"	DIM "B"	RIBS	STRIP WIDTH
12"	11.94	———	NO	17.94*
24"	23.94	5.386	YES	29.94*
18"	17.94	3.386	YES	23.94*

*STRIP WIDTH TOLERANCE +1/8/-0

Low Double-Lok Sliding Clip HW-2122
High Double-Lok Sliding Clip HW-2124

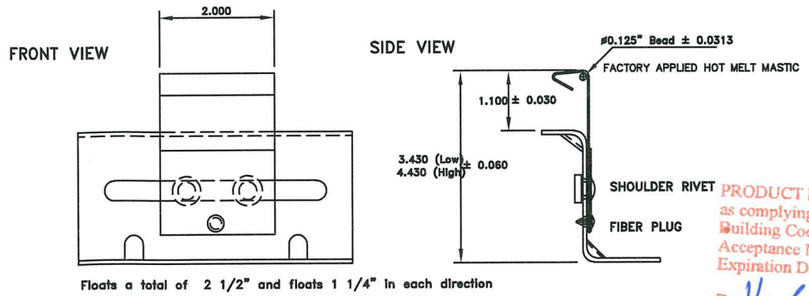

PRODUCT REVISED
as complying with the Florida Building Code
Acceptance No. 21-0615.07
Expiration Date 02/25/2025
By Hely A. Mele
Miami Dade Product Control

SHOULDER RIVET

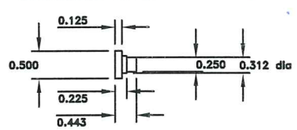

Revision	Date	Description	By	Ck'd

NCI GROUP, INC.
CORPORATE OFFICES : 7301 FAIRVIEW DR. HOUSTON TX. 77041 (800) 777-8378
MAILING : P.O. BOX 40220 HOUSTON TX. 77240-0220

Project Name and Location:
DADE COUNTY PRODUCT APPROVAL
DADE COUNTY, FLORIDA

SHEET TITLE:
DOUBLELOK ROOF PANEL

Scale: NOT TO SCALE
Drawn by: EH
Checked by: JA
Job Number: DADE COUNTY
Sheet Number: 9/10

THESE DRAWINGS AND THE METAL COMPONENTS THEY REPRESENT ARE THE PRODUCT OF NCI GROUP OR ANOTHER DIVISION OR AFFILIATE OF NCI GROUP, INC. – 7301 FAIRVIEW DR. HOUSTON TX 77041. THE ENGINEER WHOSE SEAL APPEARS HEREON IS EMPLOYED BY NCI GROUP OR ANOTHER DIVISION OR AFFILIATE OF NCI GROUP, INC. AND IS NOT THE ENGINEER OF RECORD FOR THIS PROJECT. THESE DRAWINGS MUST BE REVIEWED FOR PROJECT COMPLIANCE BY THE ENGINEER OF RECORD.

MARK DETWILER
LICENSE
64247
STATE OF FLORIDA
PROFESSIONAL ENGINEER

6-19-21

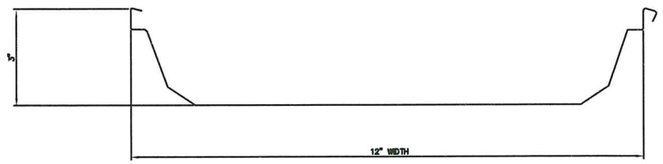

DOUBLE-LOK PANEL PROFILE

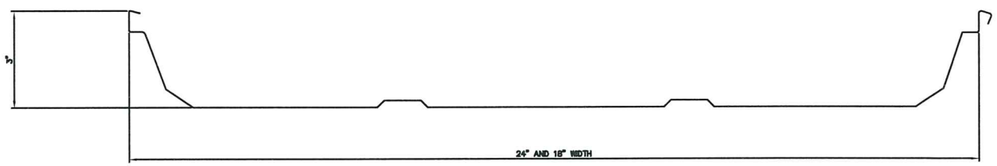

DOUBLE-LOK PANEL PROFILE

PANEL PROPERTIES

PANEL GAUGE	PANEL THICKNESS	YIELD STRENGTH	TENSILE STRENGTH	ELONGATION	HARDNESS	STEEL COATING	PAINT COATINGS
24	.024 MIN.	50 KSI	55-70 KSI	20-36%	50-65 HRB	AZ 55	SIG 300 KYNAR

PANEL ACCESSORIES

CONSTRUCTION FASTENERS INC.
SPRING STREET AND VAN REED ROAD
P.O. BOX 6326, WYOMISSING PA 19610

- #14 X 7/8" LAP TEK W/BOND SEAL WASHER LONG LIFE - FASTENER #4
- 1/4-14 X 1 1/4 SDS W/ WASHER LONG LIFE - FASTENER #1E
- 1/4-14 X 1 SDS W/ WASHER - FASTENER #1
- 1/4-14 X 1 1/4 SHOULDER TEK SDS - FASTENER #5
- #10-16 PANCAKE HEAD SDS - FASTENER #12
- 1/4-14 X 1 ZAC STS W/ WASHER - FASTENER #18
- METAL INSIDE CLOSURE - HW429
- SSI DL WINDCLAMP - HW 568

GULF-SEAL SPECIALTIES, INC.
P.O. BOX 508
SOUTH HOUSTON, TX 77587

TRI-BEAD — TAPE SEALER MB-10A (POLYISOBUTYLENE-ISOPLENE)

TRIPLE BEAD — TAPE SEALER MB-10A (POLYISOBUTYLENE-ISOPLENE)

SCHNEE-MOREHEAD, INC.
111 NORTH NURSERY ROAD
IRVING, TX 75060

PERMATHANE URETHANE CAULK

NOTES:

1. THE 24 GAUGE DOUBLELOK STANDING SEAM ROOF PANELS SHALL BE USED FOR ROOF CONSTRUCTION ONLY.
   THE ACTUAL ROOF PROJECT SHALL BE CONSTRUCTED USING THE SAME DETAILS SHOWN ON THESE DRAWINGS INCLUDING:
   a. DETAILS OF ALL PANEL MATERIAL CHARACTERISTICS AND SECTIONS WITH DIMENSIONS AND THICKNESS.
   b. ASSEMBLY DETAILS INCLUDING ALL CONNECTION'S FASTENERS DIAGRAM WITH SIZE AND LOCATION.

2A. THE MAXIMUM PANEL SPAN AND THE MAXIMUM ALLOWABLE DESIGN UP-LIFT (NEGATIVE) PRESSURE OF THIS ROOF PANEL SHALL BE BASED ON THE FOLLOWING ALLOWABLES:

DOUBLELOK 12"-24 GA. PANELS

MAXIMUM ALLOWABLE BENDING MOMENT OF PANEL AT SUPPORTS = 200.00 FT-LBS/FT
MAXIMUM ALLOWABLE BENDING MOMENT OF PANEL BETWEEN SUPPORTS = 160.00 FT-LBS/FT
MAXIMUM PANEL REACTION AT SUPPORTS = 440.00 LBS
MAXIMUM ALLOWABLE DEFLECTION OF PANEL = L/240
PANEL'S EI VALUE = 2,695,835.52 LB-IN^2
THIS ROOF PANEL IS APPROVED FOR A MAXIMUM SPAN OF 5'-0".

2B. THE MAXIMUM PANEL SPAN AND THE MAXIMUM ALLOWABLE DESIGN UP-LIFT (NEGATIVE) PRESSURE OF THIS ROOF PANEL SHALL BE BASED ON THE FOLLOWING ALLOWABLES:

DOUBLELOK 18"-24 GA. PANELS

MAXIMUM ALLOWABLE BENDING MOMENT OF PANEL AT SUPPORTS = 71.20 FT-LBS/FT
MAXIMUM ALLOWABLE BENDING MOMENT OF PANEL BETWEEN SUPPORTS = 56.96 FT-LBS/FT
MAXIMUM PANEL REACTION AT SUPPORTS = 156.64 LBS
MAXIMUM ALLOWABLE DEFLECTION OF PANEL = L/240
PANEL'S EI VALUE = 848,931.84 LB-IN^2
THIS ROOF PANEL IS APPROVED FOR A MAXIMUM SPAN OF 5'-0".

2C. THE MAXIMUM PANEL SPAN AND THE MAXIMUM ALLOWABLE DESIGN UP-LIFT (NEGATIVE) PRESSURE OF THIS ROOF PANEL SHALL BE BASED ON THE FOLLOWING ALLOWABLES:

DOUBLELOK 24"-24 GA. PANELS

MAXIMUM ALLOWABLE BENDING MOMENT OF PANEL AT SUPPORTS = 53.33 FT-LBS/FT
MAXIMUM ALLOWABLE BENDING MOMENT OF PANEL BETWEEN SUPPORTS = 42.66 FT-LBS/FT
MAXIMUM PANEL REACTION AT SUPPORTS = 117.32 LBS
MAXIMUM ALLOWABLE DEFLECTION OF PANEL = L/240
PANEL'S EI VALUE = 635,804.64 LB-IN^2
THIS ROOF PANEL IS APPROVED FOR A MAXIMUM SPAN OF 5'-0".

3. ALL PANEL SUBMEMBERS SHALL BE STEEL WITH 16 GA. MINIMUM THICKNESS.

4. THIS STRUCTURAL ROOF PANEL SYSTEM HAS BEEN DESIGNED IN ACCORDANCE WITH FLORIDA BUILDING CODE (FBC) FOR USE WITH 7TH EDITION (2020) FBC AND THE 2017 FBC AS APPLICABLE THE DESIGN PRESSURES AS DETERMINED FROM SECTION 1620 AND ASCE 7-16 MUST BE MULTIPLIED BY 0.60.

PRODUCT REVISED
as complying with the Florida Building Code
Acceptance No 21-0615.07
Expiration Date 02/25/2025
By
Miami Dade Product Control

Revison	Date	Description	By	Ck'd

NCI GROUP, INC.
CORPORATE OFFICES : 7301 FAIRVIEW DR. HOUSTON TX. 77041 (800) 777-8378
MAILING : P.O. BOX 40220 HOUSTON TX. 77240-0220

Project Name and Location:
DADE COUNTY PRODUCT APPROVAL
DADE COUNTY, FLORIDA

SHEET TITLE:
DOUBLELOK ROOF PANEL

Scale: NOT TO SCALE
Drawn by: EH
Checked by: JA
Job Number: DADE COUNTY
Sheet Number: 10/10

THESE DRAWINGS AND THE METAL COMPONENTS THEY REPRESENT ARE THE PRODUCT OF NCI GROUP OR ANOTHER DIVISION OR AFFILIATE OF NCI GROUP, INC. - 7301 FAIRVIEW DR. HOUSTON TX 77041. THE ENGINEER WHOSE SEAL APPEARS HEREON IS EMPLOYED BY NCI GROUP OR ANOTHER DIVISION OR AFFILIATE OF NCI GROUP, INC. AND IS NOT THE ENGINEER OF RECORD FOR THIS PROJECT. THESE DRAWINGS MUST BE REVIEWED FOR PROJECT COMPLIANCE BY THE ENGINEER OF RECORD.

MARK DETWILER
LICENSE
64247
STATE OF FLORIDA
PROFESSIONAL ENGINEER

6-10-21