MIAMI-DADE COUNTY
PRODUCT CONTROL SECTION
11805 SW 26 Street, Room 208
Miami, Florida 33175-2474
T (786) 315-2590 F (786) 315-2599
www.miamidade.gov/economy

DEPARTMENT OF REGULATORY AND ECONOMIC RESOURCES (RER)
BOARD AND CODE ADMINISTRATION DIVISION

NOTICE OF ACCEPTANCE (NOA)

Windoor Inc.,
104 Triple Diamond Blvd.
Orlando, FL 34275

SCOPE:

This NOA is being issued under the applicable rules and regulations governing the use of construction materials. The documentation submitted has been reviewed and accepted by Miami-Dade County RER -Product Control Section to be used in Miami Dade County and other areas where allowed by the Authority Having Jurisdiction (AHJ).

This NOA shall not be valid after the expiration date stated below. The Miami-Dade County Product Control Section (In Miami Dade County) and/or the AHJ (in areas other than Miami Dade County) reserve the right to have this product or material tested for quality assurance purposes. If this product or material fails to perform in the accepted manner, the manufacturer will incur the expense of such testing and the AHJ may immediately revoke, modify, or suspend the use of such product or material within their jurisdiction. RER reserves the right to revoke this acceptance, if it is determined by Miami-Dade County Product Control Section that this product or material fails to meet the requirements of the applicable building code.

This product is approved as described herein and has been designed to comply with the Florida Building Code, including the High Velocity Hurricane Zone.

DESCRIPTION: Series "450" Aluminum Inswing Opaque Doors w/wo Sidelites - Impact

APPROVAL DOCUMENT: Drawing No. **450FD4-NOA** Rev **B**, titled "Series 450 Inswing Doors & Sidelites", sheets 1 through 14 of 14, prepared by manufacturer, dated 06/12/20 and last revised on 08/10/2022, signed and sealed by Lynn Miller P.E., bearing the Miami-Dade County Product Control Revision stamp with the Notice of Acceptance number and expiration date by the Miami-Dade County Product Control Section.

MISSILE IMPACT RATING: Large and Small Missile Impact

Limitations:

1. Lock **10D** or **10E** is limited to max 38-9/16 W x 94-7/8 H door.
2. For mulled units lower Design pressure of doors or mullion shall control for entire assembly.
3. Sills (threshold) types S-1, SS-1 & SS-2 are not rated for water infiltration. See thresholds (sills) in sheets 9, 11, 12 and 13.
4. Narrow stile sidelites are limited to **18**" or less.
5. The frame is of alternate size must **not** exceed **125** ft^2, nor panel tested area and max. Panel height.

LABELING: Each unit shall bear a permanent label with the manufacturer's name or logo, city, state and series and following statement: "Miami-Dade County Product Control Approved", noted herein.

RENEWAL of this NOA shall be considered after a renewal application has been filed and there has been no change in the applicable building code negatively affecting the performance of this product.

TERMINATION of this NOA will occur after the expiration date or if there has been a revision or change in the materials, use, and/or manufacture of the product or process. Misuse of this NOA as an endorsement of any product, for sales, advertising or any other purposes shall automatically terminate this NOA. Failure to comply with any section of this NOA shall be cause for termination and removal of NOA.

ADVERTISEMENT: The NOA number preceded by the words Miami-Dade County, Florida, and followed by the expiration date may be displayed in advertising literature. If any portion of the NOA is displayed, then it shall be done in its entirety.

INSPECTION: A copy of this entire NOA shall be provided to the user by the manufacturer or its distributors and shall be available for inspection at the job site at the request of the Building Official.

This NOA **revises & renews # 20-0619.09 (PLA)** consists of this page 1 and evidence pages E-1, E-2, E-3, E-4 & E-5, as well as approval document mentioned above.

The submitted documentation was reviewed by **Ishaq I. Chanda, P.E.**

MIAMI-DADE COUNTY APPROVED

Ishaq I. Chanda

NOTICE OF ACCEPTANCE: EVIDENCE SUBMITTED

1. Evidence submitted in previous NOA

A. DRAWINGS

1. Drawing No. **W12-23 Rev B**, titled "Series 450 Inswing Doors & Sidelites", sheets 1, 1.1, 1.2, 2, 2.1, 2.2, 3, 3.1, 4, 5, 6, 7 7.1 and 7.2 of 7, prepared by Al-Farooq Corporation, dated 10-27-06 and last revised on AUG 27, 2015, signed and sealed by Javad Ahmad, P.E.

B. TESTS

1. None.

C. CALCULATIONS

1. None.

D. QUALITY ASSURANCE

1. Miami Dade Department of Regulatory and Economic Resources (RER).

E. MATERIAL CERTIFICATIONS

1. None

F. STATEMENTS

1. Statement letter of conformance to FBC 2014(**5th Edition**) and letter of no financial interest, prepared by Al Farooq Corporation, dated 10/03/14, signed and sealed by Javad Ahmad, P.E.

G. OTHER

1. This NOA **revises # 14-1103.06**, expiring on 10/25/17

2. Evidence submitted in previous NOA

A.

1. Manufacturer's die drawings and sections (Submitted under files below).
2. Drawing No. **W12-23 Rev B**, titled "Series 450 Inswing Doors & Sidelites", sheets 1, 1.1, 1.2, 2, 2.1, 2.2, 3, 3.1, 4, 5, 6, 7 7.1 and 7.2 of 7, prepared by Al-Farooq Corporation, dated 10-27-06 and last revised on AUG 27, 2015, signed and sealed by Javad Ahmad, P.E.

B. TESTS (Submitted under files #**12-0706.01**)

1. Test reports on: 1) Air Infiltration Test, per FBC, TAS 202-94
   2) Uniform Static Air Pressure Test, Loading per FBC TAS 202-94
   3) Water Resistance Test, per FBC, TAS 202-94(+50.0 PSF, sill S-I only)
   4) Large Missile Impact Test per FBC, TAS 201-94
   5) Cyclic Wind Pressure Loading per FBC, TAS 203-94
   6) Forced Entry Test, per FBC 2411 3.2.1, TAS 202-94

Along with manufacturer's parts and section drawing marked-up drawings of aluminum In swing / Outswing door w/wo sidelites, by Hurricane Testing Laboratory, Inc., Test Report No. **HTL-0080-0304-11** dated 11/28/2011 and **HTL-0080-0902-11**, signed and sealed by Vinu J. Abraham, P.E. Note: This test report has been revised by addendum letters, issued by Architectural Testing (Former Hurricane Testing Lab), dated 01/20/12 & 04/03/12, both signed & sealed by Vinu J. Abraham, P.E.

Along with manufacturer's parts and section drawing marked-up drawings of double aluminum outswing doors, issued by Architectural Testing, Test Report No(s) **B-5234.02-450-18** dated 12/19/2011, signed and sealed by Vinu J. Abraham, P.E.

Ishaq I. Chanda

Ishaq I. Chanda, P.E.
Product Control Unit Supervisor
NOA No 22-0822.05
Expiration Date: October 25, 2027
Approval Date: September 29, 2022

NOTICE OF ACCEPTANCE: EVIDENCE SUBMITTED

B. TESTS (continue)

2. Test reports on: 1) Air Infiltration Test, per FBC, TAS 202-94
   2) Uniform Static Air Pressure Test, Loading per FBC TAS 202-94
   3) Water Resistance Test, per FBC, TAS 202-94
   4) Large Missile Impact Test per FBC, TAS 201-94
   5) Cyclic Wind Pressure Loading per FBC, TAS 203-94
   6) Forced Entry Test, per FBC 2411 3.2.1, TAS 202-94.

Along with manufacturer's parts and section drawing marked-up drawings of aluminum In/out swing door w/sidelites, by Hurricane Testing Laboratory, Inc., Test Report No. **HTL-97055 (0080-912-97)** dated 09/23/97 thru 02/27/98 for specimen #1, 2, 3, 4 tested per PA202-94, specimen #4, 5A, 5B, 5C tested per PA201-94 & PA203-94, signed and sealed by Timothy S. Marshall, P.E.

Along with manufacturer's parts and section drawing marked-up drawings of aluminum out swing door w/sidelites, by Hurricane Testing Laboratory, Inc., Test Report No. **HTL-01071 (0080-0402-02)** dated 04/01/2002 tested per PA201-94 & PA203-94, signed and sealed by Vinu J. Abraham, P.E. **(**submitted in file # **09-0723.04**). Original tests conducted per SFBC, PA 201, 202 &203-94 now known as FBC, TAS 201, 202 & 203-94.

3. Reference Certified Testing Laboratories test report # CTLA **3056WA**, issued to CGI Windows & Doors Inc. pert TAS 201, 202 and 203-94 for specimen #1 thru #30 for laminated PVB glass, insulated PVB laminated glass with Duraseal and super spacers, signed and sealed by Ramesh C. Patel, P.E.

C. CALCULATIONS

1. Anchor verification calculations and structural analysis, complying with FBC-2014(**5th Edition**), prepared by Al Farooq Corporation, dated 10/27/14 and last revised on AUG 27, 2015, signed and sealed by Javad Ahmad, P.E.
2. Additional intermediate horizontal mull calculations, prepared by Al Farooq Corporation, dated JUN 29, 2012, signed and sealed by Javad Ahmad, P.E. (Submitted under file # **11-1025.03**)

B. QUALITY ASSURANCE

1. Miami Dade Department of Regulatory and Economic Resources (RER).

C. MATERIAL CERTIFICATIONS

1. None

D. STATEMENTS

1. Statement letter of conformance to FBC 2014(**5th Edition**) and letter of no financial interest, prepared by Al Farooq Corporation, dated 10/03/14, signed and sealed by Javad Ahmad, P.E.
2. Lab compliance and addendum letters, as part of the above referenced test reports.

G. OTHER

1. This NOA **revises # 12-0706.01**, expiring on 10/25/17.
2. Hardware cut sheets verified and marked-up by the Architectural Testing (former Hurricane Testing lab).
3. Test proposals dated 12/16/14 approved by RER & Test proposal # **10-0940**, dated 11/17/10 approved by BNC.

Ishaq I. Chanda

Ishaq I. Chanda, P.E.
Product Control Unit Supervisor
NOA No 22-0822.05
Expiration Date: October 25, 2027
Approval Date: September 29, 2022

NOTICE OF ACCEPTANCE: EVIDENCE SUBMITTED

3. Evidence submitted under previous approval.

A. DRAWINGS

1. Drawing No.**18-108D**, titled "Series 450 Inswing Doors & Sidelites", sheets 1, 1.1, 1.2, 2, 2.1, 2.2, 3, 3.1, 4, 5, 6, 7 7.1 and 7.2 of 7, prepared by Al-Farooq Corporation, dated SEP 19, 2018, signed and sealed by Javad Ahmad, P.E.

B. TESTS

1. None.

C. CALCULATIONS

1. None.

D. QUALITY ASSURANCE

1. Miami Dade Department of Regulatory and Economic Resources (RER).

E. MATERIAL CERTIFICATIONS

1. None.

F. STATEMENTS (Submitted under files #**14-1103.08)**

1. Statement letter of conformance to FBC 2017 (**6th Edition**) and letter of private label, prepared by Al Farooq Corporation, dated 09/19/18, signed and sealed by Javad Ahmad, P.E.

G. OTHER

1. This NOA **revises # 17-1011.13(PLA)**, expiring on November 09, 2021.
2. Private Label Agreement (PLA) between CGI Windows and Doors, Inc. and Windoor Inc., signed by Dean M. Ruark, P.E., Vice President on behalf of both companies.
3. Reference CGI NOA # 17-1011.13 (#14-1103.06), expiring 11/09/21.

4. New Evidence submitted

A. DRAWINGS

1. Drawing No. **450FD4-NOA** Rev **A** (former **18-108D**), titled "Series 450 Inswing Doors & Sidelites", sheets 1 through 14 of 14, prepared by manufacturer, dated 06/12/20, signed and sealed by Lynn Miller, P.E.

B. TESTS

1. Test reports on: 1) Air Infiltration Test, per FBC, TAS 202-94
2) Uniform Static Air Pressure Test, Loading per FBC, TAS 202-94
3) Water Resistance Test, per FBC, TAS 202-94
4) Large Missile Impact Test per FBC, TAS 201-94
5) Cyclic Wind Pressure Loading per FBC, TAS 203-94

along with marked-up drawings and installation diagram of all PGT Industries, Inc., CGI Windows and Doors, Inc. and WinDoor, Inc. representative units listed below and tested to qualify **Dowsil 791** and **Dowsil 983** silicones, per Proposal #**19-1155TP**, prepared by Fenestration Testing Laboratory, Inc., Test Reports No.:

WinDoor, Inc. test specimens:

FTL-20-2078.1, WinDoor PW3000 Aluminum Fixed Lite (unit 11 in proposal)
FTL-20-2078.2, WinDoor HR9470 Thermally Broken Alum. Horiz. Roller (unit 12)
FTL-20-2078.3, WinDoor SGD8100 Alum. Sliding Glass Door (unit 13 in proposal)
FTL-20-2078.4, WinDoor HR9470 Thermally Broken Alum. Horiz. Roller (unit 14)

Ishaq I. Chanda

Ishaq I. Chanda, P.E.
Product Control Unit Supervisor
NOA No 22-0822.05
Expiration Date: October 25, 2027
Approval Date: September 29, 2022

NOTICE OF ACCEPTANCE: EVIDENCE SUBMITTED

B. TESTS (continue)

WinDoor, Inc. test specimens (conti:)

FTL-20-2078.5, WinDoor PW9020 Alum. Fixed Lite (unit 15 in proposal) and
FTL-20-2078.6, WinDoor PW9020 Alum. Fixed Lite (unit 16 in proposal)
all dated 09/24/20 and signed and sealed by Idalmis Ortega, P.E.

PGT Industries, Inc. test specimens:

FTL-7897, PGT PW5520 PVC Fixed Window (unit 6 in proposal), dated 09/03/14
FTL-20-2107.1, PGT SGD780 Aluminum Sliding Glass Door (unit 7 in proposal) **FTL-20-2107.2,** PGT CA740 Alum. Outswing Casement Window (unit 8 in proposal) **FTL-20-2107.3,** PGT PW7620A Aluminum Fixed Window (unit 9 in proposal) and **FTL-20-2107.4**, PGT PW7620A Aluminum Fixed Window (unit 10 in proposal)
all dated 07/13/20 and signed and sealed by Idalmis Ortega, P.E.

CGI Windows and Doors Inc. test specimens:

FTL-20-2108.1, CGI SH360 Aluminum Single Hung Window (unit 1 in proposal) **FTL-20-2108.2,** CGI CA238 Alum. Outswing Casement Window (unit 2 in proposal) **FTL-20-2108.3,** CGI SGD560 Aluminum Sliding Glass Door (unit 3 in proposal) FTL**-20-2108.4**, CGI PW410 Aluminum Fixed Window (unit 4 in proposal) and **FTL-20-2108.5**, CGI SH360 Aluminum Single Hung Window (unit 5 in proposal)
all dated 08/24/20 and signed and sealed by Idalmis Ortega, P.E.

C. CALCULATIONS

1. **1**. Anchor verification calculations and structural analysis, complying with **FBC 7th Edition (2020)**, dated 03/26/20 and revised on 06/20/20, prepared by manufacturer, signed and sealed by Anthony Lynn Miller, P.E.

D. QUALITY ASSURANCE

1. Miami Dade Department of Regulatory and Economic Resources (RER).

E. MATERIAL CERTIFICATIONS

1. None.

F. STATEMENTS

1. Statement letter of conformance to FBC 2020 (**7th** Edition), issued by manufacturer, dated 6/20/20, signed and sealed by Lynn Miller, P. E.
2. Notification of Successor Engineer per the Florida Administrative Code Section 61G15-27.001, notifying original engineer that the successor engineer is assuming full professional and legal responsibility for all engineering documents pertaining to this NOA, dated 06/03/20, signed and sealed by A. Lynn Miller, P.E.
3. Private Label Agreement dated 07/17/20 between Windoors, Inc. and CGI Windows and Doors, signed by Dean M. Ruark, P.E., V.P. Eng., on behalf of respective companies

G. OTHER

1. This NOA **revises 18-0926.07 (PLA),** updates to FBC 2020**,** expiring 11/09/21.
2. Additional associated reference file #**20-0610.10 (LMI).**
3. RER Test proposals #**19-1155** dated 01/10/20 approved by Ishaq I. Chanda, P.E.

Ishaq I. Chanda

Ishaq I. Chanda, P.E.
Product Control Unit Supervisor
NOA No 22-0822.05
Expiration Date: October 25, 2027
Approval Date: September 29, 2022

NOTICE OF ACCEPTANCE: EVIDENCE SUBMITTED

5. New Evidence submitted

B. DRAWINGS

1. Drawing No. **450FD4-NOA** Rev **B**, titled "Series 450 Inswing Doors & Sidelites", sheets 1 through 14 of 14, prepared by manufacturer, dated 06/12/20 and last revised on 08/10/2022, signed and sealed by Lynn Miller, P.E.

B. TESTS

1. None.

C. CALCULATIONS (submitted under previous approval**)**

1. Anchor verification calculations and structural analysis, complying with **FBC 7th Edition (2020)**, dated 03/26/20 and revised on 06/20/20, prepared by manufacturer, signed and sealed by Anthony Lynn Miller, P.E.

D. QUALITY ASSURANCE

1. Miami Dade Department of Regulatory and Economic Resources (RER).

E. MATERIAL CERTIFICATIONS

1. None.

F. STATEMENTS

1. Statement letter of conformance to FBC 2020 (**7th** Edition), issued by manufacturer, dated 08/15/2022, signed and sealed by Lynn Miller, P. E.
2. Statement letter of conformance to FBC 2020 (**7th** Edition), issued by manufacturer, dated 6/20/20, signed and sealed by Lynn Miller, P. E.

G. OTHER (item #2 submitted under previous approval**)**

1. This NOA **revises** & **renews # 20-0619.09 (PLA)**, expiring on October 25, 2027.
2. Private Label Agreement (PLA) dated 09/05/18 between CGI Windows and Doors, Inc. and Windoor Inc., signed by Dean M. Ruark, P.E., Vice President on behalf of both companies.
3. Reference CGI NOA # 22-0822.02 (# 20-0619.05) # 17-1011.13 (#14-1103.06), expiring 10/25/27

Ishaq I. Chanda, P.E.
Product Control Unit Supervisor
NOA No 22-0822.05
Expiration Date: October 25, 2027
Approval Date: September 29, 2022

SERIES 450 ALUM. INSWING OPAQUE DOORS WITH OR WITHOUT SIDELITES, LARGE & SMALL MISSILE

1) THIS PRODUCT HAS BEEN DESIGNED AND TESTED TO COMPLY WITH THE REQUIREMENTS OF THE 2020 (7th EDITION) FLORIDA BUILDING CODE (FBC) INCLUDING THE HIGH VELOCITY HURRICANE ZONE (HVHZ). THIS DOOR IS NOT RATED FOR WATER INFILTRATION RESISTANCE AND MUST ONLY BE INSTALLED WHERE WATER INFILTRATION RESISTANCE IS NOT REQUIRED OR AN OVERHANG IS PROVIDED PER FIG. 2, THIS SHEET.

2) 1BY OR 2BY WOOD BUCKS & BUCK FASTENERS BY OTHERS, MUST BE DESIGNED AND INSTALLED ADEQUATELY TO TRANSFER APPLIED PRODUCT LOADS TO THE BUILDING STRUCTURE.

3) ANCHORS SHALL BE CORROSION RESISTANT, SPACED AS SHOWN ON DETAILS AND INSTALLED PER MANUF'S INSTRUCTIONS. SPECIFIED EMBEDMENT TO BASE MATERIAL SHALL BE BEYOND WALL DRESSING OR STUCCO.

4) A LOAD DURATION INCREASE IS USED IN DESIGN OF ANCHORS INTO WOOD ONLY.

5) ALL SHIMS TO BE HIGH IMPACT, NON-METALLIC AND NON-COMPRESSIBLE.

6) MATERIALS INCLUDING BUT NOT LIMITED TO STEEL/METAL SCREWS, THAT COME INTO CONTACT WITH OTHER DISSIMILAR MATERIALS SHALL MEET THE REQUIREMENTS OF THE FBC & ADOPTED STANDARDS.

7) THIS PRODUCT APPROVAL IS GENERIC AND DOES NOT PROVIDE INFORMATION FOR A SITE SPECIFIC PROJECT, I.E. LIFE SAFETY OF THIS PRODUCT, ADEQUACY OF STRUCTURE RECEIVING THIS PRODUCT AND SEALING AROUND OPENING FOR WATER INFILTRATION RESISTANCE ETC. CONDITIONS NOT SHOWN IN THIS DRAWING ARE TO BE ANALYZED SEPARATELY, AND TO BE REVIEWED BY BUILDING OFFICIAL.

8) EGRESS REQUIREMENTS TO BE REVIEWED BY BUILDING OFFICIAL.

FIG. 1

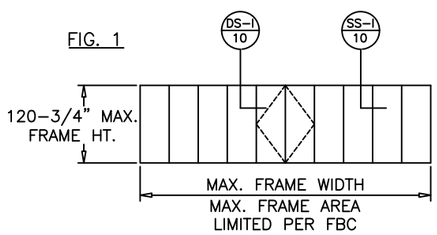

MULTIPLE SIDELITES W/ DOORS WITHIN TESTED FRAME AREA ARE AVAILABLE (SEE SHEET 11) 125 SQ. FT. TESTED FRAME AREA

LEGEND

H-I / 7 = DOOR DETAIL / SHEET #

= ITEM PART NUMBER

STEPS TO USE CHARTS:

1) DETERMINE WIND LOAD BASED ON PROVISIONS OF THE FBC.

2) CONFIRM THAT FIG. 2, THIS SHEET, APPLIES OR THAT WATER INFILTRATION RESISTANCE IS NOT REQUIRED.

3) SELECT A DOOR SYSTEM I.E. INSWING AND TYPE OF THRESHOLD FROM SHEET 11 AND LOCK OPTIONS FROM SHEET 2.

4) CHECK THE ALLOWABLE EXTERIOR AND INTERIOR LOADS FROM APPROPRIATE CHARTS ON SHEETS 2, 10 & 11. THE ALLOWABLE LOADS MUST MEET OR EXCEED THE DESIGN LOADS REQUIREMENTS.

5) SELECT AND CHECK ANCHORS TO MEET LOAD. (SEE SHEETS 12 & 13)

6) FOR MULLED SIDELITE REFER TO MULLION CAPACITY ON SHEET 10.

7) LOWER DESIGN PRESSURE FROM LOCKS CHART, PANEL PERFORMANCE CHART, MULLION PERFORMANCE CHART AND ANCHOR CAPACITY CHARTS AT MULLION AND MTG. STILE ENDS SHALL CONTROL THE ENTIRE SYSTEM.

8) MATERIALS INCLUDING BUT NOT LIMITED TO STEEL/METAL SCREWS, THAT COME INTO CONTACT WITH OTHER DISSIMILAR MATERIALS SHALL MEET THE REQUIREMENTS OF THE FBC.

FIG. 2

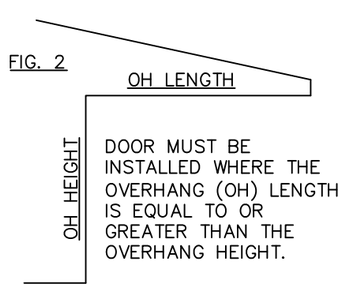

DOOR MUST BE INSTALLED WHERE THE OVERHANG (OH) LENGTH IS EQUAL TO OR GREATER THAN THE OVERHANG HEIGHT.

TYPICAL ELEVATIONS

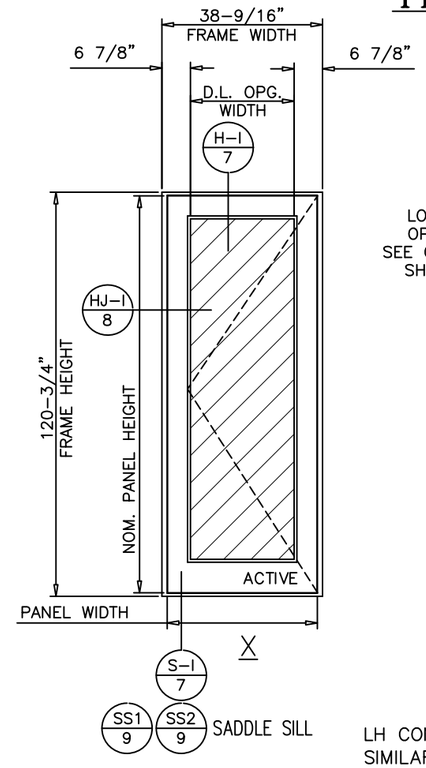

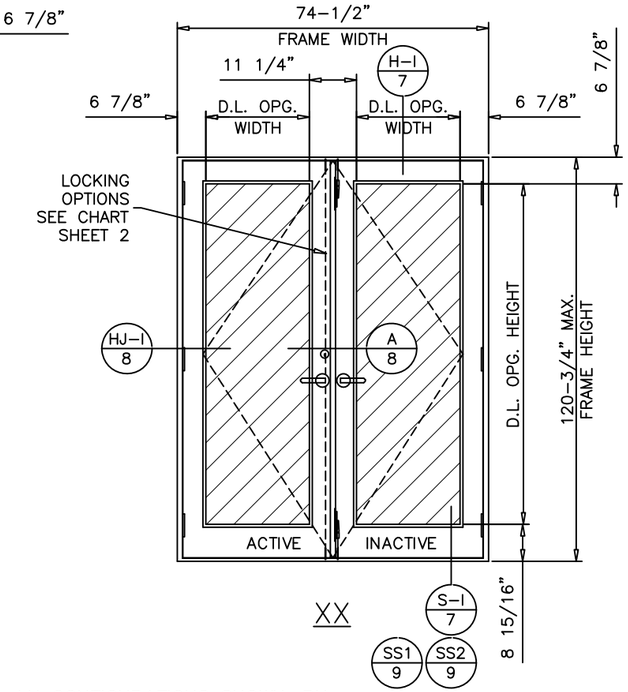

LH CONFIGURATIONS SHOWN, RH SIMILAR (SEE SHEET 2 FOR SIZES)

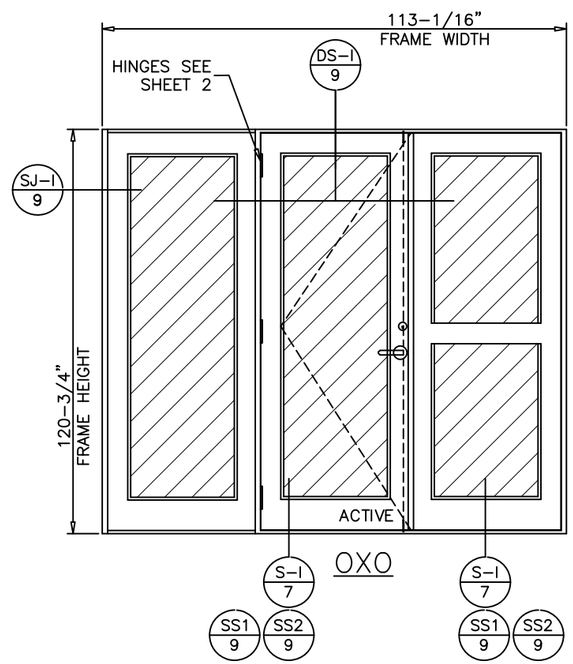

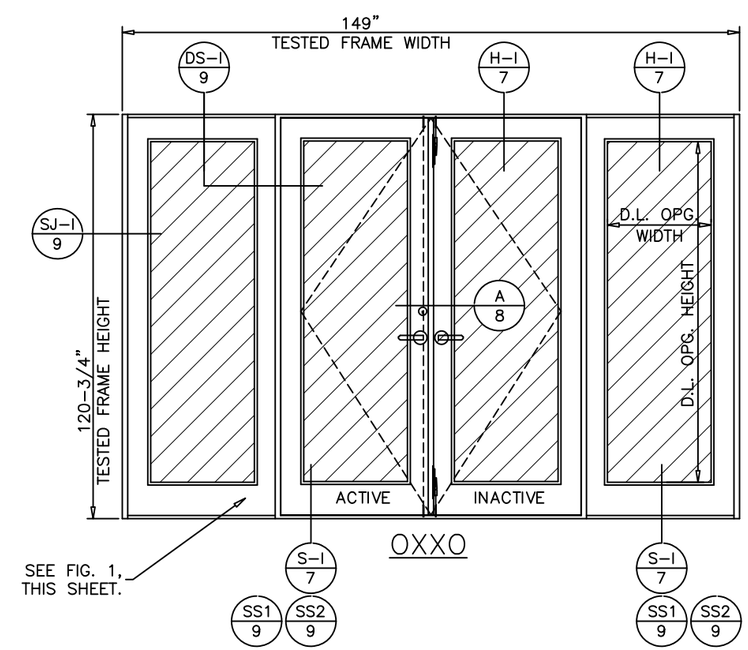

PRODUCT REVISED
as complying with the Florida Building Code
NOA-No. 22-0822.05
Expiration Date 10/25/2027
By Ishwar I. Chanda
Miami-Dade Product Control

Revision: CLARIFIED WATER INFILTRATION RESISTANCE REQUIREMENTS - JR - 8/10/22

PREPARED BY A. LYNN MILLER
1070 TECHNOLOGY DRIVE
N. VENICE, FL 34275
(941) 480-1600
REGISTRATION #29296

WINDOOR® INCORPORATED
104 TRIPLE DIAMOND BLVD.
N. VENICE, FL 34275
(407) 481-8400

Series	Desc.	Sheet	Scale	DWG No.	Rev.
FD450 INSWING	GEN. NOTES AND ELEVATIONS	1 OF 14	NTS	450FD4B-NOA	B

Title: 450 ALUM. FRENCH DOOR - OPAQUE & IS (LM)
Date: 06/12/2020
Drawn By: J ROSOWSKI

ANTHONY LYNN MILLER LICENSE No. 58705 STATE OF FLORIDA PROFESSIONAL ENGINEER
08/10/22

A. LYNN MILLER, P.E.
P.E.# 58705

HARDWARE DESCRIPTION, TYPICAL ELEVATIONS

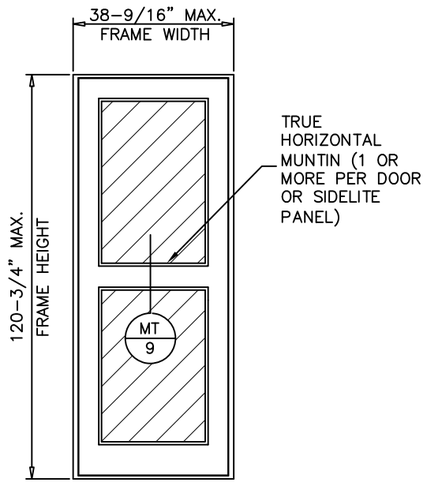

X OR O

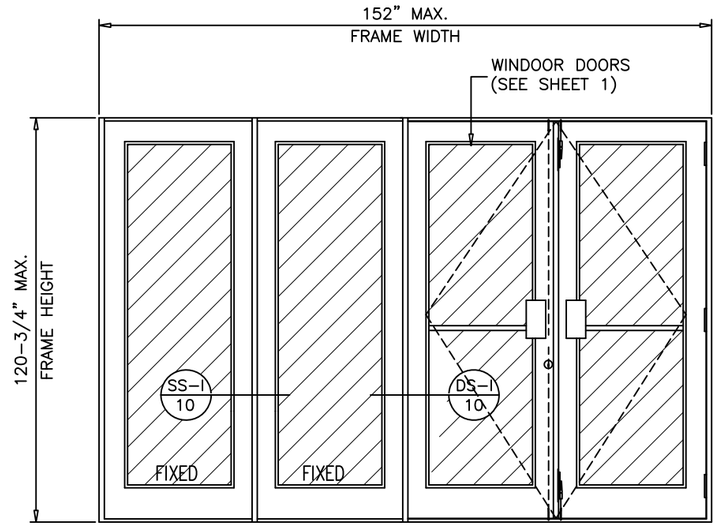

OOXX

HINGE LOCATIONS		
MAX. FRAME HEIGHT	NO. REQD.	MAX. SPACING
UP TO 90–3/4"	3	35 1/2"
ABOVE 90–3/4" UPTO 120–3/4"	4	44 1/2"

DOORS WITH 3 HINGES LIMITED TO 100 PSF

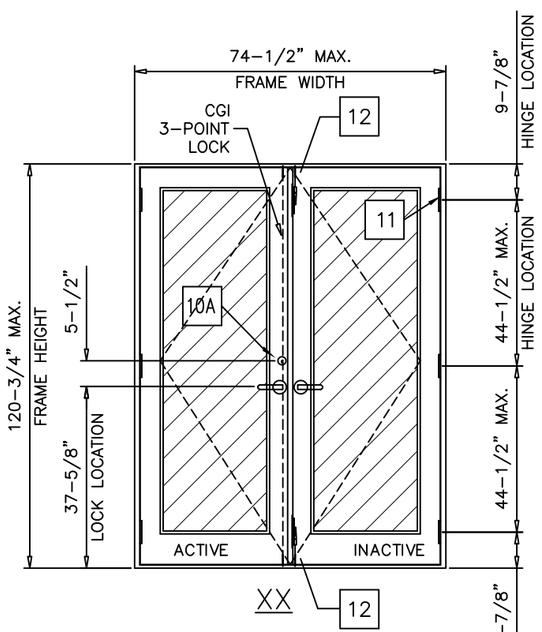

XX

RESIDENTIAL HARDWARE

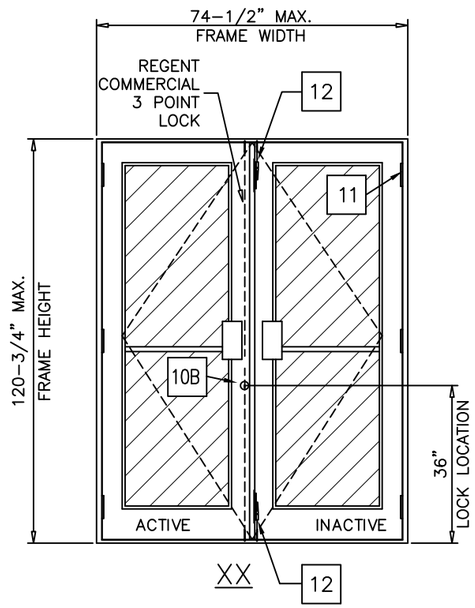

XX

COMMERCIAL HARDWARE

LOCK OPTIONS AND CAPACITY

	10A		10AA		10B		10C & 10CC		10 F	
FRAME HEIGHT	EXT.(+)	INT.(–)	EXT.(+)	INT.(–)	EXT.(+)	INT.(–)	EXT.(+)	INT.(–)	EXT.(+)	INT.(–)
84–3/4"	90.0	90.0	100.0	110.0	100.0	110.0	65.0	65.0	100.0	110.0
96–3/4"	90.0	90.0	100.0	110.0	100.0	110.0	65.0	65.0	90.0	90.0
108–3/4"	–	–	100.0	110.0	100.0	110.0	–	–	90.0	90.0
120–3/4"	–	–	70.0	70.0	70.0	70.0	–	–	70.0	70.0

10A : COPPER CREEK W/ CGI 3 POINT
10AA : BALDWIN W/ CGI 3 POINT
10B : REGENT COMMERCIAL 3 POINT
10C : BALDWIN SINGLE POINT LOCK
10CC : COPPER CREEK SINGLE POINT LOCK
10F : SURFACE MOUNTED LOCK

FRAME WIDTH (X)	FRAME WIDTH (XX)	DOOR/SIDELITE PANEL WIDTH	D.L. OPG. WIDTH
26–9/16"	50–1/2"	23–3/4"	12–3/4"
32–9/16"	62–1/2"	29–3/4"	18–3/4"
38–9/16"	74–1/2"	35–3/4"	24–3/4"
44–9/16"	86–1/2"	41–3/4"	30–3/4"

LEGEND

H–I / 7 = DOOR DETAIL / SHEET #

☐ = ITEM PART NUMBER

FRAME HEIGHT	DOOR/SIDELITE PANEL * HEIGHT	D.L. OPG. HEIGHT
82–3/4"	80–7/8"	67–3/8"
84–3/4"	82–7/8"	69–3/8"
90–3/4"	88–7/8"	75–3/8"
96–3/4"	94–7/8"	81–3/8"
102–3/4"	100–7/8"	87–3/8"
108–3/4"	106–7/8"	93–3/8"
114–3/4"	112–7/8"	99–3/8"
120–3/4"	118–7/8"	105–3/8"

* HEIGHTS FOR STD. THRESHOLD

LH CONFIGURATIONS SHOWN, RH SIMILAR (SEE SHEET 2 FOR SIZES)

FRAME HEIGHT = PANEL HEIGHT + 1–7/8" (STD. THRESHOLD)
FRAME HEIGHT = PANEL HEIGHT + 1–5/8" (ADA THRESHOLD)
FRAME WIDTH = PANEL WIDTH + 2–13/16"

PRODUCT REVISED
as complying with the Florida Building Code
NOA–No. 22-0822.05
Expiration Date 10/25/2027
By Ishwar I. Chanda
Miami–Dade Product Control

Revision:

PREPARED BY A. LYNN MILLER
1070 TECHNOLOGY DRIVE
N. VENICE, FL 34275
(941) 480-1600
REGISTRATION #29296

WINDOOR® INCORPORATED
104 TRIPLE DIAMOND BLVD.
N. VENICE, FL 34275
(407) 481-8400

Series	Desc.	Title	Scale	Sheet	DWG No.	Rev.
FD450 INSWING	DESIGN PRESSURES AND ELEVATIONS	450 ALUM. FRENCH DOOR - OPAQUE & IS (LM)	NTS	2 OF 14	450FD4B-NOA	B

Drawn By	Date
J ROSOWSKI	06/12/2020

ANTHONY LYNN MILLER
LICENSE
No. 58705
A. Lynn Miller
08/10/22
STATE OF FLORIDA
PROFESSIONAL ENGINEER

A. LYNN MILLER, P.E.
P.E.# 58705

GLAZING OPTIONS

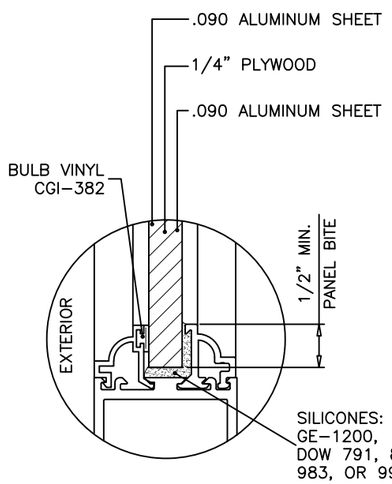

7/16" OVERALL
COMPOSITE PANEL

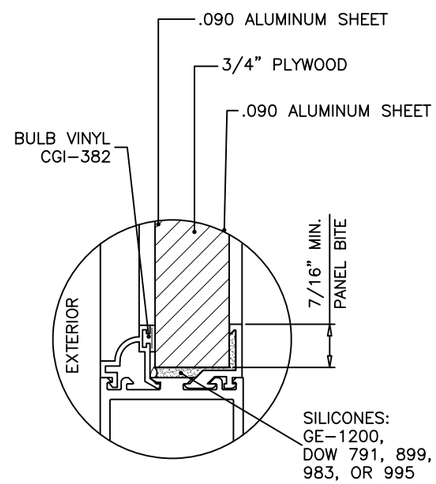

1" OVERALL
COMPOSITE PANEL

GLAZING STOP OPTIONS

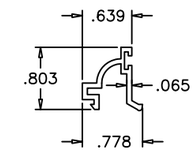

CGI-375

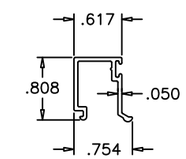

CGI-396

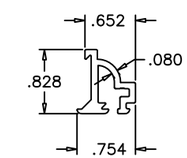

CGI-504

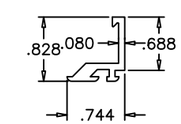

CGI-515

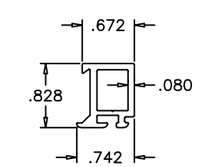

CGI-519

DOORS AND SIDELITES CAN BE GLAZED USING SQUARE OR OGEE GLAZING BEADS/ADAPTERS

PRODUCT REVISED
as complying with the Florida Building Code
NOA-No. 22-0822.05
Expiration Date 10/25/2027
By Ishwar I. Chanda
Miami-Dade Product Control

Revision:

PREPARED BY A. LYNN MILLER
1070 TECHNOLOGY DRIVE
N. VENICE, FL 34275
(941) 480-1600

REGISTRATION #29296

WINDOOR® INCORPORATED
104 TRIPLE DIAMOND BLVD.
N. VENICE, FL 34275
(407) 481-8400

Title	Date	Drawn By	DWG No.	Rev.
450 ALUM. FRENCH DOOR - OPAQUE & IS (LM)	06/12/2020	J ROSOWSKI	450FD4B-NOA	B

Desc.	Sheet	Scale
GLAZING DETAILS	3 OF 14	NTS

Series: FD450 INSWING

ANTHONY LYNN MILLER
LICENSE
No. 58705
A. Lynn Miller
08/10/22
STATE OF FLORIDA
PROFESSIONAL ENGINEER

A. LYNN MILLER, P.E.
P.E.# 58705

BILL OF MATERIALS

ITEM	DESCRIPTION
1	#12 X 1 1/4" HEX HEAD S/S SMS (3 PER CORNER CONNECTION)
2A	3/8–16 FULLY THREADED CONTINUOUS ROD
2B	3/8–16 HEX NUT
2C	1 1/2" X 1 1/2" X 3/16"THK. ALUMINUM PLATE
3	SHEAR CLIP (EXT. NO. 506)
4	DOUBLE 9/32" DIA. JAMB INSTLL. HOLES AT 6" FROM ENDS & 24" O.C. MAX.
5	9/32" DIA. HEAD & SILL INSTLL. HOLES AT 6" FROM ENDS, 3 @ CENTER OF PAIRS SPACED 6" O.C. & 24" O.C. MAX.
6	#10 X 1" PH–PH–SS TEKS SCREW, @ 3" & 7" FROM ENDS & 19–3/8" O.C. MAX.
7	#14 X 3/4" HEX HEAD S/S TEKS SCREW AT 6" FROM ENDS & 24 3/16" O.C. MAX.
8	.320 HIGH WOOL PILE WITH CENTER FIN (ULTRAFAB # 3032)
9	.350 HIGH FOAM–TITE WEATHERSEAL (AMESBURY # 32011)
10	ACTIVE PANEL LOCK OPTIONS (SEE SHEET 1.1 FOR LIMITS)
10A	CGI CUSTOM 3 POINT LOCK 4503PL, CONSISTING OF (2) CGI CUSTOM END BOLTS (TOP & BOTTOM), ATTACHED WITH #10 X 3/4" PH SMS, (1) CGI CUSTOM INTERIOR LINKAGE MECHANISM, (1) DEADBOLT BY COPPER CREEEK SERIES E MODEL D82410.
10AA	CGI CUSTOM 3 POINT LOCK 4503PL, CONSISTING OF (2) CGI CUSTOM END BOLTS (TOP & BOTTOM), ATTACHED WITH #10 X 3/4" PH SMS, (1) CGI CUSTOM INTERIOR LINKAGE MECHANISM, (1) DEADBOLT BY BALDWIN SERIES 8200, KWIKSET 780.
10B	REGENT COMMERCIAL 2222 THREE POINT LOCK MECHANISM WITH MORTISE LOCK.
10C	SINGLE POINT LOCK (1) DEADBOLT BY BALDWIN SERIES 8200.
10CC	SINGLE POINT LOCK (1) DEADBOLT BY COPPER CREEK SERIES D82410.
10F	CGI CUSTOM SURFACE MOUNTED SLIDE BOLTS WITH CGI END BOLTS AT ACTIVE LEAF (AT TOP & BOTTOM) WITH BALDWIN SERIES 8200 DEAD BOLT.
11	HAGER 4 1/2" X 4" HINGE IN SOLID BRASS OR STAINLESS STEEL CGI 4–1/2" X 4" HINGE IN ALUMINUM SECURED WITH (8) #12–24 X 1/2" F.H. M.S. (3 PER PANEL UP TO 7'–6 3/4" HIGH) (4 PER PANEL OVER 7'–6 3/4")
12	CGI FLUSHBOLT AT TOP & BOTTOM OF INACTIVE LEAF, HOUSING ATTACHED TO PANEL STILE WITH #10 X 3/4" PH SMS, ACTIVATOR ATTACHED WITH #8 X 1/2" PH SMS.
13	SEE SHEET 3 FOR GLAZING OPTIONS
14	SILICONES: GE–1200, DOW 791, 899, 983, OR 995
17	1/2" X 1/2" CONTINUOUS CLOSED CELL FOAM TAPE WITH ONE SIDE ADHESIVE
18	PLASTIC WEEP BAFFLE
19	7/8" X 5" X 1/8" THK. CONTINUOUS ALUMINUM SILL ANGLE ADAPTER

EXTRUSION LIST: 500A, 501, 502, 503, 504, 507, 509, 510, 514, 515, 519, 539, & 540 ALL EXTRUSIONS ARE 6063–T6. 375, 396, 505, 508, 511 EXTRUSIONS ARE 6063–T5.

Material	Min. F_y	Min. F_u
#14 Steel Screw, Gr 5	81 ksi	105 ksi
1/4" Elco UltraCon	155 ksi	177 ksi
1/4" DeWalt UltraCon+	148 ksi	164 ksi
5/16" Elco UltraCon	155 ksi	177 ksi
5/16" DeWalt UltraCon+	155 ksi	177 ksi
6063-T5 Aluminum	16 ksi	22 ksi
A36 Steel	36 ksi	58 ksi
Gr. 33 Steel Stud	33 ksi	45 ksi

PRODUCT REVISED
as complying with the Florida Building Code
NOA–No. 22-0822.05
Expiration Date 10/25/2027
By Ishwar I. Chanda
Miami–Dade Product Control

Revision:

PREPARED BY A. LYNN MILLER
1070 TECHNOLOGY DRIVE
N. VENICE, FL 34275
(941) 480-1600
REGISTRATION #29296

WINDOOR® INCORPORATED
104 TRIPLE DIAMOND BLVD.
N. VENICE, FL 34275
(407) 481-8400

Title	450 ALUM. FRENCH DOOR - OPAQUE & IS (LM)
Date	06/12/2020
Drawn By	J ROSOWSKI
Rev.	B
Desc.	BILL OF MATERIALS
DWG No.	450FD4B-NOA
Series	FD450 INSWING
Scale	NTS
Sheet	4 OF 14

ANTHONY LYNN MILLER
LICENSE
No. 58705
A. Lynn Miller
08/10/22
STATE OF FLORIDA
PROFESSIONAL ENGINEER

A. LYNN MILLER, P.E.
P.E.# 58705

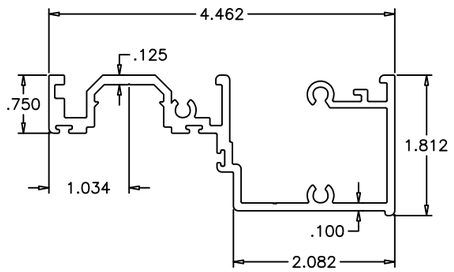

CGI–507
DOOR FRAME HEAD/SILL

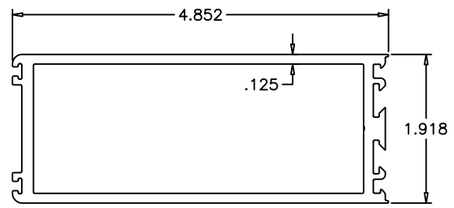

CGI–502
JAMB/LOCK/SIDELITE STILE

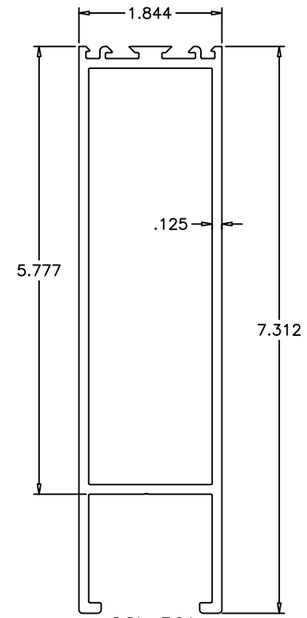

CGI–501
BOTTOM RAIL

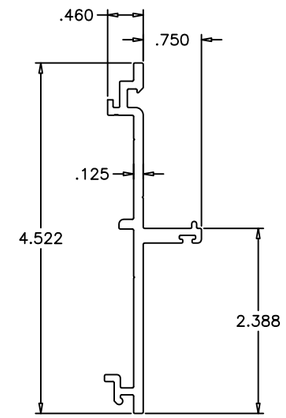

CGI–510
SIDELITE MULLION

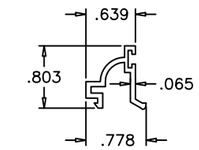

CGI–375

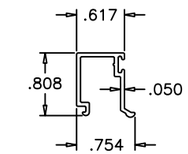

CGI–396

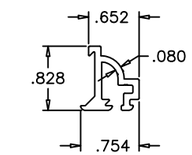

CGI–504

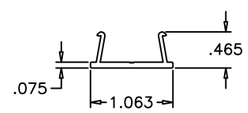

CGI–508
FRAME COVER

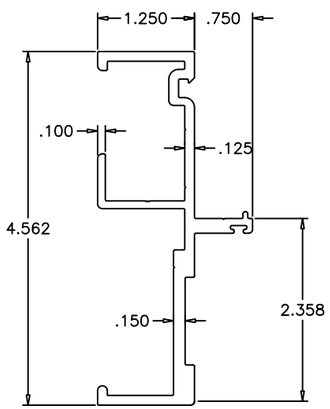

CGI–509
FRAME JAMB/MULLION

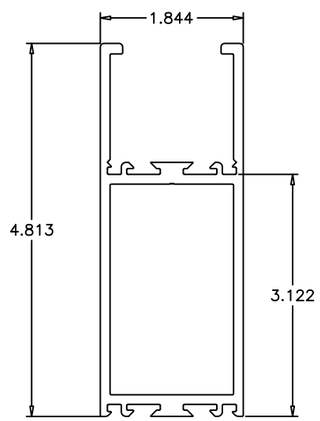

CGI–500A
TOP RAIL

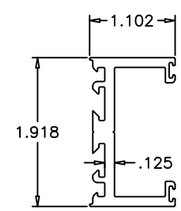

CGI–503
NARROW SIDELITE STILE

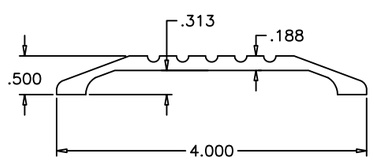

CGI–540
COM. SADDLE/ADA THRESHOLD

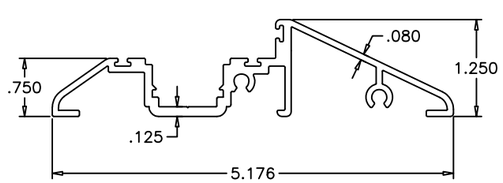

CGI–539
RES. SADDLE THRESHOLDS

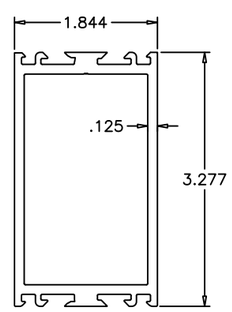

CGI–514
HORIZONTAL MUNTIN

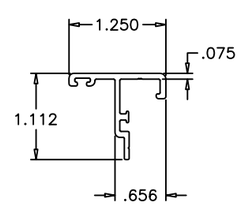

CGI–505
ASTRAGAL

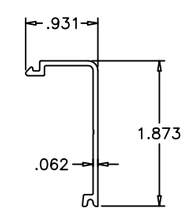

CGI–511
JAMB COVER

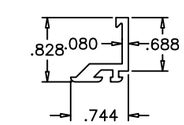

CGI–515

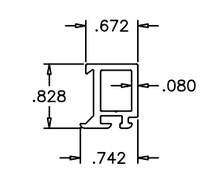

CGI–519

GLAZING STOP OPTIONS

PRODUCT REVISED
as complying with the Florida Building Code
NOA–No. 22-0822.05
Expiration Date 10/25/2027
By Ishwar I. Chanda
Miami–Dade Product Control

Revision:

WINDOOR® INCORPORATED
104 TRIPLE DIAMOND BLVD.
N. VENICE, FL 34275
(407) 481-8400

PREPARED BY A. LYNN MILLER
1070 TECHNOLOGY DRIVE
N. VENICE, FL 34275
(941) 480-1600
REGISTRATION #29296

Series	Scale	Sheet	DWG No.	Rev.
FD450 INSWING	NTS	5 OF 14	450FD4B-NOA	B

Desc:	Drawn By	Date
EXTRUSIONS	J ROSOWSKI	06/12/2020

Title: 450 ALUM. FRENCH DOOR - OPAQUE & IS (LM)

ANTHONY LYNN MILLER
LICENSE
No. 58705
A. Lynn Miller
08/10/22
STATE OF FLORIDA
PROFESSIONAL ENGINEER

A. LYNN MILLER, P.E.
P.E.# 58705

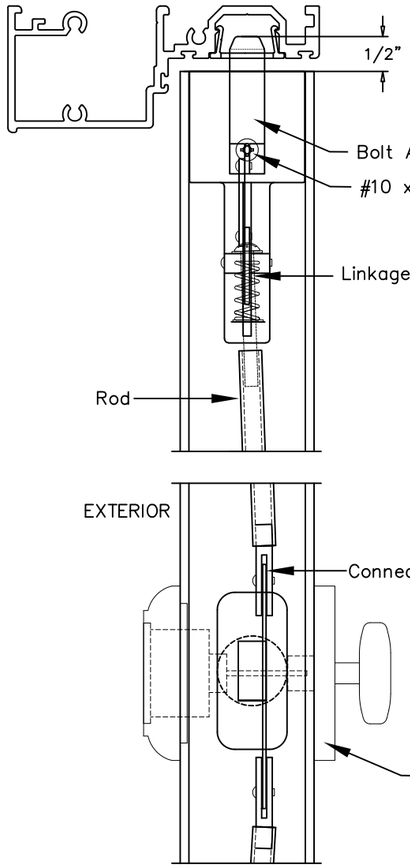

CGI CUSTOM
3–POINT LOCK
TOP SECTION SHOWN
(BOTTOM SIMILAR)

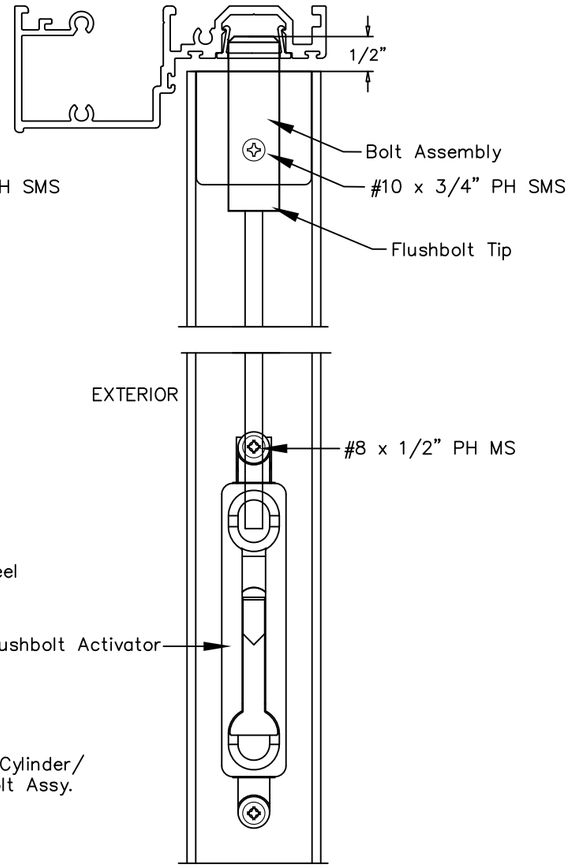

12 FLUSHBOLTS
(INACTIVE PANEL)
TOP SECTION SHOWN
(BOTTOM SIMILAR)

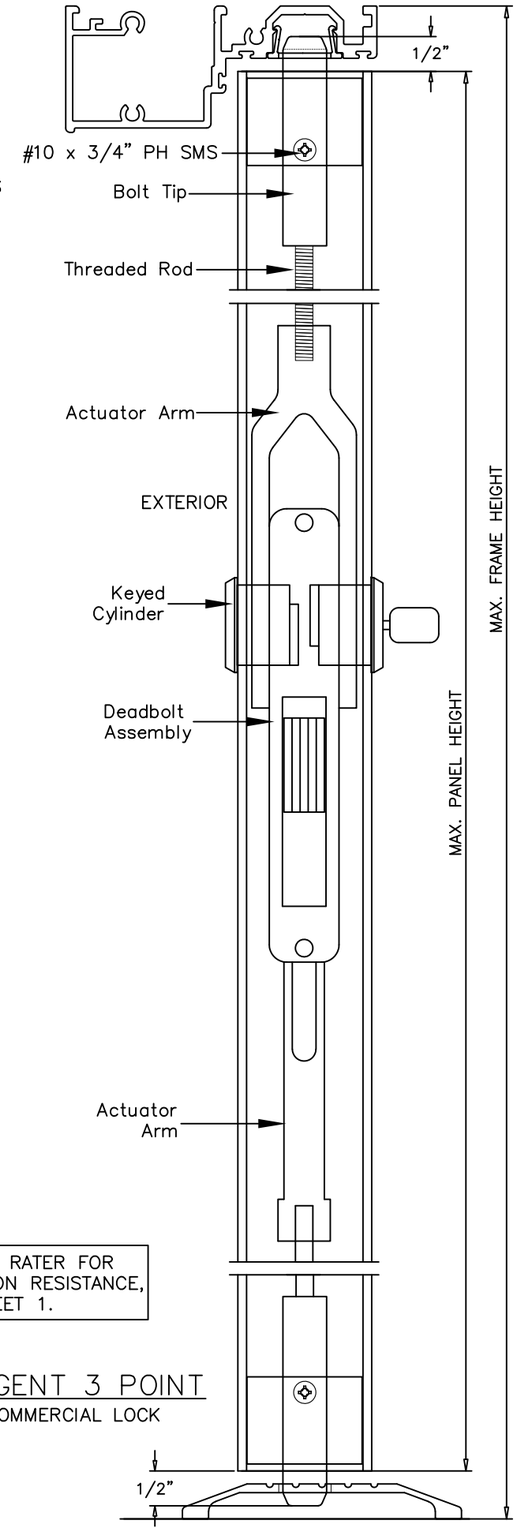

THIS SILL IS NOT RATER FOR WATER INFILTRATION RESISTANCE, SEE NOTE 2, SHEET 1.

REGENT 3 POINT
COMMERCIAL LOCK

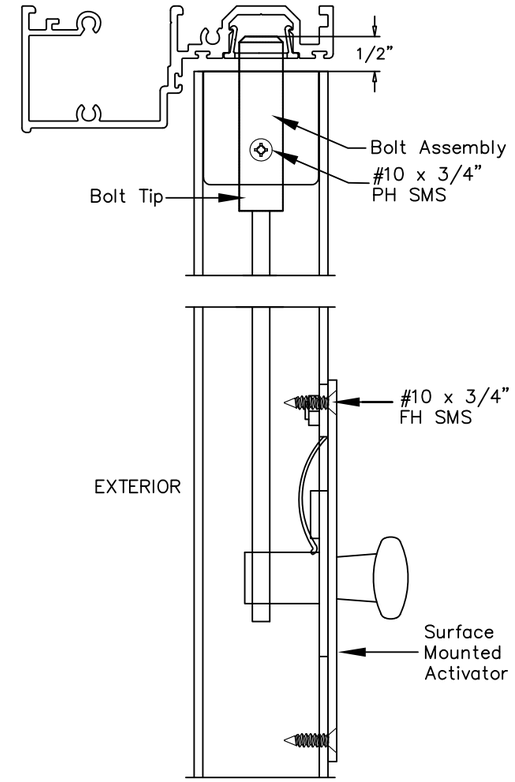

SURFACE MOUNT SLIDE
BOLT WITH BALDWIN
DEAD BOLT
TOP SECTION SHOWN
(BOTTOM SIMILAR)

PRODUCT REVISED
as complying with the Florida Building Code
NOA–No. 22-0822.05
Expiration Date 10/25/2027
By Ishwar I. Chanda
Miami–Dade Product Control

Revision:

PREPARED BY A. LYNN MILLER
1070 TECHNOLOGY DRIVE
N. VENICE, FL 34275
(941) 480-1600
REGISTRATION #29296

WINDOOR® INCORPORATED
104 TRIPLE DIAMOND BLVD.
N. VENICE, FL 34275
(407) 481-8400

Title:	450 ALUM. FRENCH DOOR - OPAQUE & IS (LM)	Date	06/12/2020	Rev.	B
Desc:	HARDWARE DETAILS 1	Drawn By	J ROSOWSKI	DWG No.	450FD4B-NOA
Series	FD450 INSWING	Scale	NTS	Sheet	6 OF 14

ANTHONY LYNN MILLER
LICENSE
No. 58705
08/10/22
STATE OF FLORIDA
PROFESSIONAL ENGINEER

A. LYNN MILLER, P.E.
P.E.# 58705

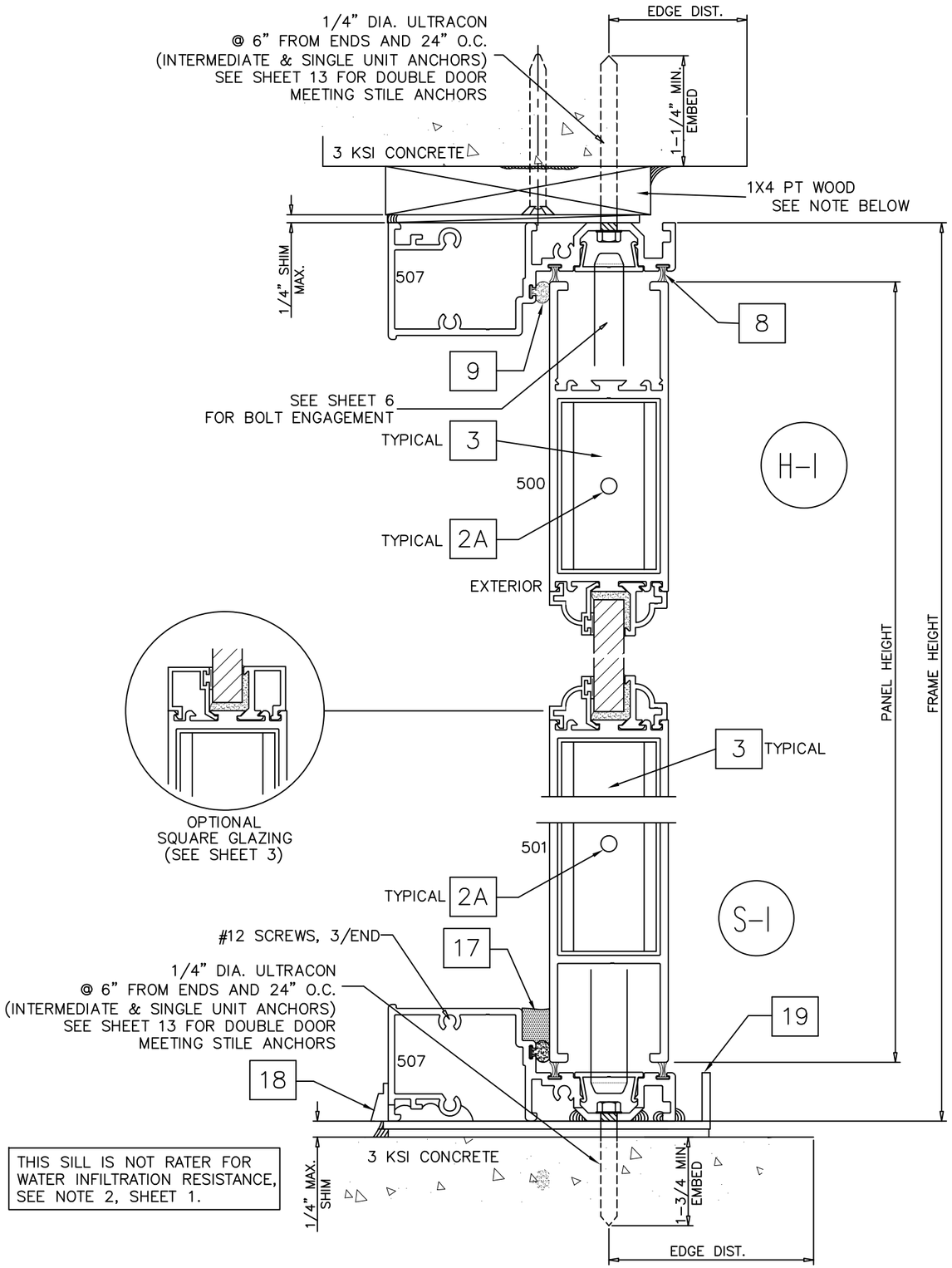

THIS SILL IS NOT RATER FOR WATER INFILTRATION RESISTANCE, SEE NOTE 2, SHEET 1.

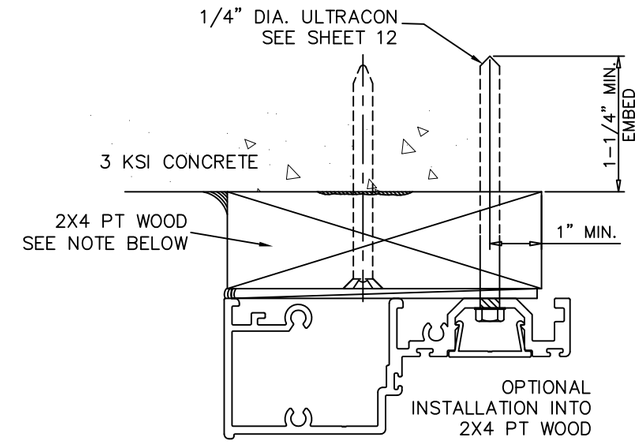

WOOD INSTALLATION DETAIL:

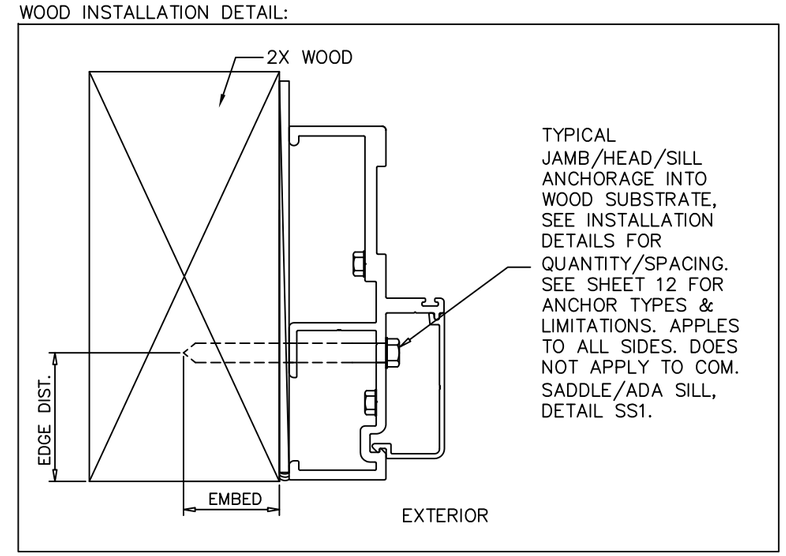

OPTIONAL INSTALLATION
DIRECTLY INTO 2X WOOD

NOTES:

1) ALL JAMB ANCHOR CONDITIONS SHOWN ON SHEETS 7, 9 AND 10 MAY BE DIRECTLY TO MASONRY WITH 1/4" MAX. SHIM SPACE WITHOUT VARIATION IN CAPACITY.

2) 1X OR 2X WOOD BUCKS NOT BY CGI MUST BE PROPERLY SECURED AND MUST SUSTAIN LOADS IMPOSED BY GLAZING SYSTEM.

PRODUCT REVISED
as complying with the Florida Building Code
NOA-No. 22-0822.05
Expiration Date 10/25/2027
By Ishwar I. Chanda
Miami-Dade Product Control

Revision:

PREPARED BY A. LYNN MILLER
1070 TECHNOLOGY DRIVE
N. VENICE, FL 34275
(941) 480-1600
REGISTRATION #29296

WINDOOR® INCORPORATED
104 TRIPLE DIAMOND BLVD.
N. VENICE, FL 34275
(407) 481-8400

Title	450 ALUM. FRENCH DOOR - OPAQUE & IS (LM)
Desc.	INSTALLATION DETAILS 1
Series	FD450 INSWING
Scale	NTS
Sheet	7 OF 14
DWG No.	450FD4B-NOA
Rev.	B
Drawn By	J ROSOWSKI
Date	06/12/2020

ANTHONY LYNN MILLER
LICENSE
No. 58705
08/10/22
STATE OF FLORIDA
PROFESSIONAL ENGINEER

A. LYNN MILLER, P.E.
P.E.# 58705

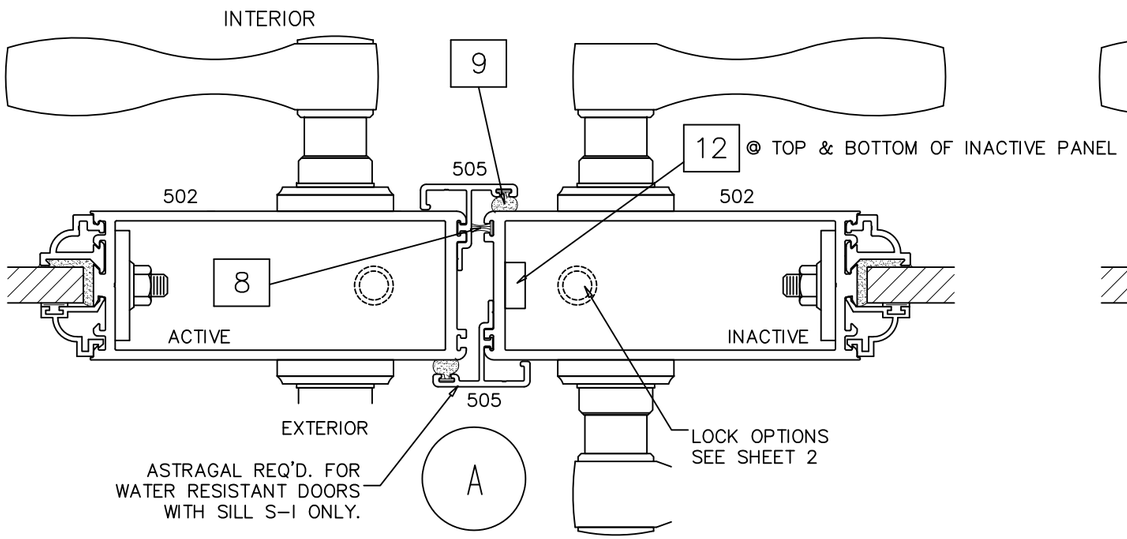

LOCK STILES WITH WATER RESISTANCE

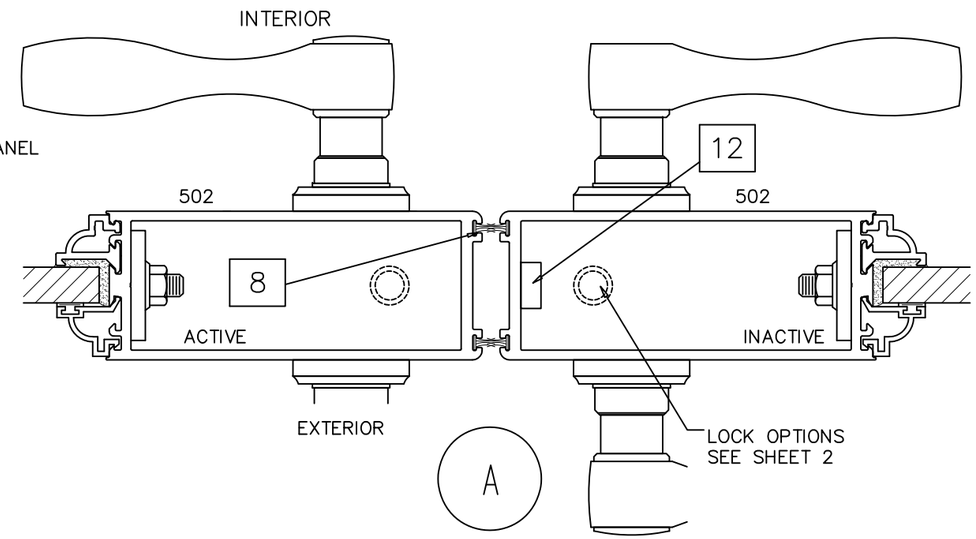

LOCK STILES WITHOUT WATER RESISTANCE

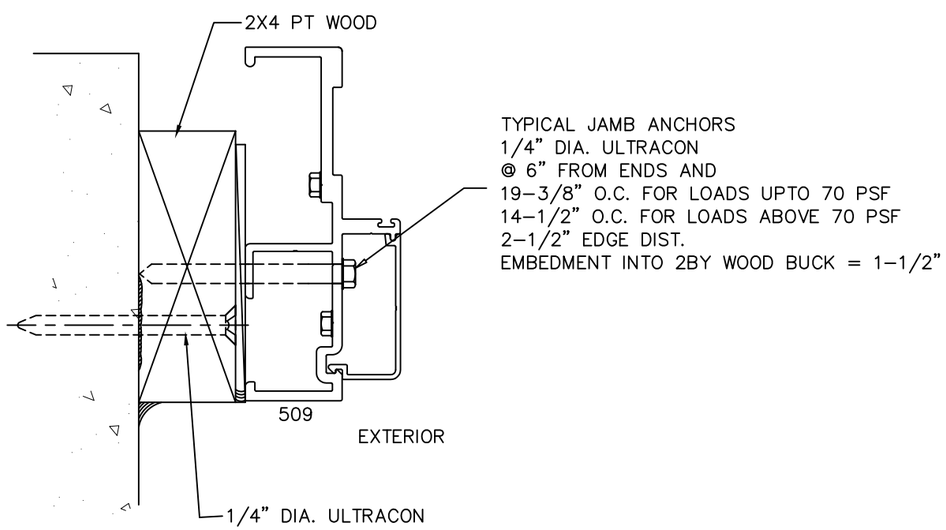

OPTIONAL INSTALLATION
INTO 2X4 PT WOOD
SEE NOTE BELOW

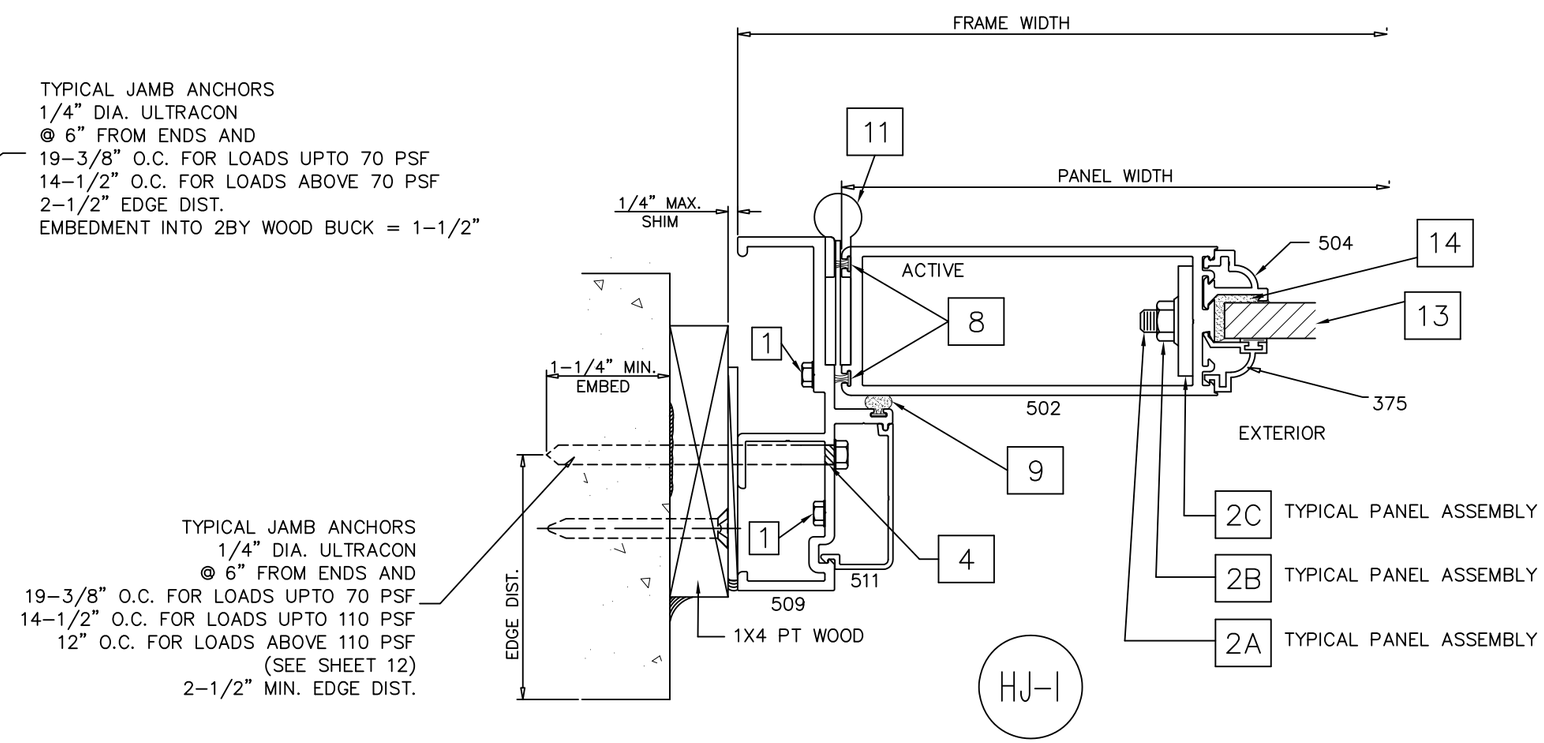

NOTE:
1X OR 2X WOOD BUCKS NOT BY WINDOOR MUST BE PROPERLY SECURED AND MUST SUSTAIN LOADS IMPOSED BY GLAZING SYSTEM.

PRODUCT REVISED
as complying with the Florida Building Code
NOA-No. 22-0822.05
Expiration Date 10/25/2027
By Ishwar I. Chanda
Miami-Dade Product Control

Revision:

PREPARED BY A. LYNN MILLER
1070 TECHNOLOGY DRIVE
N. VENICE, FL 34275
(941) 480-1600
REGISTRATION #29296

WINDOOR® INCORPORATED
104 TRIPLE DIAMOND BLVD.
N. VENICE, FL 34275
(407) 481-8400

Series	Title	Scale	Sheet	DWG No.	Drawn By	Date	Rev.
FD450 INSWING	450 ALUM. FRENCH DOOR - OPAQUE & IS (LM) / INSTALLATION DETAILS 2	NTS	8 OF 14	450FD4B-NOA	J ROSOWSKI	06/12/2020	B

ANTHONY LYNN MILLER
LICENSE
No. 58705
A. Lynn Miller
08/10/22
STATE OF FLORIDA
PROFESSIONAL ENGINEER

A. LYNN MILLER, P.E.
P.E.# 58705

MULLION #1

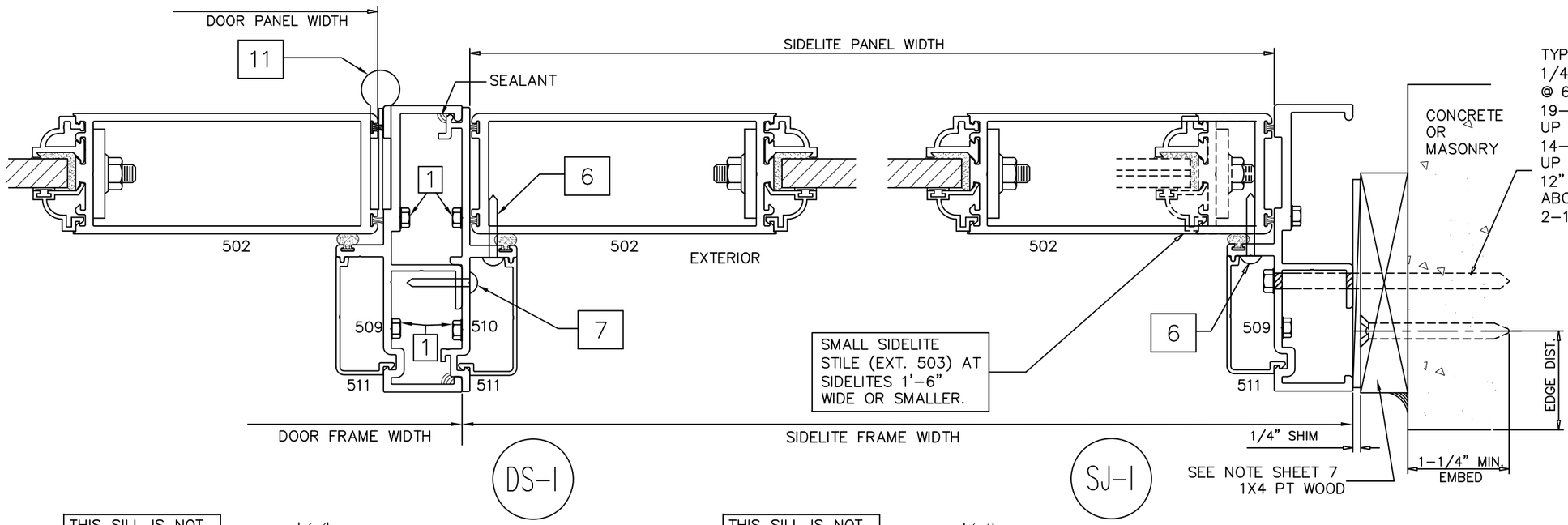

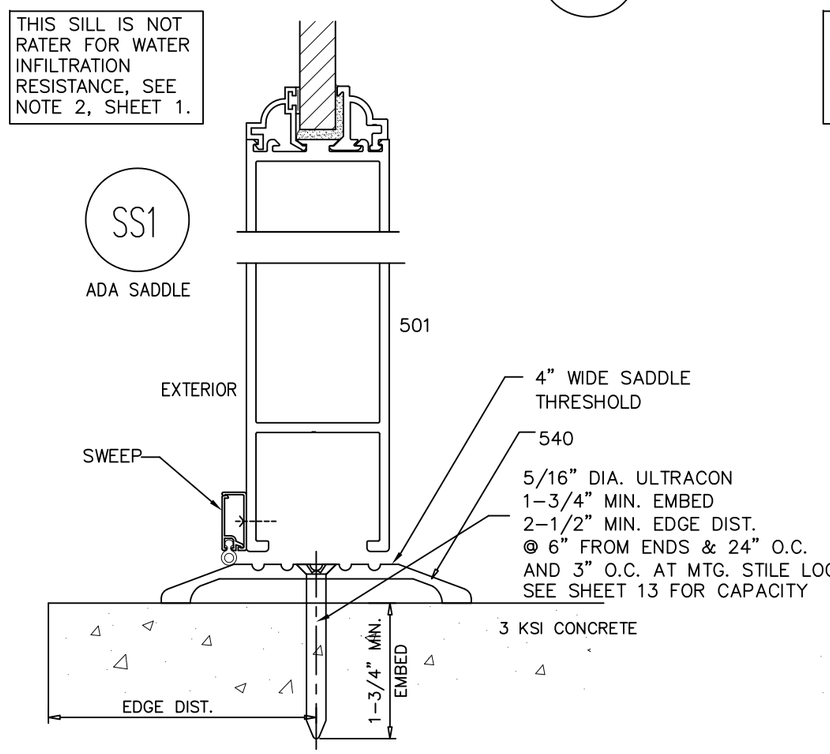

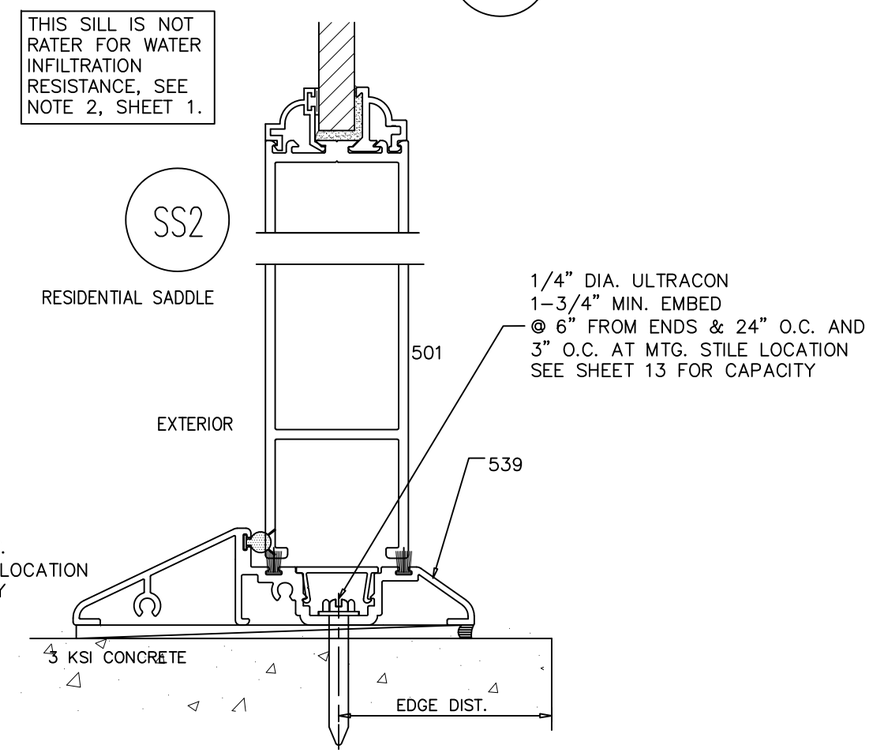

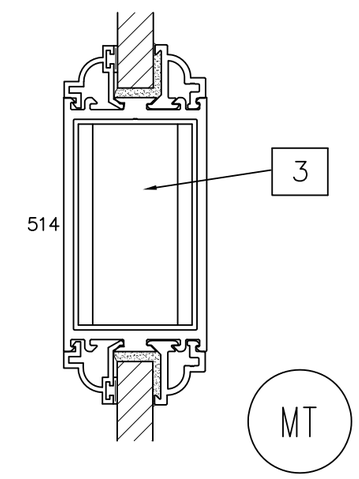

REFER TO SHEET 4 OF 14 FOR TYPICAL BILL OF MATERIALS

PRODUCT REVISED
as complying with the Florida Building Code
NOA-No. 22-0822.05
Expiration Date 10/25/2027
By Ishwar I. Chanda
Miami-Dade Product Control

Revision:

PREPARED BY A. LYNN MILLER
1070 TECHNOLOGY DRIVE
N. VENICE, FL 34275
(941) 480-1600
REGISTRATION #29296

WINDOOR® INCORPORATED
104 TRIPLE DIAMOND BLVD.
N. VENICE, FL 34275
(407) 481-8400

Series	Title	Desc.	Scale	Sheet	DWG No.	Rev.
FD450 INSWING	450 ALUM. FRENCH DOOR - OPAQUE & IS (LM)	INSTALLATION DETAILS 3	NTS	9 OF 14	450FD4B-NOA	B

Drawn By	Date
J ROSOWSKI	06/12/2020

ANTHONY LYNN MILLER
LICENSE
No. 58705
A. Lynn Miller
08/10/22
STATE OF FLORIDA
PROFESSIONAL ENGINEER

A. LYNN MILLER, P.E.
P.E.# 58705

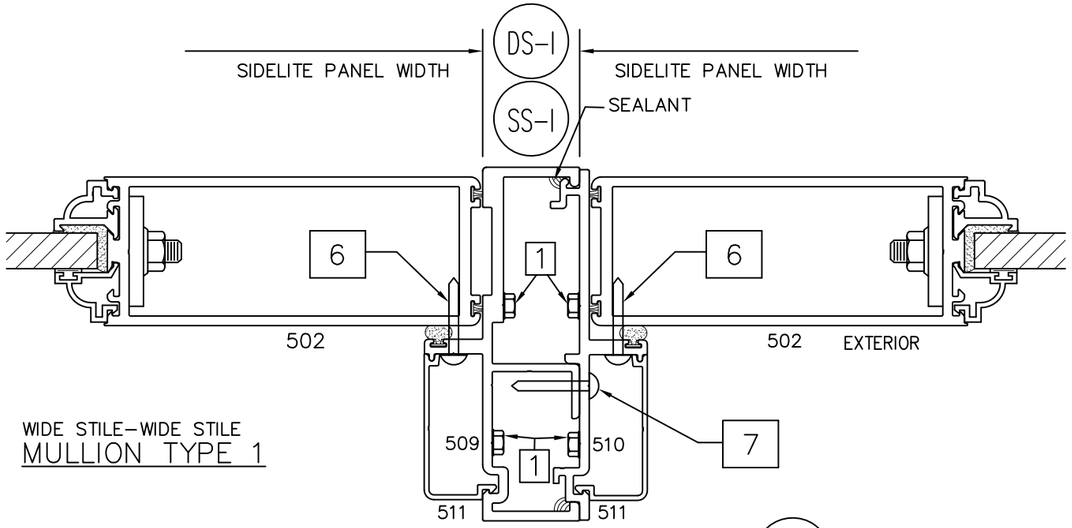

WIDE STILE–WIDE STILE
MULLION TYPE 1

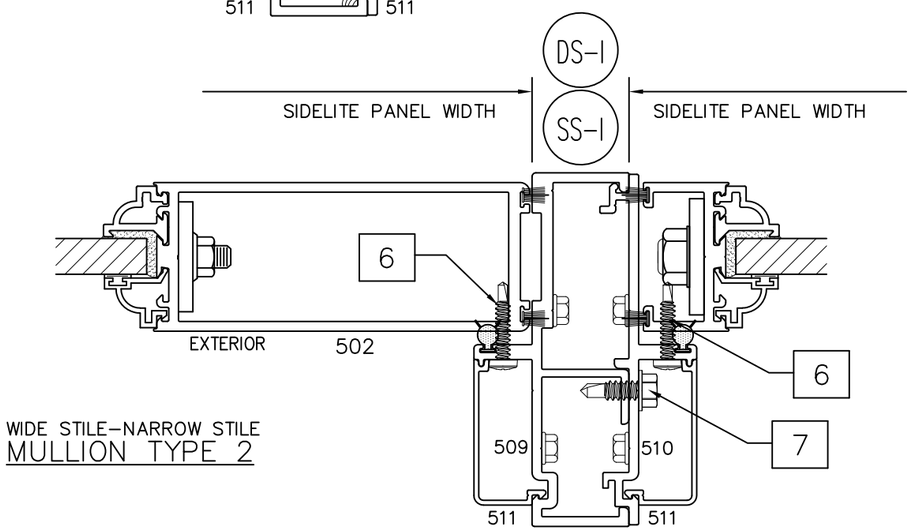

WIDE STILE–NARROW STILE
MULLION TYPE 2

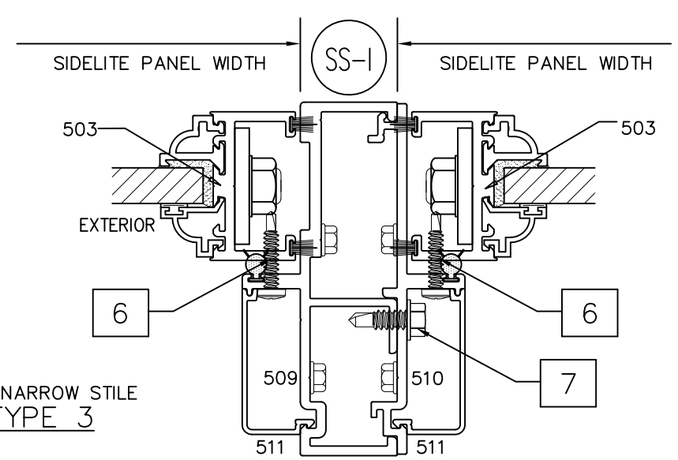

NARROW STILE–NARROW STILE
MULLION TYPE 3

NOTES:
1) LOWER DESIGN LOAD FROM PANEL PERFORMANCE CHART ON SHEET 11 OR MULLION PERFORMANCE CHART ABOVE SHALL CONTROL.

2) REFER TO SHEET 4 OF 14 FOR TYPICAL BILL OF MATERIALS.

MULLION PERFORMANCE CHART
DESIGN LOAD CAPACITY – PSF

NOMINAL DIMS.		MULL TYPE 1		MULL TYPE 2		MULL TYPE 3	
WIDTH (W)	FRAME HEIGHT	EXT.(+)	INT.(–)	EXT.(+)	INT.(–)	EXT.(+)	INT.(–)
1/6	82–3/4"	100.0	110.0	100.0	110.0	100.0	110.0
2/0		100.0	110.0	100.0	110.0	100.0	110.0
2/6		100.0	110.0	100.0	110.0	–	–
3/0		100.0	110.0	100.0	110.0	–	–
3/6		94.2	94.2	70.0	70.0	–	–
1/6	84–3/4"	100.0	110.0	100.0	110.0	100.0	110.0
2/0		100.0	110.0	100.0	110.0	100.0	110.0
2/6		100.0	110.0	100.0	110.0	–	–
3/0		100.0	110.0	100.0	110.0	–	–
3/6		94.2	94.2	–	–	–	–
1/6	90–3/4"	100.0	110.0	100.0	110.0	100.0	110.0
2/0		100.0	110.0	100.0	110.0	70.0	70.0
2/6		100.0	110.0	100.0	110.0	–	–
3/0		100.0	110.0	70.0	70.0	–	–
3/6		94.2	94.2	–	–	–	–
1/6	96–3/4"	100.0	110.0	100.0	110.0	100.0	110.0
2/0		100.0	110.0	100.0	110.0	70.0	70.0
2/6		100.0	110.0	100.0	110.0	–	–
3/0		100.0	110.0	–	–	–	–
3/6		59.9	59.9	–	–	–	–
1/6	102–3/4"	100.0	110.0	100.0	110.0	100.0	110.0
2/0		100.0	110.0	100.0	110.0	–	–
2/6		100.0	110.0	100.0	100.4	–	–
3/0		98.9	98.9	–	–	–	–
3/6		59.9	59.9	–	–	–	–
1/6	108–3/4"	100.0	110.0	100.0	110.0	100.0	110.0
2/0		100.0	110.0	100.0	104.1	–	–
2/6		98.1	98.1	70.0	70.0	–	–
3/0		82.9	82.9	–	–	–	–
1/6	114–3/4"	70.0	70.0	70.0	70.0	100.0	110.0
2/0		70.0	70.0	70.0	70.0	–	–
2/6		70.0	70.0	–	–	–	–
3/0		70.0	70.0	–	–	–	–
1/6	120–3/4"	70.0	70.0	70.0	70.0	70.0	70.0
2/0		70.0	70.0	70.0	70.0	–	–
2/6		70.0	70.0	–	–	–	–
3/0		59.9	59.9	–	–	–	–

$$\text{WIDTH (W)} = \frac{\text{DOOR PANEL + FIXED PANEL}}{2} + 1.250$$

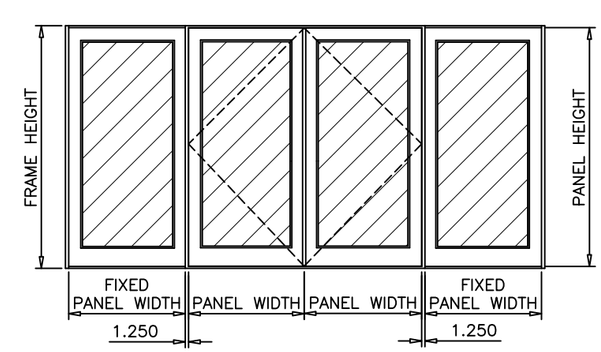

PRODUCT REVISED
as complying with the Florida Building Code
NOA–No. 22-0822.05
Expiration Date 10/25/2027
By Ishwar I. Chanda
Miami–Dade Product Control

Revision:

PREPARED BY A. LYNN MILLER
1070 TECHNOLOGY DRIVE
N. VENICE, FL 34275
(941) 480-1600
REGISTRATION #29296

WINDOOR® INCORPORATED
104 TRIPLE DIAMOND BLVD.
N. VENICE, FL 34275
(407) 481-8400

Title	Desc.	Series	Date	Drawn By	DWG No.	Rev.
450 ALUM. FRENCH DOOR - OPAQUE & IS (LM)	MULLION X-SECTION AND DPS	FD450 INSWING	06/12/2020	J ROSOWSKI	450FD4B-NOA	B

Scale: NTS
Sheet: 10 OF 14

ANTHONY LYNN MILLER
LICENSE
No. 58705
A. Lynn Miller
08/10/22
STATE OF FLORIDA
PROFESSIONAL ENGINEER

A. LYNN MILLER, P.E.
P.E.# 58705

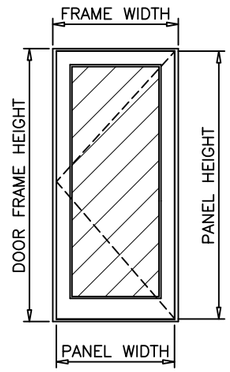

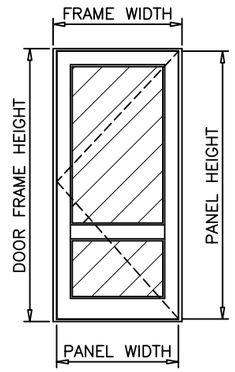

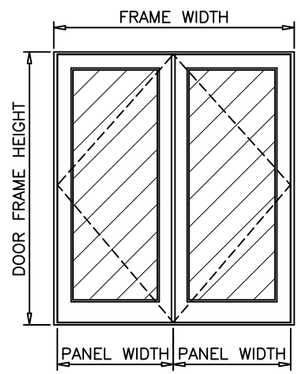

PANEL PERFORMANCE CHART FOR SINGLE & DOUBLE DOORS & SINGLE SIDELITES
(NARROW STILE SIDELITES LIMITED TO 18" OR LESS)
DESIGN LOAD CAPACITY – PSF

NOMINAL DIMS.			7/16" COMPOSITE PANELS 1" COMPOSITE PANELS	
FRAME WIDTH (X)	FRAME WIDTH (XX)	FRAME HEIGHT	EXT. (+)	INT. (-)
26-9/16"	50-1/2"	82-3/4"	100.0	110.0
32-9/16"	62-1/2"		100.0	110.0
38-9/16"	74-1/2"		100.0	110.0
44-9/16"	86-1/2"		94.2	94.2
26-9/16"	50-1/2"	84-3/4"	100.0	110.0
32-9/16"	62-1/2"		100.0	110.0
38-9/16"	74-1/2"		100.0	110.0
44-9/16"	86-1/2"		94.2	94.2
26-9/16"	50-1/2"	90-3/4"	100.0	110.0
32-9/16"	62-1/2"		100.0	110.0
38-9/16"	74-1/2"		100.0	110.0
44-9/16"	86-1/2"		94.2	94.2
26-9/16"	50-1/2"	96-3/4"	100.0	110.0
32-9/16"	62-1/2"		100.0	110.0
38-9/16"	74-1/2"		100.0	110.0
44-9/16"	86-1/2"		59.9	59.9
26-9/16"	50-1/2"	102-3/4"	100.0	110.0
32-9/16"	62-1/2"		100.0	110.0
38-9/16"	74-1/2"		100.0	110.0
44-9/16"	86-1/2"		59.9	59.9
26-9/16"	50-1/2"	108-3/4"	100.0	110.0
32-9/16"	62-1/2"		100.0	110.0
38-9/16"	74-1/2"		100.0	110.0
26-9/16"	50-1/2"	114-3/4"	70.0	70.0
32-9/16"	62-1/2"		70.0	70.0
38-9/16"	74-1/2"		70.0	70.0
26-9/16"	50-1/2"	120-3/4"	70.0	70.0
32-9/16"	62-1/2"		70.0	70.0
38-9/16"	74-1/2"		70.0	70.0

NOTES:
1) FOR SINGLE OR DOUBLE LEAF DOORS AND SINGLE SIDELITES CAPACITY SEE CHART ON THIS SHEET.

2) SEE BELOW FOR THRESHOLD TYPES.

3) SEE SHEET 2 FOR LOCK CAPACITIES FOR SINGLE AND DOUBLE DOORS.

4) SEE SHEET 10 FOR MULLION TYPES AND DESIGN LOAD CAPACITY.

5) SEE CHART ON SHEET 12 FOR MULLION ANCHORS CAPACITY.

6) SEE CHART ON SHEET 13 FOR MTG. STILE ANCHORS AT DOUBLE DOOR.

7) LOWEST VALUE FROM THESE CHARTS WILL APPLY TO ENTIRE ASSEMBLY.

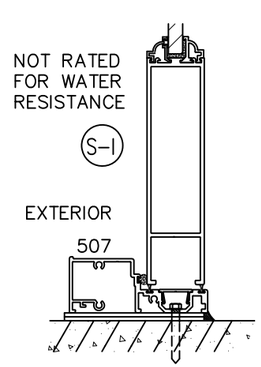

INSWING

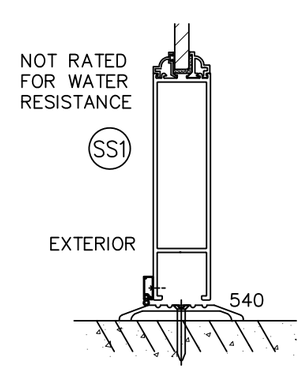

INSWING
(COM. SADDLE)

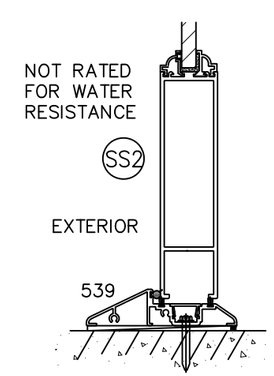

INSWING
(RES. SADDLE)

PRODUCT REVISED
as complying with the Florida Building Code
NOA-No. 22-0822.05
Expiration Date 10/25/2027
By Ishwar I. Chanda
Miami-Dade Product Control

Revision:

PREPARED BY A. LYNN MILLER
1070 TECHNOLOGY DRIVE
N. VENICE, FL 34275
(941) 480-1600
REGISTRATION #29296

WINDOOR® INCORPORATED
104 TRIPLE DIAMOND BLVD.
N. VENICE, FL 34275
(407) 481-8400

Series	FD450 INSWING	Scale	NTS
Sheet	11 OF 14	DWG No.	450FD4B-NOA
Rev.	B	Drawn By	J ROSOWSKI
Date	06/12/2020	Desc.	PANEL DP
Title	450 ALUM. FRENCH DOOR - OPAQUE & IS (LM)		

ANTHONY LYNN MILLER
LICENSE
No. 58705
A. Lynn Miller
08/10/22
STATE OF FLORIDA
PROFESSIONAL ENGINEER

A. LYNN MILLER, P.E.
P.E.# 58705

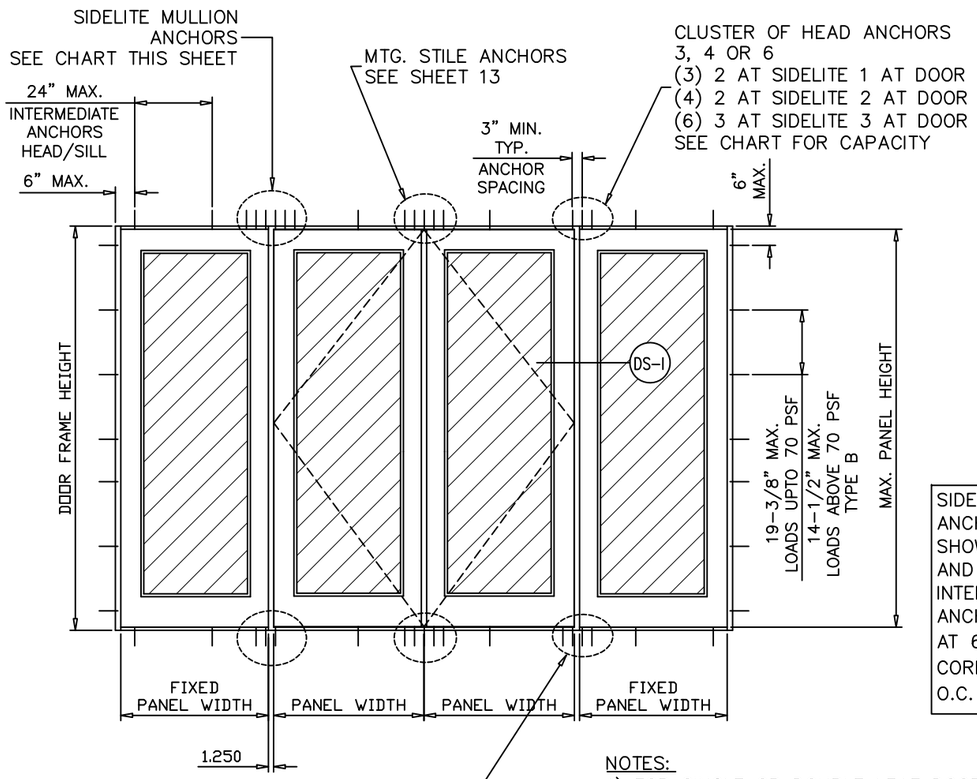

SIDELITE MULLION ANCHORS AS SHOWN IN DETAILS AND CHARTS. INTERMEDIATE ANCHORS TO BE AT 6" FROM CORNERS AND 24" O.C. AT HEAD/SILL.

CLUSTER OF SILL ANCHORS
3 OR 4
(3) 2 AT SIDELITE 1 AT DOOR
(4) 2 AT SIDELITE 2 AT DOOR
SEE CHART FOR CAPACITY

NOTES:
1) FOR SINGLE OR DOUBLE LEAF DOORS AND SINGLE SIDELITES CAPACITY SEE CHART ON SHEET 11.
2) SEE SHEET 2 FOR LOCK CAPACITIES FOR SINGLE AND DOUBLE DOORS.
3) SEE BELOW FOR THRESHOLD TYPES.
4) SEE SHEET 10 FOR MULLION TYPES AND DESIGN LOAD CAPACITY.
5) SEE CHART ON THIS SHEET FOR MULLION ANCHORS CAPACITY.
6) SEE CHART ON SHEET 13 FOR MTG. STILE ANCHORS AT DOUBLE DOOR.
7) LOWEST VALUE FROM THESE CHARTS WILL APPLY TO ENTIRE ASSEMBLY.

MULLION ANCHORS AT SIDELITES

NOMINAL DIMS.		DESIGN LOAD CAPACTY-PSF						
		TYPE 'B' OR 'B+' AT HEAD			TYPE 'C' AT HEAD TYPE 'C' AT S-I & SS2 SILL		TYPE 'C' AT HEAD TYPE 'D1' AT SS1 SILL OR TYPE 'D2' AT S-I & SS2 SILL	
WIDTH (W)	FRAME HEIGHT	CLUSTER OF 3 ANCHORS	CLUSTER OF 4 ANCHORS	CLUSTER OF 6 ANCHORS	CLUSTER OF 3 ANCHORS	CLUSTER OF 4 ANCHORS	CLUSTER OF 3 ANCHORS	CLUSTER OF 4 ANCHORS
2/0	82-3/4"	106.7	110.0	110.0	110.0	110.0	110.0	110.0
2/6		86.2	110.0	110.0	110.0	110.0	110.0	110.0
3/0		72.3	96.4	110.0	109.3	110.0	101.0	110.0
3/6		62.3	83.0	110.0	94.2	110.0	87.0	110.0
2/0	84-3/4"	104.2	110.0	110.0	110.0	110.0	110.0	110.0
2/6		84.2	110.0	110.0	110.0	110.0	110.0	110.0
3/0		70.6	94.1	110.0	106.7	110.0	98.7	110.0
3/6		60.8	81.1	110.0	91.9	110.0	85.0	108.7
2/0	90-3/4"	97.3	110.0	110.0	110.0	110.0	110.0	110.0
2/6		78.6	104.8	110.0	110.0	110.0	109.8	110.0
3/0		65.9	87.9	110.0	99.7	110.0	92.1	110.0
3/6		56.8	75.7	110.0	85.9	110.0	79.4	101.5
2/0	96-3/4"	91.2	110.0	110.0	110.0	110.0	110.0	110.0
2/6		73.7	98.3	110.0	110.0	110.0	103.0	110.0
3/0		61.9	82.5	110.0	93.5	110.0	86.4	110.0
3/6		53.3	71.0	106.5	80.5	107.4	74.4	95.2
2/0	102-3/4"	85.9	110.0	110.0	110.0	110.0	110.0	110.0
2/6		69.4	92.6	110.0	104.9	110.0	97.0	110.0
3/0		58.2	77.7	110.0	88.0	110.0	81.4	104.1
3/6		50.2	66.9	100.3	75.8	101.1	70.1	89.6
2/0	108-3/4"	81.2	108.2	110.0	110.0	110.0	110.0	110.0
2/6		65.6	87.5	110.0	99.2	110.0	91.7	110.0
3/0		55.0	73.4	110.0	83.2	110.0	76.9	98.3
2/0	114-3/4"	76.9	102.6	110.0	110.0	110.0	107.5	110.0
2/6		62.2	82.9	110.0	94.0	110.0	86.9	110.0
3/0		52.2	69.5	104.3	78.8	105.1	72.9	93.2
2/0	120-3/4"	73.1	97.5	110.0	110.0	110.0	102.2	110.0
2/6		59.1	78.8	110.0	89.3	110.0	82.5	105.6
3/0		49.6	66.1	99.1	74.9	99.9	69.2	88.6

$$\text{WIDTH (W)} = \frac{\text{DOOR PANEL + FIXED PANEL}}{2} + 1.250$$

ANCHORS:

TYPE 'B'– 1/4" DIA. ULTRACON BY 'ELCO' (Fu=177 KSI, Fy=155 KSI)
INTO 2BY WOOD BUCKS OR WOOD STRUCTURES
1-1/2" MIN. PENETRATION INTO WOOD
THRU 1BY WOOD BUCKS INTO CONC./HOLLOW BLOCK
1-1/4" MIN. EMBED INTO CONC./HOLLOW BLOCK
DIRECTLY INTO CONCRETE
1-1/4" MIN. EMBED INTO CONCRETE
EDGE DISTANCES
INTO CONCRETE/HOLLOW BLOCK = 2-1/2" MIN.
INTO WOOD STRUCTURE = 1" MIN.
– AT HEAD OR JAMBS

TYPE 'B+'– 1/4" DIA. ULTRACON+ BY 'DEWALT' (Fu=164 KSI, Fy=148 KSI)
INTO 2BY WOOD BUCKS OR WOOD STRUCTURES
1-1/2" MIN. PENETRATION INTO WOOD
THRU 1BY WOOD BUCKS INTO CONC./HOLLOW BLOCK
1-1/4" MIN. EMBED INTO HOLLOW BLOCK
1-3/4" MIN. EMBED INTO CONCRETE
DIRECTLY INTO CONCRETE
1-3/4" MIN. EMBED INTO CONCRETE
EDGE DISTANCES
INTO CONCRETE/HOLLOW BLOCK = 2-1/2" MIN.
INTO WOOD STRUCTURE = 1" MIN.
– AT HEAD OR JAMBS

TYPE 'C'– 1/4" DIA. ULTRACON BY 'ELCO' (Fu=177 KSI, Fy=155 KSI)
1/4" DIA. ULTRACON+ BY 'DEWALT' (Fu=164 KSI, Fy=148 KSI)
DIRECTLY INTO CONCRETE
1-3/4" MIN. EMBED INTO CONC.
EDGE DISTANCES
INTO CONCRETE = 2-1/2" MIN.
– AT HEAD OR SILL

TYPE 'D1'– 5/16" DIA. ULTRACON BY 'ELCO' (Fu=177 KSI, Fy=155 KSI)
5/16" DIA. ULTRACON BY 'DEWALT' (Fu=177 KSI, Fy=155 KSI)
DIRECTLY INTO CONCRETE
1-3/4" MIN. EMBED INTO CONC.
EDGE DISTANCES
INTO CONCRETE = 3-1/8" MIN.
– AT ADA SILL DETAIL SS1 PART #540

TYPE 'D2'– #14 SMS (GRADE 5 CRS)
INTO WOOD STRUCTURES
WITH 1-3/8" MIN. PENETRATION INTO WOOD
EDGE DISTANCES
INTO WOOD = 1" MIN.
– AT SILL DETAIL S-1, PART #507 OR DETAIL SS2, PART #539

WOOD AT HEAD OR JAMBS SG = 0.55 MIN.
CONCRETE AT HEAD, SILL OR JAMBS f'c = 3000 PSI MIN.
C-90 HOLLOW/FILLED BLOCK AT JAMBS f'm = 2000 PSI MIN.

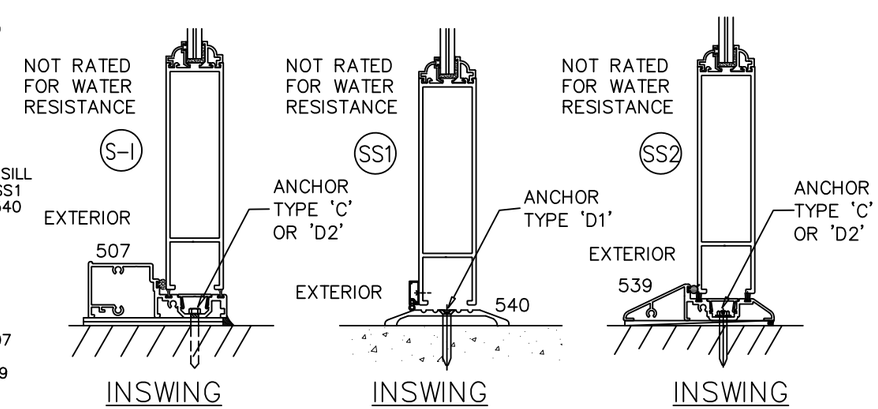

PRODUCT REVISED
as complying with the Florida Building Code
NOA-No. 22-0822.05
Expiration Date 10/25/2027
By Ishwar I. Chanda
Miami-Dade Product Control

Revision:

PREPARED BY A. LYNN MILLER
1070 TECHNOLOGY DRIVE
N. VENICE, FL 34275
(941) 480-1600
REGISTRATION #29296

WINDOOR® INCORPORATED
104 TRIPLE DIAMOND BLVD.
N. VENICE, FL 34275
(407) 481-8400

Series	Desc.	Scale	Sheet	DWG No.	Drawn By	Date	Rev.
FD450 INSWING	ANCHOR DP	NTS	12 OF 14	450FD4B-NOA	J ROSOWSKI	06/12/2020	B

Title: 450 ALUM. FRENCH DOOR - OPAQUE & IS (LM)

ANTHONY LYNN MILLER
LICENSE
No. 58705
A. Lynn Miller
08/10/22
STATE OF FLORIDA
PROFESSIONAL ENGINEER

A. LYNN MILLER, P.E.
P.E.# 58705

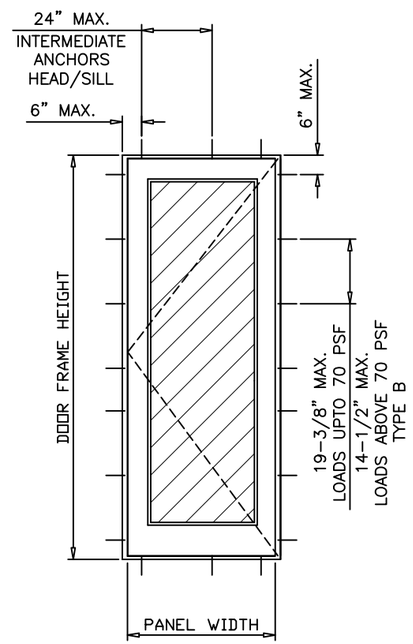

SINGLE DOOR OR SIDELITE

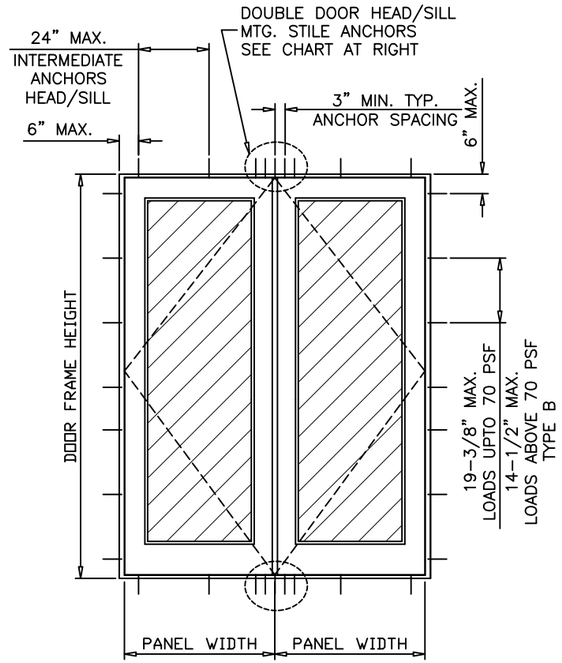

DOUBLE DOOR

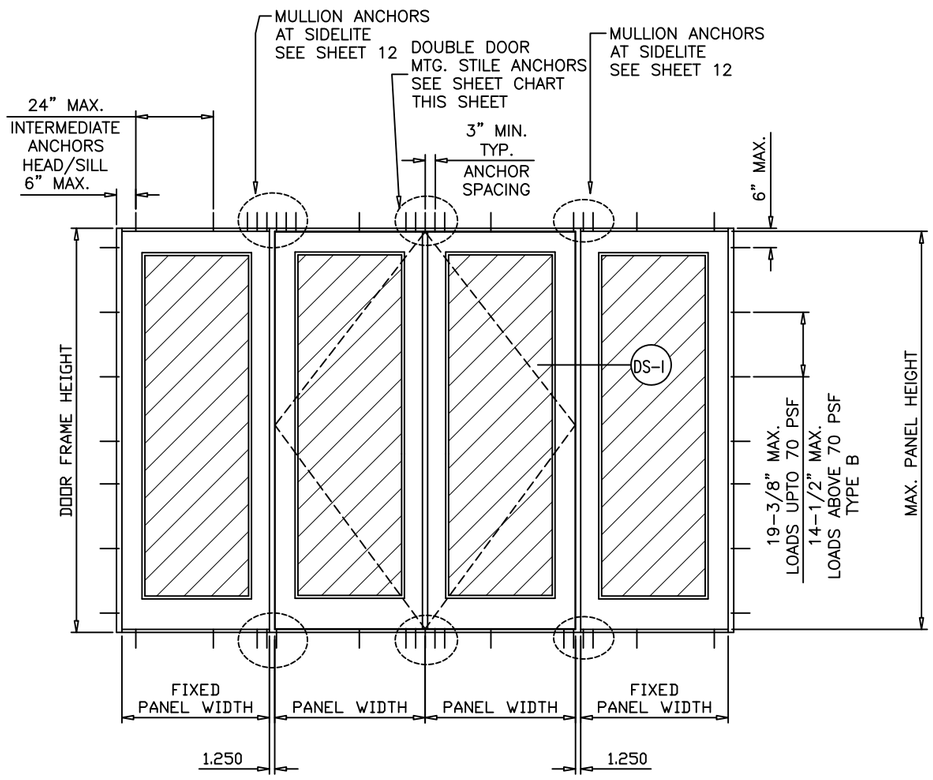

MEETING STILE ANCHORS AS SHOWN IN DETAILS AND CHARTS INTERMEDIATE ANCHORS TO BE AT 6" FROM CORNERS AND 24" O.C. AT HEAD/SILL.

MTG. STILE ANCHORS AT DOUBLE DOORS

NOMINAL DIMS.		DESIGN LOAD CAPACITY-PSF						
		TYPE 'B' OR 'B+' AT HEAD			TYPE 'C' AT HEAD TYPE 'C' AT S-I & SS2 SILL		TYPE 'C' AT HEAD TYPE 'D1' AT SS1 SILL OR TYPE 'D2' AT S-I & SS2 SILL	
FRAME WIDTH (XX)	FRAME HEIGHT	CLUSTER OF 3 ANCHORS	CLUSTER OF 4 ANCHORS	CLUSTER OF 5 ANCHORS	CLUSTER OF 3 ANCHORS	CLUSTER OF 4 ANCHORS	CLUSTER OF 3 ANCHORS	CLUSTER OF 4 ANCHORS
50-1/2"	82-3/4"	106.7	110.0	110.0	110.0	110.0	110.0	110.0
62-1/2"		86.2	110.0	110.0	110.0	110.0	100.7	110.0
74-1/2"		72.3	96.4	110.0	109.3	110.0	84.5	110.0
86-1/2"		62.3	83.0	103.8	94.2	110.0	72.8	97.0
50-1/2"	84-3/4"	104.2	110.0	110.0	110.0	110.0	110.0	110.0
62-1/2"		84.2	110.0	110.0	110.0	110.0	98.4	110.0
74-1/2"		70.6	94.1	110.0	106.7	110.0	82.5	110.0
86-1/2"		60.8	81.1	101.4	91.9	110.0	71.1	94.8
50-1/2"	90-3/4"	97.3	110.0	110.0	110.0	110.0	110.0	110.0
62-1/2"		78.6	104.8	110.0	110.0	110.0	91.9	110.0
74-1/2"		65.9	87.9	109.9	99.7	110.0	77.1	102.7
86-1/2"		56.8	75.7	94.7	85.9	110.0	66.4	88.5
50-1/2"	96-3/4"	91.2	110.0	110.0	110.0	110.0	106.6	110.0
62-1/2"		73.7	98.3	110.0	110.0	110.0	86.2	110.0
74-1/2"		61.9	82.5	103.1	93.5	110.0	72.3	96.4
86-1/2"		53.3	71.0	88.8	80.5	107.4	62.3	83.0
50-1/2"	102-3/4"	85.9	110.0	110.0	110.0	110.0	100.4	110.0
62-1/2"		69.4	92.6	110.0	104.9	110.0	81.1	108.2
74-1/2"		58.2	77.7	97.1	88.0	110.0	68.1	90.7
86-1/2"		50.2	66.9	83.6	75.8	101.1	58.6	78.2
50-1/2"	108-3/4"	81.2	108.2	110.0	110.0	110.0	94.9	110.0
62-1/2"		65.6	87.5	109.3	99.2	110.0	76.7	102.2
74-1/2"		55.0	73.4	91.7	83.2	110.0	64.3	85.7
50-1/2"	114-3/4"	76.9	102.6	110.0	110.0	110.0	89.9	110.0
62-1/2"		62.2	82.9	103.6	94.0	110.0	72.6	96.9
74-1/2"		52.2	69.5	86.9	78.8	105.1	60.9	81.3
50-1/2"	120-3/4"	73.1	97.5	110.0	110.0	110.0	85.4	110.0
62-1/2"		59.1	78.8	98.5	89.3	110.0	69.0	92.0
74-1/2"		49.6	66.1	82.6	74.9	99.9	57.9	77.2

1) SEE SHEET 12 FOR ANCHORS DESCRIPTION AND SILL ANCHOR OPTIONS.
2) FOR SINGLE OR DOUBLE LEAF DOORS, SINGLE SIDELITES AND THRESHOLD CAPACITY SEE CHART ON SHEET 11.
3) SEE SHEET 2 FOR LOCK CAPACITIES FOR SINGLE AND DOUBLE DOORS.
4) SEE SHEET 10 FOR MULLION TYPES AND DESIGN LOAD CAPACITY.
5) SEE CHART ON SHEET 12 FOR MULLION ANCHORS CAPACITY.
6) SEE CHART ON THIS SHEET FOR MTG. STILE ANCHORS AT DOUBLE DOOR.
7) LOWEST VALUE FROM THESE CHARTS WILL APPLY TO ENTIRE ASSEMBLY.

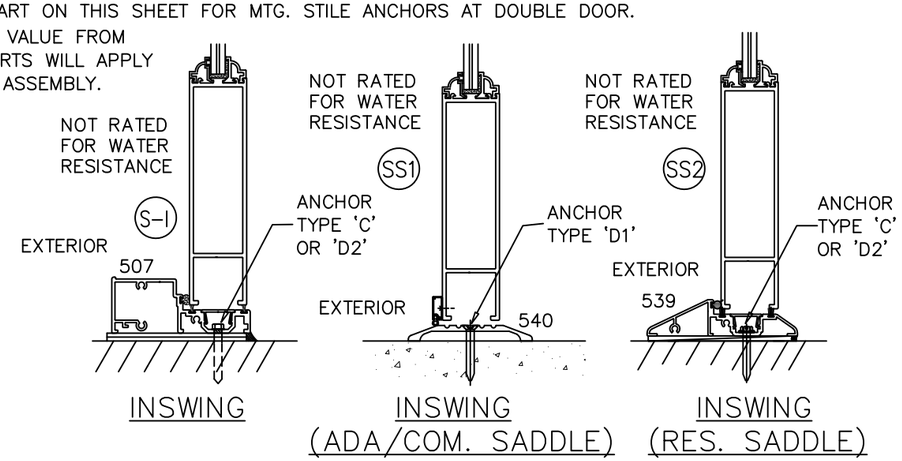

INSWING

INSWING (ADA/COM. SADDLE)

INSWING (RES. SADDLE)

PRODUCT REVISED
as complying with the Florida Building Code
NOA-No. 22-0822.05
Expiration Date 10/25/2027
By Ishwar I. Chanda
Miami-Dade Product Control

Revision:

PREPARED BY A. LYNN MILLER
1070 TECHNOLOGY DRIVE
N. VENICE, FL 34275
(941) 480-1600
REGISTRATION #29296

WINDOOR® INCORPORATED
104 TRIPLE DIAMOND BLVD.
N. VENICE, FL 34275
(407) 481-8400

Title	Desc.	Series	Scale	Sheet	DWG No.	Rev.
450 ALUM. FRENCH DOOR - OPAQUE & IS (LM)	ANCHOR DP	FD450 INSWING	NTS	13 OF 14	450FD4B-NOA	B

Date	Drawn By
06/12/2020	J ROSOWSKI

ANTHONY LYNN MILLER
LICENSE
No. 58705
A. Lynn Miller
08/10/22
STATE OF FLORIDA
PROFESSIONAL ENGINEER

A. LYNN MILLER, P.E.
P.E.# 58705

CORNER DETAILS

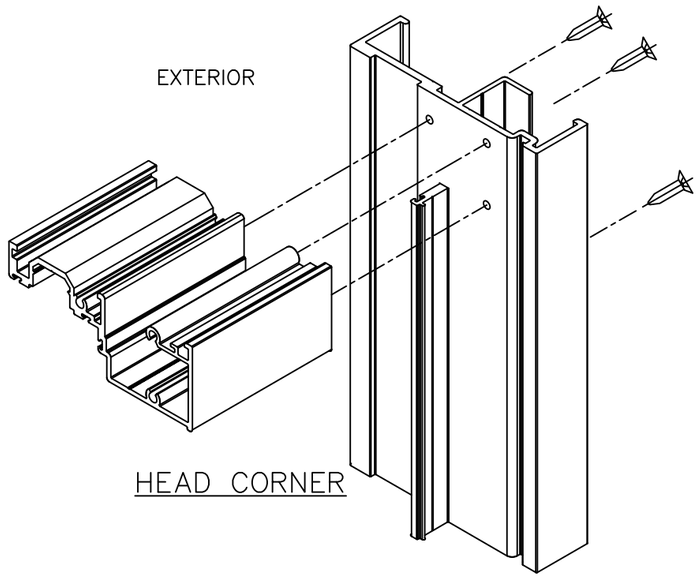

HEAD CORNER

CORNERS TO BE SEALED WITH
LOW MODULUS SILICONE SILPRUF.

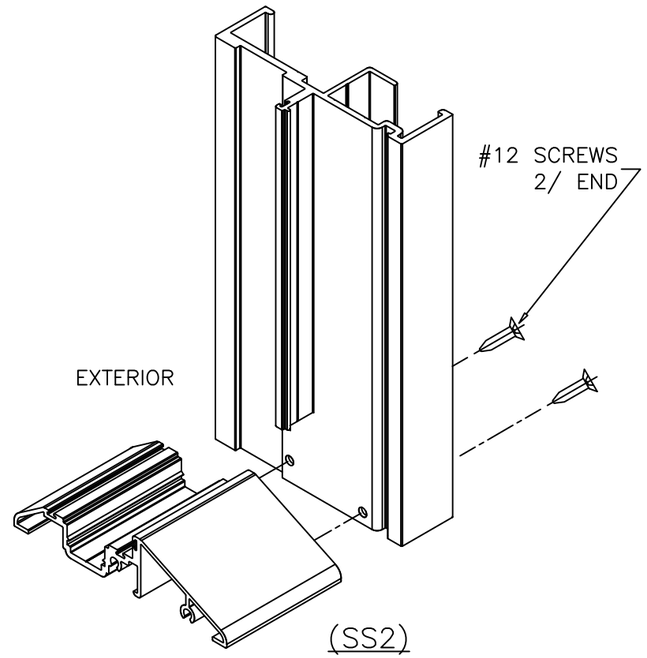

(SS2)
RESIDENTIAL SADDLE SILL

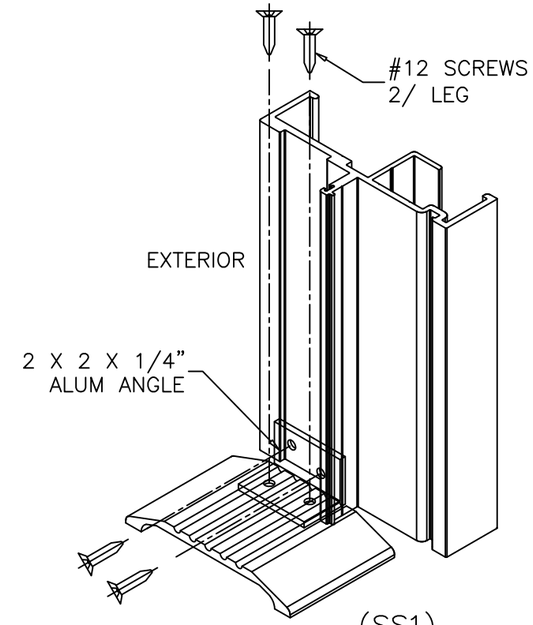

(SS1)
ADA SILL CORNER

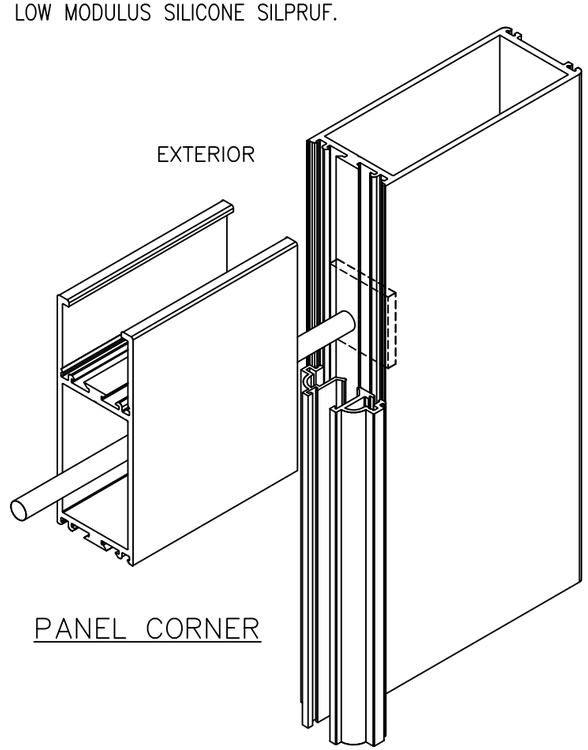

PANEL CORNER

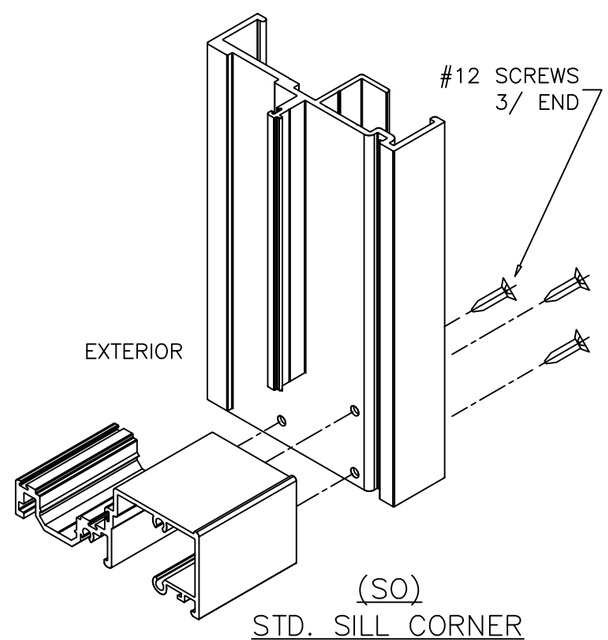

(SO)
STD. SILL CORNER

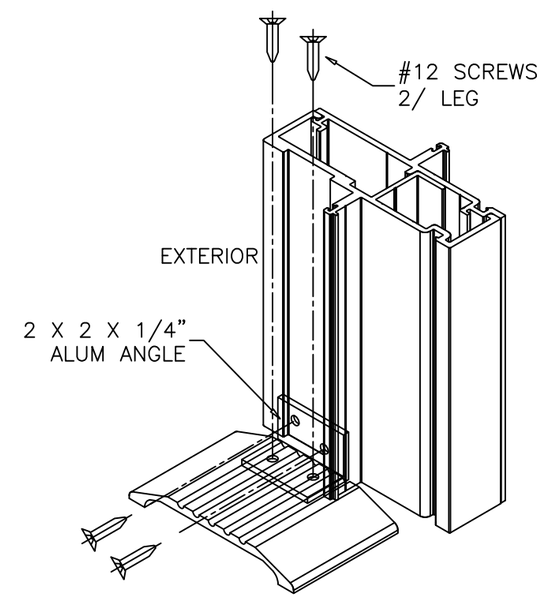

ADA SILL @ MULLION

PRODUCT REVISED
as complying with the Florida Building Code
NOA-No. 22-0822.05
Expiration Date 10/25/2027
By Ishwar I. Chanda
Miami-Dade Product Control

Revision:

PREPARED BY A. LYNN MILLER
1070 TECHNOLOGY DRIVE
N. VENICE, FL 34275
(941) 480-1600
REGISTRATION #29296

WINDOOR® INCORPORATED
104 TRIPLE DIAMOND BLVD.
N. VENICE, FL 34275
(407) 481-8400

Series	Desc.	Title	Scale	Sheet	DWG No.	Rev.
FD450 INSWING	CORNER DETAILS	450 ALUM. FRENCH DOOR - OPAQUE & IS (LM)	NTS	14 OF 14	450FD4B-NOA	B

Drawn By: J ROSOWSKI
Date: 06/12/2020

ANTHONY LYNN MILLER
LICENSE
No. 58705
A. Lynn Miller
08/10/22
STATE OF FLORIDA
PROFESSIONAL ENGINEER

A. LYNN MILLER, P.E.
P.E.# 58705