MIAMI-DADE COUNTY
DEPARTMENT OF REGULATORY AND ECONOMIC RESOURCES (RER)
BOARD AND CODE ADMINISTRATION DIVISION

MIAMI-DADE COUNTY
PRODUCT CONTROL SECTION
11805 SW 26 Street, Room 208
Miami, Florida 33175-2474
T (786) 315-2590 F (786) 315-2599
www.miamidade.gov/economy

NOTICE OF ACCEPTANCE (NOA)

Trane US, Inc.
2473 Fortune Dr.
Lexington, KY 40509

SCOPE:
This NOA is being issued under the applicable rules and regulations governing the use of construction materials. The documentation submitted has been reviewed and accepted by Miami-Dade County RER- Product Control Section to be used in Miami Dade County and other areas where allowed by the Authority Having Jurisdiction (AHJ).

This NOA shall not be valid after the expiration date stated below. The Miami-Dade County Product Control Section (In Miami Dade County) and/or the AHJ (in areas other than Miami Dade County) reserve the right to have this product or material tested for quality assurance purposes. If this product or material fails to perform in the accepted manner, the manufacturer will incur the expense of such testing and the AHJ may immediately revoke, modify, or suspend the use of such product or material within their jurisdiction. RER reserves the right to revoke this acceptance if it is determined by Miami-Dade County Product Control Section that this product or material fails to meet the requirements of the applicable building code.

This product is approved as described herein and has been designed to comply with the High Velocity Hurricane Zone of the Florida Building Code.

DESCRIPTION: Trane Performance Climate Changer Air Handler – Hurricane Unit

APPROVAL DOCUMENT: Drawing No. S65380496, titled "Trane Performance Climate Changer Air Handler – Hurricane Unit", sheets 1 through 40 of 40, prepared by Wolters Engineering, Inc., dated March 20, 2023, signed and sealed by Scott Wolters, P.E., on March 20, 2023, bearing the Miami-Dade County Product Control Approval stamp with the Notice of Acceptance number and the approval date by the Miami-Dade County Product Control Section.

MISSILE IMPACT RATING: Large and Small Missile Impact Resistant

LABELING: Each unit shall bear a permanent label with the manufacturer's name or logo, Lexington, KY or Columbia, SC and the following statement: "Miami-Dade County Product Control Approved", unless otherwise noted herein.

RENEWAL of this NOA shall be considered after a renewal application has been filed and there has been no change in the applicable building code negatively affecting the performance of this product.

TERMINATION of this NOA will occur after the expiration date or if there has been a revision or change in the materials, use, and/or manufacture of the product or process. Misuse of this NOA as an endorsement of any product, for sales, advertising or any other purposes shall automatically terminate this NOA. Failure to comply with any section of this NOA shall be cause for termination and removal of NOA.

ADVERTISEMENT: The NOA number preceded by the words Miami-Dade County, Florida, and followed by the expiration date may be displayed in advertising literature. If any portion of the NOA is displayed, then it shall be done in its entirety.

INSPECTION: A copy of this entire NOA shall be provided to the user by the manufacturer or its distributors and shall be available for inspection at the job site at the request of the Building Official.

This NOA consists of this page 1, evidence submitted page E-1 as well as approval document mentioned above. The submitted documentation was reviewed by **Helmy A. Makar, P.E., M.S.**

MIAMI-DADE COUNTY APPROVED

Helmy A. Makar
07/06/2023

NOA No. 23-0411.03
Expiration Date: 07/06/2028
Approval Date: 07/06/2023

Trane US, Inc.

NOTICE OF ACCEPTANCE: EVIDENCE SUBMITTED

A. DRAWINGS

1. *Drawing No. S65380496, titled "Trane Performance Climate Changer Air Handler – Hurricane Unit", sheets 1 through 40 of 40, prepared by Wolters Engineering, Inc., dated March 20, 2023, signed and sealed by Scott Wolters, P.E., on March 20, 2023.*

B. TESTS

1. *Test reports on 1) Uniform Static Air Pressure Test, Loading per TAS-202,*
   2) Large Missile Impact Test per TAS-201,
   3) Cyclic Wind Pressure Loading per TAS-203,
   along with marked-up drawings and installation diagram of ***Trane Air Handling Size 30 AHU Unit****, prepared by Intertek, Test Report No.* ***M5225.02-450-18 R0****, dated* ***08/03/22****, signed and sealed by Vinu J. Abraham, P.E.*

2. *Test reports on 1) Uniform Static Air Pressure Test, Loading per TAS-202,*
   2) Large Missile Impact Test per TAS-201,
   3) Cyclic Wind Pressure Loading per TAS-203,
   along with marked-up drawings and installation diagram of ***Trane Air Handling Size 30 Pipe Cabinet Unit****, prepared by Intertek, Test Report No.* ***M5225.01-450-18 R0****, dated* ***03/03/22****, signed and sealed by Vinu J. Abraham, P.E.*

C. CALCULATIONS

1. *Calculation of Trane Performance Climate Changer Air Handler Unit, sheets 1 through 12 of 12, prepared by Scott Wolters, P.E., dated 03/20/23, signed and sealed by Scott Wolters, P.E. on 03/20/23.*

D. QUALITY ASSURANCE

1. *By Miami-Dade County Department of Regulatory and Economic Resources.*

E. MATERIAL CERTIFICATIONS

1. *None.*

F. STATEMENTS

1. *FBC, 2020 conformance letter, dated March 20, 2023, signed and sealed by Scott Wolters, P.E.*

Helmy A. Makar, P.E., M.S.
Product Control Section Supervisor
NOA No. 23-0411.03
Expiration Date: 07/06/2028
Approval Date: 07/06/2023

GENERAL NOTES, TRANE PERFORMANCE CLIMATE CHANGER AIR HANDLER HURRICANE UNIT.

1. THIS PRODUCT, FABRICATED AND ANCHORED AS DETAILED IN THIS DRAWING, IS LARGE MISSILE IMPACT RESISTANT (@ 80fps) AND DOES NOT REQUIRE THE USE OF IMPACT PROTECTIVE DEVICES. THIS UNIT MEETS THE ESSENTIAL BUILDING REQUIREMENTS AS PER FLORIDA BUILDING CODE. ALLOWABLE UNIT WALL DESIGN PRESSURE IS +/- 100 PSF, AND THE ROOF DESIGN PRESSURE IS +/- 100 PSF. THIS PRODUCT APPROVAL IS APPLICABLE TO UNIT WIDTH OF 93.5" BY HEIGHT OF 66.25" PLUS THE OUTDOOR ROOF; WHICH IS SHOWN IN THIS APPROVAL.
2. THIS PRODUCT HAS BEEN TESTED TO TAS 201-94, TAS 202-94 STRUCTURAL LOADS, AND TAS 203-94 (REF. TEST REPORTS M5225.01-450-18-R0 AND M5225.02-450-18-R0), AND MEETS THE HIGH VELOCITY HURRICANE ZONE REQUIREMENTS OF THE FLORIDA BUILDING CODE, 2020 EDITION. THIS PRODUCT IS NOT RATED FOR WATER INFILTRATION RESISTANCE AND HAS NOT BEEN TESTED FOR WIND DRIVEN RAIN. THE TESTED PRODUCT REMAINED OPERABLE AFTER IMPACT/CYCLIC TESTS WERE COMPLETED.
3. THIS PRODUCT APPROVAL IS GENERIC IN NATURE AND DOES NOT PROVIDE INFORMATION FOR SPECIFIC PROJECTS WHERE THE CONDITIONS VARY FROM THIS DOCUMENT. THE FLORIDA LICENSED ENGINEER OR ARCHITECT OF RECORD FOR THE PROJECT SHALL BE RESPONSIBLE FOR THE DESIGN, SIZING, AND STRUCTURAL ADEQUACY OF THE PRODUCT FRAMEWORK AS WELL AS CURBING AND ATTACHMENT TO THE ROOF, OR AS ACCEPTED BY THE CORRESPONDING BUILDING DEPARTMENTS.
4. THE STRUCTURAL ADEQUACY OF THE ROOF TO SUPPORT THIS EQUIPMENT IS NOT PART OF THE SCOPE OF THIS PRODUCT APPROVAL AND SHALL BE REVIEWED BY THE CORRESPONDING BUILDING DEPARTMENTS. ANCHORAGE SHOWN HEREIN HAS BEEN ANALYZED FOR SLIDING AND OVERTURNING LOADS FOR THE CONFIGURATION INDICATED. AND SMALLER CONFIGURATIONS ASSUMING THE HEIGHT IS NO MORE THAN TWICE THE WIDTH. OTHER CONFIGURATIONS NOT INDICATED HERE SHALL BE ANALYZED BY THE DESIGN PROFESSIONAL OF RECORD TO PREVENT SLIDING AND OVERTURNING OF THE EQUIPMENT, AND SHALL BE REVIEWED BY THE CORRESPONDING BUILDING DEPARTMENTS.
5. THIS PRODUCT APPROVAL IS FOR THE STRUCTURAL AND IMPACT/CYCLIC PERFORMANCE OF THE AIR HANDLER, INCLUDING OPTIONAL EXTERNAL ACCESSORIES, PIPE CABINET AND ENCLOSURES. THESE ENCLOSURES INCLUDE THE OPTIONAL ITEMS AS SHOWN IN THE DRAWINGS, FOR EXAMPLE HOODS AND LOUVERS ATTACHED TO AIR INTAKES AND EXHAUST OPENINGS. THE EXTERNAL ACCESSORIES INCLUDE OPTIONAL WINDOWS/VIEWPORTS, AND DOORS, AS WELL AS THE STRUCTURAL ELEMENTS/HOUSINGS FOR STARTER, CONTROLS, MINIHELIC GAUGES, JUNCTION BOXES, UV INTENSITY METERS, DISCONNECT SWITCHES, RACEWAYS, AND GFCI INTERFACES. THIS PRODUCT APPROVAL DOES NOT INCLUDE INTERNALLY MOUNTED COMPONENTS OR ANY ELECTRICAL DEVICES OR CIRCUITRY.
6. THE PRODUCT IS CONSTRUCTED IN BUILD GROUPS. BUILD GROUPS MAY BE ASSEMBLED INTO SHIPPING SECTIONS; ASSEMBLY SHALL BE WITH SPLICE PLATES AS SHOWN HEREIN. BUILD GROUPS OR SHIPPING SECTIONS MAY BE FURTHER ASSEMBLED INTO INSTALLED UNIT.
7. OPTIONAL PIPE CABINET (PC) SECTIONS MAY BE ADDED INTO THE ASSEMBLY. IF USED, ASSEMBLY WITH OTHER BUILD UNITS OR SHIPPING SECTIONS SHALL BE WITH THREADED ROD BETWEEN LIFTING LUGS AS SHOWN HEREIN.
8. THE 4/3 ALLOWABLE STRESS INCREASE HAS NOT BEEN USED IN THE ANCHOR ANALYSIS FOR THIS SYSTEM.
9. DISSIMILAR MATERIALS THAT COME INTO CONTACT SHALL BE COATED OR OTHERWISE PROTECTED PER FBC TO PREVENT GALVANIC REACTIONS.
10. ALL HARDWARE & FASTENERS SHALL BE IN ACCORDANCE WITH THESE DRAWINGS & MAY NOT VARY UNLESS SPECIFICALLY MENTIONED ON THE DRAWINGS. SPECIFIED EMBEDMENT TO BASE MATERIAL SHALL BE BEYOND ALL FINISHES.
11. ACRONYMS USED IN THIS APPROVAL ARE AS FOLLOWS: EOU IS END OF UNIT, DOAF IS DIRECTION OF AIR FLOW, SS IS SHIPPING SPLIT, PC IS PIPE CABINET AND BG IS BUILD GROUP.
12. ALL UNITS OF MEASURE ARE IN INCHES UNLESS OTHERWISE SPECIFIED.
13. 2" MAX. DIAMETER CIRCULAR HOLES MAY BE FIELD DRILLED THROUGH THE EXTERIOR WALLS FOR INSTALLATION OF CONDUIT OR COMPONENTS. HOLES SHALL BE PROTECTED FROM WIND BY CONNECTED EQUIPMENT OR CONDUIT, BY OTHERS, AND PROPER SEALING TO PREVENT AIR EXCHANGE SHALL BE BY OTHERS. HOLES SHALL BE 3" MAX. FROM ANY PANEL EDGE. MAX. 4 FIELD-DRILLED HOLES PER PANEL, 12" ON CENTER MINIMUM.

SHEET	CONTENT
1	INDEX
2-3	UNIT LAYOUT
4	BILL OF MATERIAL
5-9	UNIT CROSS SECTIONS
10-11	BASE ASSEMBLY
12	ROOF ASSEMBLY
13	STANDARD WALL PANEL AND STANDARD DOOR
14	STANDARD DOOR CROSS SECTIONS
15	STANDARD DOOR HARDWARE LAYOUT
16	PREMIUM DOOR CROSS SECTIONS
17	PREMIUM DOOR HARDWARE LAYOUT
18	COMPONENT PART INSTALLATION
19	WALL STRUCTURE DETAILS AND PLACEMENT OPENING DETAILS ON FRONT
20	SHIPPING SPLIT CONSTRUCTION
21	HOOD ASSEMBLY
22	LOUVER ASSEMBLY
23-24	PIPE CABINET LAYOUT
25-26	PIPE CABINET CROSS SECTIONS
27-28	PIPE CABINET ROOF ASSEMBLY
29	STANDARD UNIT AND PIPE CABINET ANCHORAGE INSTALLATION
30-40	LISTS OF PART DETAIL

Approved as complying with the Florida Building Code
Date 07/06/2023
NOA# 23-0411.03
Miami Dade Product Control
By Helga A. Mohr

DRAWING # S65380496	DESC. TRANE PERFORMANCE CLIMATE CHANGER AIR HANDLER – HURRICANE UNIT	TRANE US Inc.	SCOTT WOLTERS FL PE# 62354 WOLTERS ENGINEERING (COA# 27184) 15211 97TH ROAD N WEST PALM BEACH, FL 33412 PH/FAX:(561) 225-1982	REVISION HISTORY	REV.
SHEET 1 OF 40	SECTION		SEAL: SCOTT WOLTERS LICENSE NO 62354 STATE OF FLORIDA PROFESSIONAL ENGINEER MAR 20 2023	BY	ECT#	REV DATE

4 3 2 1

MAXIMUM PANEL	WIDTH MAX.	LENGTH MAX.	AREA (SQFT)
OUTER ROOF PANEL	96.500"	55.976"	37.512

CROSS SECTION	REFERENCE PAGE
A-A	14
B-B	14
E-E	14
F-F	5, 6

NOTE(S):
1. UNIT SHOWN HERE AS TESTED.
2. ON ACTUAL UNITS, THE COMPONENTS AND FEATURES MAY VARY IN QTY WITH ANY COMBINATIONS OF COMPONENTS AND FEATURES.
3. LARGE AND STANDARD SECTIONS VARY IN CONSTRUCTION ON THE ROOF AND THE BASE ONLY. THE REST ARE THE SAME. SEE PAGE 11 FOR THE BASE VARIANCE AND PAGE 12 FOR THE ROOF VARIANCE.

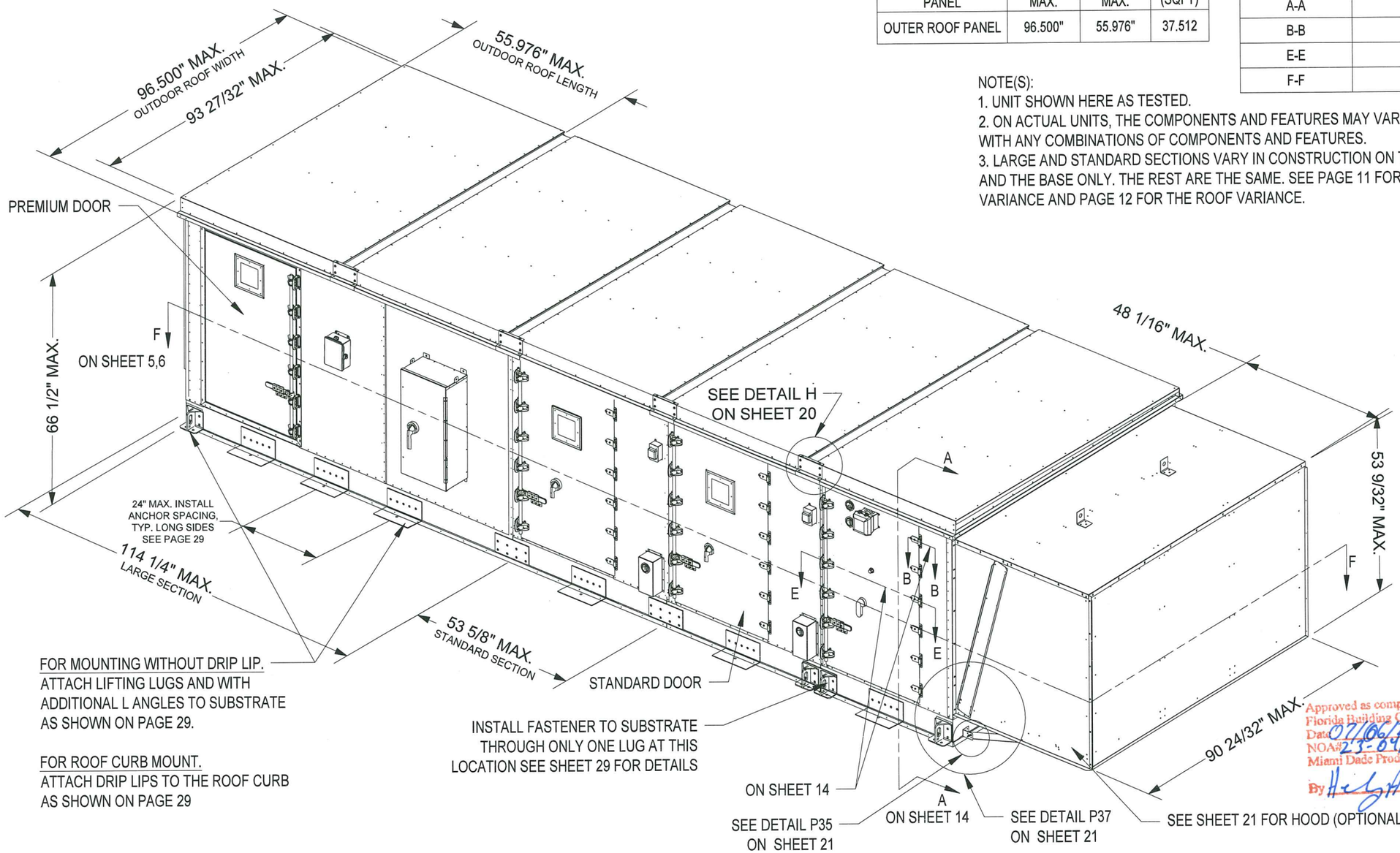

Approved as complying with the Florida Building Code
Date 07/06/2023
NOA# 23-0411.03
Miami Dade Product Control
By

SIDE 1 VIEW

DRAWING # S65380496	DESC. TRANE PERFORMANCE CLIMATE CHANGER AIR HANDLER – HURRICANE UNIT	TRANE US Inc.	SCOTT WOLTERS FL PE# 62354 WOLTERS ENGINEERING (COA# 27184) 15211 97TH ROAD N WEST PALM BEACH, FL 33412 PH/FAX:(561) 225-1982	REVISION HISTORY	REV.
SHEET 2 OF 40	SECTION		SEAL: SCOTT WOLTERS LICENSE No 62354 STATE OF FLORIDA PROFESSIONAL ENGINEER MAR 20 2023	BY / ECT#	REV DATE

4 3 2 1

MAXIMUM PANEL	WIDTH MAX.	HEIGHT MAX.	AREA (SQFT)
EOU PANEL	47.734"	56.817"	18.834
SIDE PANEL STD	54.009"	56.817"	21.310

CROSS SECTION	REFERENCE PAGE
G-G	9, 11, 12
H-H	9, 11, 12
K-K	7, 8
C-C	16
D-D	16

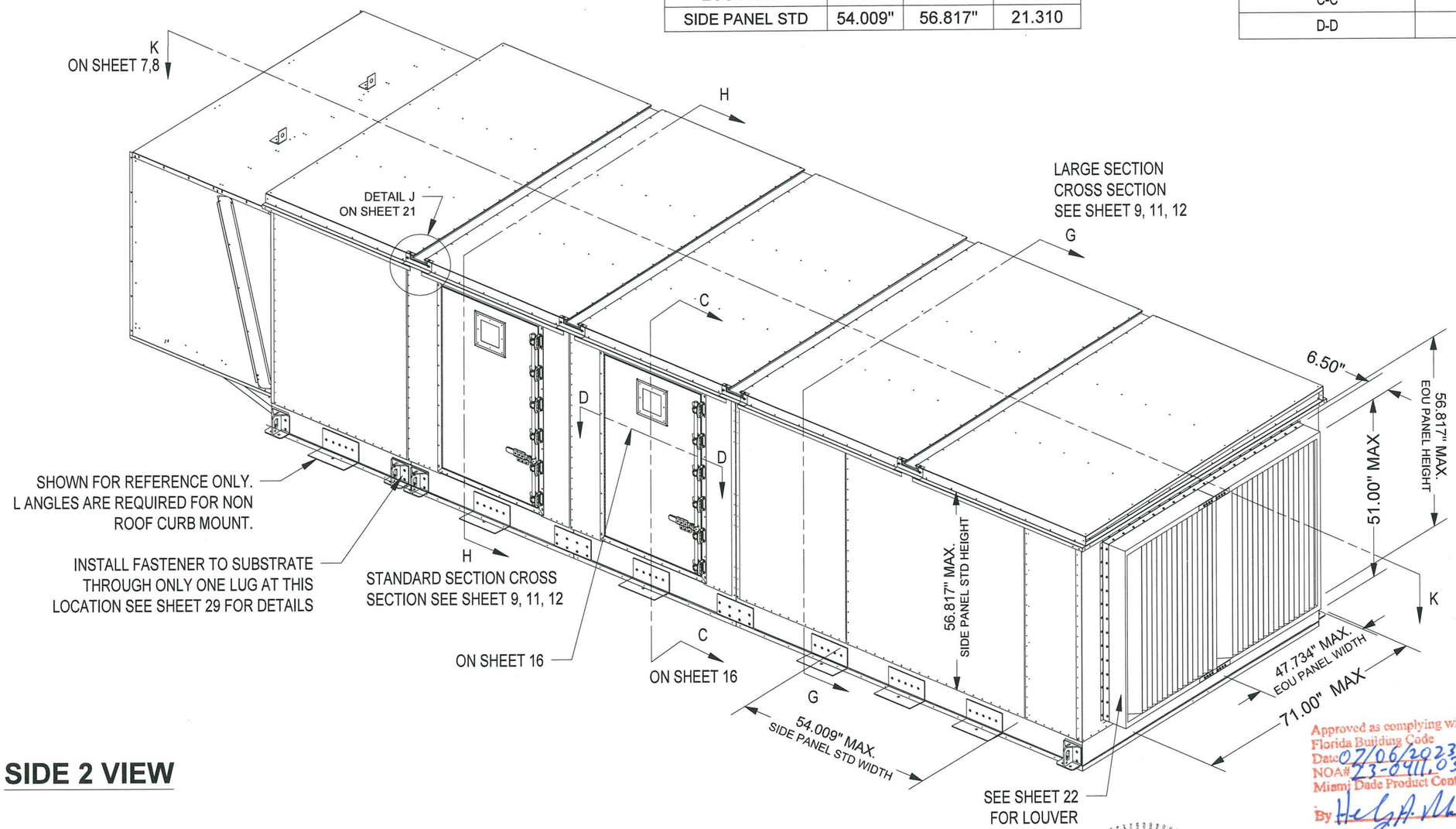

SIDE 2 VIEW

Approved as complying with the
Florida Building Code
Date 02/06/2023
NOA# 23-0111.03
Miami Dade Product Control
By

DRAWING # S65380496	DESC. TRANE PERFORMANCE CLIMATE CHANGER AIR HANDLER – HURRICANE UNIT	TRANE US Inc.	SCOTT WOLTERS FL PE# 62354 WOLTERS ENGINEERING (COA# 27794) 15211 97TH ROAD N WEST PALM BEACH, FL 33412 PH/FAX:(561) 225-1982	SEAL: SCOTT WOLTERS LICENSE No 62354 STATE OF FLORIDA PROFESSIONAL ENGINEER MAR 20 2023	REVISION HISTORY	REV.
SHEET 3 OF 40	SECTION				BY	ECT#	REV DATE

4 3 2 1

BILL OF MATERIALS

1	DOOR GRIP	PVC/NBR
2	DOOR HINGE	GALV. STEEL
3	DOOR CAM BRACKET	GALV. STEEL
4	STRIKE PLATE	GALV. STEEL
5	GANGED OPERATING HANDLE	GALV. STEEL
6	PADLOCK BRACKET	GALV. STEEL
7	KEEPER/DOOR CAM	ZAMAK#3
8	DOOR TUBE	STEEL
9	DOOR PLUG	STEEL
10	MAGNEHELIC GAGE	VARIES
11	TEST PORT	VARIES
12	ROTARY DISCONNECT	GALV. STEEL
13	HAT CHANNEL BRACKET	STEEL
14	HAT CHANNEL	GALV. STEEL
15	SHORT ROOF KEEL	GALV. STEEL
16	TALL ROOF KEEL	GALV. STEEL
17	BASE RAIL	GALV. STEEL
18	BASE RAIL	GALV. STEEL
19	LIFTING LUG	GALV. STEEL
20	DRIP LIP	GALV. STEEL
21	OUTDOOR ROOF END CAP	GALV. STEEL
22	PTAF ROOF CHANNEL	GALV. STEEL
23	SUPT PTAF CHANNEL	GALV. STEEL
24	SUPT VERT CHANNEL	GALV. STEEL
25	HURRICANE SPLICE PLATE	GALV. STEEL
27	MANUFACTURE DOOR HEADER	GALV. STEEL
28	MANUFACTURE DOOR FOOTER	GALV. STEEL
29	HOOD WALL ANCHOR	GALV. STEEL
30	JUNCTION BOX	GALV. STEEL
31	ROOF DOAF BEAM	GALV. STEEL
32	GFCI	VARIES
33	WINDOW FRAME COVER	GALV. STEEL
34	MICP BOX	GALV. STEEL
35	EXT JUNCTION BOX	GALV. STEEL
36	BASE DOAF BEAM	GALV. STEEL
37	FOAM RETAINER	GALV. STEEL
38	NOA CERTIFIED LOUVER	VARIES
39	ANGLE CORNER	GALV. STEEL
40	L ANGLE CHANNEL	GALV. STEEL
41	WALL ANCHOR	GALV. STEEL
43	HOOD LIFTING LUG	GALV. STEEL
44	BACKING PLATE	GALV. STEEL
45	ELIMINATOR COVER PLATE	GALV. STEEL
46	BOTTOM CHANNEL	GALV. STEEL
47	ANGLE CHANNEL / VERT SUPPORT CHANNEL	GALV. STEEL
48	TOP CHANNEL / BOTTOM FRAME CHANNEL	GALV. STEEL
49	TOP FRAME CHANNEL	GALV. STEEL
50	FRONT L-ANGLE CHANNEL	GALV. STEEL
51	BACK L-ANGLE CHANNEL	GALV. STEEL
52	HURRICANE L-ANGLE CHANNEL	GALV. STEEL
53	ELIMINATOR SPACER	GALV. STEEL

56	DIAGONAL CHANNEL	GALV. STEEL
57	BASE RAIL BRACKET	GALV. STEEL
58	ANGLE SUPPORT	GALV. STEEL
59	DOOR MOUNTING FRAME	ALUMINUM
60	NARROW DOOR JAMB INNER	GALV. STEEL
61	NARROW DOOR JAMB OUTER	GALV. STEEL
62	STANDARD DOOR JAMB INNER	GALV. STEEL
63	STANDARD DOOR JAMB OUTER	GALV. STEEL
64	SIDE PANEL INNER	GALV. STEEL
65	SIDE PANEL OUTER	GALV. STEEL
66	SIDE PANEL INNER	GALV. STEEL
67	SIDE PANEL OUTER	GALV. STEEL
70	BASE PANEL INNER	GALV. STEEL
71	BASE PANEL OUTER	GALV. STEEL
72	ROOF PANEL INNER	GALV. STEEL
73	ROOF PANEL OUTER	GALV. STEEL
74	MANUFACTURE DOOR PANEL INNER	GALV. STEEL
75	MANUFACTURE DOOR PANEL OUTER	GALV. STEEL
76	OUTDOOR ROOF PANEL	GALV. STEEL
77	OUTDOOR ROOF PANEL	GALV. STEEL
86	BASE PANEL INNER	GALV. STEEL
87	BASE PANEL OUTER	GALV. STEEL
90	ROOF PANEL INNER	GALV. STEEL
91	ROOF PANEL OUTER	GALV. STEEL
92	PREMIUM DOOR PANEL INNER	GALV. STEEL
93	PREMIUM DOOR PANEL OUTER	GALV. STEEL
94	CORNER SEAM CAP	GALV. STEEL
95	PC ROOF ANGLE	GALV. STEEL
96	5/16"-18 x 7/8" SHEET METAL SCREW	GRADE 5 STEEL
97	SUPPORT MULLION ASSEMBLY	GALV. STEEL
98	BASE SUPPORT CHANNEL/PC BASE ANGLE	GALV. STEEL
99	PC LIFTING LUG	GALV. STEEL
100	PC OUTDOOR ROOF PANEL	GALV. STEEL
101	OUTDOOR ROOF SUPPORT	GALV. STEEL
102	ANGLE SUPPORT	GALV. STEEL
103	.06" THICK x .38" WIDE TAPE	BUTYL
104	THREADED ROD 1/2"-13 x 10.5"	GALV. STEEL
105	NUT 1/2"-13 HEX MACHINE	GALV. STEEL
106	WASHER .563" ID x 1.375" OD	GALV. STEEL
107	UNIT WELD BRACKET	GALV. STEEL
108	SCREW; .375-16 X 0.750 HEX CAP	GRADE 5 STEEL
109	WASHER; .438 ID X 1.000 OD	GRADE 5 STEEL
110	NUT; HEX .375 -16	GRADE 5 STEEL
111	PC BASE RAIL	GALV. STEEL

Approved as complying with the Florida Building Code
Date 07/06/2023
NOA# 23-0411.03
Miami Dade Product Control
By

125	HOOD FRONT PANEL	GALV. STEEL
126	HOOD SIDE PANEL	GALV. STEEL
128	HOOD TOP PANEL	GALV. STEEL
129	10-16 X 3/4" SELF-DRILLING SCREW	GRADE 5 STEEL
130	10-16 X 1.75" SELF-DRILLING SCREW	GRADE 5 STEEL
131	.188(.06" COMPRESSED) X .625" GASKET	PVC/NBR
132	1/4"-14 X 3/4" SELF-DRILLING SCREW	GRADE 5 STEEL
133	.188 DIA(THRU HOLE .193) RIVETS	GALV. STEEL
134	HOOD BACKING PLATE	GALV. STEEL
135	DOUBLE SIDED TAPE 1/16 (COMPR.) X 3/4 X 216	PVC/NBR
136	CORNER BLOCK	GALV. STEEL
137	0.06" THICK LUG GASKET	PVC/NBR
138	1/2" - 13 X 1.2" HEX CAP BOLT	GRADE 5 STEEL
139	SINGLE PART ADHESIVE SIKAFLEX	POLYMER
140	.125" THICK X 2" WIDE TAPE	POLYMER TAPE
141	POLYURETHANE EXPANSION FOAM - THICKNESS 2"	POLYURETHANE
142	DECORATIVE COVER	GALV. STEEL
143	1/4" - 20 X 0.4" SET SCREW	GRADE 5 STEEL
144	SEAM CAP	GALV. STEEL
145	.38" THICK X 2" WIDE ROLL	BUTYL
146	SCREW; M4 X 60 MM, MACH	GRADE 5 STEEL
147	1" CONDUIT BUSHING	GALV. STEEL
148	DISCONNECT SHAFT	GALV. STEEL
149	HANDLE; CIRCUIT BREAKER DOOR	STEEL
150	STRUCT. ADHESIVE 2 PART	POLYMER
151	PREMIUM DOOR HEADER	GALV. STEEL
152	PREMIUM DOOR FOOTER	GALV. STEEL
153	.250-14 X .75 LEACHED SELF DRILLER WITH PLASTISOL	LOW CARBON STEEL
154	.375" THICK X .750" WIDE GASKET	PORON
155	UV DISCONNECT SWITCH	VARIES
156	.120" THICK X 2" WIDE TAPE	BUTYL
157	MINIHELIC MOUNTING PLATE	GALV. STEEL
158	SCREW; PHILLIPS, PAN HEAD, 4-40 X 1.250	GRADE 5 STEEL
159	BASE RAIL SPLICE PLATE	GALV. STEEL
160	0.06" THICK PLATE GASKET	PVC/NBR
161	PIANO HINGE	ALUMINUM
162	FLEXIGLASS WINDOW	FLEXIGLASS
163	ROOF BEAM CAP	GALV. STEEL
164	LOCKNUT; .250 - 20 NYLON	GRADE 5 STEEL
165	SCREW; .250, HEX CAP WITH WASHER X 2.5"	GRADE 5 STEEL
166	WASHER; .328 ID X .625 OD X .047 T	STEEL
167	END BRACKET (TALL)	GALV. STEEL
168	END BRACKET (SHORT)	GALV. STEEL
169	END GASKET (TALL)	PVC/NBR
170	END GASKET (SHORT)	PVC/NBR
171	12" PLATE	GALV. STEEL
172	18 GAUGE MIN THICK STRAP	BUTYL
173	SCREW; .313 X 3.00" LONG	GRADE 5 STEEL

NOTE(S):

1. PVC/NBR IN BOM TO THE LEFT INDICATES POLYVINYL CHLORIDE / ACRYLONITRILE BUTADIENE RUBBER, SINGLE-SIDED
2. THE BOM IS FOR SHEET 1-40

DRAWING # S65380496	DESC. TRANE PERFORMANCE CLIMATE CHANGER AIR HANDLER – HURRICANE UNIT	TRANE US Inc.	SCOTT WOLTERS FL PE# 62354 WOLTERS ENGINEERING (COA# 27194) 15211 97TH ROAD N WEST PALM BEACH, FL 33412 PH/FAX:(561)225-1982	REVISION HISTORY	REV.
SHEET 4 OF 40	SECTION		SEAL	BY / ECT#	REV DATE

STATE OF FLORIDA PROFESSIONAL ENGINEER SCOTT WOLTERS No 62354 MAR 20 2023

UNIT SECTION F-F

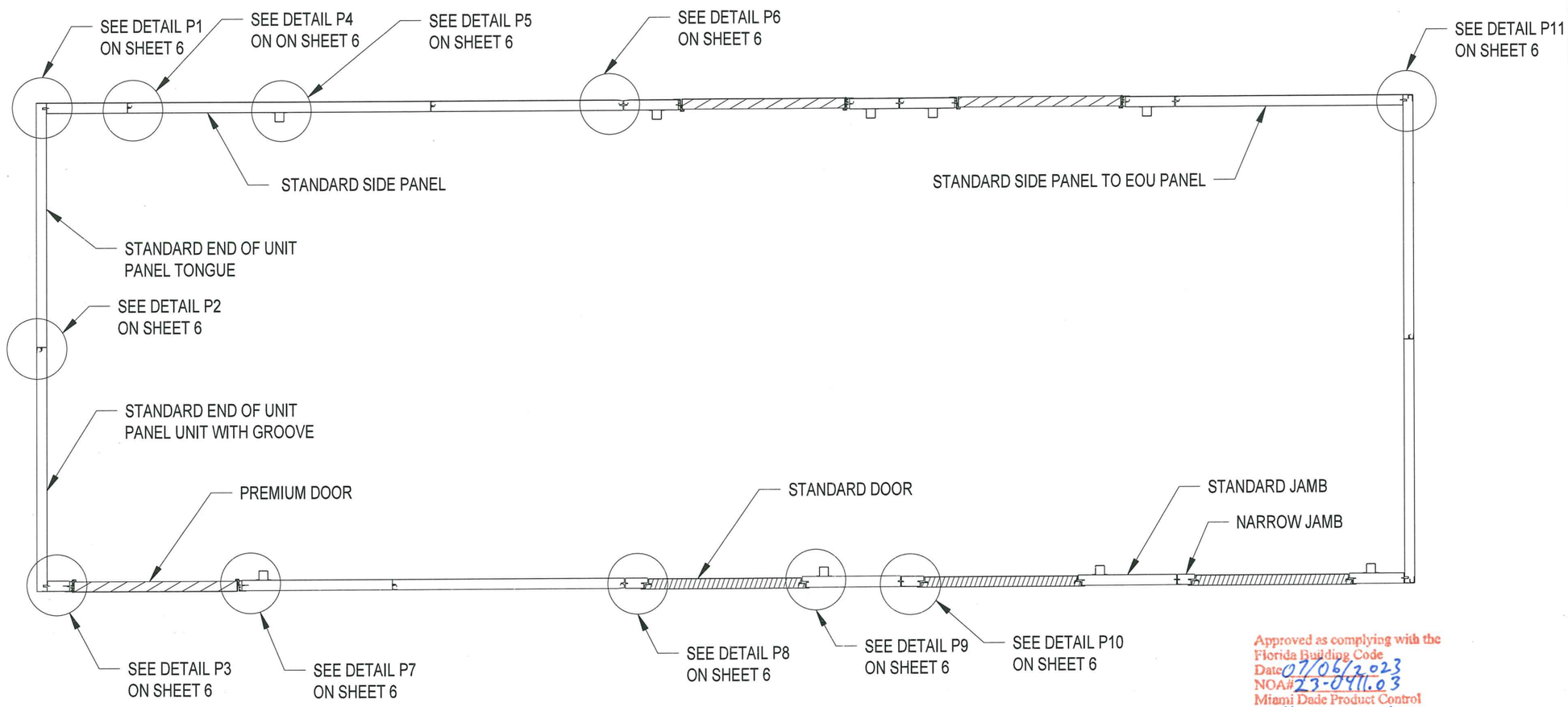

Approved as complying with the
Florida Building Code
Date 07/06/2023
NOA# 23-0411.03
Miami Dade Product Control
By

NOTE(S):
1. THIS VIEW IS ISOLATED TO UNIT CASING ONLY ALL OTHER PERIPHERIL COMPONENTS SUCH AS HOOD, LOUVER AND STARTER BOXES ARE NOT SHOWN.
2. FOR DETAIL P5 AND P9 ON SHEET 5, REFERENCE NOTES ON PAGE 6.

DRAWING # S65380496	DESC. TRANE PERFORMANCE CLIMATE CHANGER AIR HANDLER – HURRICANE UNIT	TRANE US Inc.	SCOTT WOLTERS FL PE# 62354 SEAL WOLTERS ENGINEERING (COA# 27194) 15211 97TH ROAD N WEST PALM BEACH, FL 33412 PH/FAX: (561) 225-1982	REVISION HISTORY	REV.
SHEET 5 OF 40	SECTION			BY	ECT# / REV DATE

SCOTT WOLTERS LICENSE No 62354 STATE OF FLORIDA PROFESSIONAL ENGINEER
MAR 20 2023

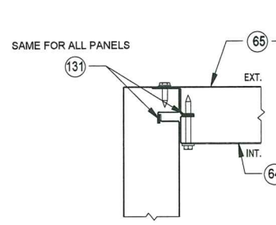

DETAIL P1. EOU TO SIDE WALL

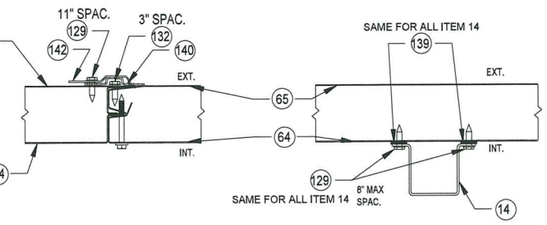

DETAIL P4. SIDE WALL TO SIDE WALL

DETAIL P5. HAT CHANNEL TO SIDE WALL

NOTE 2

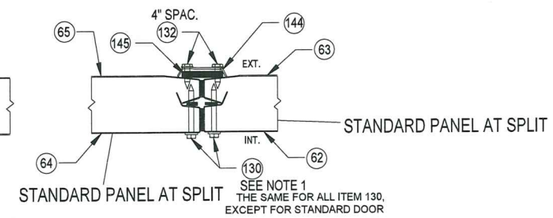

DETAIL P6. SHIPPING SPLIT JOINT

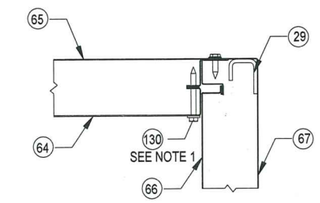

DETAIL P11. HOOD ANCHOR TO EOU

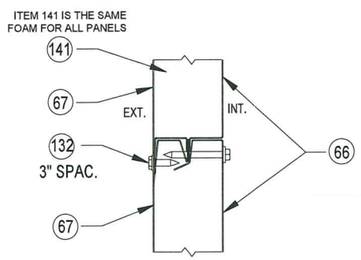

DETAIL P2. EOU TO EOU

UNIT SECTION F-F -DETAILS

NOTE(S):

1. FOR STANDARD WALL PANEL AND STANDARD DOOR PANEL ADDITIONAL SCREWS ON THE INNER SKIN, REFER TO SHEET 13.
2. WHEN A SIDE WALL IS UNSUPPORTED BY ANY STRUCTURE, AND THE SECTION IS LARGER THAN 56", A HAT CHANNEL IS REQUIRED ON THE SIDE WALL.
3. HAT CHANNEL REQUIRED ON ALL STANDARD DOOR JAMBS (NOT NARROW JAMBS), UNLESS COMPONENT STRUCTURES EXIST IN ITS PLACE.
4. FOR DETAILS OF HAT CHANNEL LOCATIONS SEE SHEET 19.

Approved as complying with the Florida Building Code
Date 07/06/2023
NOA# 23-0911.03
Miami Dade Product Control
By

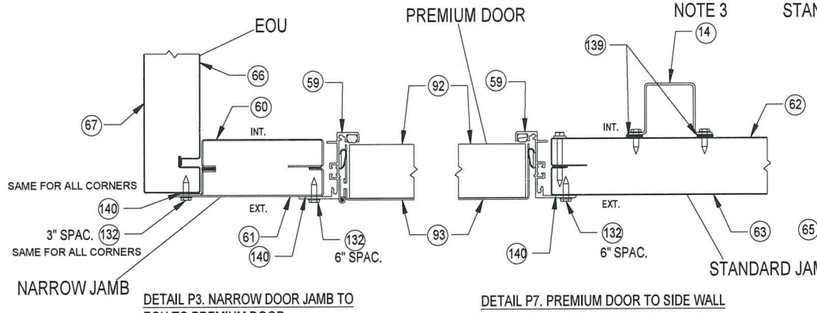

DETAIL P3. NARROW DOOR JAMB TO EOU TO PREMIUM DOOR

DETAIL P7. PREMIUM DOOR TO SIDE WALL

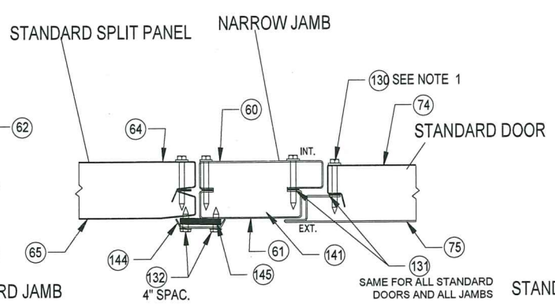

DETAIL P8. NARROW DOOR JAMB TO STANDARD SPLIT PANEL

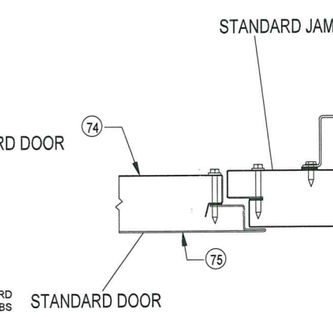

DETAIL P9. STD DOOR TO STD JAMB

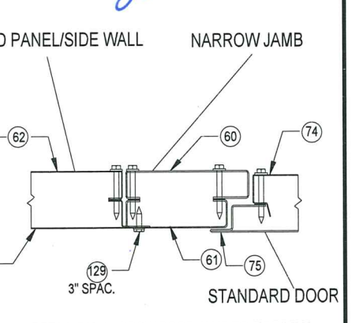

DETAIL P10. NARROW DOOR JAMB TO SIDE WALL TO STANDARD DOOR

DRAWING # S65380496	DESC. TRANE PERFORMANCE CLIMATE CHANGER AIR HANDLER – HURRICANE UNIT	TRANE US Inc.	SCOTT WOLTERS FL PE# 62354 WOLTERS ENGINEERING (COA# 27194) 1211 RAILROAD N WEST PALM BEACH, FL 33412 PH/FAX:(561) 225-1982 SEAL: SCOTT WOLTERS LICENSE No 62354 STATE OF FLORIDA PROFESSIONAL ENGINEER MAR 20 2023	REVISION HISTORY	REV.
SHEET 6 OF 40	SECTION			BY	ECT#	REV DATE

4 3 2 1

UNIT SECTION K-K

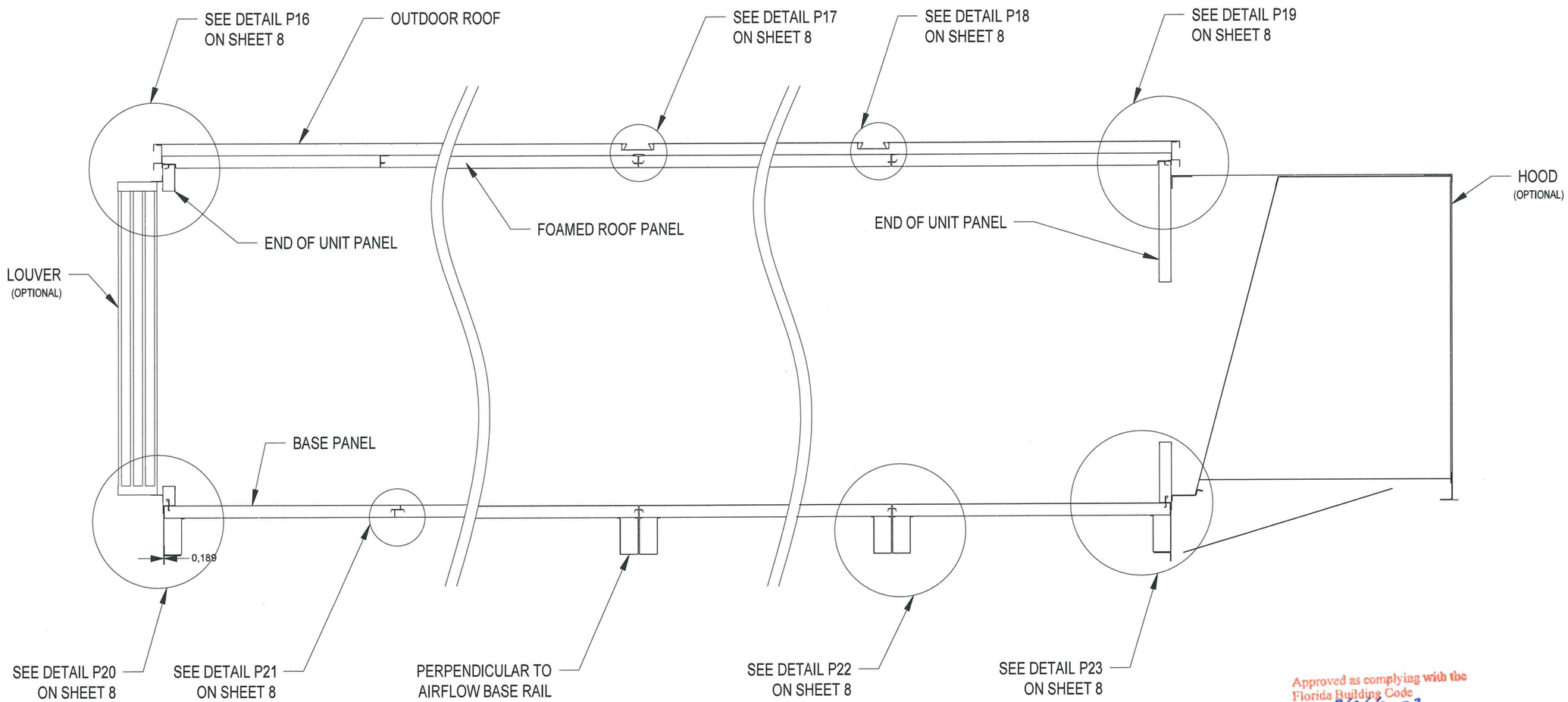

Approved as complying with the
Florida Building Code
Date 07/06/2023
NOA# 23-0411.03
Miami Dade Product Control
By

DRAWING # S65380496	DESC. TRANE PERFORMANCE CLIMATE CHANGER AIR HANDLER – HURRICANE UNIT	TRANE US Inc.	SCOTT WOLTERS FL REG 62354 WOLTERS ENGINEERING (COA# 27194) 15211 90TH ROAD N WEST PALM BEACH, FL 33412 PH/FAX:(561)225-1982 SEAL LICENSE NO 62354 STATE OF FLORIDA PROFESSIONAL ENGINEER MAR 20 2023	REVISION HISTORY	REV.
SHEET 7 OF 40	SECTION			BY	ECT#	REV DATE

UNIT SECTION K-K -DETAILS

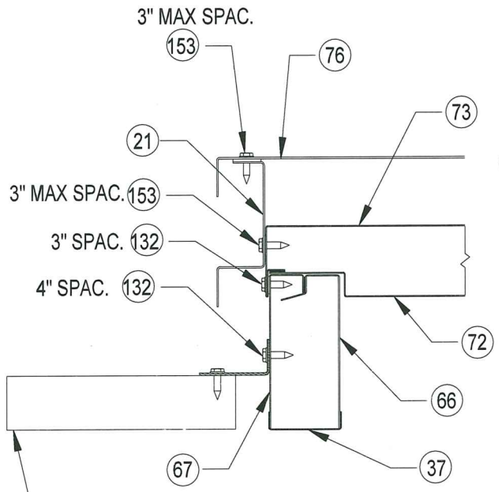

DETAIL P16. ROOF TO EOU

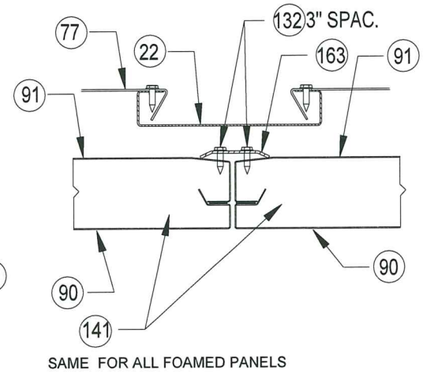

DETAIL P17. ROOF JOINT AT SHIPPING SPLIT

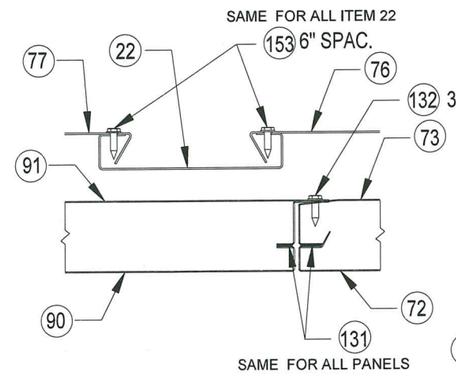

DETAIL P18. ROOF TO ROOF

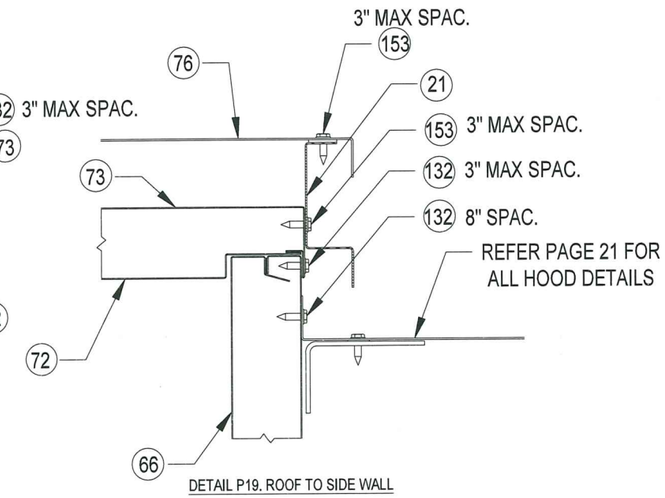

DETAIL P19. ROOF TO SIDE WALL

LOUVER,
SEE PAGE 22 FOR DETAIL

NOTE(S):
1. BASE RAIL ADHERE TO BASE PANEL WITH STRUCTURAL ADHESIVE.

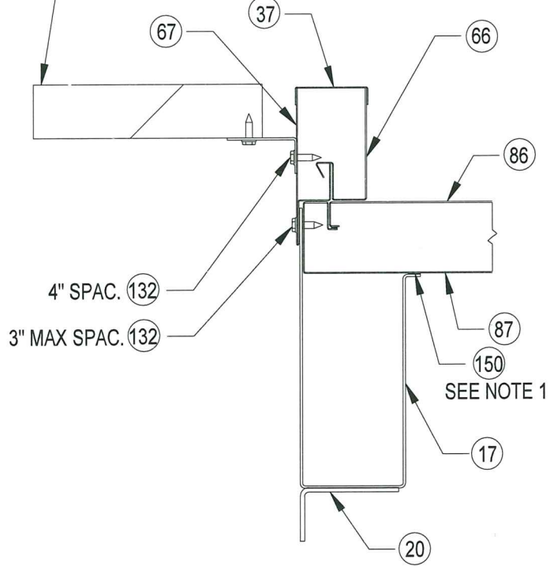

DETAIL P20. EOU TO BASE

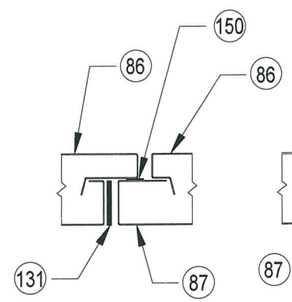

DETAIL P21. BASE TO BASE

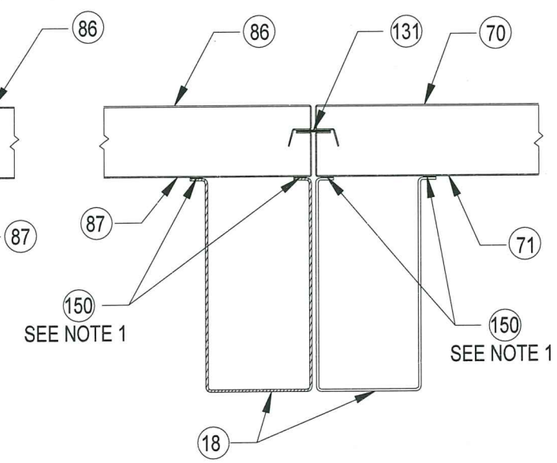

DETAIL P22. BASE TO BASE

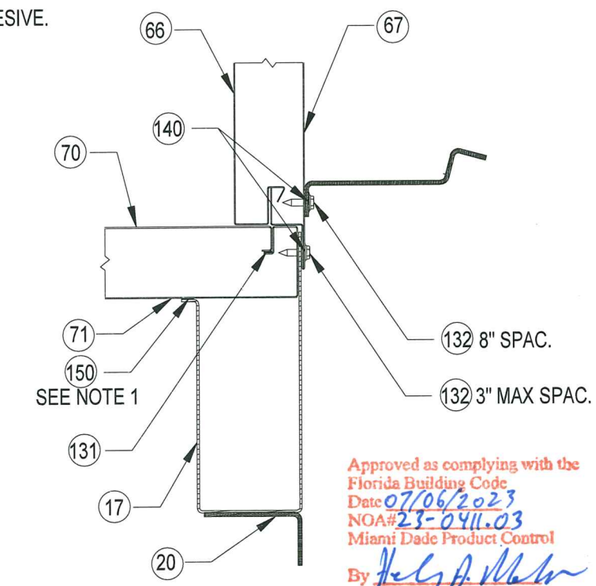

DETAIL P23. BASE TO SIDE WALL

Approved as complying with the
Florida Building Code
Date 07/06/2023
NOA# 23-0411.03
Miami Dade Product Control
By

DRAWING # S65380496	DESC. TRANE PERFORMANCE CLIMATE CHANGER AIR HANDLER – HURRICANE UNIT	TRANE US Inc.	SCOTT WOLTERS FL PE# 62354 WOLTERS ENGINEERING (COA# 27194) 15211 97TH ROAD N WEST PALM BEACH, FL 33412 PH/FAX:(561)225-1982	REVISION HISTORY	REV.
SHEET 8 OF 40	SECTION			BY / ECT#	REV DATE

SCOTT WOLTERS LICENSED No 62354 STATE OF FLORIDA PROFESSIONAL ENGINEER
MAR 20 2023

B

A

4 3 2 1

UNIT SECTION G-G AND DETAILS

BG LENGTH > 53"/BG WITH SPLIT ROOF

NOTE(S):
1. BASE RAIL ADHERE TO BASE PANEL WITH STRUCTURAL ADHESIVE.
2. REFERENCE SHEET 11 FOR BASE PANEL, SHEET 12 FOR FOAMED ROOF PANEL, AND REFERENCE 13-19 FOR SIDE PANELS.

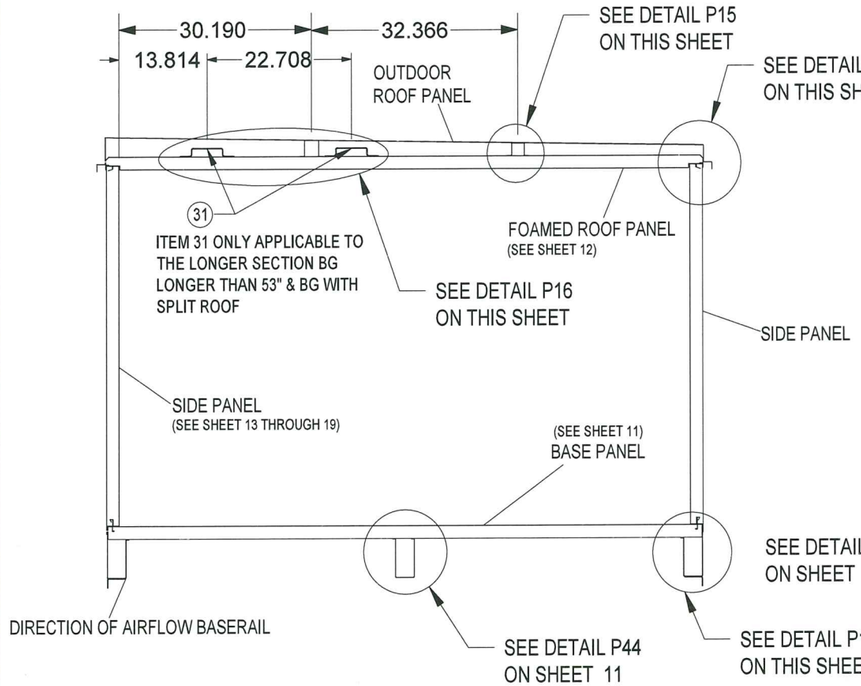

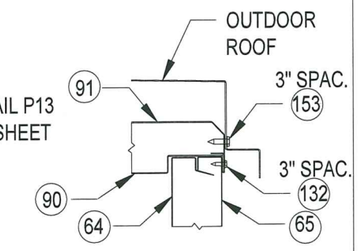

DETAIL P13. ROOF TO SIDE WALL
SAME FOR ALL CORNERS

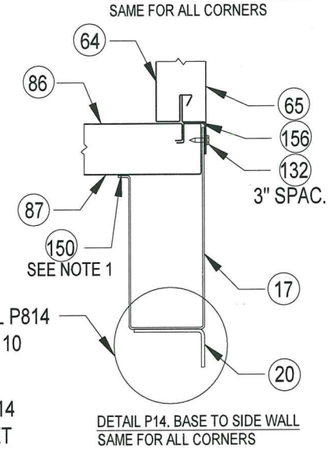

DETAIL P14. BASE TO SIDE WALL
SAME FOR ALL CORNERS

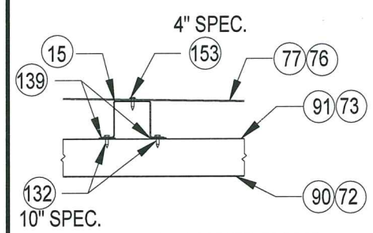

DETAIL P15. SHORT ROOF KEEL TO ROOF

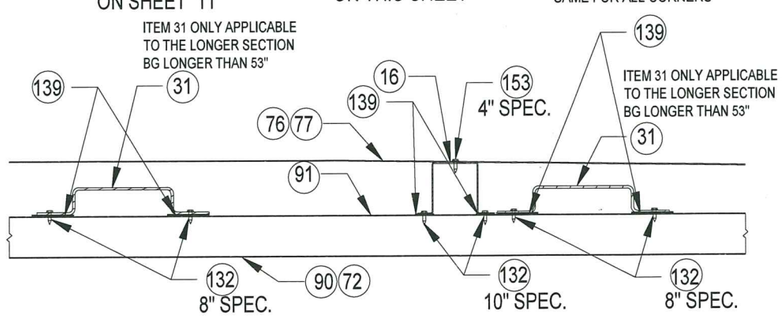

DETAIL P16. TALL ROOF KEEL/ROOF BEAM TO ROOF

UNIT SECTION H-H AND DETAILS

BG LENGTH <= 53"

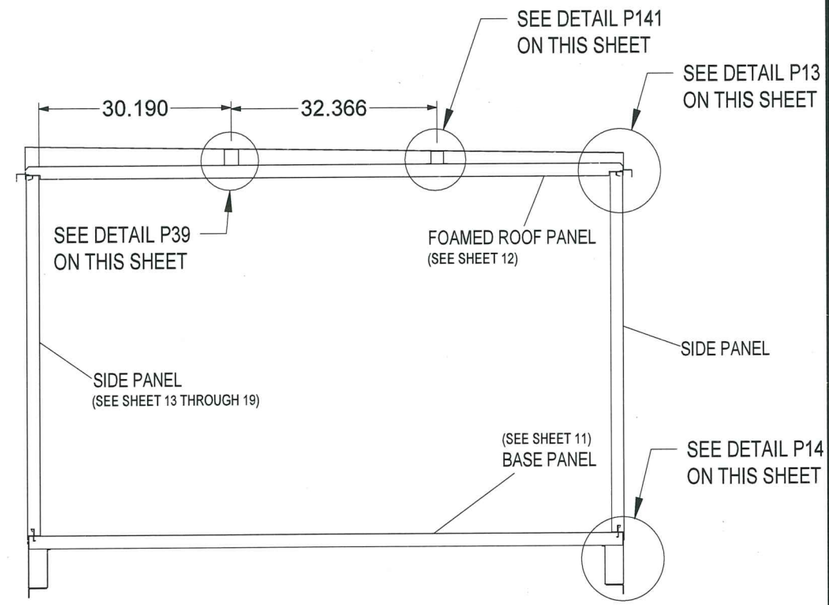

Approved as complying with the Florida Building Code
Date 07/06/2023
NOA# 23-0411.03
Miami Dade Product Control
By

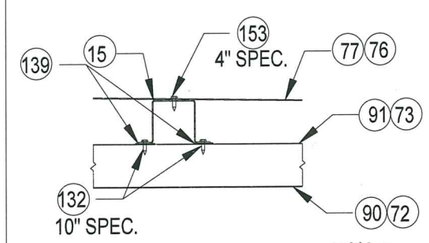

DETAIL P141. SHORT ROOF KEEL TO ROOF

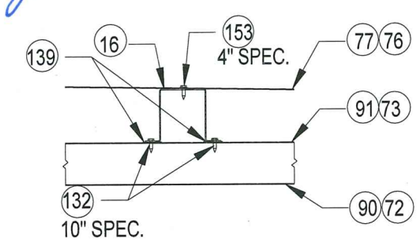

DETAIL P39. TALL ROOF KEEL TO ROOF

DRAWING # S65380496	DESC.	TRANE PERFORMANCE CLIMATE CHANGER AIR HANDLER – HURRICANE UNIT	TRANE US Inc.	SCOTT WOLTERS FL PE# 62354 WOLTERS ENGINEERING (COA# 27184) 15221 97TH ROAD N WEST PALM BEACH, FL 33412 PH/FAX: (561) 225-1982	REVISION HISTORY	REV.
SHEET 9 OF 40	SECTION			SEAL SCOTT WOLTERS LICENSE No 62354 STATE OF FLORIDA PROFESSIONAL ENGINEER MAR 20 2023	BY / ECT#	REV DATE

B
A
4 3 2 1

UNIT BASE AND DETAILS

NOTE(S):
1. SPLICE PLATE TO HOLD THE BUILD GROUP BASES TOGETHER. IF A LUG REQUIRED, IT WILL BE CENTERED ON THE SPLICE PLATE.

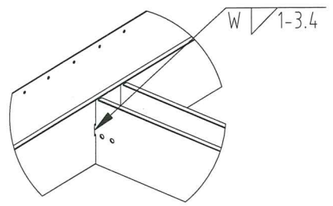

DETAIL P38

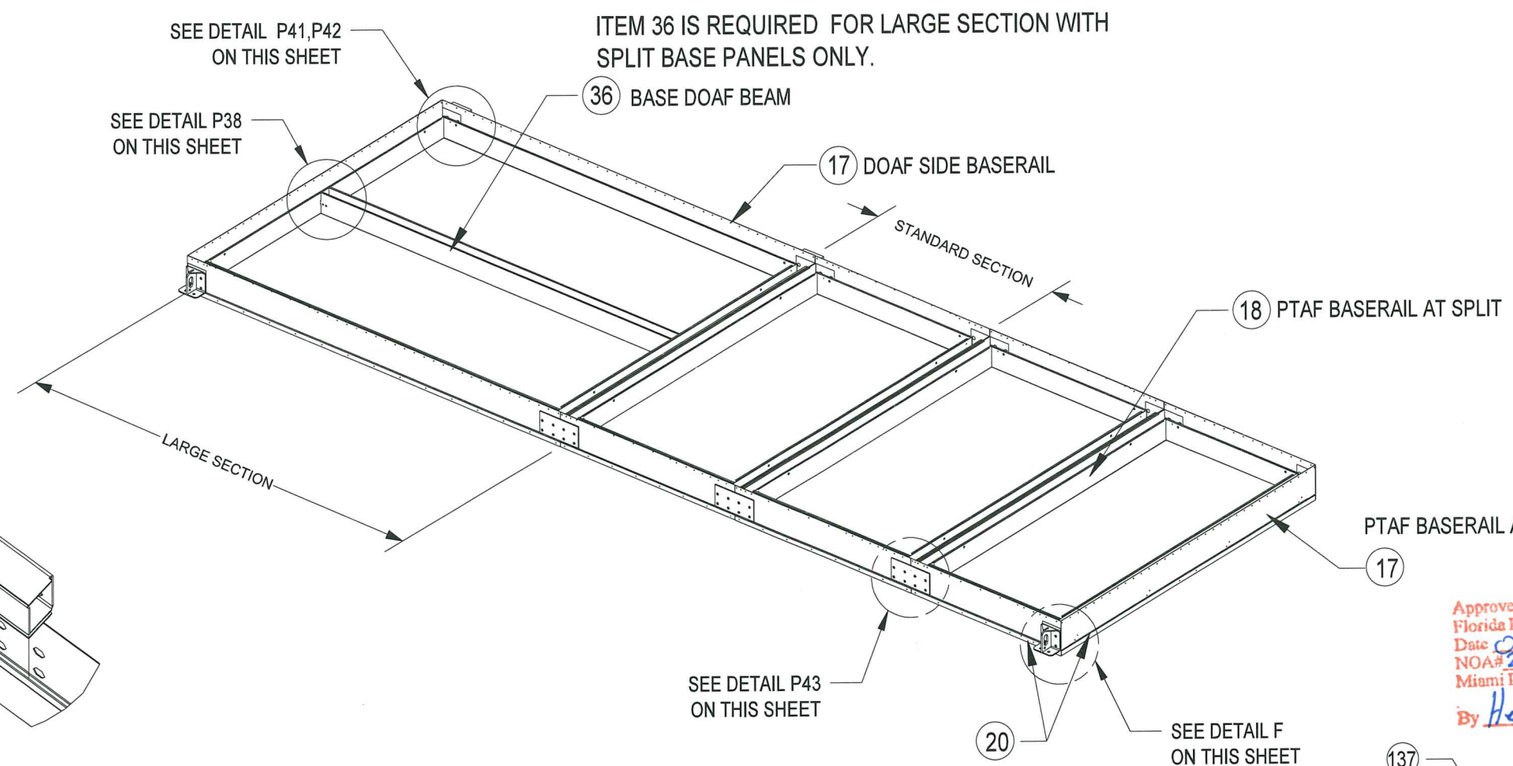

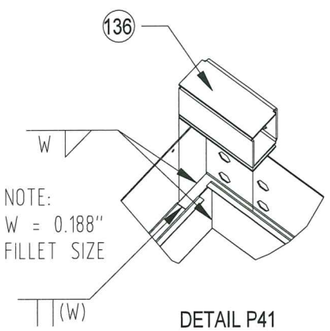

DETAIL P41

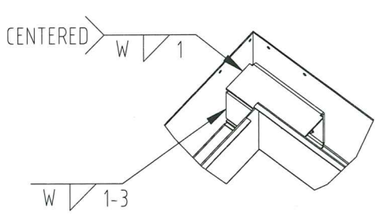

DETAIL P42

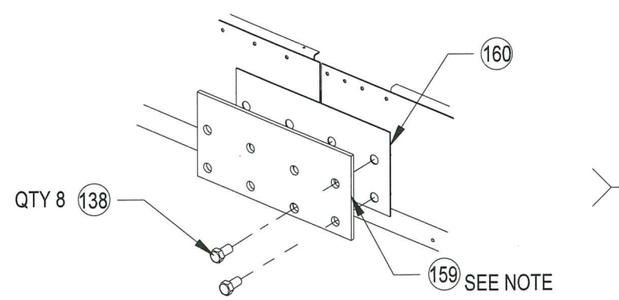

DETAIL P43

DETAIL P814

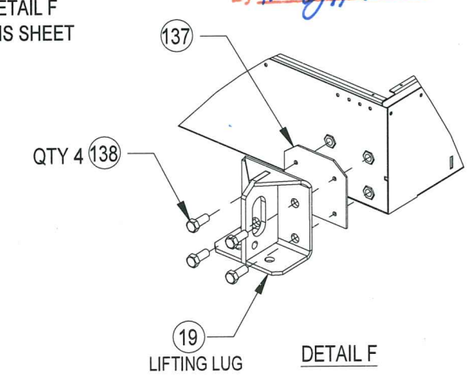

DETAIL F

Approved as complying with the Florida Building Code
Date 07/06/2023
NOA# 23-0411.03
Miami Dade Product Control
By

DRAWING # S65380496	DESC. TRANE PERFORMANCE CLIMATE CHANGER AIR HANDLER – HURRICANE UNIT	TRANE US Inc.	SCOTT WOLTERS FL PE# 62354 WOLTERS ENGINEERING (COA# 27184) 15211 97TH ROAD N WEST PALM BEACH, FL 33412 PH/FAX:(561) 225-1982 SEAL: SCOTT WOLTERS LICENSE No 62354 STATE OF FLORIDA PROFESSIONAL ENGINEER MAR 20 2023	REVISION HISTORY	REV.
SHEET 10 OF 40	SECTION			BY	ECT#	REV DATE

4 3 2 1

UNIT BASE AND DETAILS

NOTE(S):
1. BASE DOAF BEAM IS REQUIRED FOR LARGE SECTION WITH SPLIT BASE PANELS ONLY.
2. 3" LONG SCREWS ARE USED FOR SECTION WITH SPLIT BASE PANELS ONLY.
3. BASE RAIL ADHERE TO BASE PANEL WITH STRUCTURAL ADHESIVE.

MAXIMUM PANEL	WIDTH MAX.	LENGTH MAX.	AREA (SQFT)
BASE PANEL	93.106"	53.500"	34.591

UNIT SECTION G-G

BG LENGTH > 53"/BG WITH SPLIT ROOF

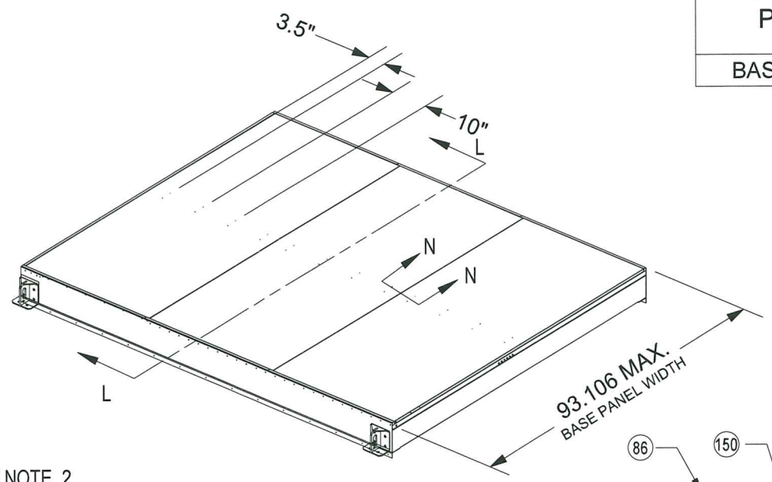

LARGE SECTION BASE CONSTRUCTION

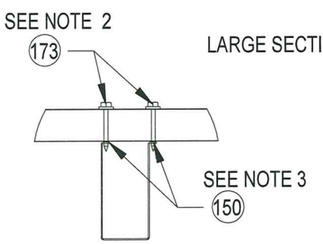

DETAIL P44

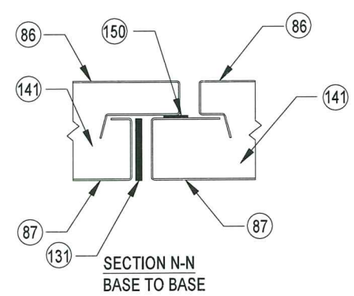

SECTION N-N
BASE TO BASE

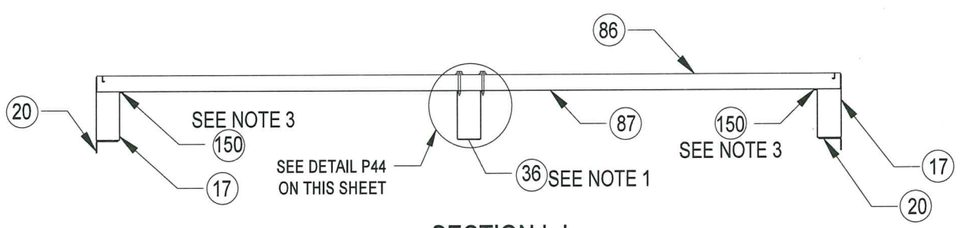

SECTION L-L

UNIT SECTION H-H

BG LENGTH <= 53"

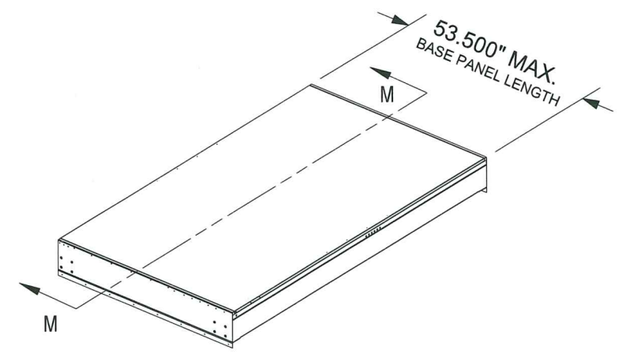

STANDARD SECTION BASE CONSTRUCTION

Approved as complying with the Florida Building Code
Date 07/06/2023
NOA# 23-0411.03
Miami Dade Product Control
By

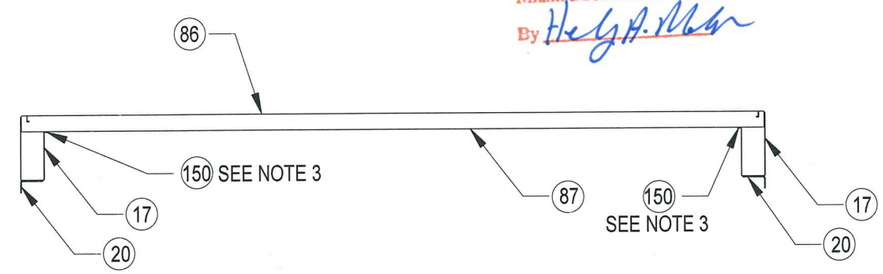

SECTION M-M

DRAWING # S65380496	DESC. TRANE PERFORMANCE CLIMATE CHANGER AIR HANDLER – HURRICANE UNIT	TRANE US Inc.	REVISION HISTORY	REV.
SHEET 11 OF 40	SECTION		BY	ECT# / REV DATE

SCOTT WOLTERS
FL PE# 62354
WOLTERS ENGINEERING
(COA# 27194)
15211 97TH ROAD N
WEST PALM BEACH, FL 33412
PH/FAX:(561) 225-1982

SCOTT WOLTERS LICENSE No 62354 STATE OF FLORIDA PROFESSIONAL ENGINEER
MAR 20 2023

UNIT SECTION - ROOF KEEL

UNIT SECTION G-G

BG LENGTH > 53"/BG WITH SPLIT ROOF

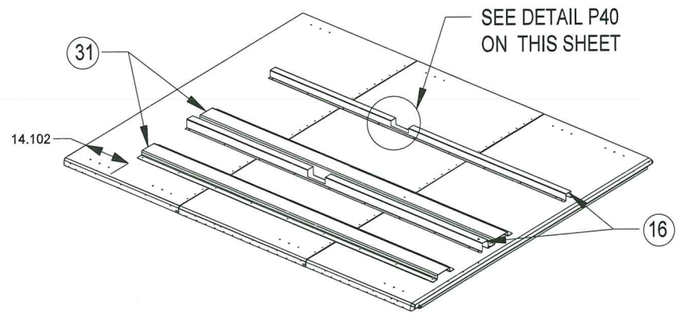

ROOF KEEL ON LARGE SECTION WITH MULTIPLE ROOFS

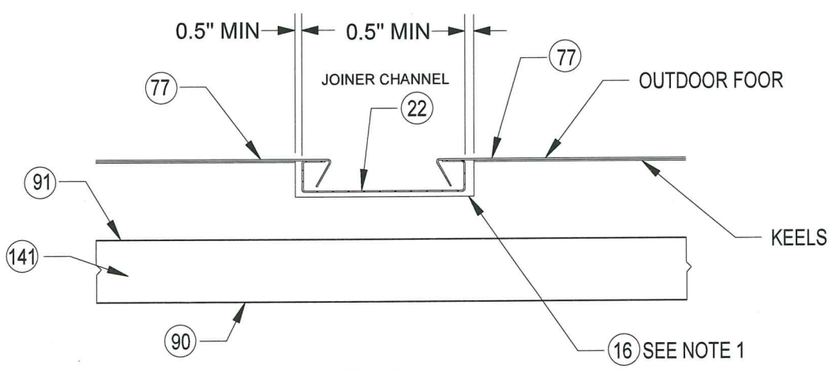

DETAIL P40

UNIT SECTION H-H

BG LENGTH <= 53"

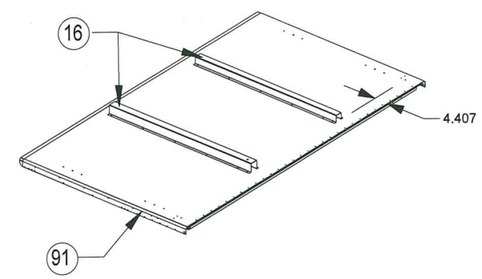

ROOF KEEL STANDARD SECTION WITH SINGLE ROOF

Approved as complying with the
Florida Building Code
Date 07/06/2023
NOA# 23-0411.03
Miami Dade Product Control
By

NOTE(S):
1. THE OUTDOOR ROOF KEELS ARE NOTCHED TO CLEAR THE OUTDOOR ROOF JOINER CHANNEL
2. NEED 4" AT LEAST CLEARANCE FROM THE SHIPPING SPLIT TO KEEL/HAT CHANNEL.
3. 14" CLEARANCE FROM END OF UNIT TO KEELS.

DRAWING # S65380496	DESC. TRANE PERFORMANCE CLIMATE CHANGER AIR HANDLER – HURRICANE UNIT	TRANE US Inc.	SCOTT WOLTERS FL PE# 62354 WOLTERS ENGINEERING (COA# 27194) 15211 97TH ROAD N WEST PALM BEACH, FL 33412 PH/FAX: (561) 225-1982 SEAL: SCOTT WOLTERS LICENSE No 62354 STATE OF FLORIDA PROFESSIONAL ENGINEER MAR 20 2023	REVISION HISTORY	REV.
SHEET 12 OF 40	SECTION			BY / ECT#	REV DATE

4 3 2 1

STANDARD WALL PANEL AND STANDARD DOOR

INNER SKIN SCREWS DETAILS

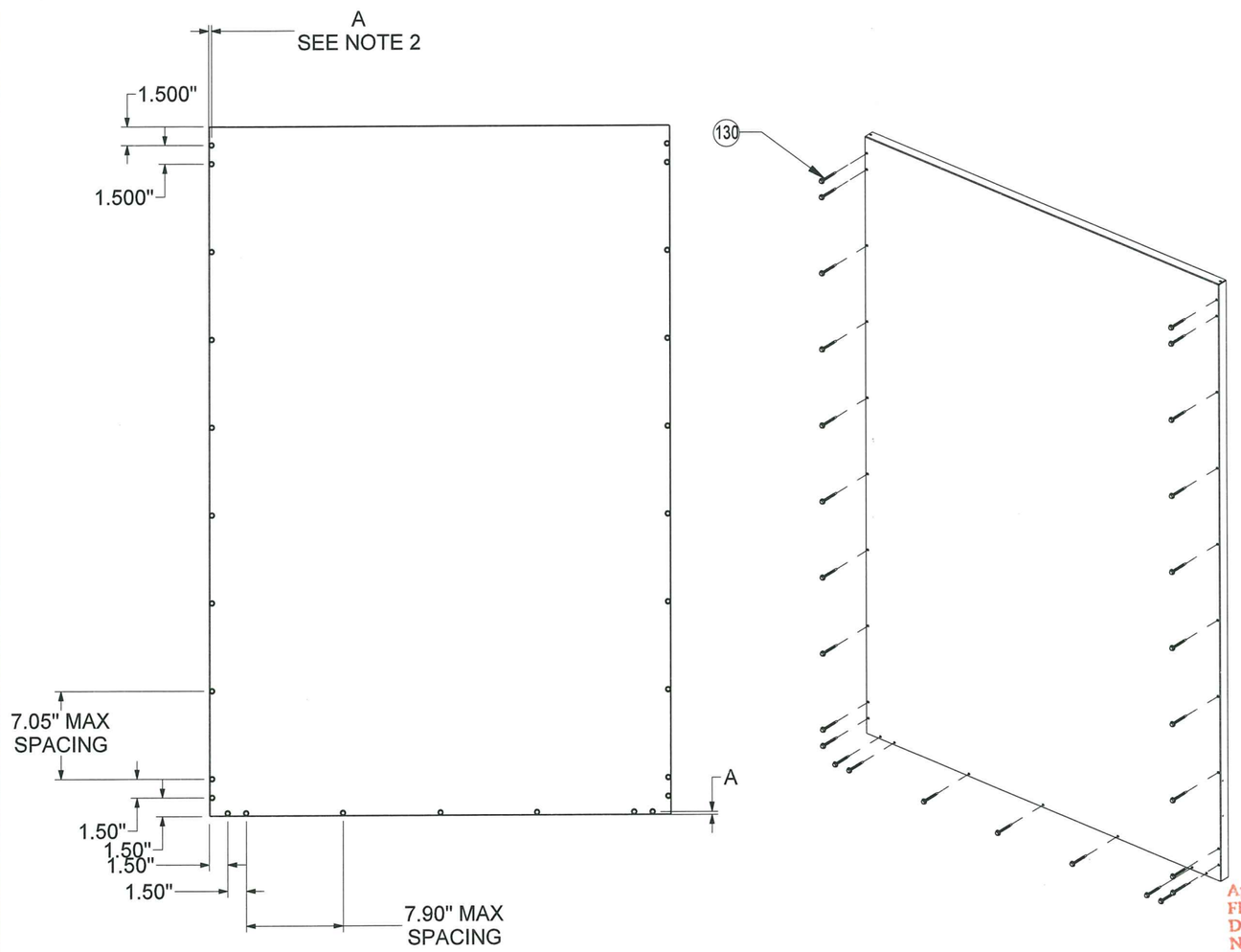

NOTE(S):

1. NO SCREWS ON THE TONGUE SIDE OF THE PANEL.
2. DIM A CAN BE 0.300", 0.450", 0.993", 0.288 AND 0.300" IN BELOW PROFILES. TONGUE PROFILE AND EOU CORNER DOES NOT APPLY WITH LONG SCREW.
3. FOR STANDARD DOOR BOTTOM SCREW PATTERN APPLIES TO TOP AS WELL.
4. THIS SHEET SHALL BE APPLICABLE TO ALL DOORS IN UNIT AND PIPE CABINET.

WALL PANEL AND STANDARD DOOR PROFILES WITH LONG SCREW

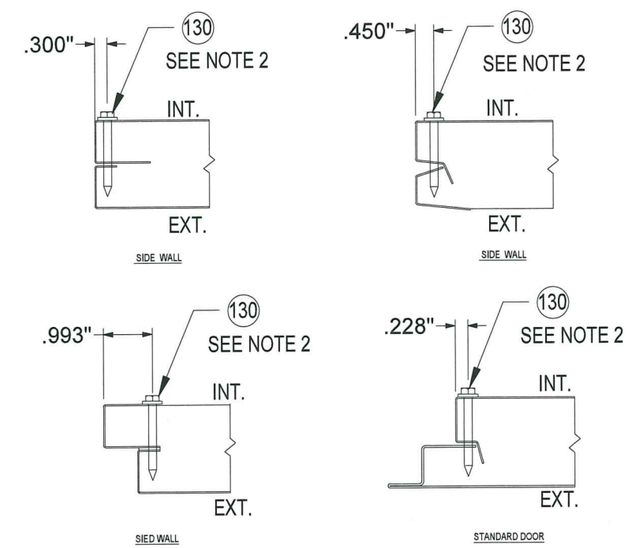

WALL PANEL AND STANDARD DOOR PROFILES WITHOUT LONG SCREW

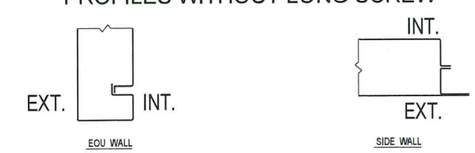

NARROW DOOR JAMB PROFILES

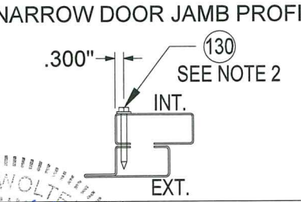

Approved as complying with the Florida Building Code
Date 07/06/2023
NOA# 23-0411.03
Miami Dade Product Control
By

DRAWING # S65380496	DESC. TRANE PERFORMANCE CLIMATE CHANGER AIR HANDLER – HURRICANE UNIT	TRANE US Inc.	SCOTT WOLTERS, FL PE# 62354 — WOLTERS ENGINEERING (COA# 27194) 15211 60TH ROAD N WEST PALM BEACH, FL 33412 PH/FAX: (561) 225-1982 — SEAL: SCOTT WOLTERS, STATE OF FLORIDA, PROFESSIONAL ENGINEER, 62354 — MAR 20 2023	REVISION HISTORY	REV.
SHEET 13 OF 40	SECTION			BY / ECT#	REV DATE

4 3 2 1

STANDARD DOOR SECTION E-E

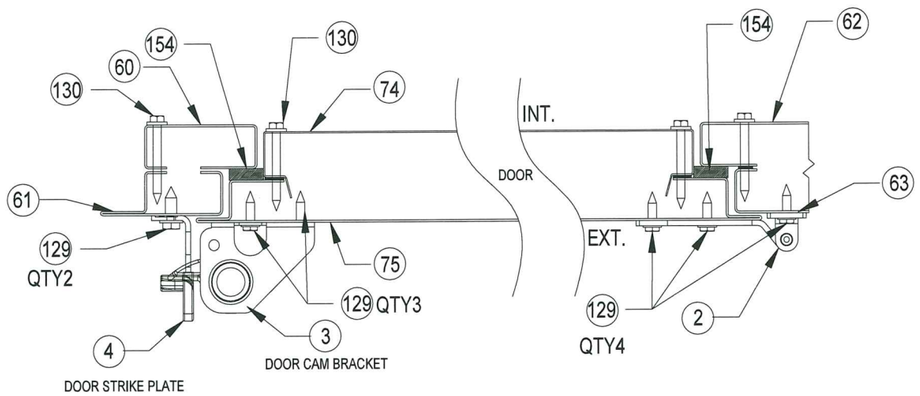

NOTE(S):
1. THIS DETAILS SHALL BE APPLICABLE TO ALL DOORS IN UNIT AND PIPE CABINET.

PIPE CABINET STANDARD DOOR SECTION A-A

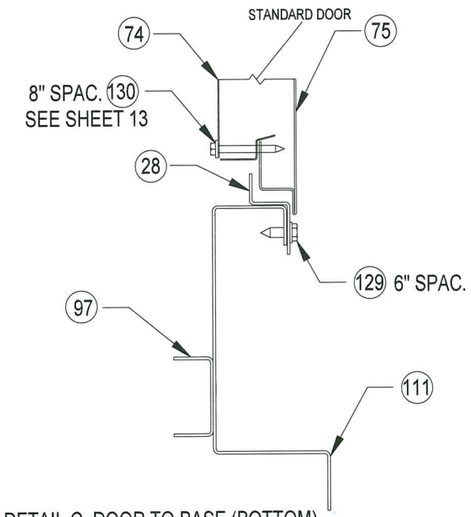

DETAIL C. DOOR TO BASE (BOTTOM)

NOTE(S):
1. THIS DETAILS SHALL BE ONLY APPLICABLE TO PIPE CABINET.

STANDARD DOOR SECTION A-A

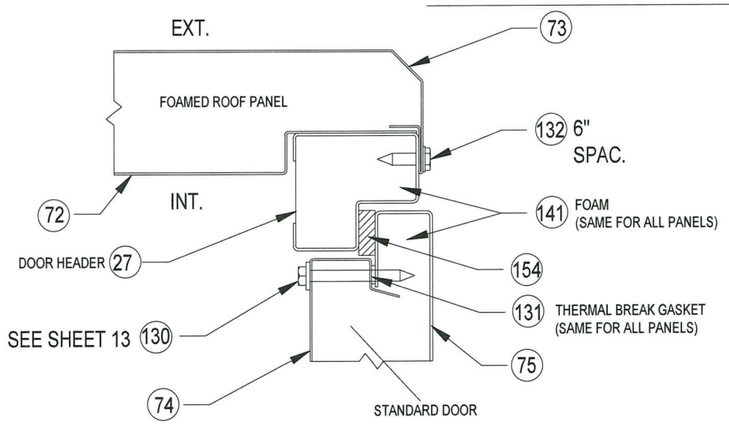

DETAIL B. DOOR TO ROOF (TOP)

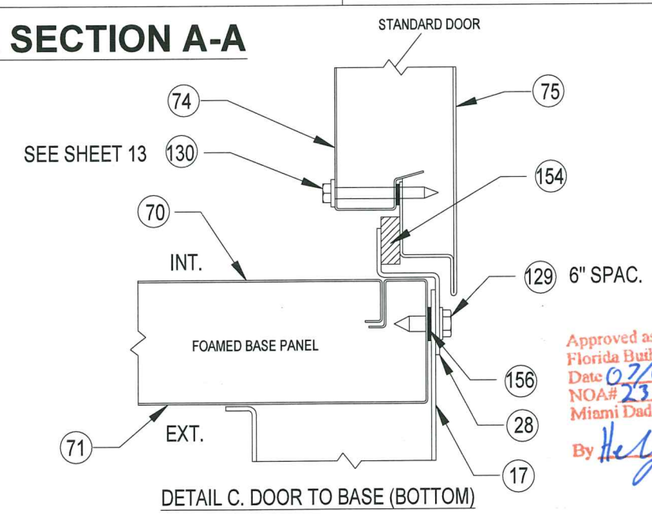

DETAIL C. DOOR TO BASE (BOTTOM)

Approved as complying with the Florida Building Code
Date 07/06/2023
NOA# 23-0411.03
Miami Dade Product Control
By

NOTE(S):
1. ONLY SHOWING TOP AND BOTTOM OF THE CROSS SECTION.
2. DETAIL B SHALL BE APPLICABLE TO ALL DOORS IN UNIT AND PIPE CABINET.

STANDARD DOOR SECTION B-B

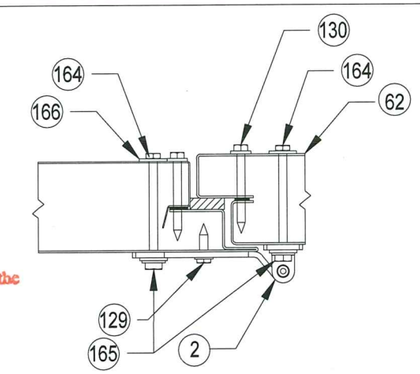

SPECIAL HARDWARE APPLICABLE TO TOP AND BOTTOM HINGES ONLY

NOTE(S):
1. THIS DETAILS SHALL BE APPLICABLE TO ALL DOORS IN UNIT AND PIPE CABINET.

DRAWING # S65380496	DESC. TRANE PERFORMANCE CLIMATE CHANGER AIR HANDLER – HURRICANE UNIT	TRANE US Inc.	SCOTT WOLTERS FL PE# 62354 WOLTERS ENGINEERING (COA# 27192) 15211 97TH ROAD N WEST PALM BEACH, FL 33412 PH/FAX: (561) 225-1962 SEAL: LICENSED PROFESSIONAL ENGINEER No. 62354 STATE OF FLORIDA	REVISION HISTORY	REV.
SHEET 14 OF 40	SECTION			BY / ECT#	REV DATE

STATE OF FLORIDA PROFESSIONAL ENGINEER
MAR 20 2023

STANDARD DOOR HARDWARE LAYOUT

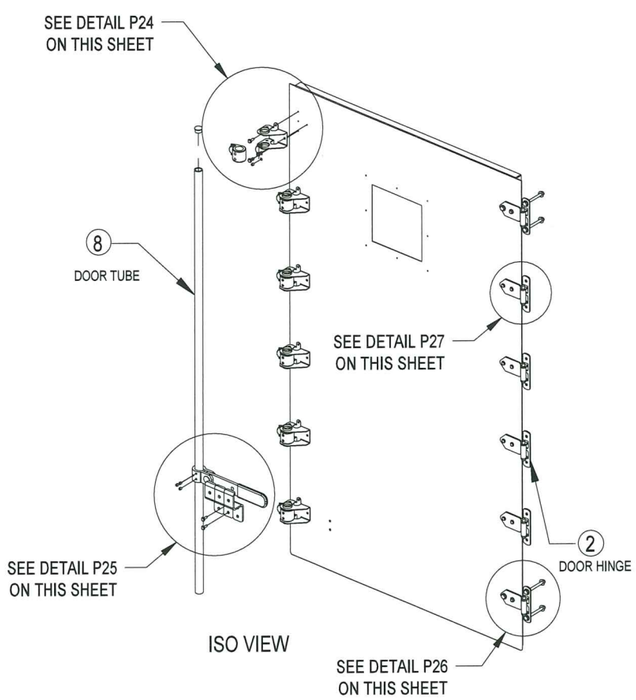

ISO VIEW

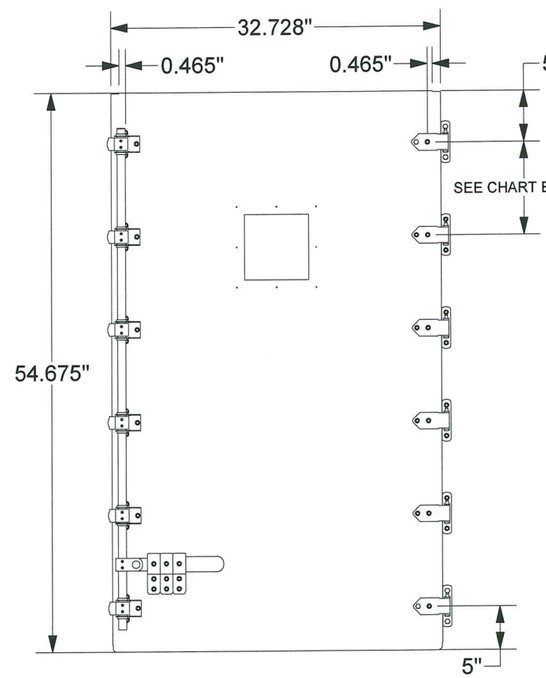

FRONT VIEW

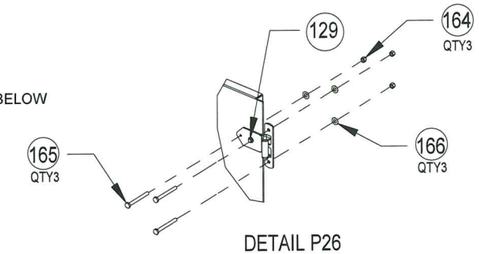

DETAIL P26

TOP AND BOTTOM HINGE ONLY

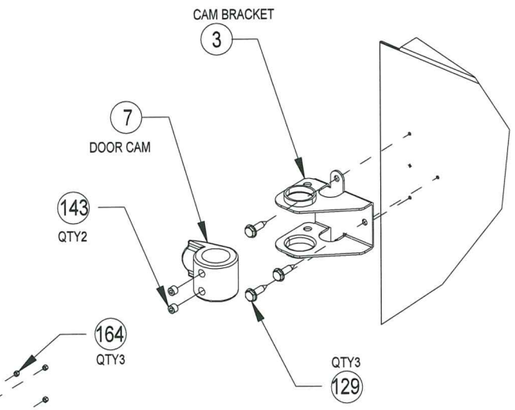

DETAIL P24

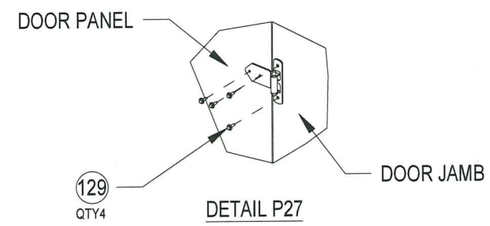

DETAIL P27

ALL MIDDLE HINGES

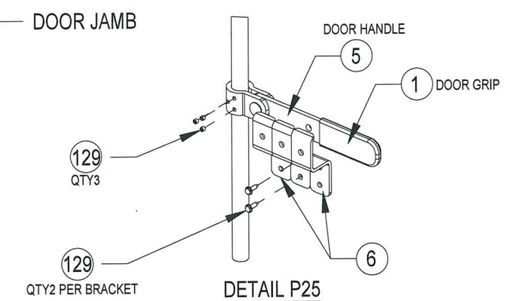

DETAIL P25

Approved as complying with the
Florida Building Code
Date 07/06/2023
NOA# 23-0411.03
Miami Dade Product Control
By

MAXIMUM DOOR SIZE WIDTH X HEIGHT	HINGE AND CAM/STRIKE SPACING	PADLOCK BRACKETS PER HANDLE	HANDLE QTY (PED DOOR)
32 8/11" X 54 27/40"	9"	3	1

NOTE(S):
1. TOP AND BOTTOM HINGES ONLY WITH NUT AND BOLTS. SEE DETAILS P26.
2. HINGES WITH STANDARD HARDWARE. SEE DETAILS P27.
3. THIS DETAILS SHALL BE APPLICABLE TO ALL DOORS IN UNIT AND PIPE CABINET.

DRAWING # S65380496	DESC. TRANE PERFORMANCE CLIMATE CHANGER AIR HANDLER – HURRICANE UNIT	TRANE US Inc.	SCOTT WOLTERS FL PE# 62354 WOLTERS ENGINEERING (COA# 27194) 15211 97TH ROAD N WEST PALM BEACH, FL 33412 PH/FAX:(561) 225-1962	REVISION HISTORY	REV.
SHEET 15 OF 40	SECTION		SEAL: SCOTT WOLTERS LICENSE No 62354 STATE OF FLORIDA PROFESSIONAL ENGINEER MAR 20 2023	BY / ECT#	REV DATE

4 3 2 1

PREMIUM DOOR SECTION D-D

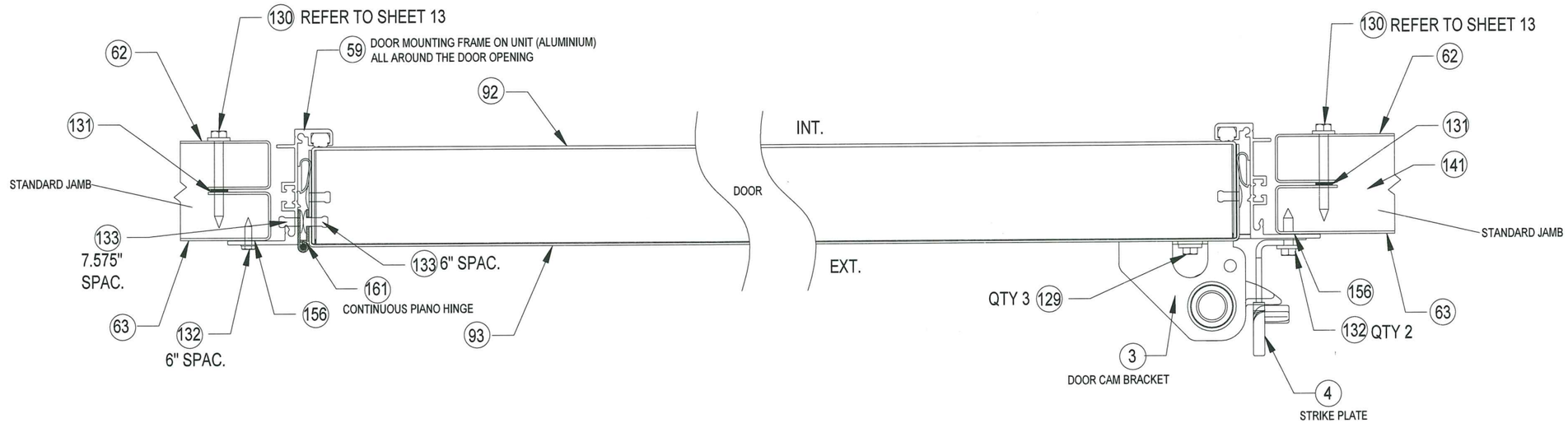

PREMIUM DOOR SECTION C-C

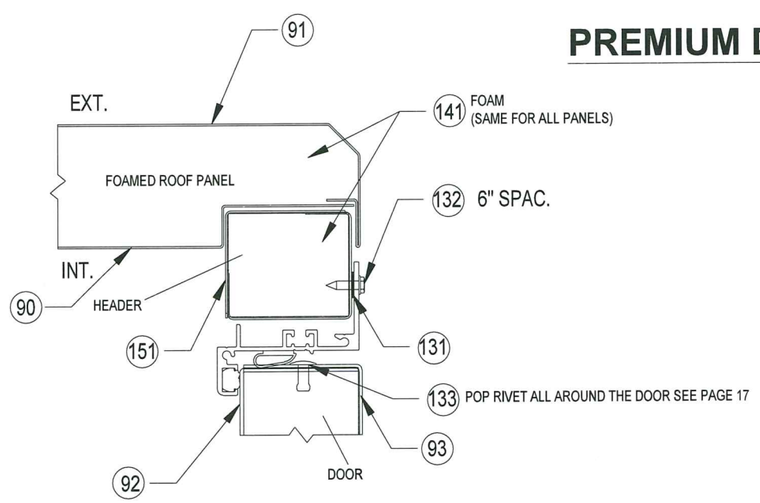

DETAIL D. DOOR TO ROOF (TOP)

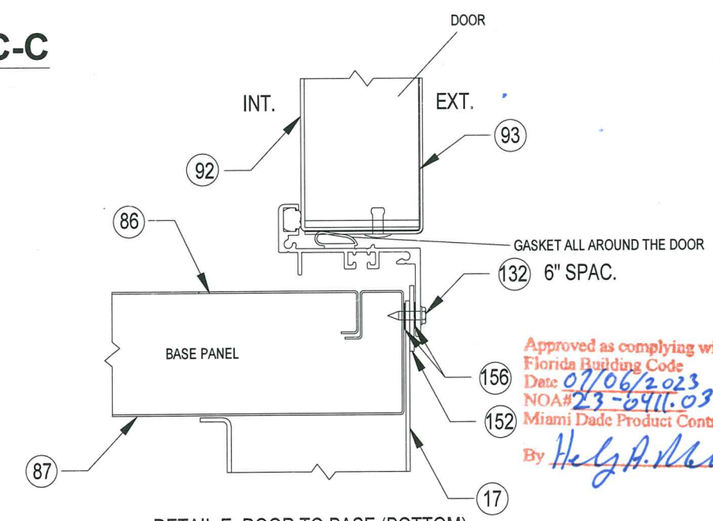

DETAIL E. DOOR TO BASE (BOTTOM)

Approved as complying with the Florida Building Code
Date 07/06/2023
NOA# 23-0411.03
Miami Dade Product Control
By Holly A. Alder

NOTE(S):
1. ONLY SHOWING TOP AND BOTTOM OF THE CROSS SECTION.

DRAWING # S65380496	DESC. TRANE PERFORMANCE CLIMATE CHANGER AIR HANDLER – HURRICANE UNIT	TRANE US Inc.	SCOTT WOLTERS FL PE# 62354 WOLTERS ENGINEERING (COA# 27194) 15211 97TH ROAD N WEST PALM BEACH, FL 33412 PH/FAX:(561) 225-1982 SEAL: No 62354 STATE OF FLORIDA PROFESSIONAL ENGINEER MAR 20 2023	REVISION HISTORY	REV.
SHEET 16 OF 40	SECTION			BY	ECT# / REV DATE

4 3 2 1

PREMIUM DOOR HARDWARE LAYOUT

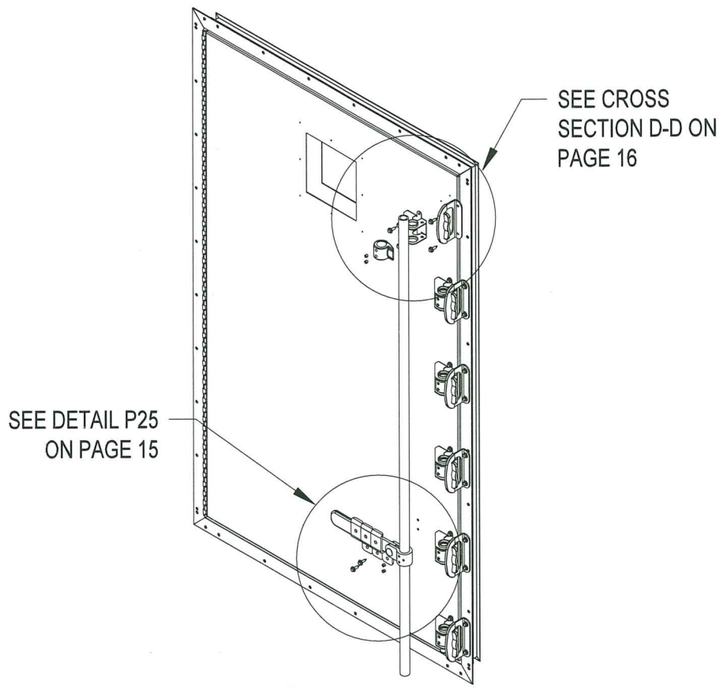

ISO VIEW

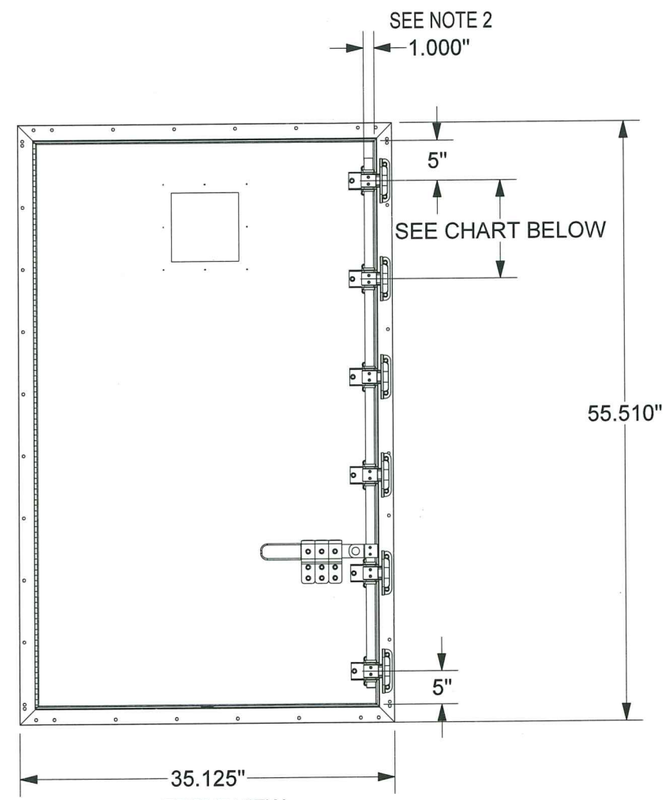

FRONT VIEW

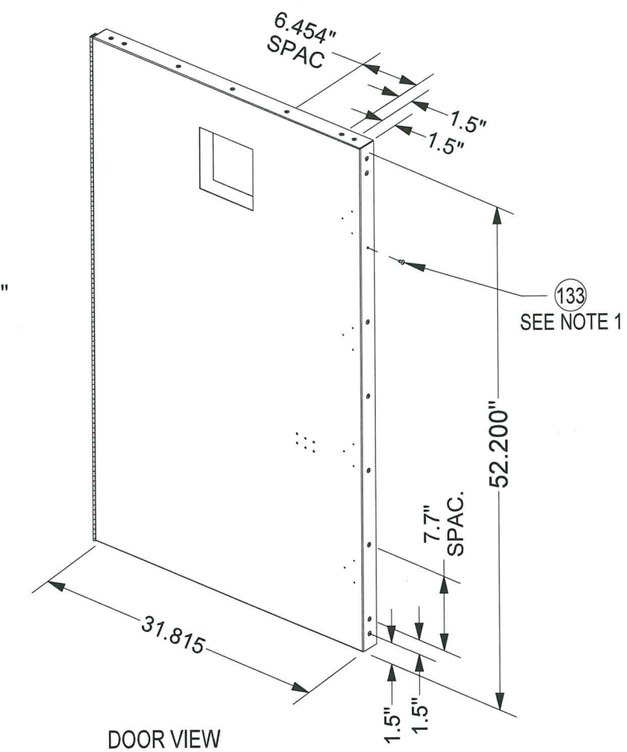

DOOR VIEW
(INCLUDE INNER AND OUTER SKIN)

MAXIMUM DOOR SIZE WIDTH X HEIGHT	CAM/ STRIKE SPACING	PADLOCK BRACKETS PER HANDLE	HANDLE QTY (PER DOOR)
31 22/27" X 52 1/5"	9.081"	3	1

NOTE(S):
1. POP RIVETING INNER SKIN TO THE OUTER SKIN OF THE DOOR. LARGE POP RIVET IS REQUIRED ALL AROUND THE DOOR.
2. 1.000" IS FROM SIDE FLAT EDGE TO THE CENTER OF THE HOLE.

Approved as complying with the Florida Building Code
Date 01/06/2023
NOA# 23-0411.03
Miami Dade Product Control
By Hely A. Mar

SCOTT WOLTERS, PE
FL PE# 62354
WOLTERS ENGINEERING
(COA# 27194)
15211 97TH ROAD N
WEST PALM BEACH, FL 33412
PH/FAX:(561) 225-1982
SEAL
STATE OF FLORIDA
MAR 20 2023
PROFESSIONAL ENGINEER

DRAWING # S65380496	DESC. TRANE PERFORMANCE CLIMATE CHANGER AIR HANDLER – HURRICANE UNIT	TRANE US Inc.	REVISION HISTORY	REV.
SHEET 17 OF 40 / SECTION			BY / ECT#	REV DATE

DOOR COMPONENT PART

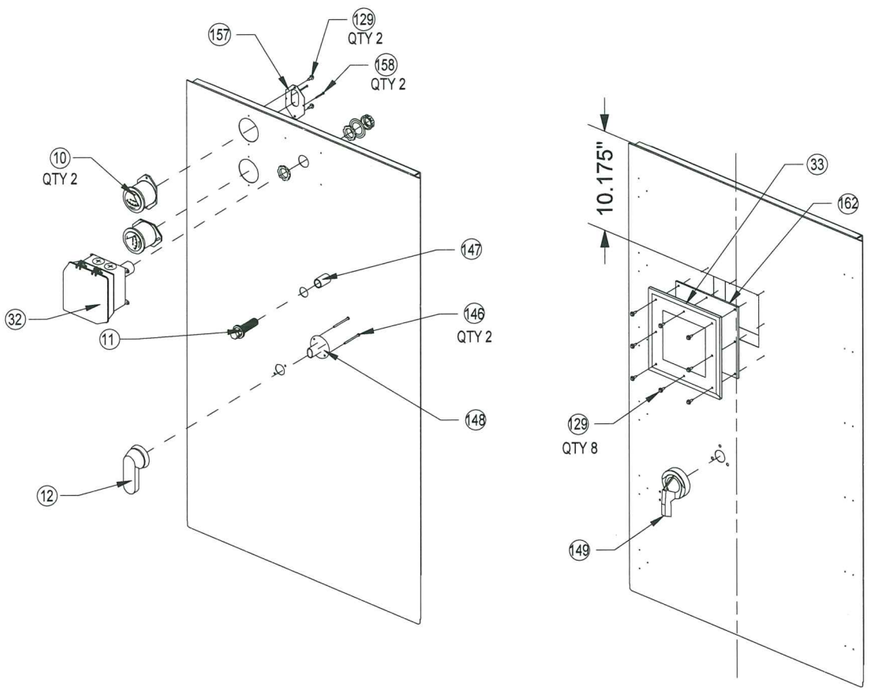

WALL COMPONENT PART

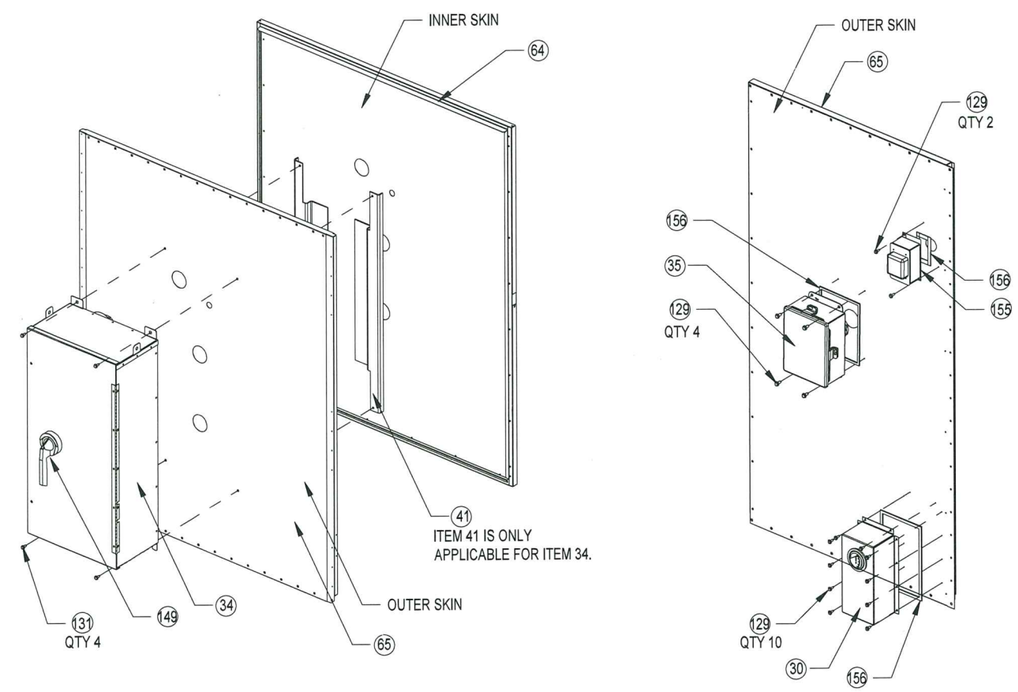

Approved as complying with the
Florida Building Code
Date 07/06/2023
NOA# 23-0411.03
Miami Dade Product Control
By

DRAWING # S65380496	DESC. TRANE PERFORMANCE CLIMATE CHANGER AIR HANDLER – HURRICANE UNIT	TRANE US Inc.	SCOTT WOLTERS FL PE# 62354 WOLTERS ENGINEERING (COA# 27494) 15211 97TH ROAD N WEST PALM BEACH, FL 33412 PH/FAX:(561) 225-1982 SEAL SCOTT WOLTERS LICENSE No 62354 STATE OF FLORIDA PROFESSIONAL ENGINEER MAR 20 2023	REVISION HISTORY	REV.
SHEET 18 OF 40	SECTION			BY / ECT#	REV DATE

B

A

4 3 2 1

WALL STRUCTURE DETAILS AND PLACEMENT

NOTE(S):
1. ITEM 14 IS ONLY PLACED ADJACENT TO DOORS WITH STD JAMB.
2. ITEM 14 IS SPACED AT 66 15/16" FROM SHIPPING SPLIT OR EOU WHEN THERE IS NO DOORS AND THERE IS NO COMPONENT INTERFACING TO THE SIDE WALL.

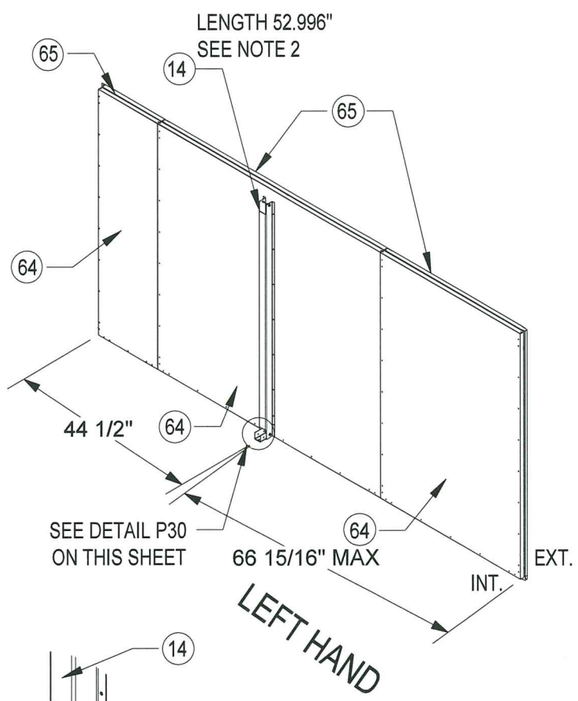

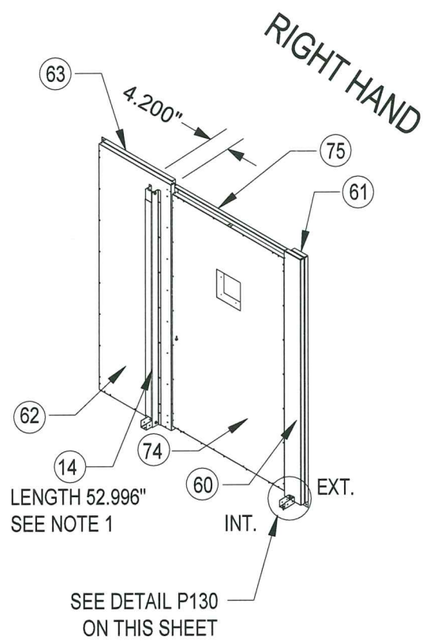

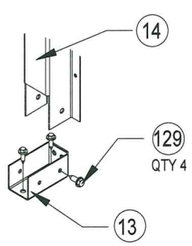

DETAIL P30. HAT CHANNEL TO BRACKET

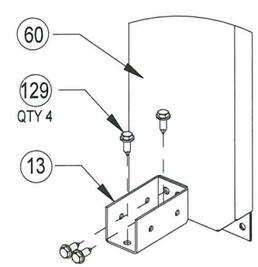

DETAIL P130. BRACKET TO NARROW DOOR JAMB

OPENING DETAILS ON FRONT

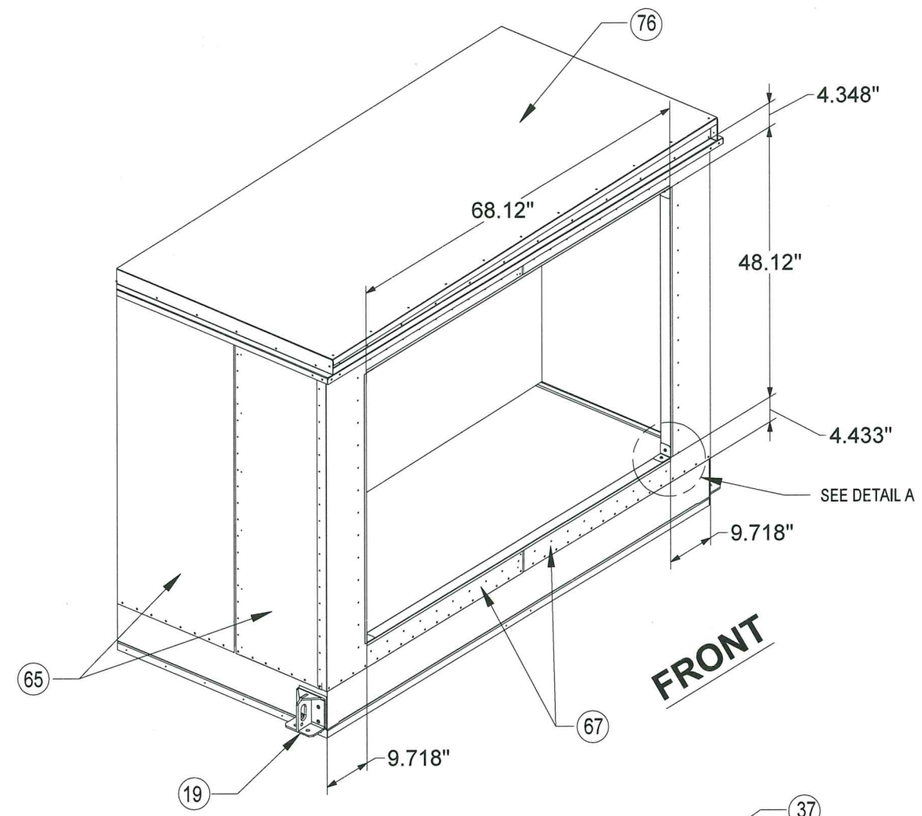

Approved as complying with the Florida Building Code
Date 07/06/2023
NOA# 23-0411.03
Miami Dade Product Control
By

FOAM COVER AND CORNER BRACKET TYPICAL FOR ALL CUT OPENINGS IN PANELS. ITEM 39 MAY NOT BE USED FOR PLUG PANELS OR WINDOW OPENINGS.

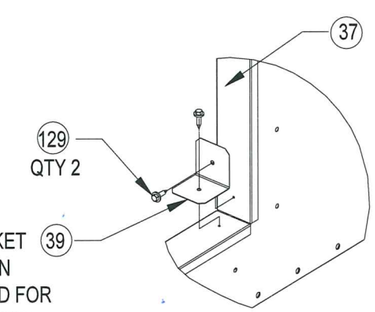

DETAIL A

DRAWING # S65380496	DESC. TRANE PERFORMANCE CLIMATE CHANGER AIR HANDLER – HURRICANE UNIT	TRANE US Inc.	SCOTT WOLTERS FL PE# 62354 WOLTERS ENGINEERING (COA# 27194) 16211 97TH ROAD NORTH WEST PALM BEACH, FL 33412 PH/FAX: (561) 225-1982	REVISION HISTORY	REV.
SHEET 19 OF 40	SECTION		SEAL: SCOTT WOLTERS LICENSE NO 62354 STATE OF FLORIDA PROFESSIONAL ENGINEER MAR 20 2023	BY / ECT#	REV DATE

4 3 2 1

SHIPPING SPLIT CONSTRUCTION

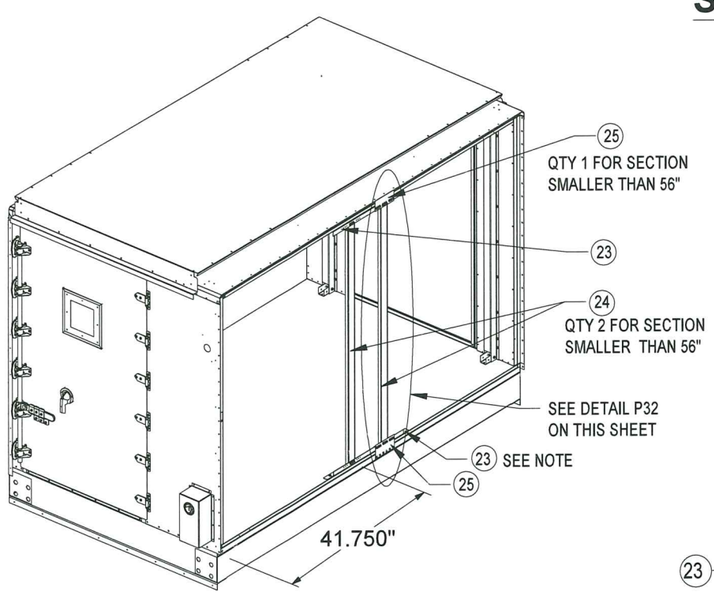

STANDARD BUILD GROUP SECTION

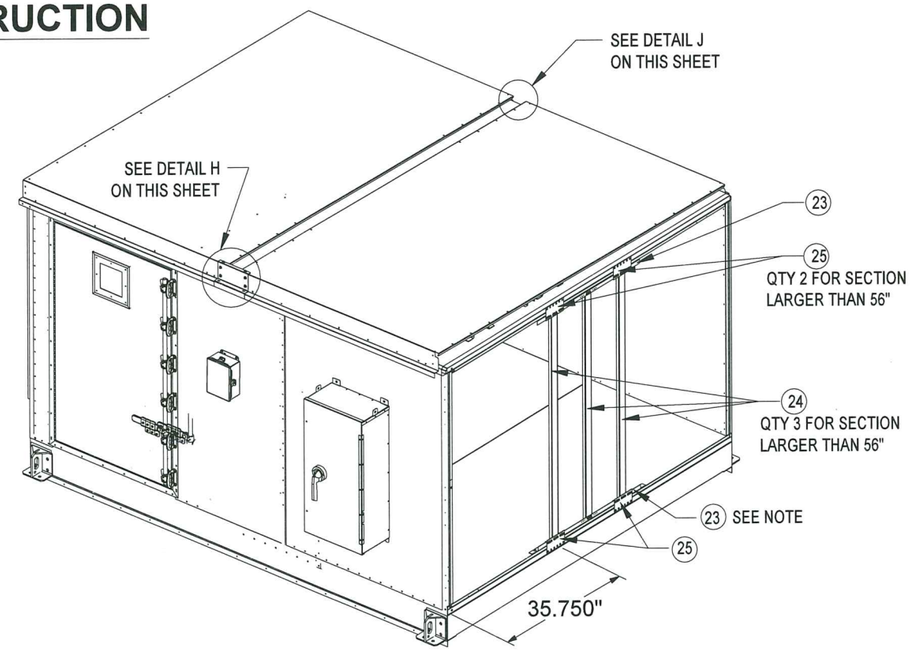

LARGE BUILD GROUP SECTION

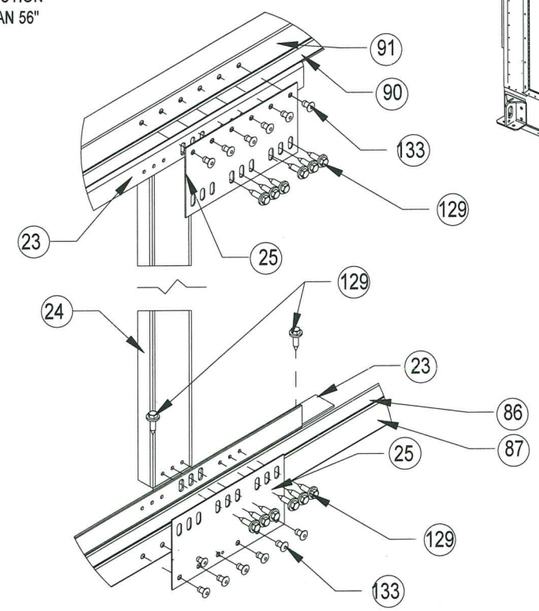

DETAIL P32

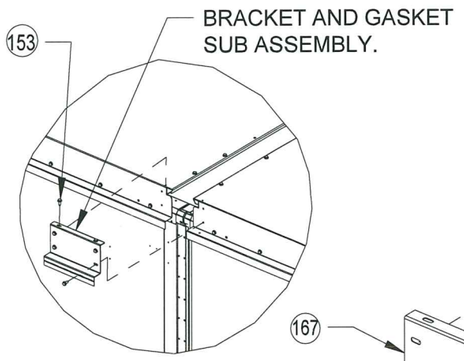

DETAIL H

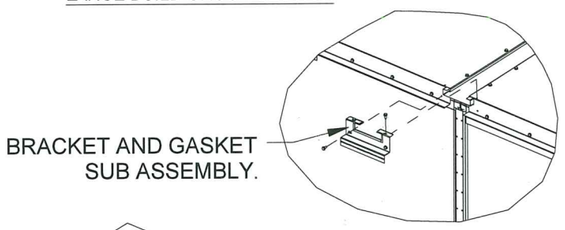

DETAIL J

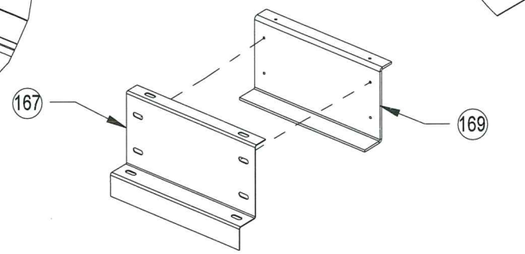

SUPPORT BRACKET & GASKET (TALL)

NOTE(S):
1. NEED 3 SUPPORTS AND 4 SPLICE PLATES WHEN BG LENGTH >=56"(LARGE BUILD GROUP), NEED 2 SUPPORTS AND 2 SPLICE PLATES WHEN BG LENGTH <56"(STANDARD BUILD GROUP)

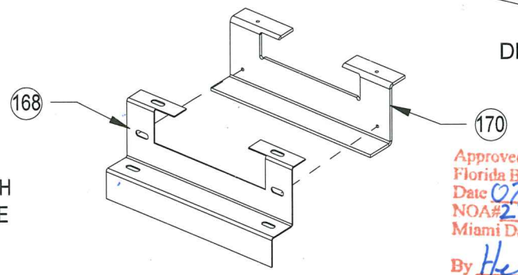

SUPPORT BRACKET & GASKET (SHORT)

Approved as complying with the Florida Building Code
Date 07/06/2023
NOA# 23-0411.03
Miami Dade Product Control
By

DRAWING # S65380496	DESC. TRANE PERFORMANCE CLIMATE CHANGER AIR HANDLER – HURRICANE UNIT	TRANE US Inc.	SCOTT WOLTERS FL REG# 62354 WOLTERS ENGINEERING (COA# 27294) 15211 97TH ROAD N WEST PALM BEACH, FL 33412 PH/FAX:(561) 225-1982 SEAL: SCOTT WOLTERS LICENSE No 62354 STATE OF FLORIDA PROFESSIONAL ENGINEER MAR 20 2023	REVISION HISTORY	REV.
SHEET 20 OF 40 / SECTION				BY / ECT#	REV DATE

4 3 2 1

HOOD ASSEMBLY DETAILS

NOTE(S):
1. ALL SKIN PANELS ARE ADHERED TO FRAME WORK USING STRUCTURAL ADHESIVE.
2. IF HOOD HEIGHT > 25.194", L= HOOD HEIGHT - 1 - .224 - 2, ELSE L = (HOOD HEIGHT - 1 - .224) /2.

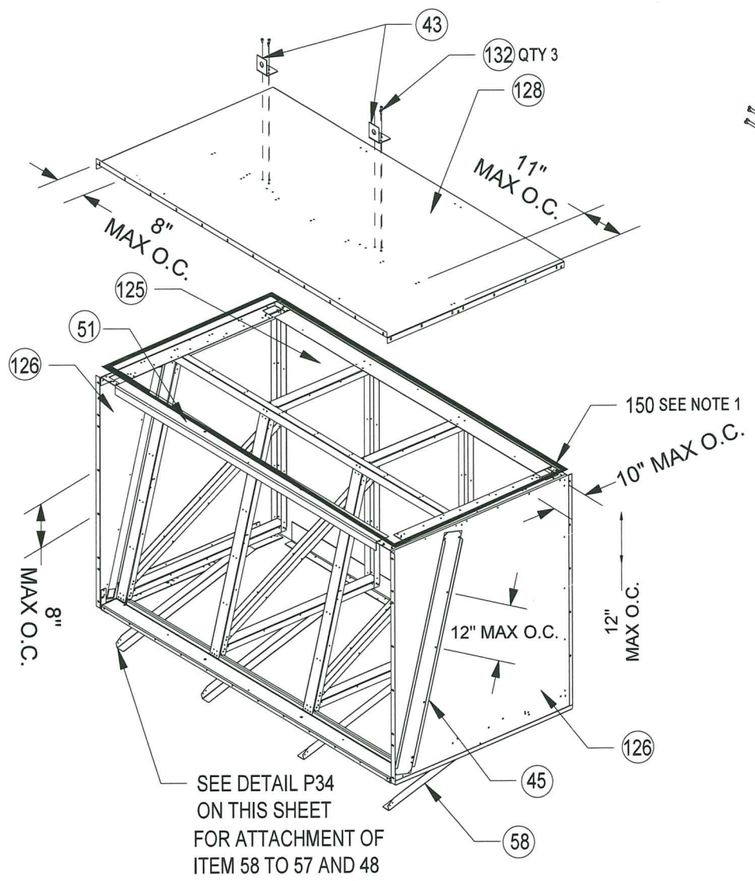

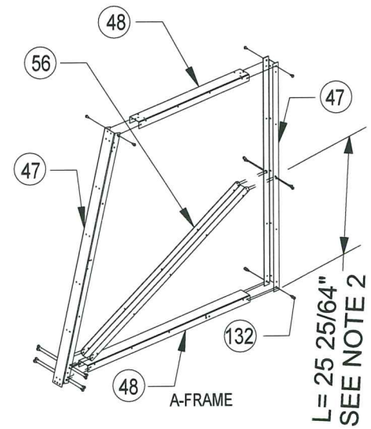

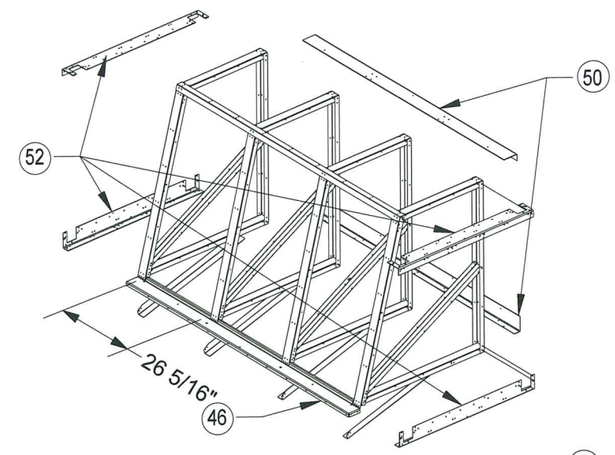

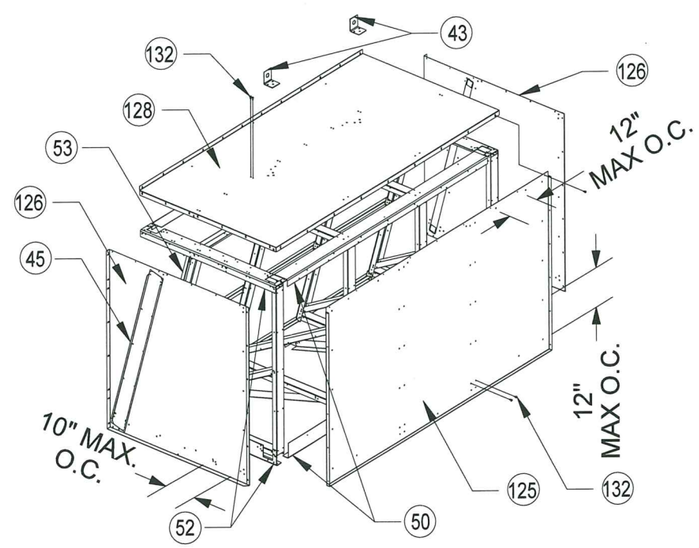

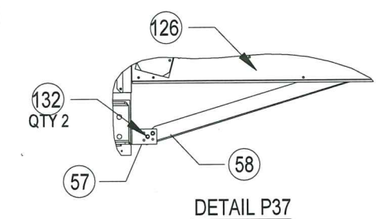

DETAIL P37
FRONT/BACK HOODS ONLY

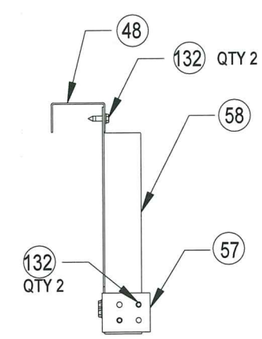

DETAIL P34

Approved as complying with the Florida Building Code
Date 02/06/2023
NOA# 23-0411.03
Miami Dade Product Control
By

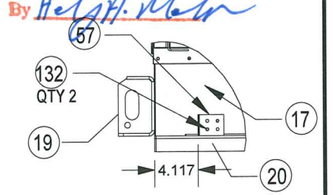

DETAIL P35

DRAWING # S65380496	DESC. TRANE PERFORMANCE CLIMATE CHANGER AIR HANDLER – HURRICANE UNIT	TRANE US Inc.	REVISION HISTORY	REV.
SHEET 21 OF 40 / SECTION			ECT#	REV DATE

SCOTT WOLTERS
LICENSE
FL PE# 62354
WOLTERS ENGINEERING
(COA# 27194)
15211 97TH ROAD N
WEST PALM BEACH, FL 33412
PH/FAX:(561) 225-1982
SCOTT WOLTERS LICENSE No 62354 STATE OF FLORIDA PROFESSIONAL ENGINEER
MAR 20 2023

LOUVER ASSEMBLY DETAILS

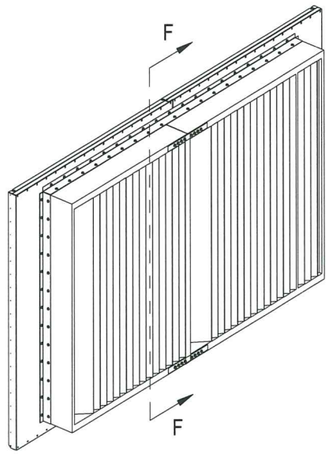

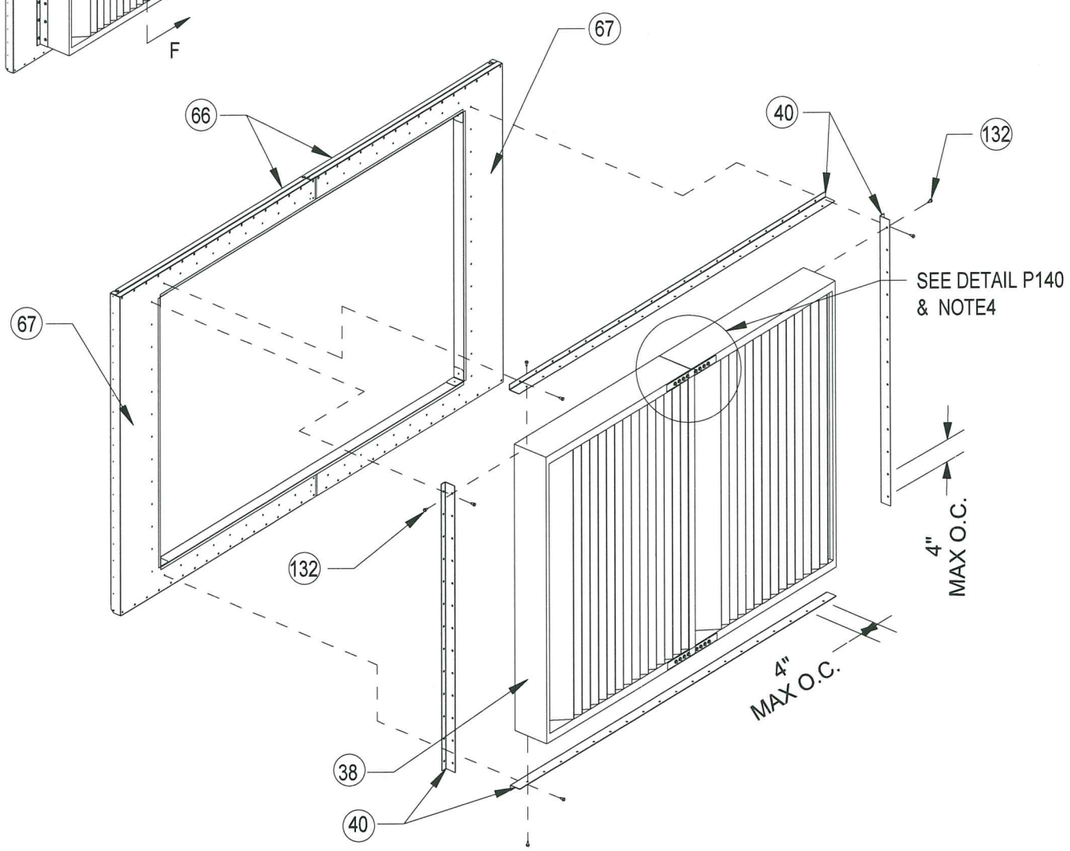

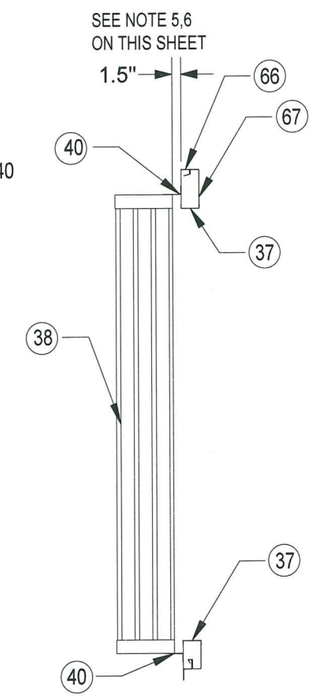

SECTION F-F

NOTE(S):

1. LOUVER IS NOA CERTIFIED FOR ABOVE 100 PSF AND IMPACTED AT 80 PSF. (ONLY ATTACHMENT IS BEING EVALUATED).
2. LOUVER FRAME
   6"(152) DEEP, 6063T6 EXTRUDED ALUMINUM WITH .095"(2.4) NOMINAL WALL THICKNESS.
3. LOUVER BLADES
   6063T6 EXTRUDED ALUMINUM 0.080 (2.0) NOMINAL WALL THICKNESS.
4. IF LOUVER IS SPLIT, USE 18 GAUGE MIN THICK STRAP ON TOP AND BOTTOM TO JOINT LOUVERS AS SHOWN, THIS IS IN ADDITION TO WHAT IS RECOMMENDED BY LOUVER NOA.
5. LOUVER PLACES 1.5" AWAY FROM THE WALL TO CLEAR THE DAMPER BLADES.
6. WATER MANAGEMENT SEALTS SUCH AS CAULKS AND OTHERS CAN BE USED AS LONG AS IT DOES NOT CHANGE THE HARDWARE DETAILS AND SPACING.

Approved as complying with the
Florida Building Code
Date 07/06/2023
NOA# 23-0411.03
Miami Dade Product Control
By

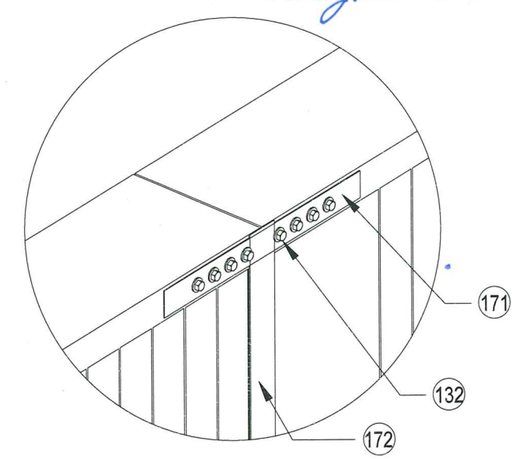

DETAIL P140

DRAWING # S65380496	DESC. TRANE PERFORMANCE CLIMATE CHANGER AIR HANDLER – HURRICANE UNIT	TRANE US Inc.	SCOTT WOLTERS P.E. LICENSE NO. 62354 WOLTERS ENGINEERING (COA# 27194) 5211 97TH ROAD N WEST PALM BEACH, FL 33412 PH/FAX:(561) 225-1982	REVISION HISTORY	REV.
SHEET 22 OF 40	SECTION			BY / ECT#	REV DATE

SCOTT WOLTERS STATE OF FLORIDA PROFESSIONAL ENGINEER
MAR 20 2023

OPTIONAL PIPE CABINET

GENERIC FOAM PANEL CROSS SECTION DETAILS

CROSS SECTION	REFERENCE PAGE
A-A	14
B-B	14
E-E	14

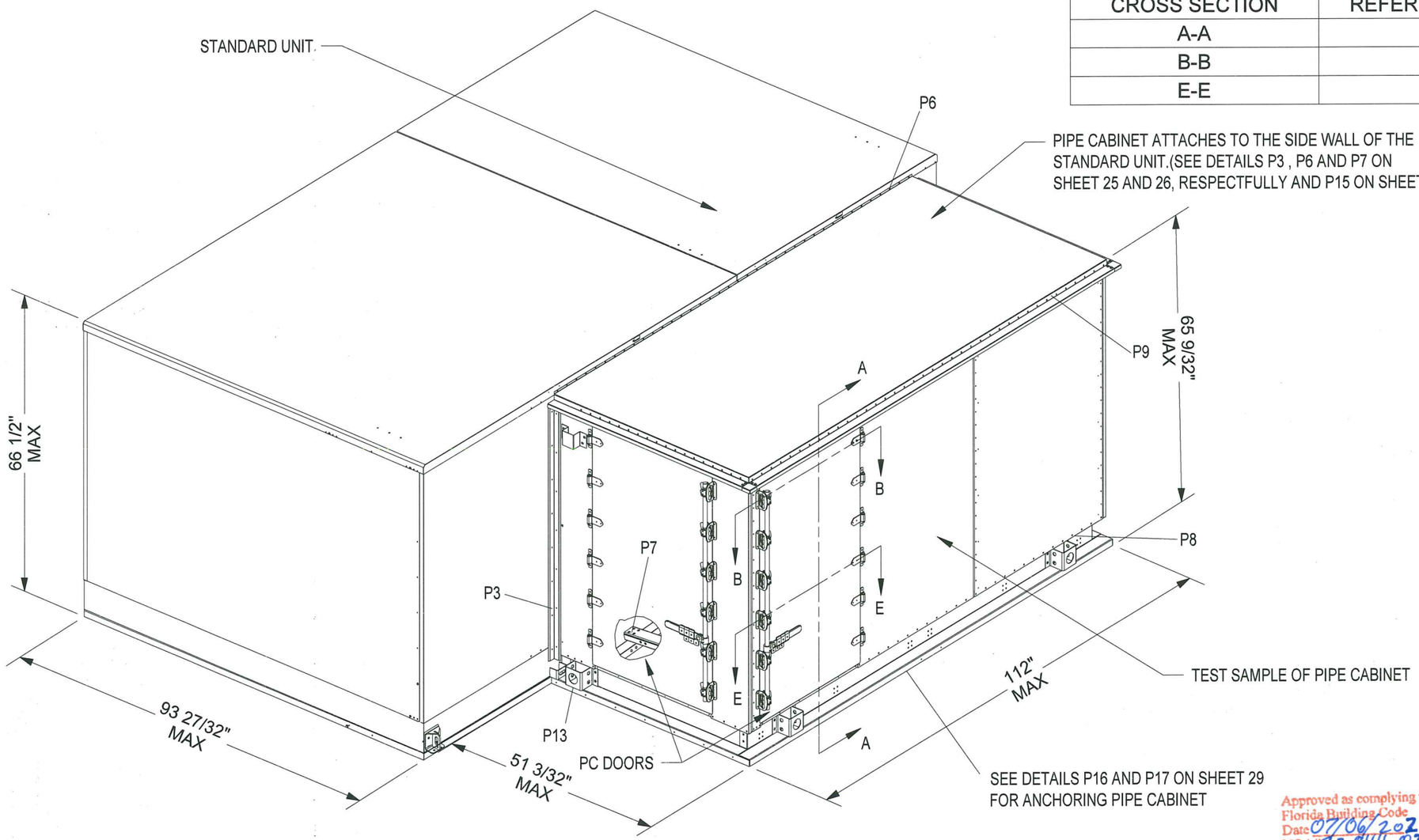

BACK VIEW

Approved as complying with the Florida Building Code
Date 07/06/2023
NOA# 23-0411.03
Miami Dade Product Control
By

DRAWING # S65380496	DESC. TRANE PERFORMANCE CLIMATE CHANGER AIR HANDLER – HURRICANE UNIT	TRANE US Inc.	SCOTT WOLTERS FL#PE# 62354 WOLTERS ENGINEERING (COA# 27194) 15211-97TH ROAD N WEST-PALM BEACH, FL 33412 PH/FAX:(561) 225-1982	REVISION HISTORY	REV.
SHEET 23 OF 40	SECTION			BY	ECT#	REV DATE

SCOTT WOLTERS LICENSE No 62354 STATE OF FLORIDA PROFESSIONAL ENGINEER
MAR 20 2023

PIPE CABINET

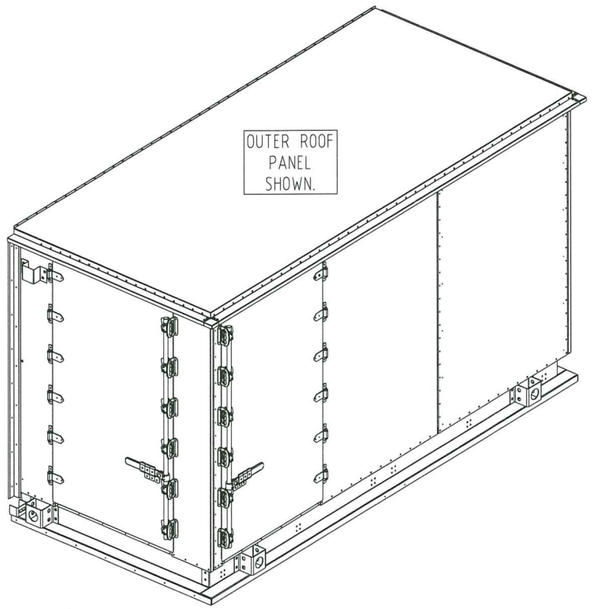

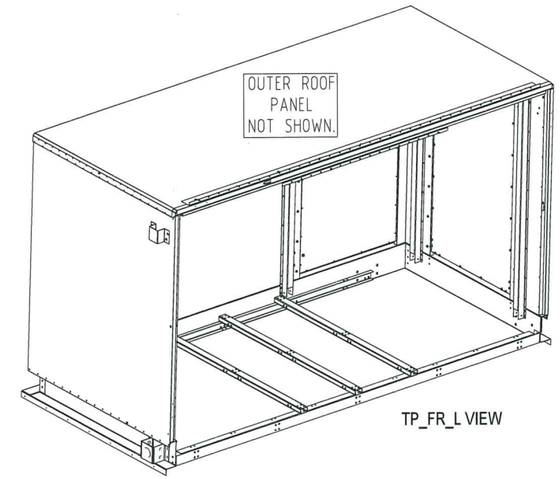

TP_FR_L VIEW

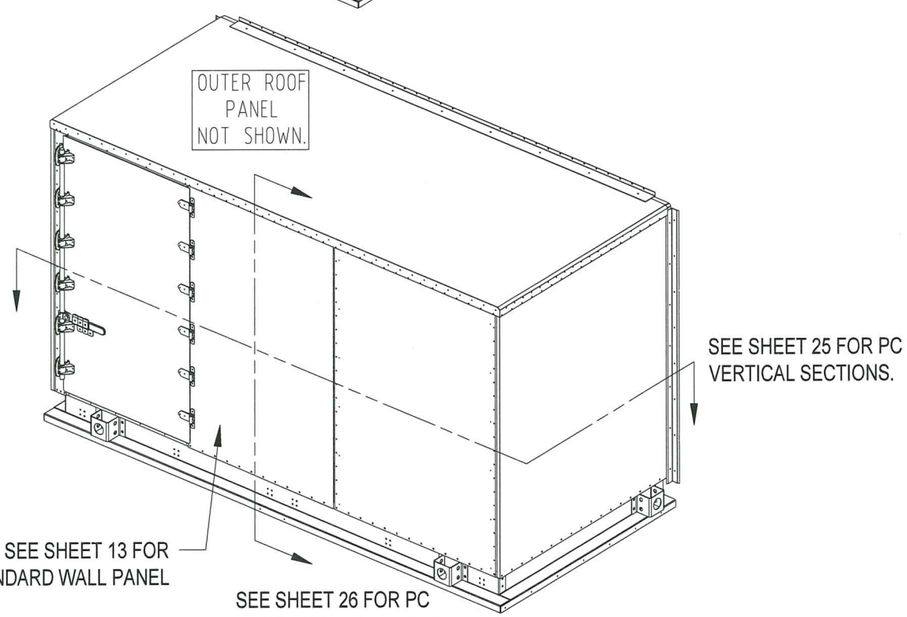

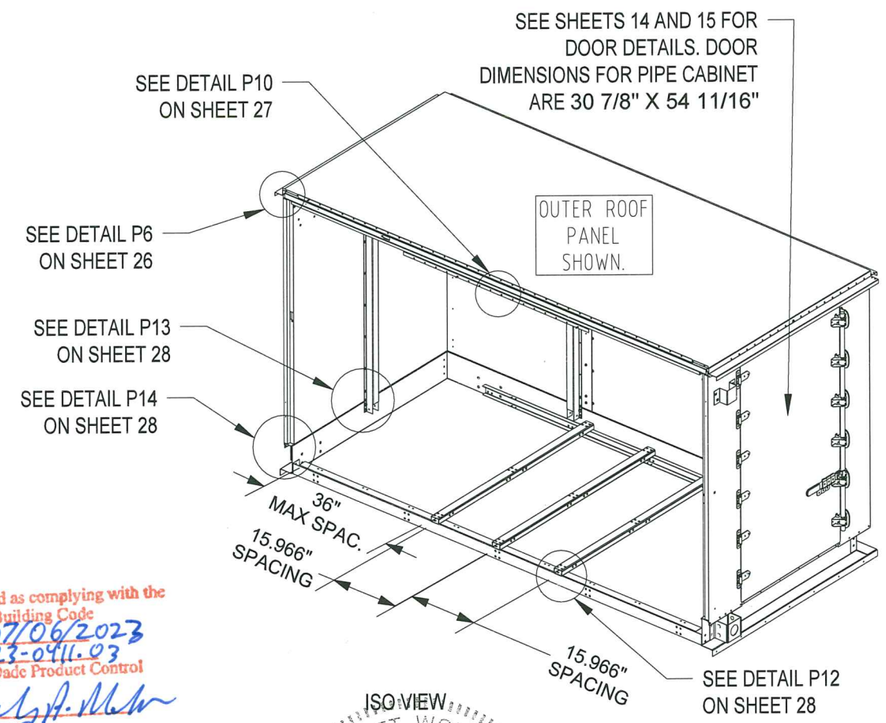

ISO VIEW

Approved as complying with the
Florida Building Code
Date 07/06/2023
NOA# 23-0411.03
Miami Dade Product Control
By

DRAWING # S65380496	DESC. TRANE PERFORMANCE CLIMATE CHANGER AIR HANDLER – HURRICANE UNIT	TRANE US Inc.	SCOTT WOLTERS FL REG# 62354 WOLTERS ENGINEERING (COA# 27194) 5211 87TH ROAD N WEST PALM BEACH, FL 33412 PH/FAX:(561) 225-1982 SEAL: SCOTT WOLTERS LICENSE No 62354 STATE OF FLORIDA PROFESSIONAL ENGINEER MAR 20 2023	REVISION HISTORY	REV.
SHEET 24 OF 40	SECTION			BY / ECT#	REV DATE

4 3 2 1

PIPE CABINET VERTICAL SECTION

NOTE(S):
1. DOOR CAN BE STANDARD DOOR OR PREMIUM DOOR.
   DOORS CAN BE LOCATED ON THE ENDS AND SIDES.

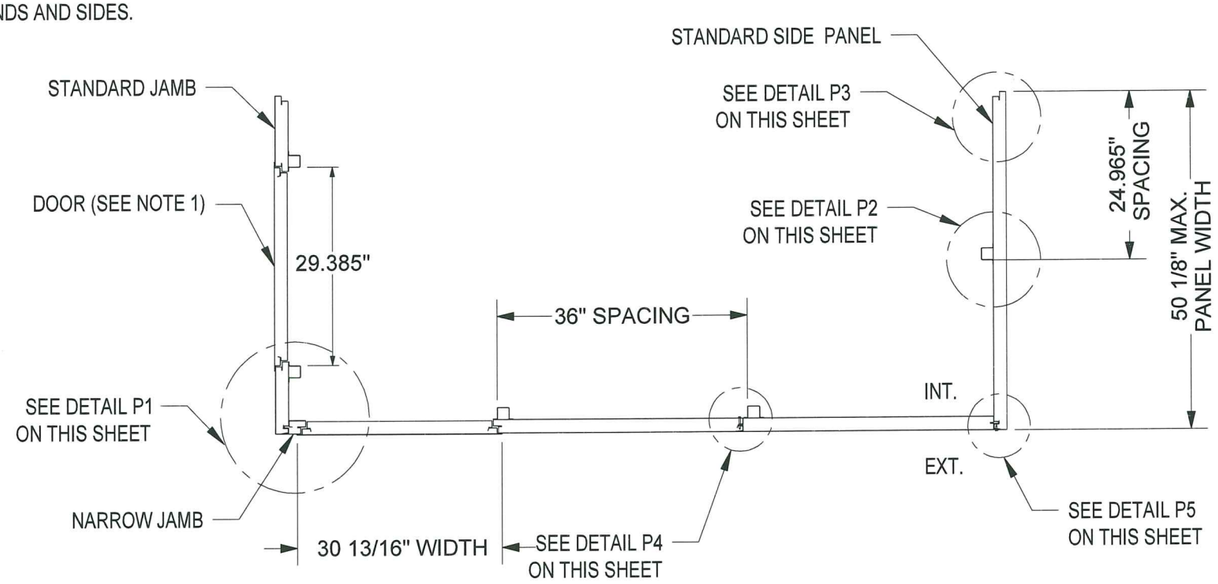

PC VERTICAL SECTIONS

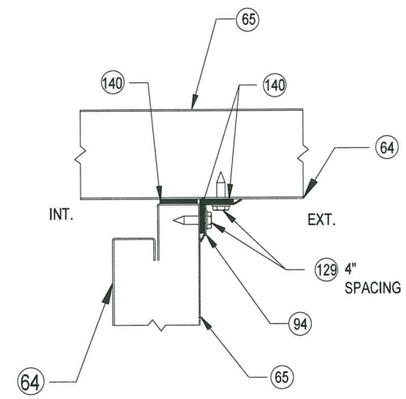

DETAIL P3. PC WALL TO UNIT WALL

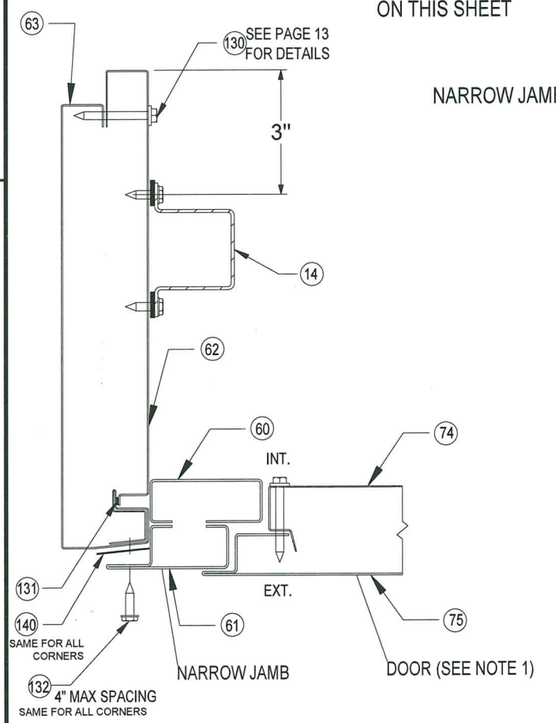

DETAIL P1. DOOR TO EOU

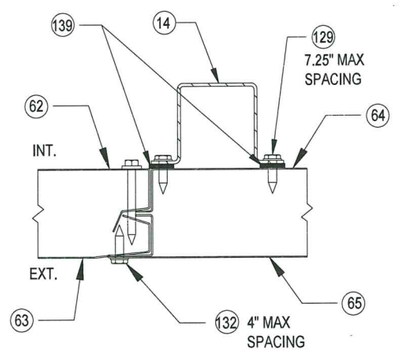

DETAIL P4. SIDE WALL TO SIDE WALL

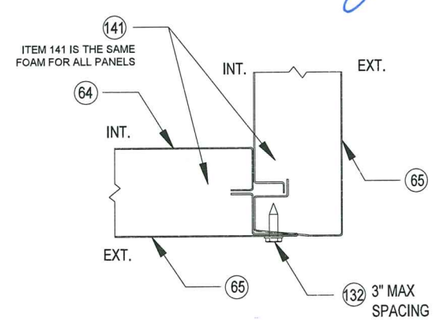

DETAIL P5. SIDE WALL TO EOU

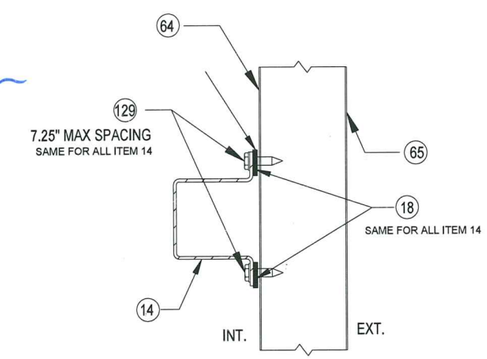

DETAIL P2. HAT CHANNEL TO WALL

Approved as complying with the
Florida Building Code
Date 07/06/2023
NOA# 23-0411.03
Miami Dade Product Control
By

DRAWING # S65380496	DESC. TRANE PERFORMANCE CLIMATE CHANGER AIR HANDLER – HURRICANE UNIT	TRANE US Inc.	SCOTT WOLTERS FL REG 62354 WOLTERS ENGINEERING (COA# 27494) 15231 97TH ROAD N WEST PALM BEACH, FL 33412 PH/FAX:(561)225-1982 SEAL SCOTT WOLTERS LICENSE No 62354 STATE OF FLORIDA PROFESSIONAL ENGINEER MAR 20 2023	REVISION HISTORY	REV.
SHEET 25 OF 40	SECTION			BY	ECT#	REV DATE

4 3 2 1

PIPE CABINET HORIZONTAL SECTION

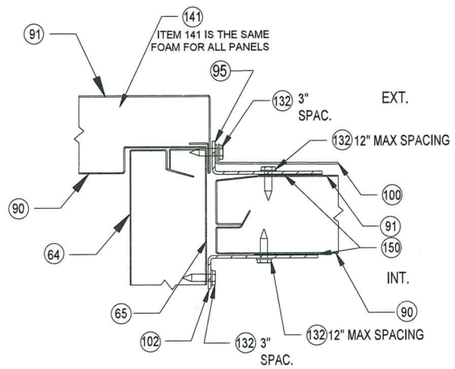

DETAIL P6. PC TO UNIT ROOF

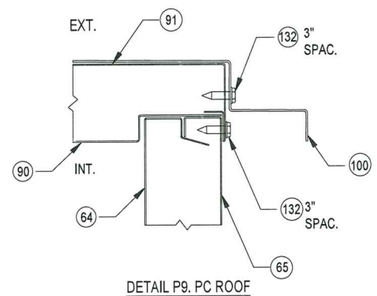

DETAIL P9. PC ROOF

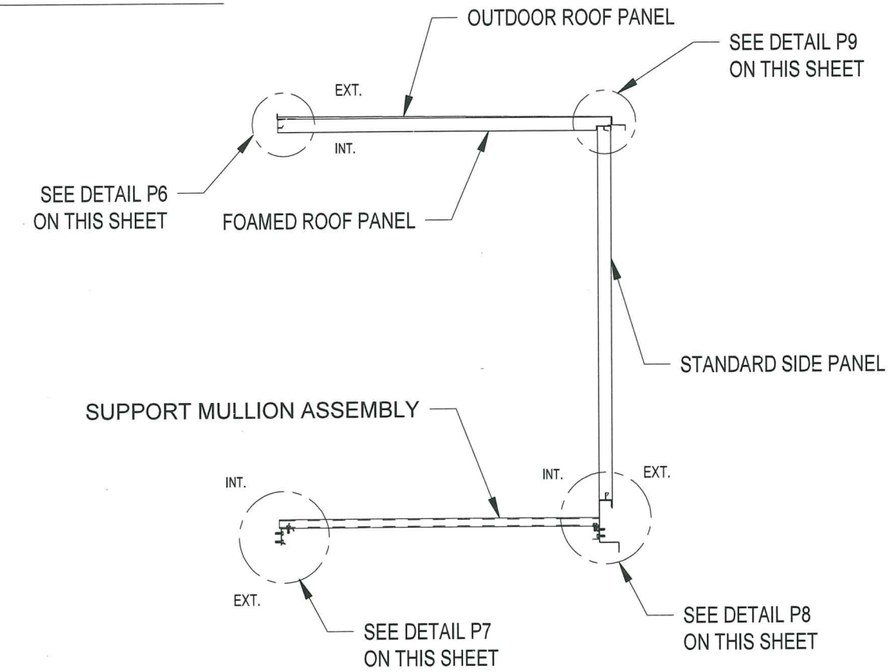

PC HORIZONTAL SECTIONS

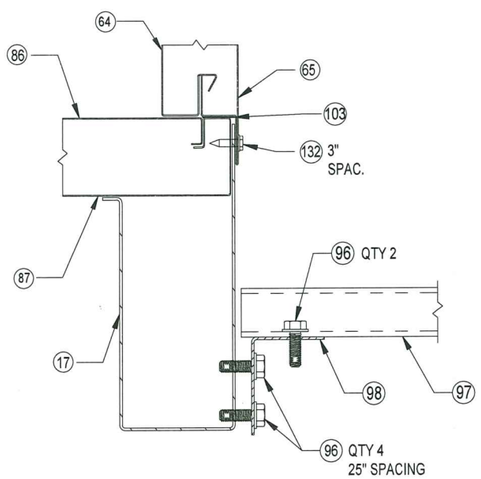

DETAIL P7. PC TO UNIT BASE

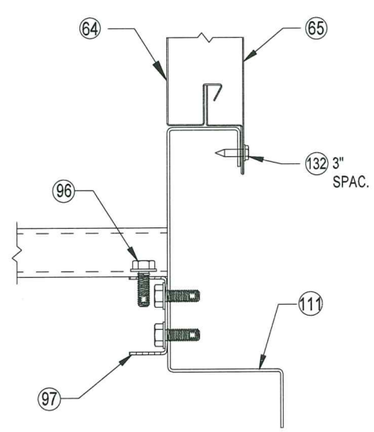

DETAIL P8. PC BASE

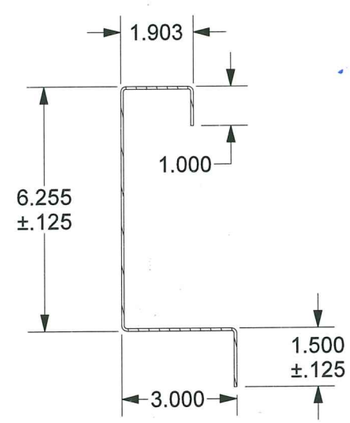

ITEM 111. PC BASERAIL
GALV .068

Approved as complying with the Florida Building Code
Date 07/06/2023
NOA# 23-0411.03
Miami Dade Product Control
By

DRAWING # S65380496	DESC. TRANE PERFORMANCE CLIMATE CHANGER AIR HANDLER – HURRICANE UNIT	TRANE US Inc.	SCOTT WOLTERS FL PE# 62354 SEAL WOLTERS ENGINEERING (COA# 27194) 15211 97TH ROAD N WEST PALM BEACH, FL 33412 PH/FAX:(561)225-1982	REVISION HISTORY	REV.
SHEET 26 OF 40	SECTION			BY / ECT#	REV DATE

STATE OF FLORIDA PROFESSIONAL ENGINEER SCOTT WOLTERS NO. 62354
MAR 20 2023

PIPE CABINET ROOF DETAILS

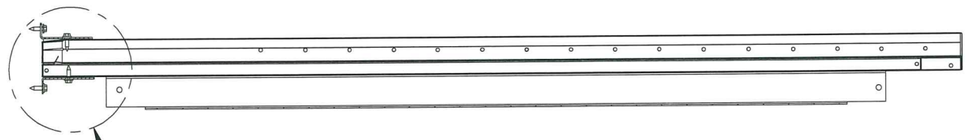

PC ROOF HORIZONTAL SECTIONS

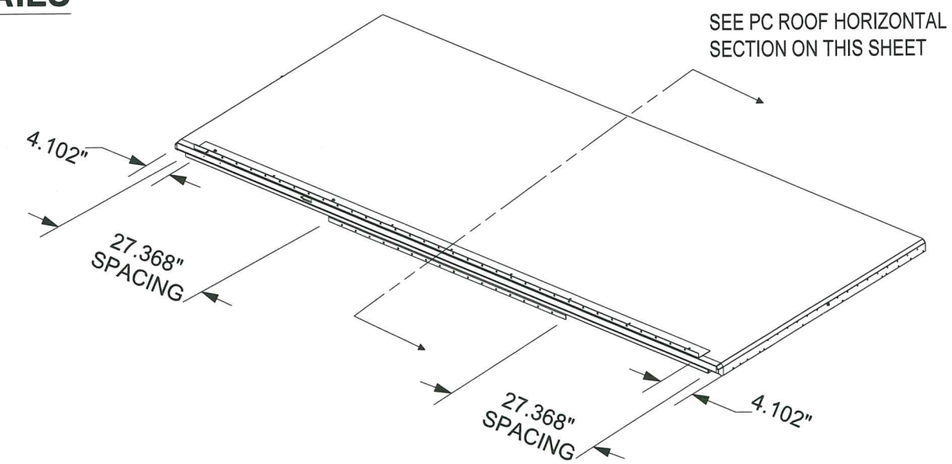

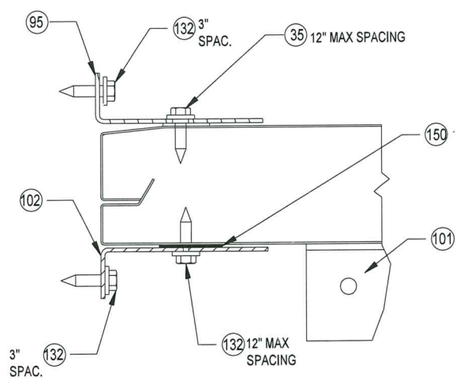

DETAIL P10. PC ROOF SUPPORT AND ANGLE SUPPORT

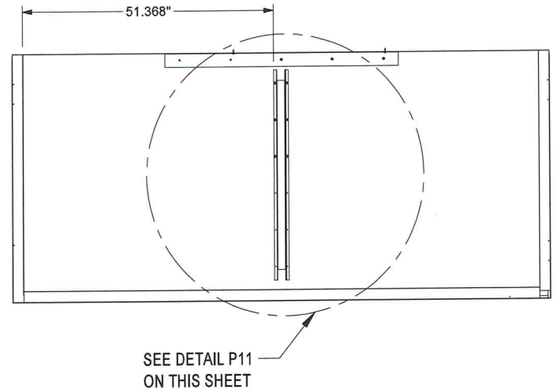

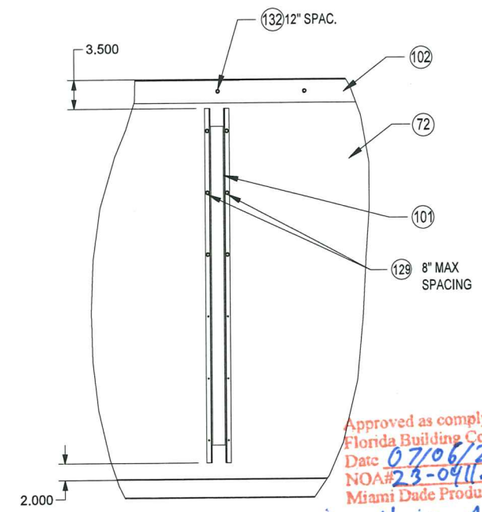

DETAIL P11. PC ROOF SUPPORT

Approved as complying with the
Florida Building Code
Date 07/06/2023
NOA# 23-0411.03
Miami Dade Product Control
By

DRAWING # S65380496	DESC. TRANE PERFORMANCE CLIMATE CHANGER AIR HANDLER – HURRICANE UNIT	TRANE US Inc.	SCOTT WOLTERS FL PE# 62354 WOLTERS ENGINEERING (COA# 27494) 15211 97TH ROAD N WEST PALM BEACH, FL 33412 PH/FAX:(561) 225-1982	REVISION HISTORY	REV.
SHEET 27 OF 40	SECTION		SEAL: SCOTT WOLTERS LICENSE No 62354 STATE OF FLORIDA PROFESSIONAL ENGINEER MAR 20 2023	BY / ECT#	REV DATE

4 3 2 1

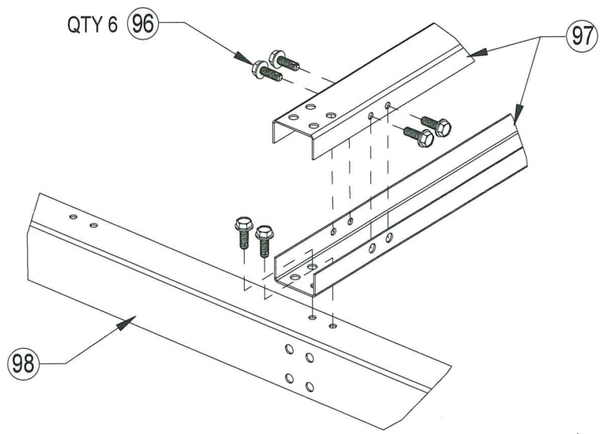

DETAIL P12. REINFORCEMENT ATTACHMENT

150

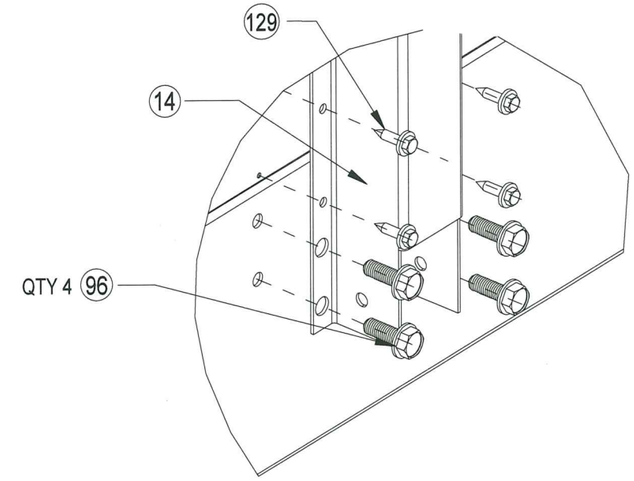

DETAIL P13.HAT CHANNEL

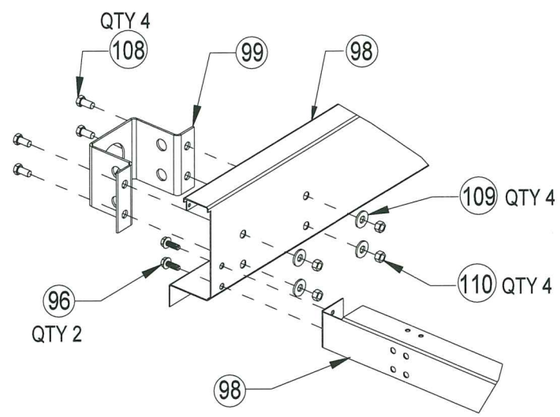

DETAIL P14. SHIPPING CORNER AND LIFTING LUG

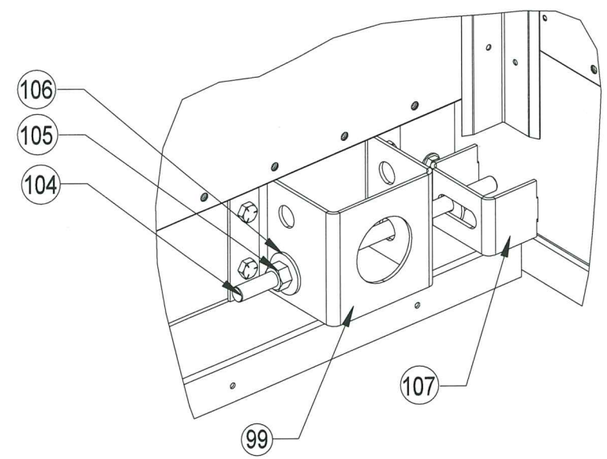

DETAIL P15. LUG CONNECTION

Approved as complying with the Florida Building Code
Date 07/06/2023
NOA# 23-0411.03
Miami Dade Product Control
By

DRAWING # S65380496	DESC. TRANE PERFORMANCE CLIMATE CHANGER AIR HANDLER – HURRICANE UNIT	TRANE US Inc.	SCOTT WOLTERS FL PE# 62354 WOLTERS ENGINEERING (COA# 27194) 15241 97TH ROAD N WEST PALM BEACH, FL 33412 PH/FAX:(561)225-1982 SEAL: SCOTT WOLTERS LICENSE No 62354 STATE OF FLORIDA PROFESSIONAL ENGINEER MAR 20 2023	REVISION HISTORY	REV.
SHEET 28 OF 40	SECTION			BY	ECT#	REV DATE

4 3 2 1

NOTE(S):
1.UNIT MAY BE INSTALLED ONTO CONCRETE (3.2 KSI MIN.COMPRESSIVE STRENGTH) OR 1/4"THICK STEEL (36 KSI MIN YIELD) SUBSTRATES WITH ANCHORS THROUGH LIFTING LUGS AND ANGLE CLIPS ATTACHED TO FIRST LEVEL BASE RAIL AS SHOWN IN THIS SHEET.UNIT MAY ALSO BE INSTALLED ONTO A 36 KSI YIELD STEEL CURB BY OTHERS, WITH ITEM 17 SMS AS SHOWN IN DETAIL B.FOR PIPE CABINET ANCHORAGE SEE DETAILS P12 AND P13.

STANDARD UNIT ANCHORAGE DETAILS

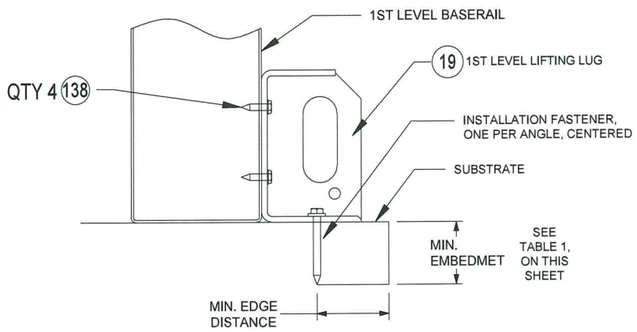

DETAIL A: TYPICAL ANCHORAGE AT LUGS

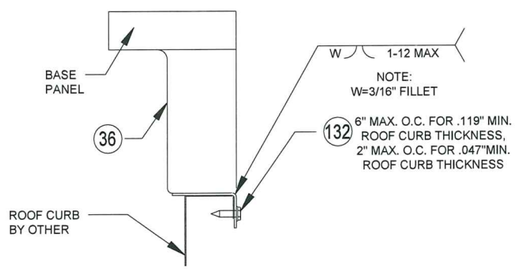

DETAIL B: TYPICAL INSTALLATION BASE RAIL TO CURB

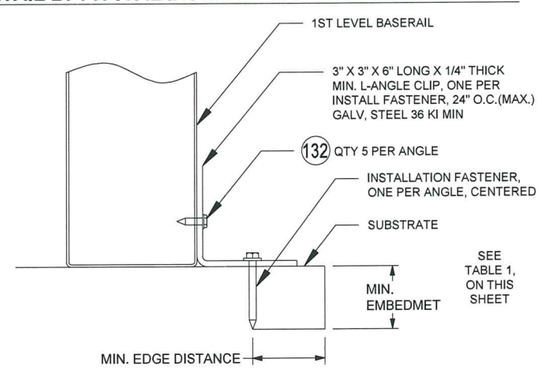

DETAIL C: TYPICAL ANCHORAGE AT ANGLE CLIPS

PIPE CABINET ANCHORAGE DETAILS

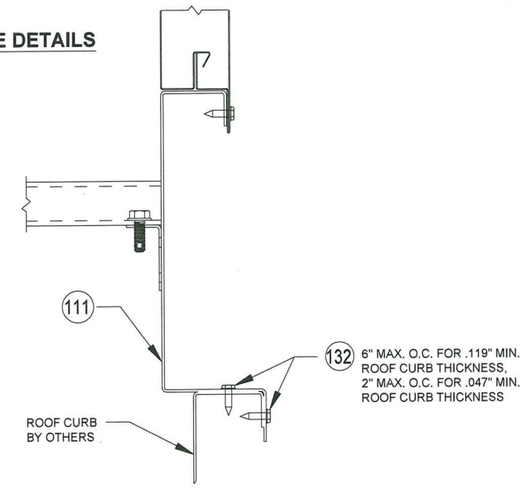

DETAIL P16. ANCHORAGE TO ROOF CURE

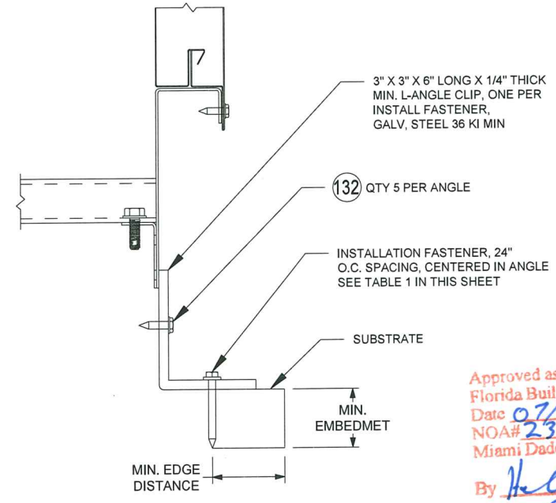

DETAIL P17. DIRECT ANCHORAGE TO SUBSTRATE

Approved as complying with the Florida Building Code
Date 07/06/2023
NOA# 23-0411.03
Miami Dade Product Control
By

TABLE 1. INSTALLATION ANCHOR INFORMATION

ANCHOR/ SUBSTRATE	MIN. EMBED.	MIN. EDGE DIST.
1/2" DIA. DEWALT SCREWBOLT+ OR 1/2" DIA. THREADED ROD WITH DEWALT AC200+ ADHESIVE IN 3000 PSI (MIN) CONCRETE	3" 2 3/4"	4"
1/2' HH. F-TYPE THREAD CUTTING SCREW INSTALLED IN 36 KSI MIN STEEL 1/4" THICK MIN. (FULL THREAD ENGAGEMENT)	1/4"	1 1/4"

SCOTT WOLTERS
FL PE# 62354
WOLTERS ENGINEERING
(COA# 27194)
15211 97TH ROAD N
WEST PALM BEACH, FL 33412
PH/FAX:(561)-225-1982
SEAL
SCOTT WOLTERS LICENSE No 62354 STATE OF FLORIDA PROFESSIONAL ENGINEER
MAR 20 2023

DRAWING # S65380496	DESC. TRANE PERFORMANCE CLIMATE CHANGER AIR HANDLER – HURRICANE UNIT	TRANE US Inc.	REVISION HISTORY	REV.
SHEET 29 OF 40	SECTION		BY / ECT#	REV DATE

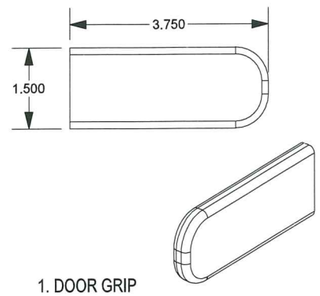

1. DOOR GRIP

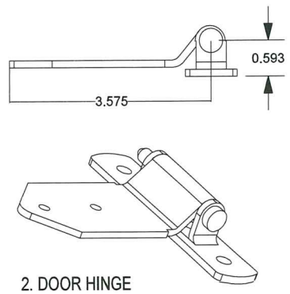

2. DOOR HINGE
GALV .120

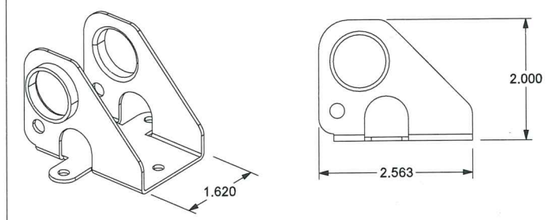

3. DOOR CAM BRACKET
GALV .060

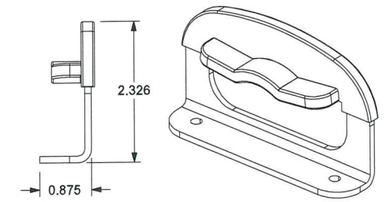

4. STRIKER PLATE
GALV .110 MIN

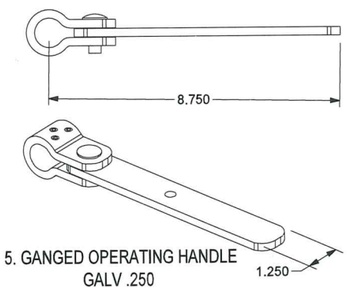

5. GANGED OPERATING HANDLE
GALV .250

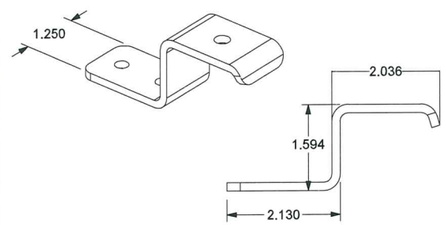

6. PADLOCK BRACKET
GALV .156 MIN

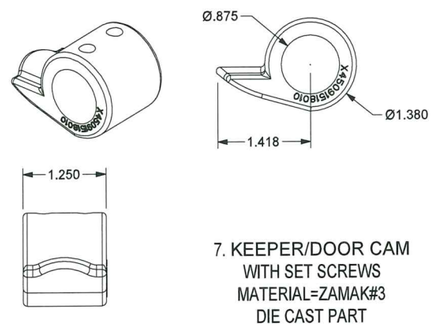

7. KEEPER/DOOR CAM
WITH SET SCREWS
MATERIAL=ZAMAK#3
DIE CAST PART

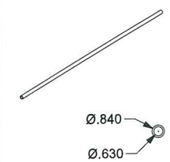

8. DOOR TUBE
STEEL

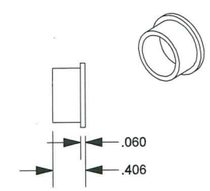

9. DOOR PLUG
STEEL

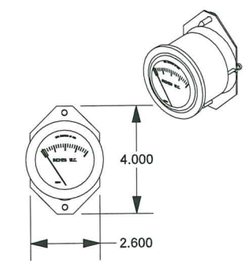

10. MAGNEHELIC GAGE

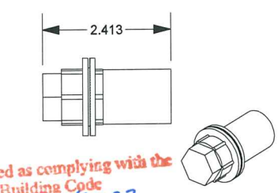

11. TEST PORT

Approved as complying with the
Florida Building Code
Date 07/06/2023
NOA# 23-0411.03
Miami Dade Product Control
By

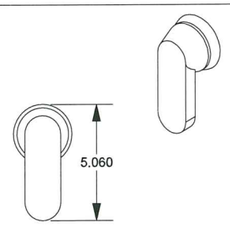

12. ROTARY DISCONNECT

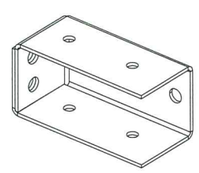

13. HAT CHANNEL BRACKET
3" X 1.5" X 1.5"
STEEL .068

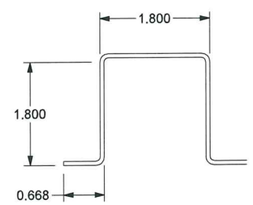

14. HAT CHANNEL
GALV .068

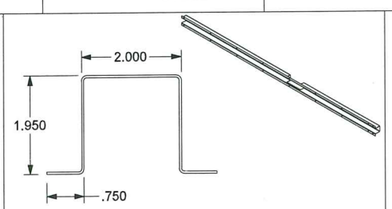

15. SHORT ROOF KEEL
GALV .044

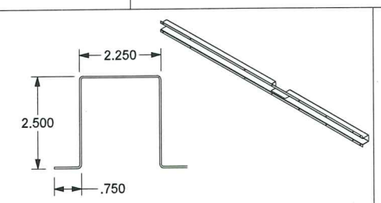

16. TALL ROOF KEEL
GALV .044

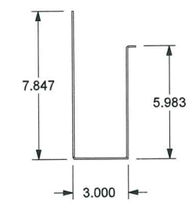

17. BASE RAIL
GALV .068

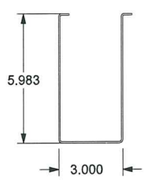

18. BASE RAIL
GALV .068

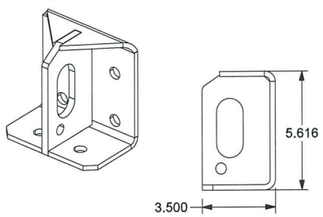

19. LIFTING LUG
GALV .025

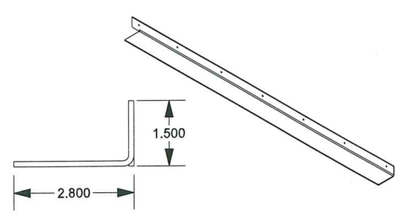

20. DRIP LIP
GALV .124

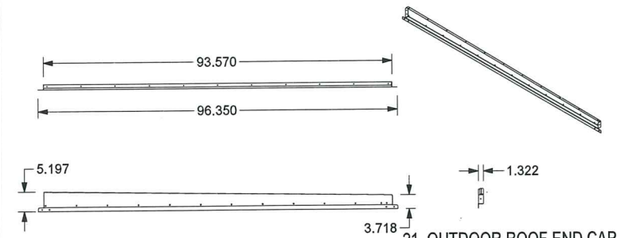

21. OUTDOOR ROOF END CAP
GALV .044

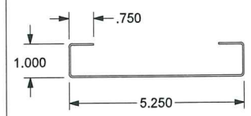

22. PTAF ROOF CHANNEL
GALV .044

DRAWING # S65380496	DESC. TRANE PERFORMANCE CLIMATE CHANGER AIR HANDLER – HURRICANE UNIT	TRANE US Inc.	SCOTT WOLTERS FL REG# 62354 SEAL WOLTERS ENGINEERING ?(COA# 27194 15211 97TH ROAD N WEST PALM BEACH, FL 33412 PH/FAX:(561) 225-1982	REVISION HISTORY / REV. / BY / ECT# / REV DATE
SHEET 30 OF 40	SECTION			

SCOTT WOLTERS LICENSE No 62354 STATE OF FLORIDA PROFESSIONAL ENGINEER
MAR 20 2023

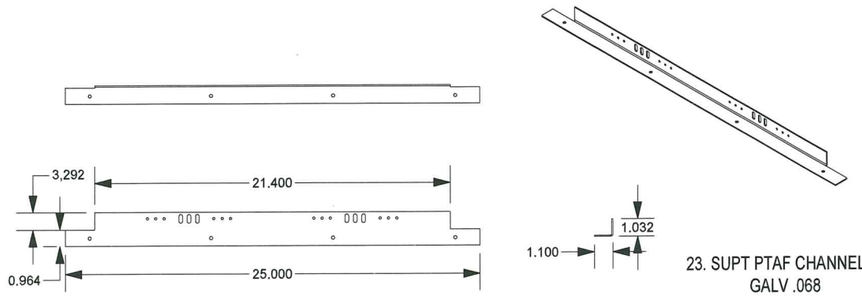

23. SUPT PTAF CHANNEL
GALV .068

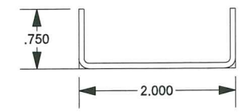

24. SUPT VERT CHANNEL
GALV .068

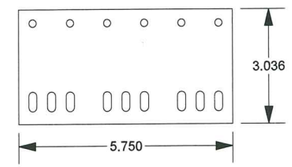

25. HURRICANE SPLICE PLATE
GALV .044

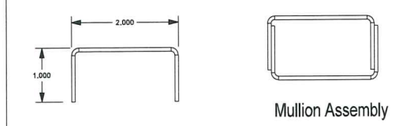

97. SUPPORT MULLION ASSEMBLY
GALV .068

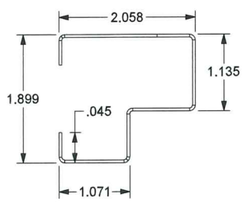

27. MANUFACTURE
DOOR HEADER
GALV .043

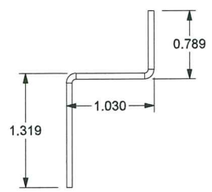

28. MANUFACTURE
DOOR FOOTER
GALV .068

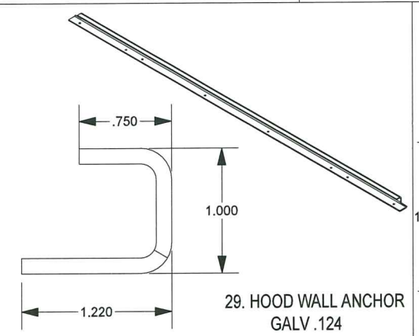

29. HOOD WALL ANCHOR
GALV .124

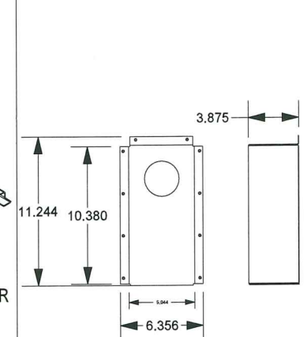

30. JUNCTION BOX
GALV .044

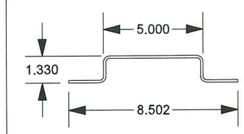

31. ROOF DOAF BEAM
GALV . 124

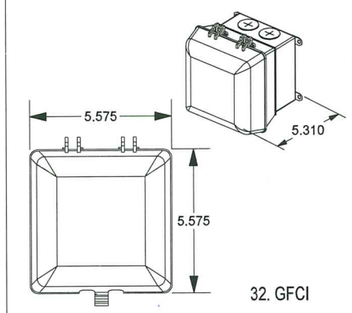

32. GFCI

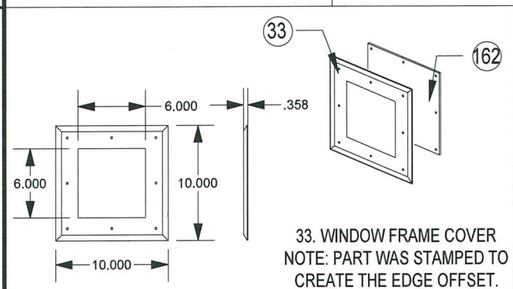

33. WINDOW FRAME COVER
NOTE: PART WAS STAMPED TO
CREATE THE EDGE OFFSET.

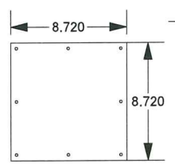

162. FLEXIGLASS WINDOW
.188 THICK

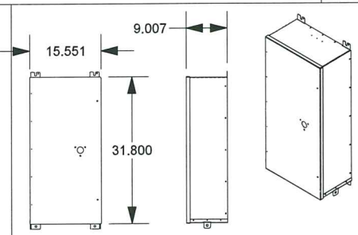

34. MICP BOX
GALV .044 MIN

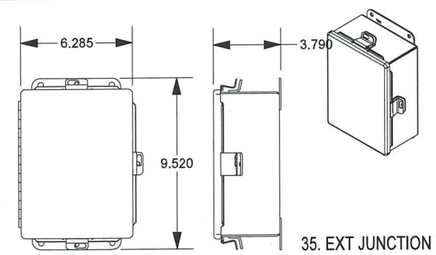

35. EXT JUNCTION BOX
GALV .093

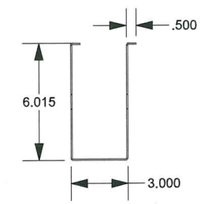

36. BASE DOAF BEAM
GALV . 068

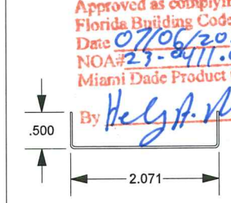

37. FOAM RETAINER
GALV . 028

Approved as complying with the
Florida Building Code
Date 07/06/2023
NOA# 23-0711.03
Miami Dade Product Control
By

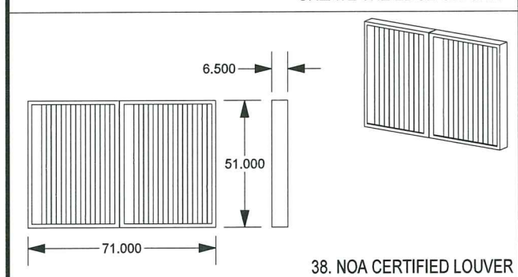

38. NOA CERTIFIED LOUVER
ALUMINUM

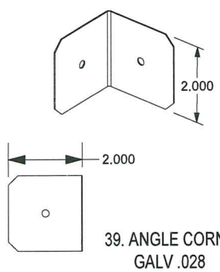

39. ANGLE CORNER
GALV .028

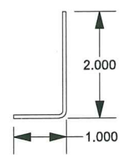

40. L ANGLE CHANNEL
GALV .068

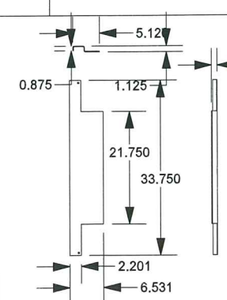

41. WALL ANCHOR
GALV .124

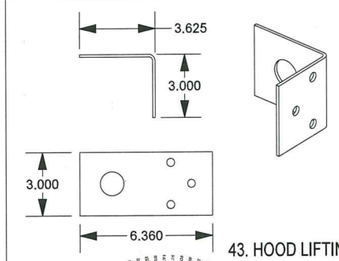

43. HOOD LIFTING LUG
GALV . 124

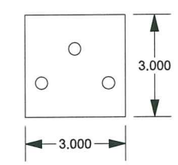

44. BACKING PLATE
GALV . 124

DRAWING # S65380496	DESC. TRANE PERFORMANCE CLIMATE CHANGER AIR HANDLER – HURRICANE UNIT	TRANE US Inc.	REVISION HISTORY
SHEET 31 OF 40	SECTION		BY / ECT# / REV DATE / REV.

SCOTT WOLTERS
FL PE# 62354
WOLTERS ENGINEERING
(COA# 27194)
12211 97TH ROAD N
WEST PALM BEACH, FL 33412
PH/FAX: (561) 225-1982

SEAL:
SCOTT WOLTERS
STATE OF FLORIDA
No 62354
PROFESSIONAL ENGINEER
MAR 20 2023

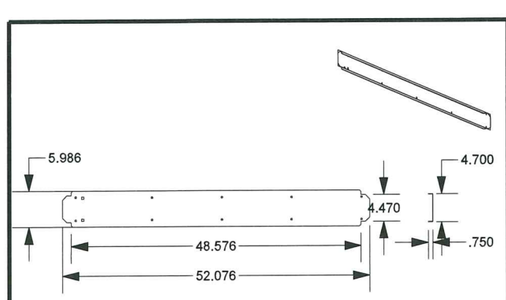

45. LEFT COVER PLATE
GALV .055

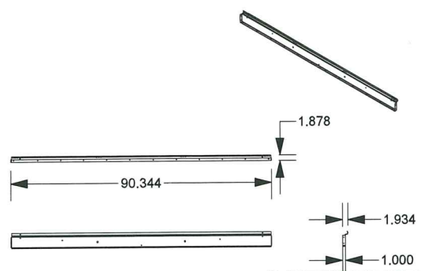

46. BOTTOM CHANNEL
GALV . 124

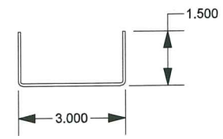

47. ANGLE CHANNEL
/VERTICAL SUPPORT CHANNEL
GALV .068

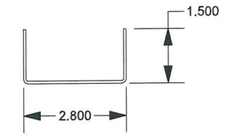

48. TOP CHANNEL
/ BOTTOM FRAME CHANNEL
GALV .068

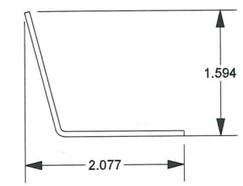

49. TOP FRAME CHANNEL
GALV .068

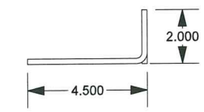

50. FRONT L-ANGLE CHANNEL
GALV .124

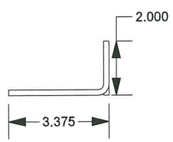

51. BACK L-ANGLE CHANNEL
GALV .124

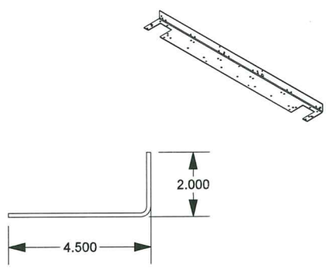

52. HURRICANE L-ANGLE CHANNEL
GALV .124

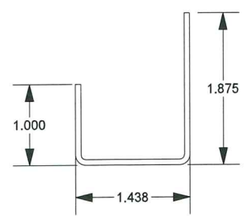

53. ELIMINATOR SPACER
GALV .068

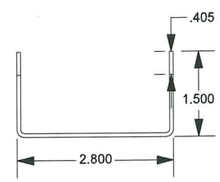

56. DIAGONAL CHANNEL
GALV .068

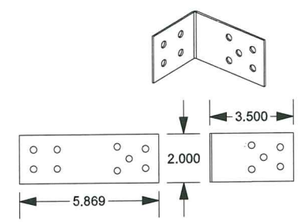

57. BASE RAIL BRACKET
GALV .068

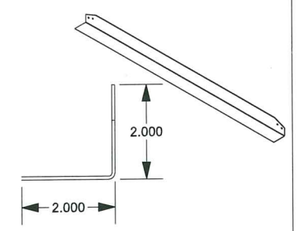

58. ANGEL SUPPORT
GALV .068

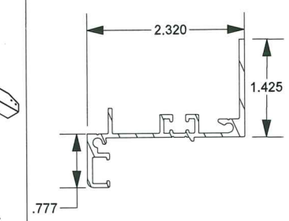

59. DOOR MOUNTING FRAME
ALUMINUM 0.080

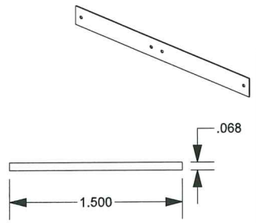

134. HOOD BACKING PLATE
GALV .068

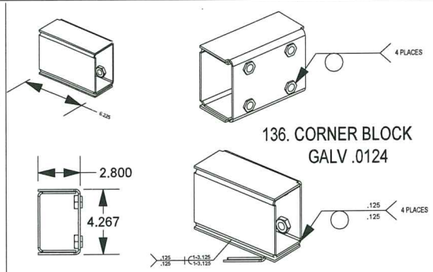

136. CORNER BLOCK
GALV .0124

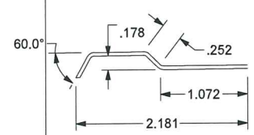

142. DECORATIVE COVER
GALV .044

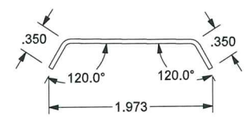

144. SEAM CAP
GALV .068

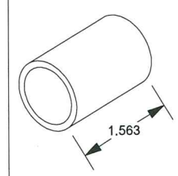

147. 1" CONDUIT BUSHING
GALV .094

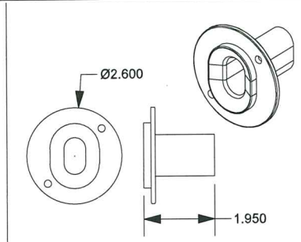

148. DISCONNECT SHAFT

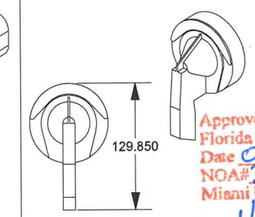

149. DOOR HANDLE

Approved as complying with the Florida Building Code
Date 07/06/2023
NOA# 23-0411.03
Miami Dade Product Control
By Holly A. Molar

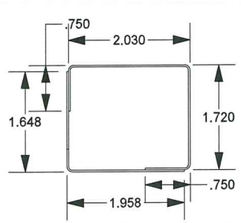

152. PREMIUM DOOR HEADER
GALV .028

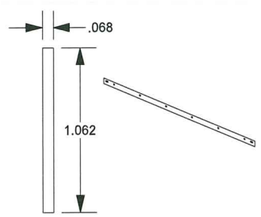

153. PREMIUM DOOR FOOTER
GALV .068

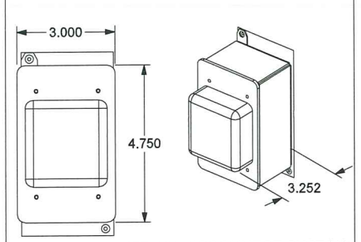

155. UV DISCONNECT SWITCH

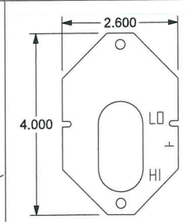

157. MINIHELIC MOUNTING PLATE
GALV .054

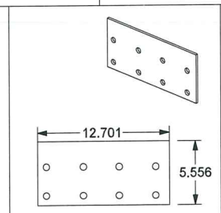

159. BASE RAIL SPLICE
GALV .250

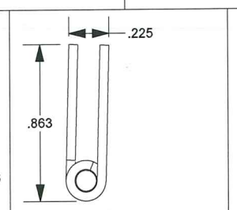

161. PIANO HINGE
ALUMINUM .500

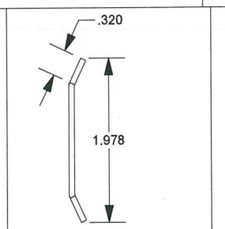

163. ROOF BEAM CAP
GALV. 068

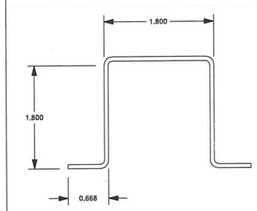

101. OUTDOOR ROOF SUPPORT
GALV .068

DRAWING # S65380496	DESC. TRANE PERFORMANCE CLIMATE CHANGER AIR HANDLER – HURRICANE UNIT	TRANE US Inc.	SCOTT WOLTERS FL REG# 62354 WOLTERS ENGINEERING (COA# 27194) 15211 97TH ROAD N WEST PALM BEACH, FL 33412 PH/FAX:(561) 225-1982	REVISION HISTORY	REV.
SHEET 32 OF 40	SECTION			BY	ECT# / REV DATE

SCOTT WOLTERS LICENSE NO. 62354 STATE OF FLORIDA PROFESSIONAL ENGINEER
MAR 20 2023

B

A

4 3 2 1

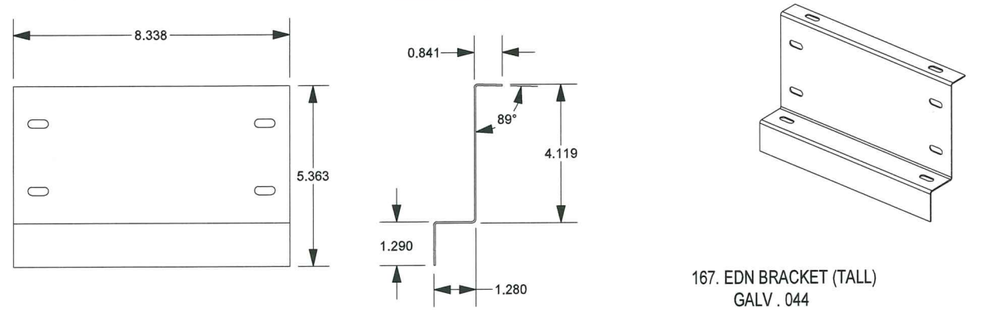

167. EDN BRACKET (TALL)
GALV . 044

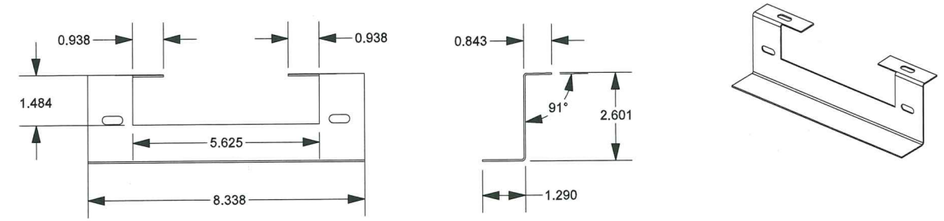

168. END BRACKET (SHORT)
GALV . 044

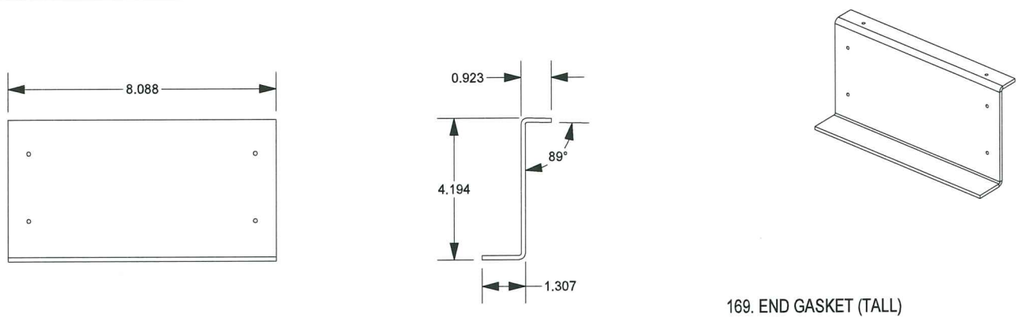

169. END GASKET (TALL)

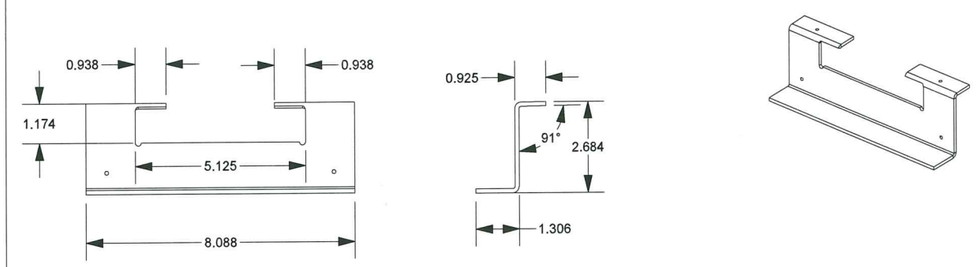

170. END GASKET (SHORT)

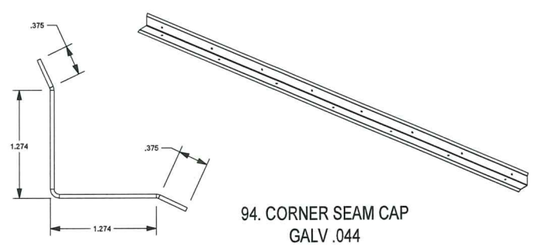

94. CORNER SEAM CAP
GALV .044

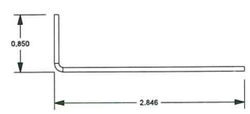

95. PC ROOF ANGLE
GALV .068

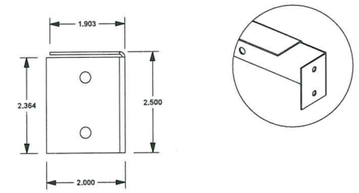

98. BASE SUPPORT CHANNEL/
PC BASE ANGLE
GALV .068

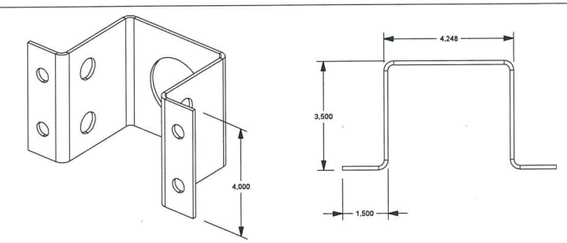

99. PC LIFTING LUG
GALV .124

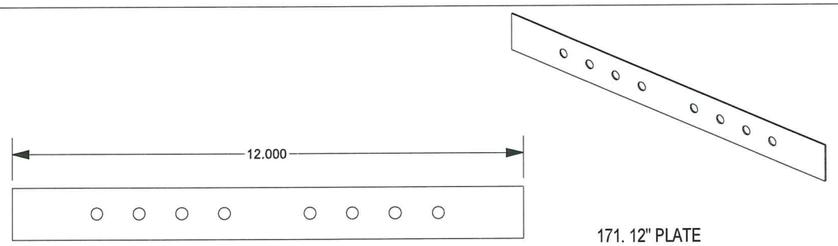

171. 12" PLATE
.044 GALV

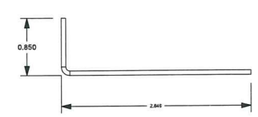

102. ANGLE SUPPORT
GALV .068

Approved as complying with the
Florida Building Code
Date 07/06/2023
NOA# 23-0911.03
Miami-Dade Product Control
By

DRAWING # S65380496	DESC. TRANE PERFORMANCE CLIMATE CHANGER AIR HANDLER – HURRICANE UNIT	TRANE US Inc.	SCOTT WOLTERS FL PE# 62354 WOLTERS ENGINEERING (COA# 27194) 15211 97TH ROAD N WEST PALM BEACH, FL 33412 PHE&X: (561) 225-1982 SEAL: SCOTT WOLTERS LICENSE No 62354 STATE OF FLORIDA PROFESSIONAL ENGINEER MAR 20 2023	REVISION HISTORY	REV.
SHEET 33 OF 40	SECTION			BY	ECT# / REV DATE

B

A

4 3 2 1

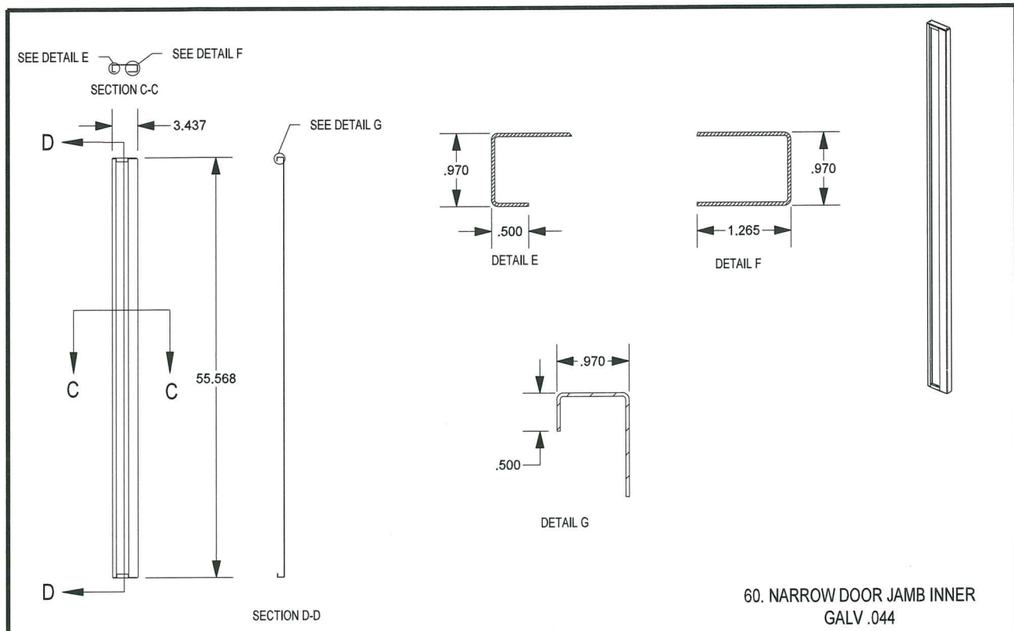

60. NARROW DOOR JAMB INNER
GALV .044

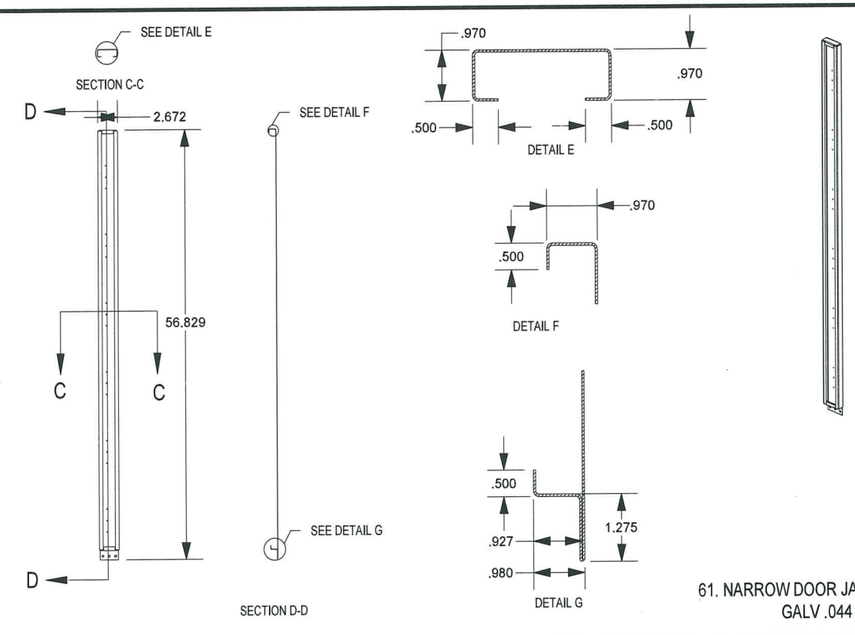

61. NARROW DOOR JAMB OUTER
GALV .044

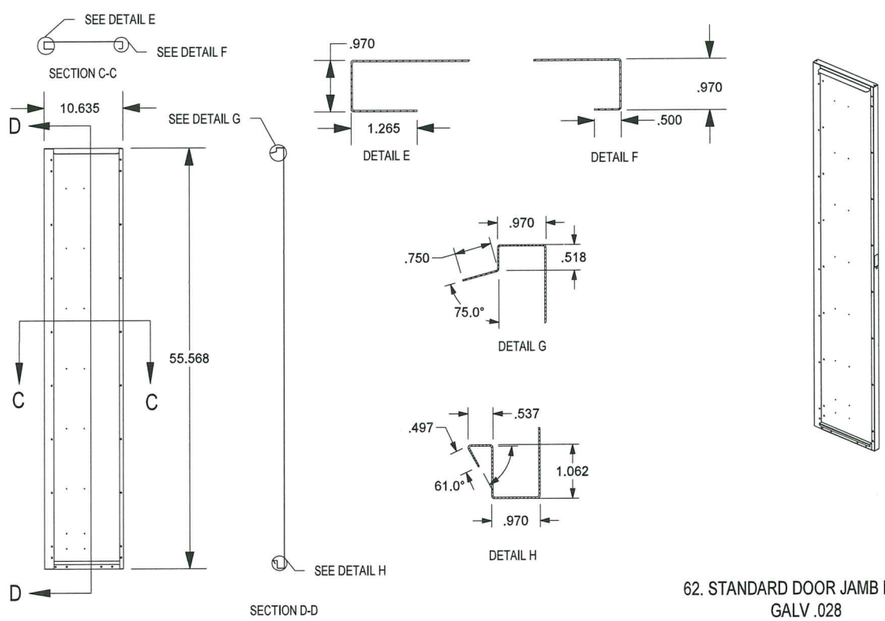

62. STANDARD DOOR JAMB INNER
GALV .028

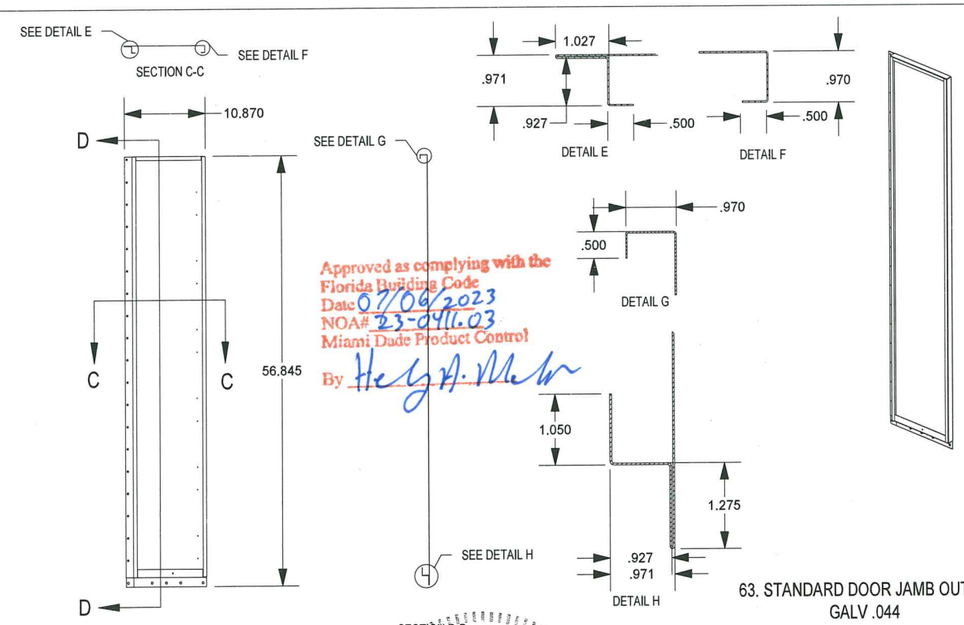

Approved as complying with the
Florida Building Code
Date 07/06/2023
NOA# 23-0411.03
Miami Dade Product Control
By

63. STANDARD DOOR JAMB OUTER
GALV .044

DRAWING # S65380496	DESC. TRANE PERFORMANCE CLIMATE CHANGER AIR HANDLER – HURRICANE UNIT	TRANE US Inc.	SCOTT WOLTERS FL PE# 62354 WOLTERS ENGINEERING TEOA# 27184 15211 97TH ROAD N WEST PALM BEACH, FL 33412 PH/FAX: (561) 225-1982	SEAL: SCOTT WOLTERS LICENSE No 62354 STATE OF FLORIDA PROFESSIONAL ENGINEER MAR 20 2023	REVISION HISTORY	REV.
SHEET 34 OF 40	SECTION				BY	ECT#	REV DATE

B

A

4 3 2 1

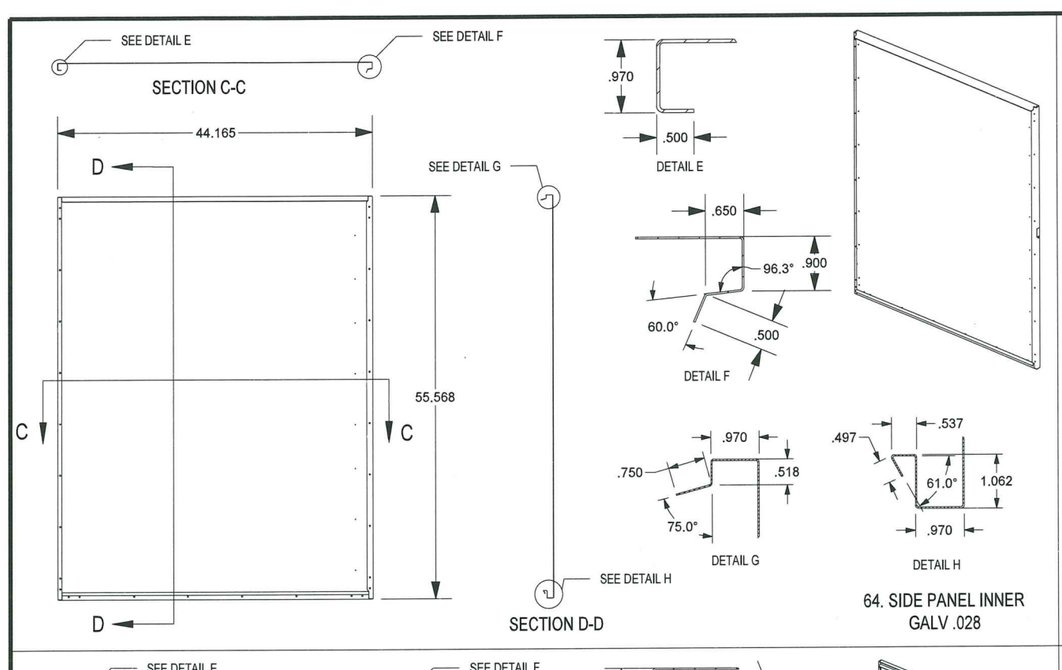

64. SIDE PANEL INNER
GALV .028

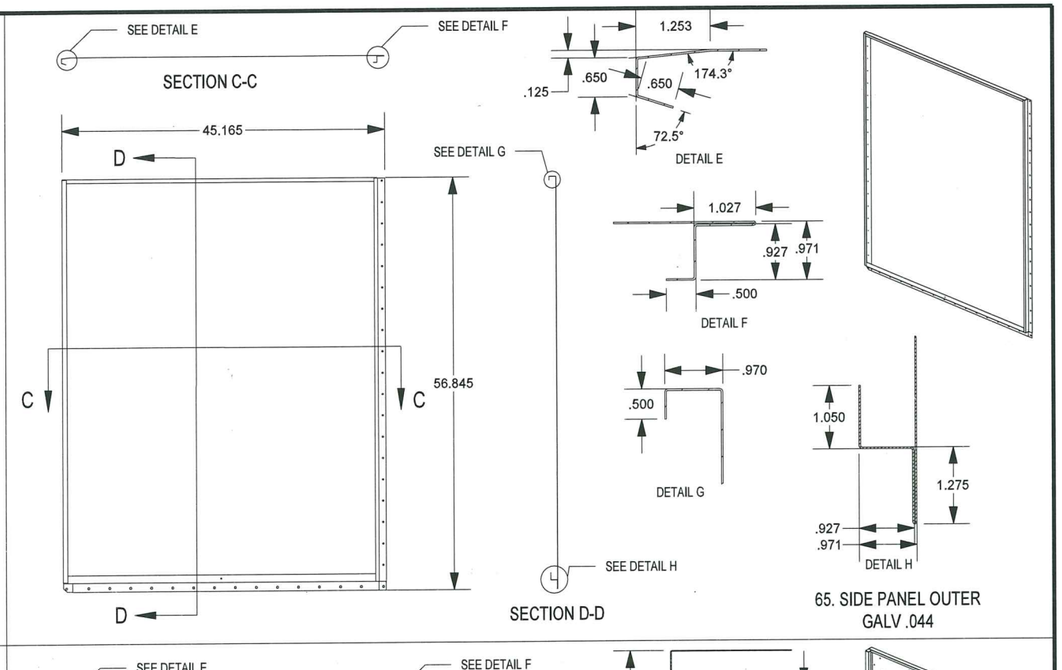

65. SIDE PANEL OUTER
GALV .044

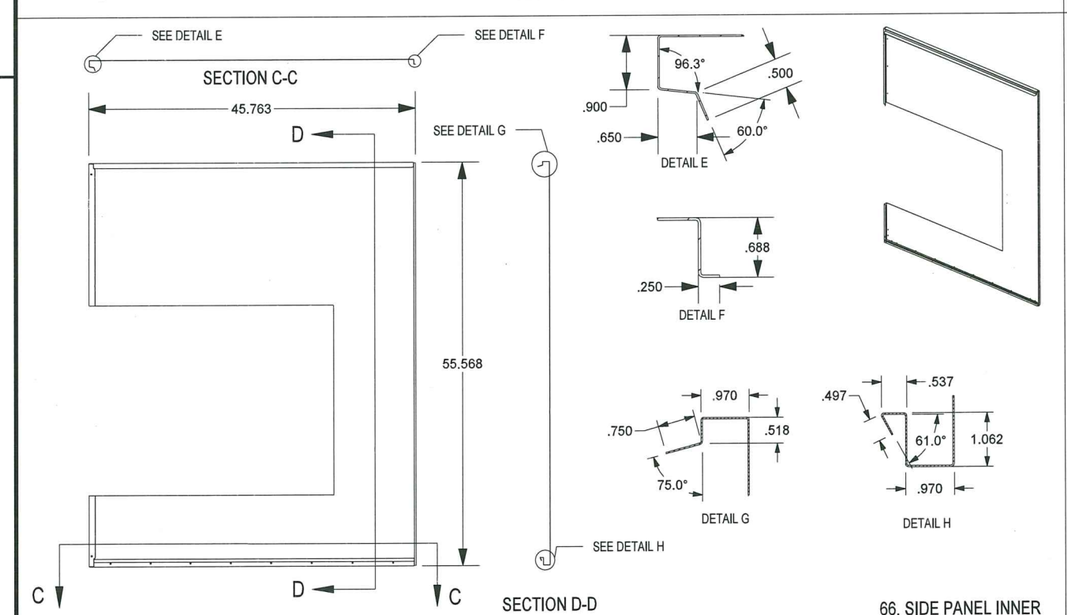

66. SIDE PANEL INNER
GALV .028

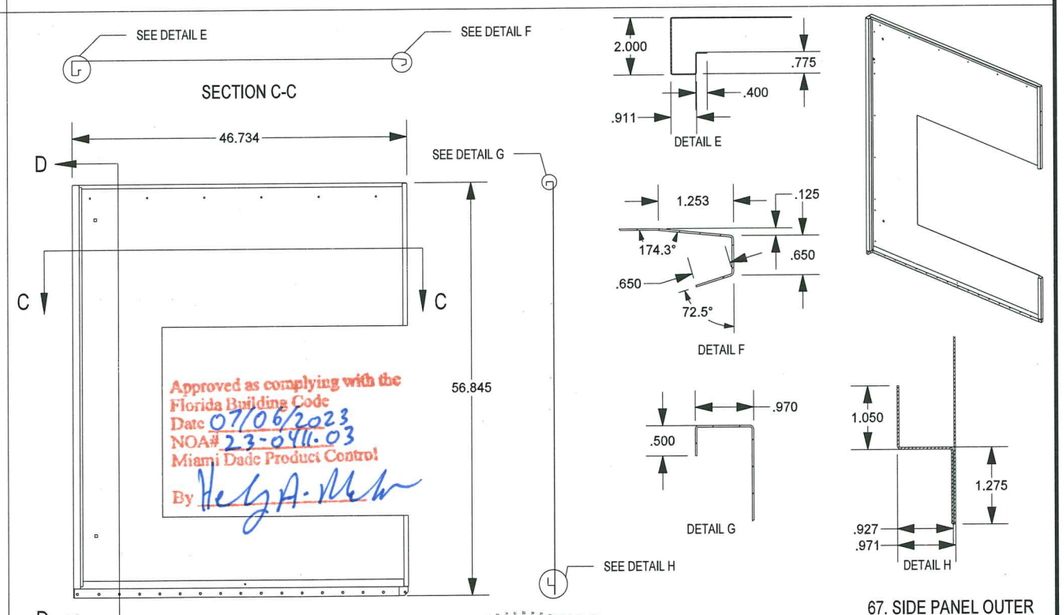

67. SIDE PANEL OUTER
GALV .044

Approved as complying with the
Florida Building Code
Date 07/06/2023
NOA# 23-0411.03
Miami Dade Product Control
By

DRAWING # S65380496	DESC. TRANE PERFORMANCE CLIMATE CHANGER AIR HANDLER – HURRICANE UNIT	TRANE US Inc.	SCOTT WOLTERS FL PE# 62354 WOLTERS ENGINEERING (COA# 27184) 15243 97TH ROAD N WEST PALM BEACH, FL 33412 PH/FAX:(561)225-1982	SEAL: SCOTT WOLTERS LICENSE No 62354 STATE OF FLORIDA PROFESSIONAL ENGINEER MAR 20 2023	REVISION HISTORY	REV.
SHEET 35 OF 40	SECTION				BY	ECT#	REV DATE

B

A

4 3 2 1

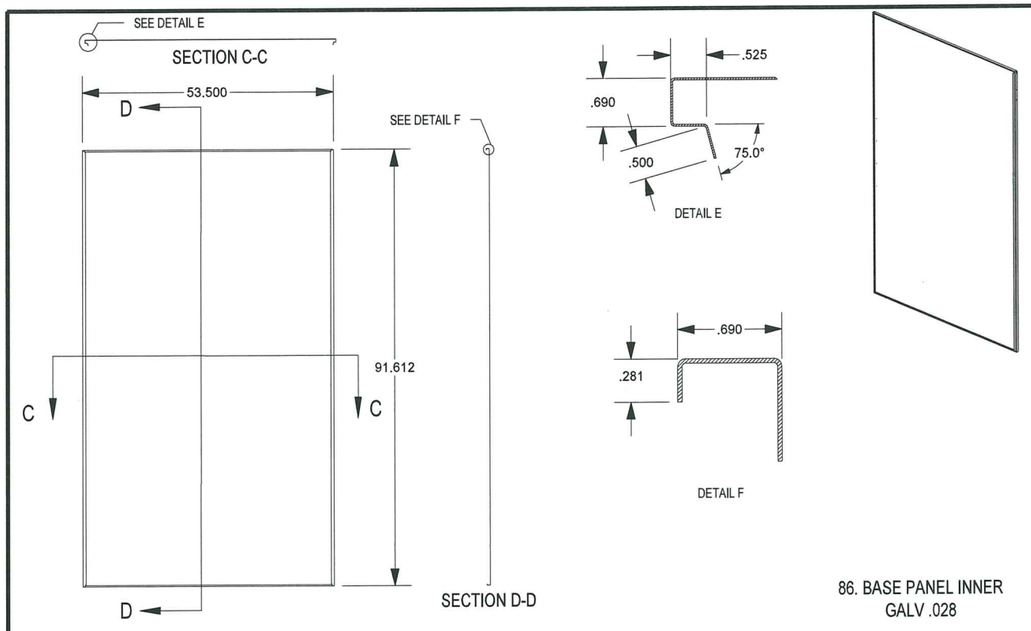

86. BASE PANEL INNER
GALV .028

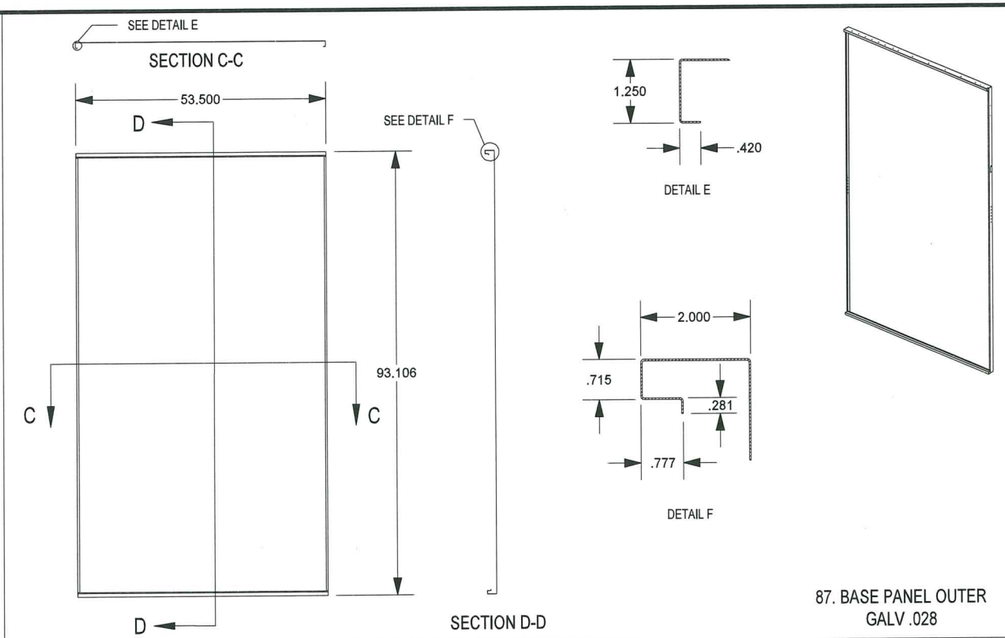

87. BASE PANEL OUTER
GALV .028

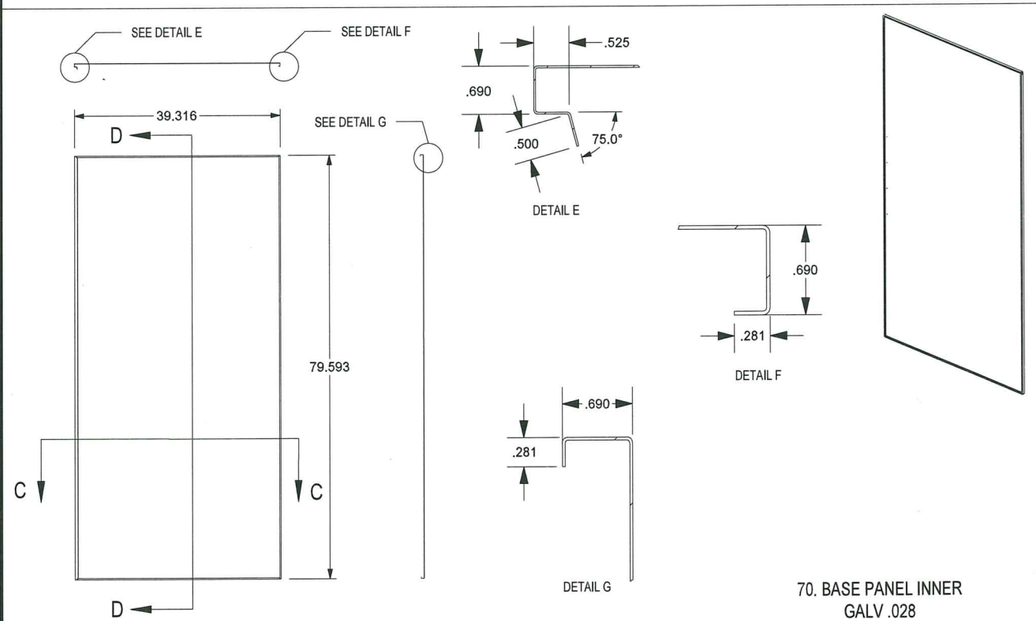

70. BASE PANEL INNER
GALV .028

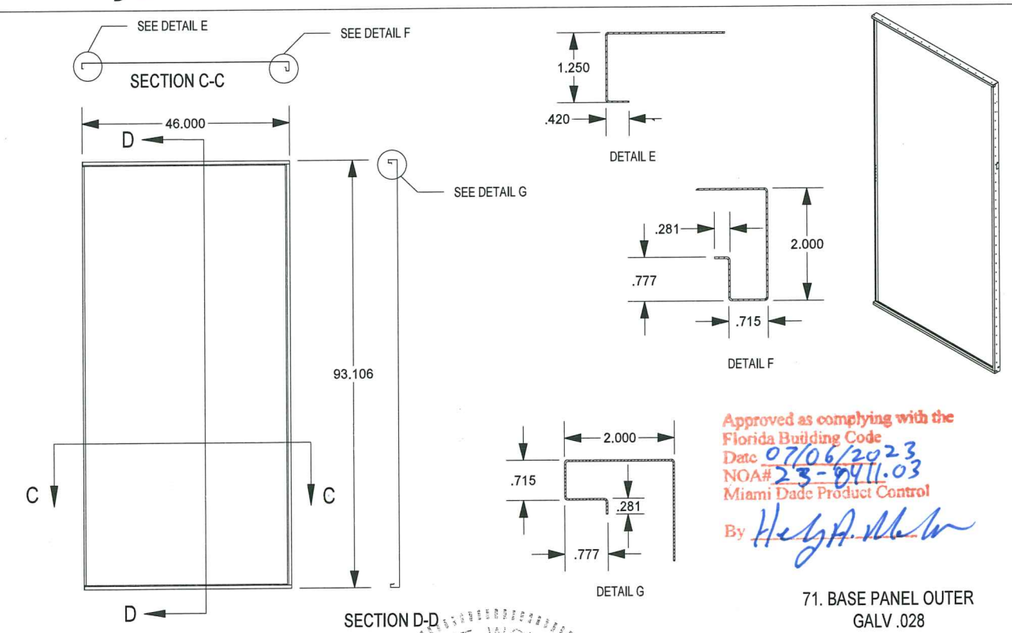

Approved as complying with the
Florida Building Code
Date 07/06/2023
NOA# 23-0411.03
Miami Dade Product Control
By

71. BASE PANEL OUTER
GALV .028

DRAWING # S65380496	DESC. TRANE PERFORMANCE CLIMATE CHANGER AIR HANDLER – HURRICANE UNIT	TRANE US Inc.	SCOTT WOLTERS FL PE# 62354 WOLTERS ENGINEERING (COA# 27494) 15211 97TH ROAD N WEST PALM BEACH, FL 33412 PH/FAX:(561) 225-1982	REVISION HISTORY	REV.
SHEET 36 OF 40	SECTION		SEAL: SCOTT WOLTERS LICENSE No 62354 STATE OF FLORIDA PROFESSIONAL ENGINEER MAR 20 2023	BY / ECT#	REV DATE

4 3 2 1

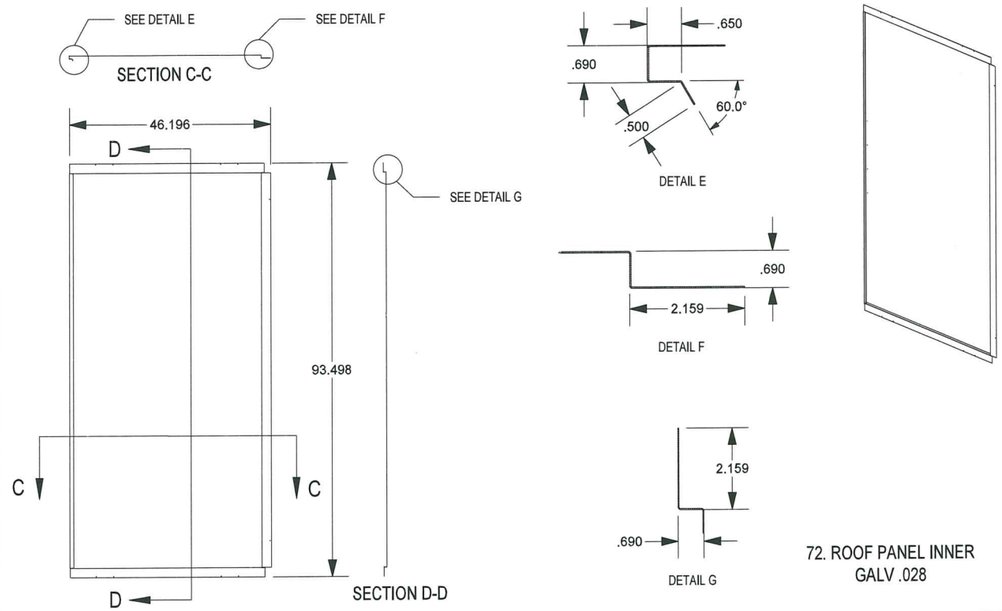

72. ROOF PANEL INNER
GALV .028

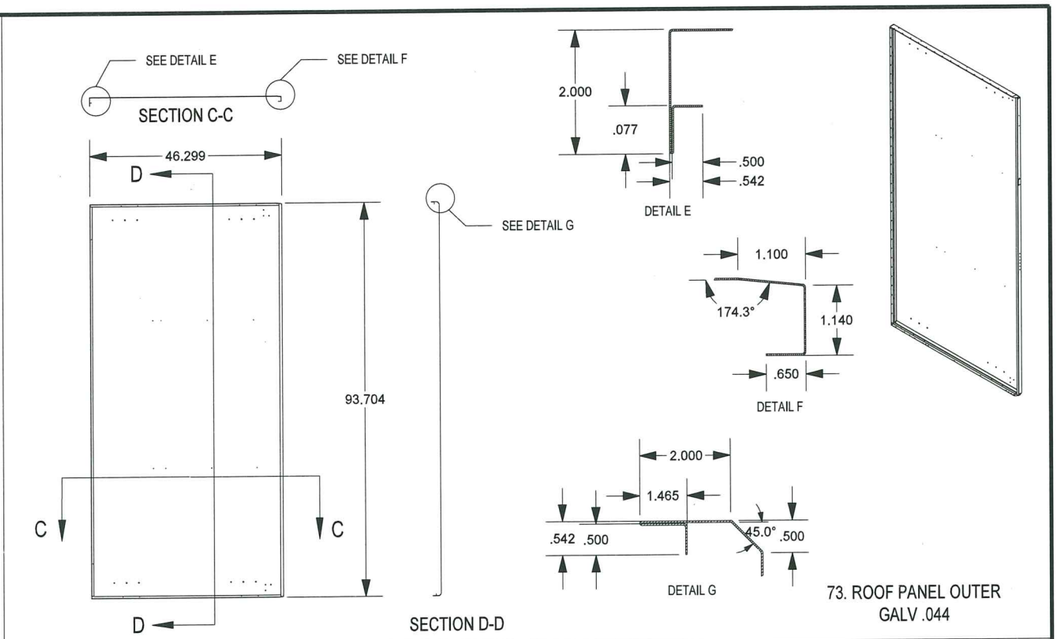

73. ROOF PANEL OUTER
GALV .044

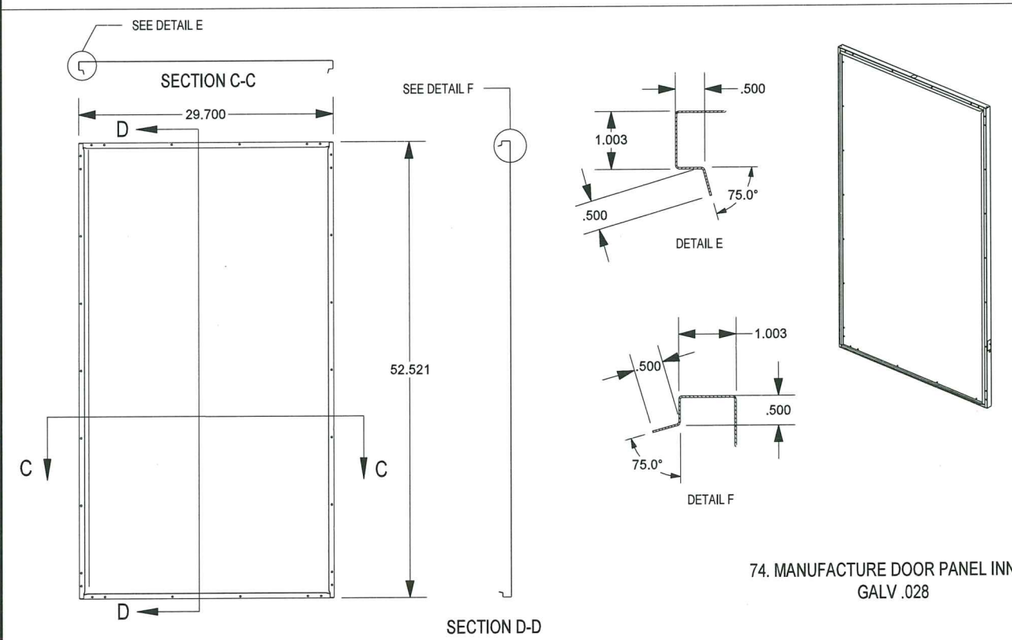

74. MANUFACTURE DOOR PANEL INNER
GALV .028

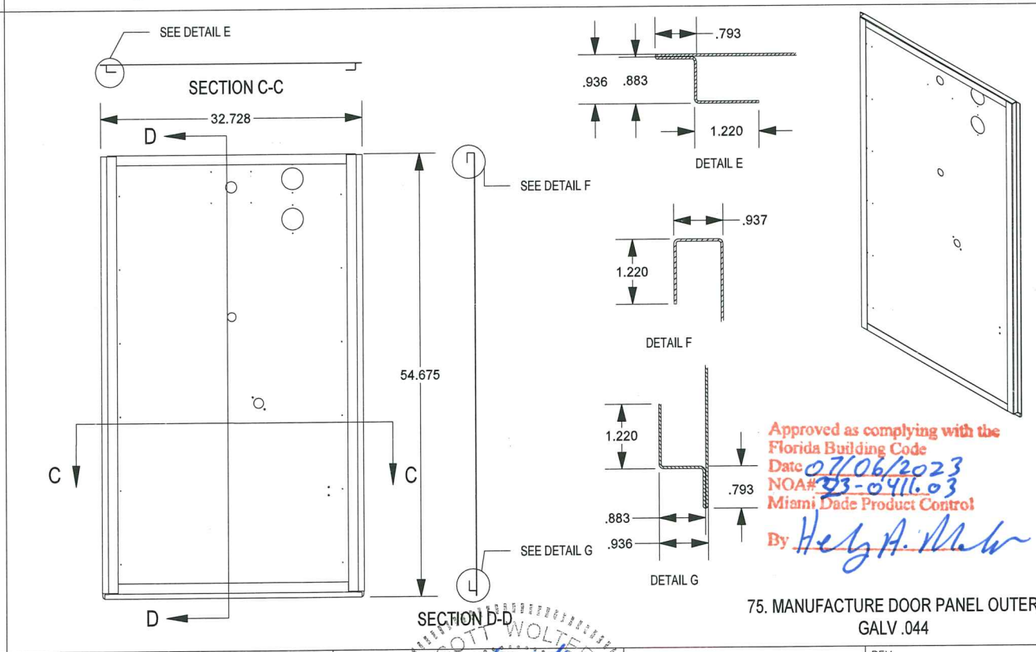

75. MANUFACTURE DOOR PANEL OUTER
GALV .044

Approved as complying with the
Florida Building Code
Date 07/06/2023
NOA# 23-0411.03
Miami Dade Product Control
By Hely A. Muñoz

DRAWING # S65380496	DESC. TRANE PERFORMANCE CLIMATE CHANGER AIR HANDLER – HURRICANE UNIT	TRANE US Inc.	SCOTT WOLTERS FL PE# 62354 WOLTERS ENGINEERING (COA# 27194) 15211 97TH ROAD N WEST PALM BEACH, FL 33412 PH/FAX:(561) 225-1982 SEAL	REVISION HISTORY	REV.
SHEET 37 OF 40	SECTION			BY	ECT#	REV DATE

SCOTT WOLTERS LICENSE No 62354 STATE OF FLORIDA PROFESSIONAL ENGINEER
MAR 20 2023

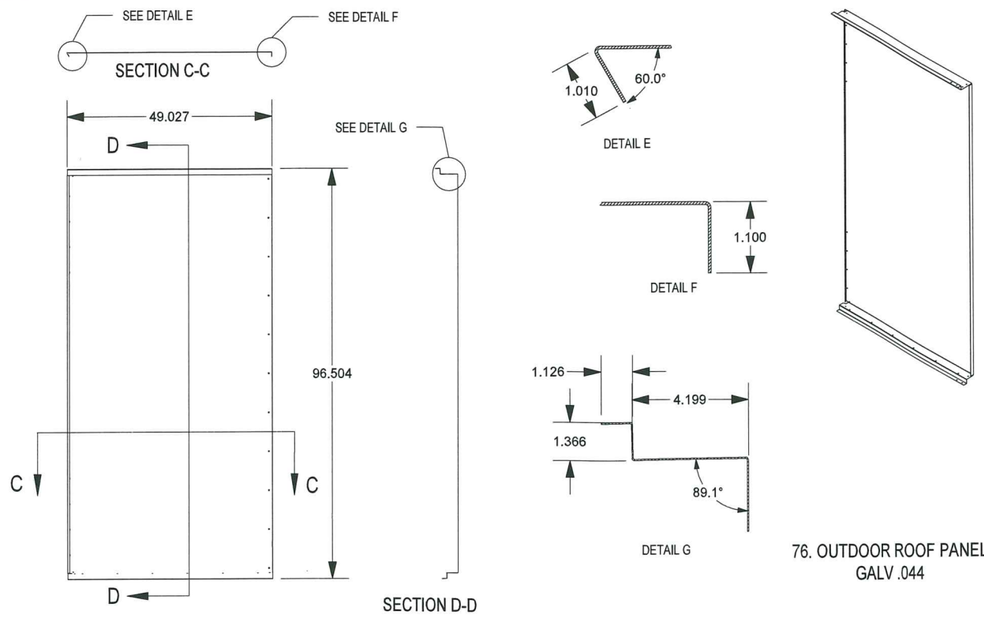

76. OUTDOOR ROOF PANEL
GALV .044

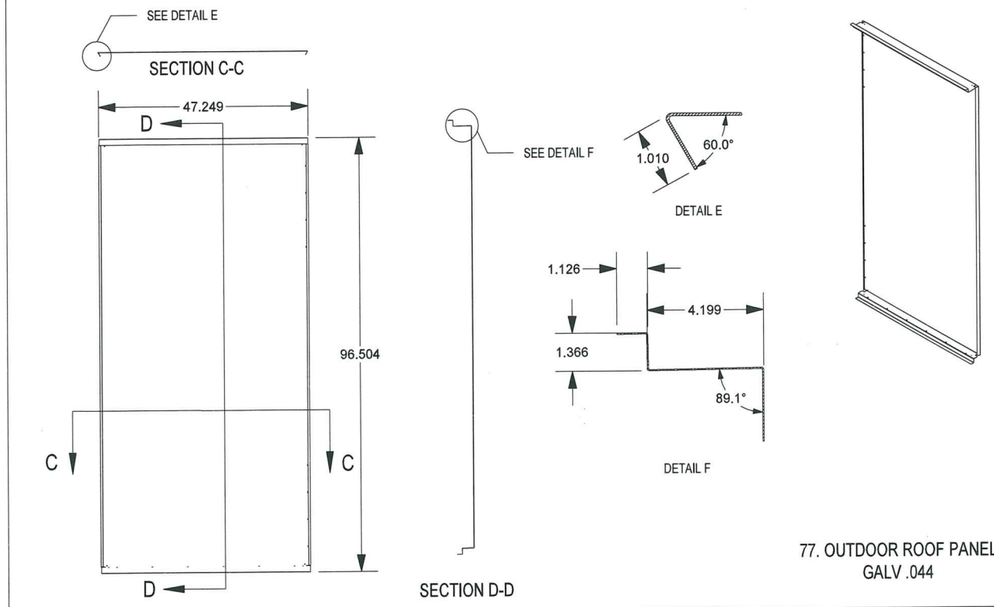

77. OUTDOOR ROOF PANEL
GALV .044

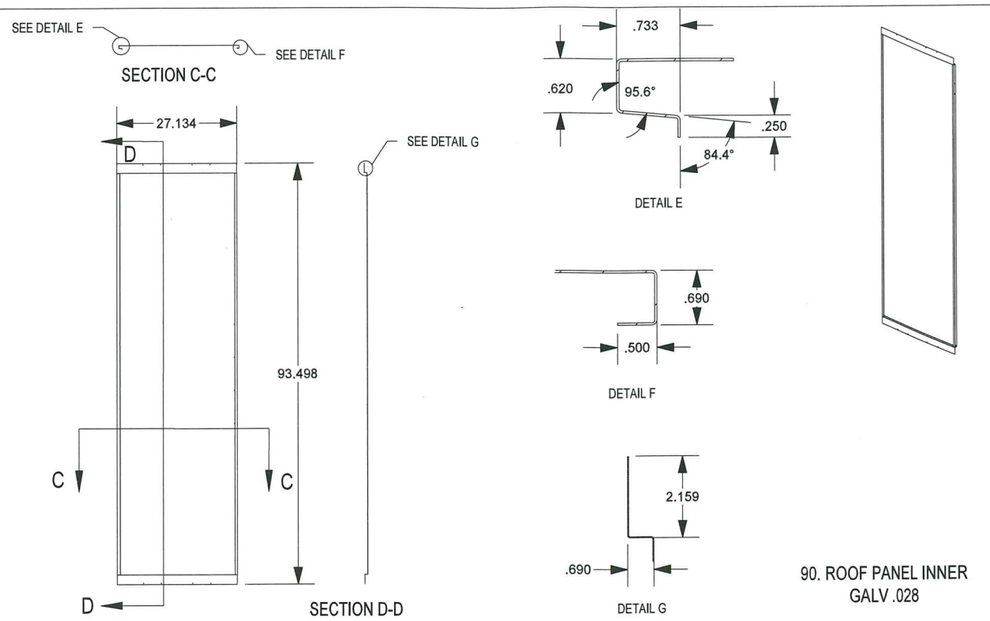

90. ROOF PANEL INNER
GALV .028

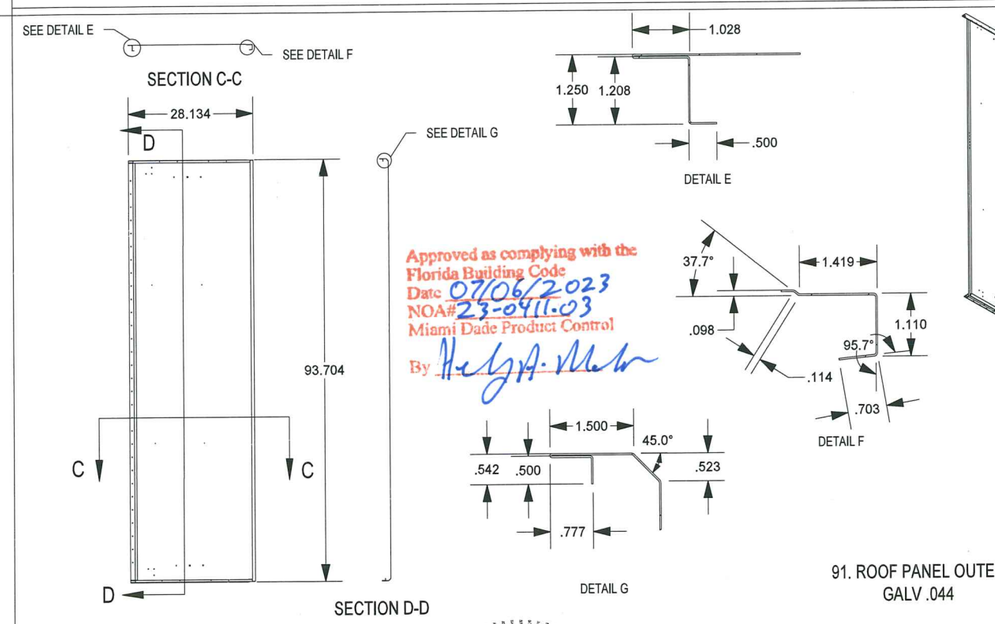

91. ROOF PANEL OUTER
GALV .044

Approved as complying with the
Florida Building Code
Date 07/06/2023
NOA# 23-0411.03
Miami Dade Product Control
By

DRAWING # S65380496	DESC. TRANE PERFORMANCE CLIMATE CHANGER AIR HANDLER – HURRICANE UNIT	TRANE US Inc.	SCOTT WOLTERS FL PE# 62354 WOLTERS ENGINEERING (COA# 27494) 15211 97TH ROAD N WEST PALM BEACH, FL 33412 PH/FAX: (561) 225-1982	SEAL: SCOTT WOLTERS STATE OF FLORIDA No 62354 PROFESSIONAL ENGINEER MAR 20 2023	REVISION HISTORY	REV.
SHEET 38 OF 40	SECTION				BY	ECT#	REV DATE

4 3 2 1

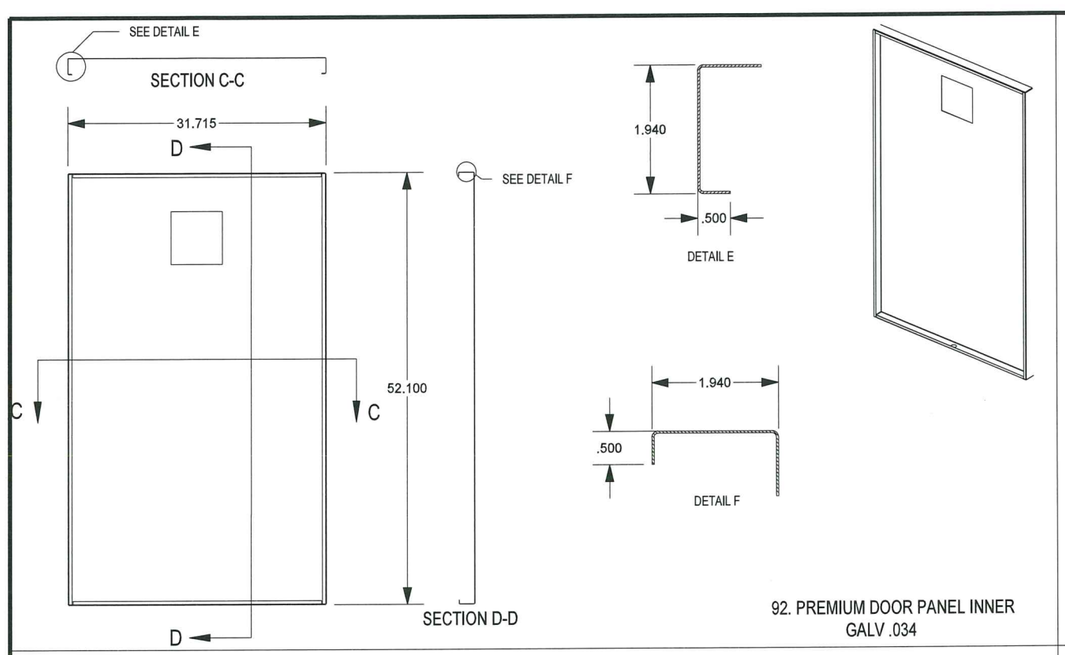

92. PREMIUM DOOR PANEL INNER
GALV .034

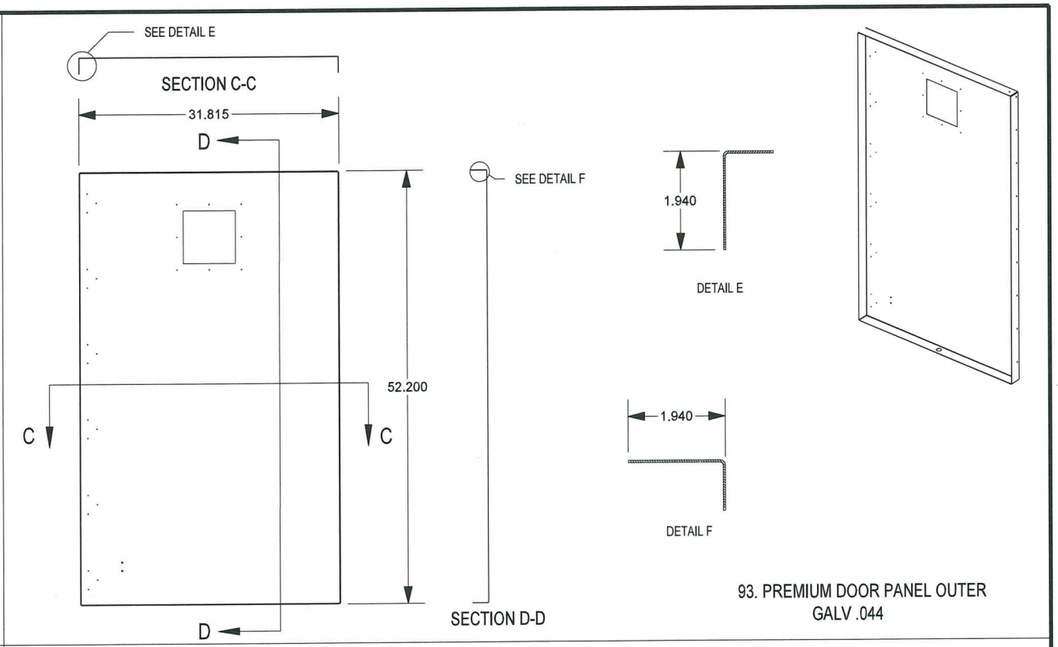

93. PREMIUM DOOR PANEL OUTER
GALV .044

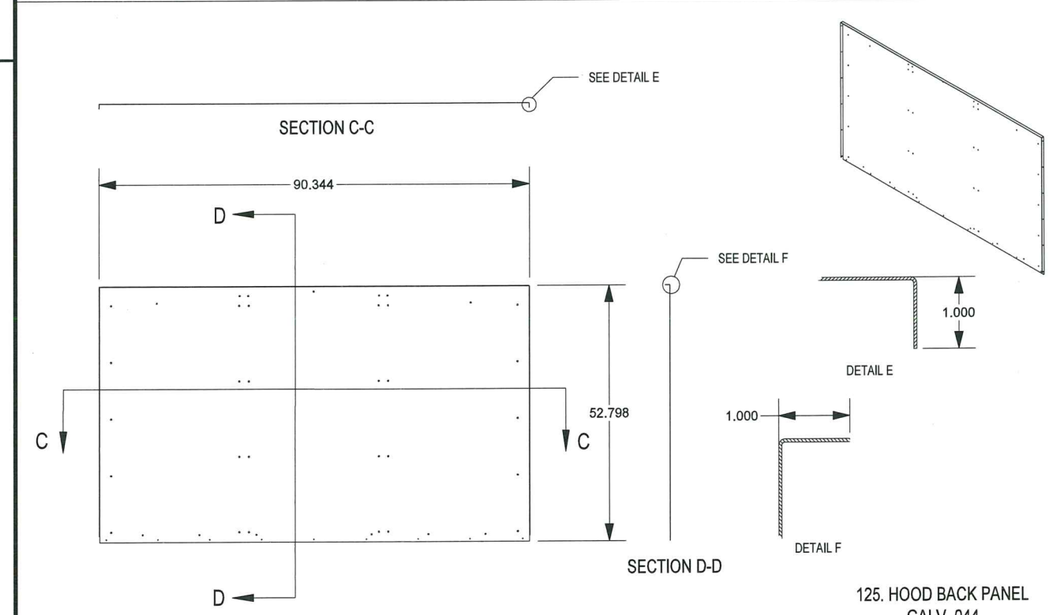

125. HOOD BACK PANEL
GALV .044

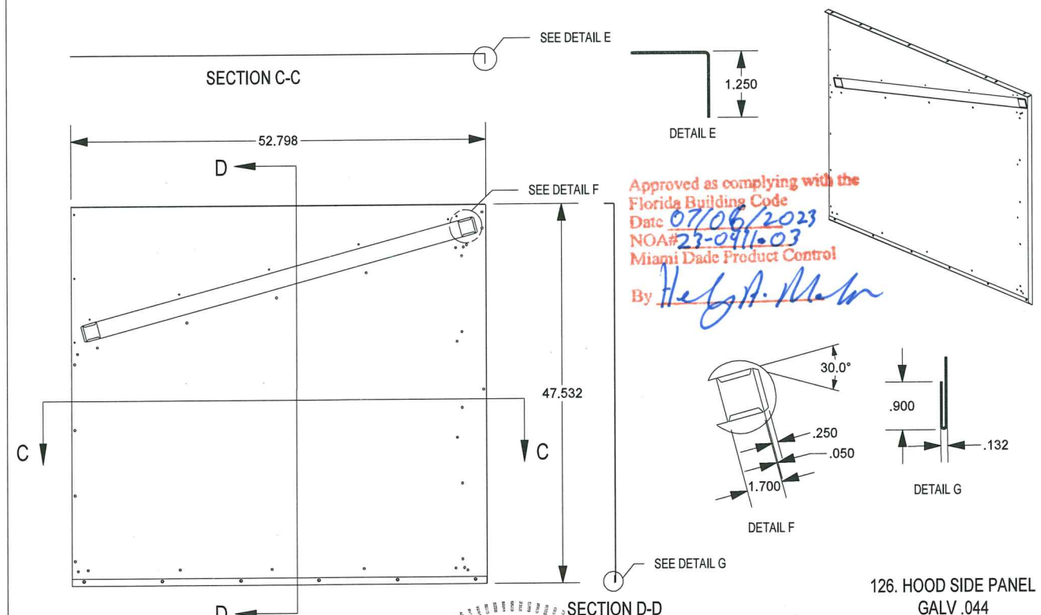

Approved as complying with the
Florida Building Code
Date 07/06/2023
NOA# 23-0911.03
Miami Dade Product Control
By

126. HOOD SIDE PANEL
GALV .044

DRAWING # S65380496	DESC. TRANE PERFORMANCE CLIMATE CHANGER AIR HANDLER – HURRICANE UNIT	TRANE US Inc.	SCOTT WOLTERS FL PE# 62354 WOLTERS ENGINEERING (COA# 27194) 15211 97TH ROAD N WEST PALM BEACH, FL 33412 PH/FAX: (561) 225-1982	REVISION HISTORY	REV.
SHEET 39 OF 40	SECTION		SEAL: SCOTT WOLTERS LICENSE No 62354 STATE OF FLORIDA PROFESSIONAL ENGINEER MAR 20 2023	BY	ECT# / REV DATE

B

A

4 3 2 1

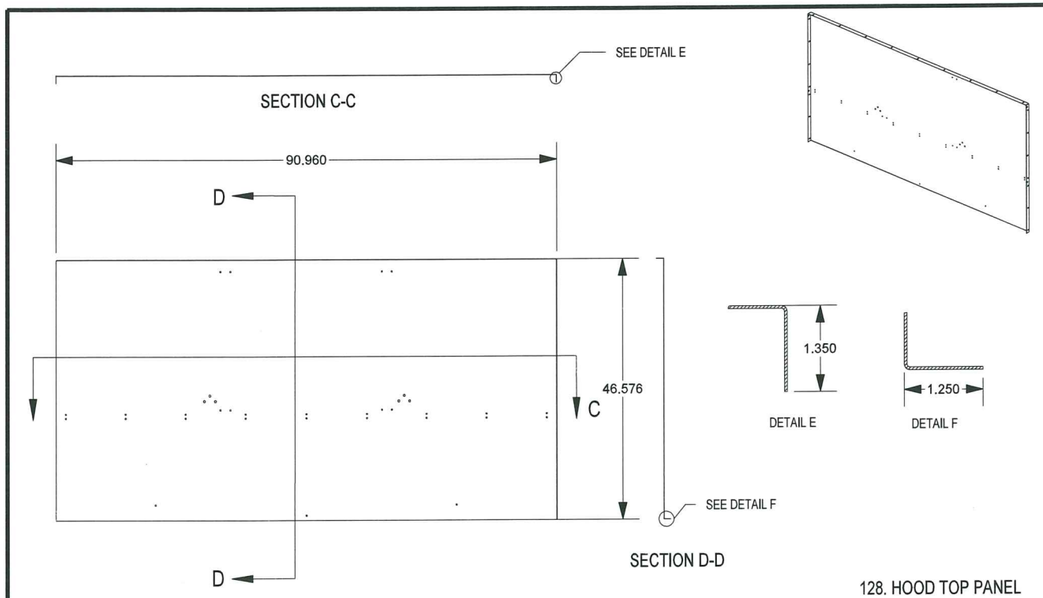

128. HOOD TOP PANEL
GALV .044

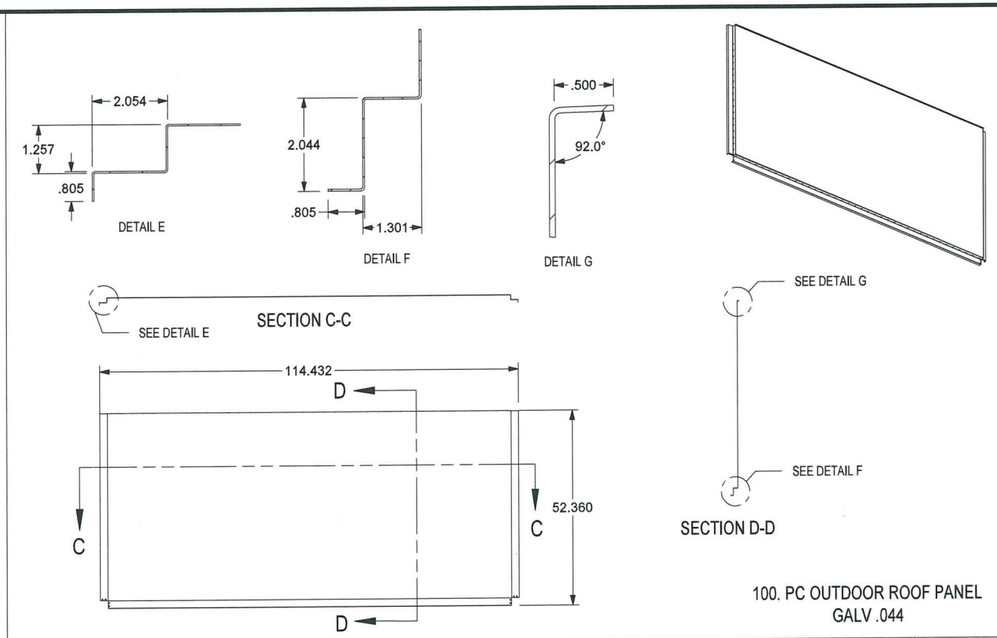

100. PC OUTDOOR ROOF PANEL
GALV .044

Approved as complying with the
Florida Building Code
Date 07/06/2023
NOA# 23-0411.03
Miami Dade Product Control
By

DRAWING # S65380496	DESC. TRANE PERFORMANCE CLIMATE CHANGER AIR HANDLER – HURRICANE UNIT	TRANE US Inc.	SCOTT WOLTERS FL PE# 62354 WOLTERS ENGINEERING (COA# 27184) 15211 97TH ROAD N WEST PALM BEACH, FL 33412 PH/FAX: (561) 225-1982	REVISION HISTORY	REV.
SHEET 40 OF 40	SECTION		SEAL: LICENSE No 62354 STATE OF FLORIDA PROFESSIONAL ENGINEER SCOTT WOLTERS MAR 20 2023	BY	ECT# / REV DATE