MIAMI-DADE COUNTY
DEPARTMENT OF REGULATORY AND ECONOMIC RESOURCES (RER)
BOARD AND CODE ADMINISTRATION DIVISION

MIAMI-DADE COUNTY
PRODUCT CONTROL SECTION
11805 SW 26 Street, Room 208
Miami, Florida 33175-2474
T (786) 315-2590 F (786) 315-2599
www.miamidade.gov/economy

NOTICE OF ACCEPTANCE (NOA)

Florida Pre-Fab, Inc.
2907 S. Sagasta Street
Tampa, Florida 33619

SCOPE:
This NOA is being issued under the applicable rules and regulations governing the use of construction materials. The documentation submitted has been reviewed and accepted by Miami-Dade County RER- Product Control Section to be used in Miami Dade County and other areas where allowed by the Authority Having Jurisdiction (AHJ).

This NOA shall not be valid after the expiration date stated below. The Miami-Dade County Product Control Section (In Miami Dade County) and/or the AHJ (in areas other than Miami Dade County) reserve the right to have this product or material tested for quality assurance purposes. If this product or material fails to perform in the accepted manner, the manufacturer will incur the expense of such testing and the AHJ may immediately revoke, modify, or suspend the use of such product or material within their jurisdiction. RER reserves the right to revoke this acceptance if it is determined by Miami-Dade County Product Control Section that this product or material fails to meet the requirements of the applicable building code.

This product is approved as described herein and has been designed to comply with the High Velocity Hurricane Zone of the Florida Building Code.

DESCRIPTION: "24 ga. Florida Rib Panel" (0.024" min.) Structural Steel Roof Panel

APPROVAL DOCUMENT: Drawing No. 23-065, titled " Florida Rib Panel / Structural Roof Panel ", sheet 1 of 1, prepared by Tilteco, Inc., dated July 05, 2023, last revision #1 dated July 05, 2023, signed and sealed by Walter A. Tillit Jr., P.E., bearing the Miami-Dade County Product Control Revision stamp with the Notice of Acceptance number and the expiration date by the Miami-Dade County Product Control Section.

MISSILE IMPACT RATING: Large and Small Missile Impact Resistant

LABELING: Each panel shall bear a permanent label with the manufacturer's name or logo, city, state and the following statement: "Miami-Dade County Product Control Approved", unless otherwise noted herein.

RENEWAL of this NOA shall be considered after a renewal application has been filed and there has been no change in the applicable building code negatively affecting the performance of this product.

TERMINATION of this NOA will occur after the expiration date or if there has been a revision or change in the materials, use, and/or manufacture of the product or process. Misuse of this NOA as an endorsement of any product, for sales, advertising or any other purposes shall automatically terminate this NOA. Failure to comply with any section of this NOA shall be cause for termination and removal of NOA.

ADVERTISEMENT: The NOA number preceded by the words Miami-Dade County, Florida, and followed by the expiration date may be displayed in advertising literature. If any portion of the NOA is displayed, then it shall be done in its entirety.

INSPECTION: A copy of this entire NOA shall be provided to the user by the manufacturer or its distributors and shall be available for inspection at the job site at the request of the Building Official.

This NOA **revises NOA #22-0330.02** and consists of this page 1, evidence submitted pages E-1, E-2, E-3, E-4, E-5, E-6, E-7 & E-8 as well as approval document mentioned above.
The submitted documentation was reviewed by **Helmy A. Makar, P.E., M.S.**

MIAMI-DADE COUNTY APPROVED

Helmy A. Makar
09/07/2023

NOA No. 23-0726.04
Expiration Date: 06/04/2027
Approval Date: 09/07/2023

Florida Pre-Fab, Inc.

NOTICE OF ACCEPTANCE: EVIDENCE SUBMITTED

1. EVIDENCE SUBMITTED UNDER PREVIOUS APPROVAL # 98-0331.06

A. DRAWINGS

1. *Drawing No. 98-37, prepared by Tilteco Inc., titled "Florida Rib Panel / Structural Roof Panel", dated March 5, 1998, last revision #1 dated July 1, 1998, sheet 1 of 1, signed and sealed by Walter A. Tillit Jr, P.E.*

B. TESTS

1. *Test report on Large Missile Impact Test and Uniform Static Air Pressure Test on Florida Rib Roof Panel, prepared by Hurricane Test Laboratory, Inc., Report No. 0134-0704-97, dated 07/09/97, signed and sealed by Timothy S. Marshall, P.E.*
2. *Test report on Uniform Static Air Pressure Test on Florida Rib Roof Panel, prepared by Hurricane Test Laboratory, Inc., Report No. 0134-0216-98, dated 02/16/98, signed and sealed by Timothy S. Marshall, P.E.*
3. *Susceptibility to leakage test in accordance with Miami-Dade county Protocol PA 114 Appendix G on Florida Rib Roof Panel, prepared by Celotex, Report No. 258255D CAE97271, dated December 22, 1997, signed and sealed by R. G. Miller, P.E.*
4. *Wind Driven Rain Test in accordance with Miami-Dade county Protocol PA 100-95 on Florida Rib Roof Panel, prepared by Celotex, Report No. 258255A CAE97272, dated October 30, 1997, signed and sealed by R. G. Miller, P.E.*
5. *2000 hour Salt Spray Test in accordance with ASTM B117 on Florida Rib Roof Panel, prepared by Sparrows Point Bethlehem, dated September 12, 1997, signed by L. J. Anderson, Q. A. Manager.*
6. *1000 hour Salt Spray Test per ASTM B117 and 2000 hour Accelerated Weathering Test in accordance with ASTM G23 on Florida Rib Roof Panel, prepared by Sequa, dated December 17, 1997, signed by James C. Larsen, Technical Director.*

C. CALCULATIONS

1. *Calculations titled "Florida Pre Fab, Inc.", dated 11/14/97, pages 1 through 19 of 19, prepared by Tilteco , signed and sealed by Walter A. Tillit Jr., P.E.*

D. MATERIAL CERTIFICATIONS

1. *Mill Certified Test Report issued by Bethlehem Steel Corporation, dated 02/12/97, with chemical composition and mechanical properties of galvalume steel.*
2. *Tensile Test Report No. 7JM-2301, prepared by QC Metallurgical, Inc., dated 10/16/97, signed and sealed by Frank Grate, P.E.*

Helmy A. Makar, P.E., M.S.
Product Control Section Supervisor
NOA No. 23-0726.04
Expiration Date: 06/04/2027
Approval Date: 09/07/2023

NOTICE OF ACCEPTANCE: EVIDENCE SUBMITTED

2. EVIDENCE SUBMITTED UNDER PREVIOUS APPROVAL # 01-0725.02

A. DRAWINGS

1. See NOA 98-0331.06

B. TESTS

1. See NOA 98-0331.06

C. CALCULATIONS

1. See NOA 98-0331.06

D. MATERIAL CERTIFICATIONS

1. See NOA 98-0331.06

E. OTHER

1. NOA No98-0331.06

2. Letter from Manufacturer

3. EVIDENCE SUBMITTED UNDER PREVIOUS APPROVAL #03-0106-23

A. DRAWINGS

1. Drawing No. 02-517, titled " Florida Rib Panel / Structural Roof Panel ", sheet 1 of 1, prepared by Tilteco, Inc., dated November 08, 2002, last revision #1 dated November 08, 2002, signed and sealed by Walter A. Tillit, Jr., P.E.

B. TESTS

1. None.

C. CALCULATIONS

1. None.

D. MATERIAL CERTIFICATIONS

1. None.

E. STATEMENTS

1. Letter issued by Mr. Walter A. Tillit, Jr., P.E., dated December 16, 2002, indicating that the only change is update General Note numbers 1 & 7 to reference the Florida Building Code and ASCE 7-98.

Helmy A. Makar, P.E., M.S.
Product Control Section Supervisor
NOA No. 23-0726.04
Expiration Date: 06/04/2027
Approval Date: 09/07/2023

NOTICE OF ACCEPTANCE: EVIDENCE SUBMITTED

4. EVIDENCE SUBMITTED UNDER PREVIOUS APPROVAL # 05-0818.03

A. DRAWINGS

1. *Drawing No. 05-245, titled " Florida Rib Panel / Structural Roof Panel ", sheet 1 of 1, prepared by Tilteco, Inc., dated August 15, 2005, last revision #1 dated August 15, 2005, signed and sealed by Walter A. Tillit Jr., P.E.*

B. TESTS

1. *None.*

C. CALCULATIONS

1. *Calculations titled "Florida Pre Fab, Inc.", dated August 12, 2005, 2 pages, prepared by Tilteco, Inc., signed and sealed by Walter A. Tillit Jr., P.E.*

D. QUALITY ASSURANCE

1. *By Miami-Dade County Building Code Compliance Office.*

E. MATERIAL CERTIFICATIONS

1. *None.*

5. EVIDENCE SUBMITTED UNDER PREVIOUS APPROVAL #06-0501.05

A. DRAWINGS

1. *None.*

B. TESTS

1. *None.*

C. CALCULATIONS

1. *None.*

D. QUALITY ASSURANCE

1. *By Miami-Dade County Building Code Compliance Office.*

E. MATERIAL CERTIFICATIONS

1. *None.*

6. EVIDENCE SUBMITTED UNDER PREVIOUS APPROVAL # 07-0606.05

A. DRAWINGS

1. *Drawing No. 07-146, titled " Florida Rib Panel / Structural Roof Panel ", sheet 1 of 1, prepared by Tilteco, Inc., dated June 01, 2007, last revision #1 dated June 01, 2007, signed and sealed by Walter A. Tillit Jr., P.E.*

Helmy A. Makar, P.E., M.S.
Product Control Section Supervisor
NOA No. 23-0726.04
Expiration Date: 06/04/2027
Approval Date: 09/07/2023

B. TESTS

1. *Test report on Large Missile Impact Test, Cyclic Load Test and Uniform Static Air Pressure Test on Florida Rib Roof Panel, prepared by Hurricane Test Laboratory, Inc., Report No. 0134-0502-07, dated 05/09/2007, signed and sealed by Vinu J. Abraham, P.E.*

C. CALCULATIONS

1. *None.*

D. QUALITY ASSURANCE

1. *By Miami-Dade County Building Code Compliance Office.*

E. MATERIAL CERTIFICATIONS

1. *None.*

7. EVIDENCE SUBMITTED UNDER PREVIOUS APPROVAL # 09-0323.20

A. DRAWINGS

1. *Drawing No. 09-022, titled " Florida Rib Panel / Structural Roof Panel ", sheet 1 of 1, prepared by Tilteco, Inc., dated March 02, 2009, last revision #1 dated March 02, 2009, signed and sealed by Walter A. Tillit Jr., P.E.*

B. TESTS

1. *None.*

C. CALCULATIONS

1. *None.*

D. QUALITY ASSURANCE

1. *By Miami-Dade County Building Code Compliance Office.*

E. MATERIAL CERTIFICATIONS

1. *Letter issued by Mr. Walter A. Tillit, Jr., P.E., dated March 17, 2009, indicating that the only change is update General Note number 1 to reference the Florida Building Code 2007.*

8. EVIDENCE SUBMITTED UNDER PREVIOUS APPROVAL #12-0206.05

A. DRAWINGS

1. *Drawing No. 11-129, titled " Florida Rib Panel / Structural Roof Panel ", sheet 1 of 1, prepared by Tilteco, Inc., dated November 21, 2011, last revision #1 dated November 21, 2011, signed and sealed by Walter A. Tillit Jr., P.E.*

Helmy A. Makar, P.E., M.S.
Product Control Section Supervisor
NOA No. 23-0726.04
Expiration Date: 06/04/2027
Approval Date: 09/07/2023

B. TESTS

1. *None.*

C. CALCULATIONS

1. *None.*

D. QUALITY ASSURANCE

1. *By Miami-Dade County Department of Permitting, Environment, and Regulatory Affairs.*

E. MATERIAL CERTIFICATIONS

1. *None.*

F. OTHERS

1. *Letter prepared by Tilteco, Inc., dated December 21, 2011, signed and sealed by Walter A. Tillit Jr., P.E., certifies that this roof panel is in compliance with the Florida Building Code, 2010 Edition.*

9. EVIDENCE SUBMITTED UNDER PREVIOUS APPROVAL #15-0420.10

A. DRAWINGS

1. *Drawing No. 15-094, titled " Florida Rib Panel / Structural Roof Panel ", sheet 1 of 1, prepared by Tilteco, Inc., dated April 10, 2015, last revision #1 dated April 10, 2015, signed and sealed by Walter A. Tillit Jr., P.E.*

B. TESTS

1. *None.*

C. CALCULATIONS

1. *None.*

D. QUALITY ASSURANCE

1. *By Miami-Dade County Department of Regulatory and Economic Resources (RER).*

E. MATERIAL CERTIFICATIONS

1. *None.*

F. OTHERS

1. *Letter prepared by Tilteco, Inc., dated April 10, 2015, signed and sealed by Walter A. Tillit Jr., P.E., certifies that this roof panel is in compliance with the Florida Building Code, 2014 Edition.*

Helmy A. Makar, P.E., M.S.
Product Control Section Supervisor
NOA No. 23-0726.04
Expiration Date: 06/04/2027
Approval Date: 09/07/2023

10. EVIDENCE SUBMITTED UNDER PREVIOUS APPROVAL #17-0315.03

A. DRAWINGS

1. *None.*

B. TESTS

1. *None.*

C. CALCULATIONS

1. *None.*

D. QUALITY ASSURANCE

1. *By Miami-Dade County Department of Regulatory and Economic Resources (RER).*

E. MATERIAL CERTIFICATIONS

1. *None.*

11. EVIDENCE SUBMITTED UNDER PREVIOUS APPROVAL #17-0823.04

A. DRAWINGS

1. *Drawing No. 17-113, titled " Florida Rib Panel / Structural Roof Panel ", sheet 1 of 1, prepared by Tilteco, Inc., dated July 31, 2017, last revision #1 dated July 31, 2017, signed and sealed by Walter A. Tillit Jr., P.E.*

B. TESTS

1. *None.*

C. CALCULATIONS

1. *None.*

D. QUALITY ASSURANCE

1. *By Miami-Dade County Department of Regulatory and Economic Resources (RER).*

E. MATERIAL CERTIFICATIONS

1. *None.*

F. OTHERS

1. *Letter prepared by Tilteco, Inc., dated July 31, 2017, signed and sealed by Walter A. Tillit Jr., P.E., certifies that this roof panel is in compliance with the Florida Building Code, 2014 Edition and 2017 Edition.*

Helmy A. Makar, P.E., M.S.
Product Control Section Supervisor
NOA No. 23-0726.04
Expiration Date: 06/04/2027
Approval Date: 09/07/2023

NOTICE OF ACCEPTANCE: EVIDENCE SUBMITTED

12. EVIDENCE SUBMITTED UNDER PREVIOUS APPROVAL #20-0811.18

A. DRAWINGS

1. *Drawing No. 20-194, titled " Florida Rib Panel / Structural Roof Panel ", sheet 1 of 1, prepared by Tilteco, Inc., dated July 13, 2020, last revision #1 dated July 13, 2020, signed and sealed by Walter A. Tillit Jr., P.E.*

B. TESTS

1. *None.*

C. CALCULATIONS

1. *None.*

D. QUALITY ASSURANCE

1. *By Miami-Dade County Department of Regulatory and Economic Resources (RER).*

E. MATERIAL CERTIFICATIONS

1. *None.*

F. OTHERS

1. *Letter prepared by Tilteco, Inc., dated July 20, 2020, signed and sealed by Walter A. Tillit Jr., P.E., certifies that this roof panel is in compliance with the Florida Building Code, 2020 Edition.*

13. EVIDENCE SUBMITTED UNDER PREVIOUS APPROVAL #22-0330.02

A. DRAWINGS

1. *None.*

B. TESTS

1. *None.*

C. CALCULATIONS

1. *None.*

D. QUALITY ASSURANCE

1. *By Miami-Dade County Department of Regulatory and Economic Resources (RER).*

E. MATERIAL CERTIFICATIONS

1. *None.*

F. OTHERS

1. *FBC, 2020 Edition compliance Letter from Tilteco, Inc., dated 07/20/20, signed and sealed by Walter A. Tillit Jr., P.E.*

Helmy A. Makar, P.E., M.S.
Product Control Section Supervisor
NOA No. 23-0726.04
Expiration Date: 06/04/2027
Approval Date: 09/07/2023

14. NEW EVIDENCE SUBMITTED

A. DRAWINGS

1. *Drawing No. 23-065, titled " Florida Rib Panel / Structural Roof Panel ", sheet 1 of 1; prepared by Tilteco, Inc., dated July 05, 2023, last revision #1 dated July 05, 2023, signed and sealed by Walter A. Tillit Jr., P.E.*

B. TESTS

1. *None.*

C. CALCULATIONS

1. *None.*

D. QUALITY ASSURANCE

1. *By Miami-Dade County Department of Regulatory and Economic Resources (RER).*

E. MATERIAL CERTIFICATIONS

1. *None.*

F. OTHERS

1. *Letter prepared by Tilteco, Inc., dated July 05, 2023, signed and sealed by Walter A. Tillit Jr., P.E., certifies that this roof panel is in compliance with the Florida Building Code, 2020 Edition and 2023 Edition..*

Helmy A. Makar, P.E., M.S.
Product Control Section Supervisor
NOA No. 23-0726.04
Expiration Date: 06/04/2027
Approval Date: 09/07/2023

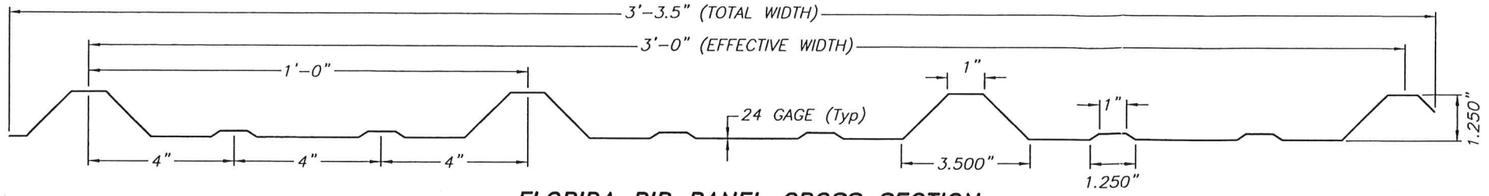

FLORIDA RIB PANEL CROSS SECTION

SCALE : 1/4" = 1"

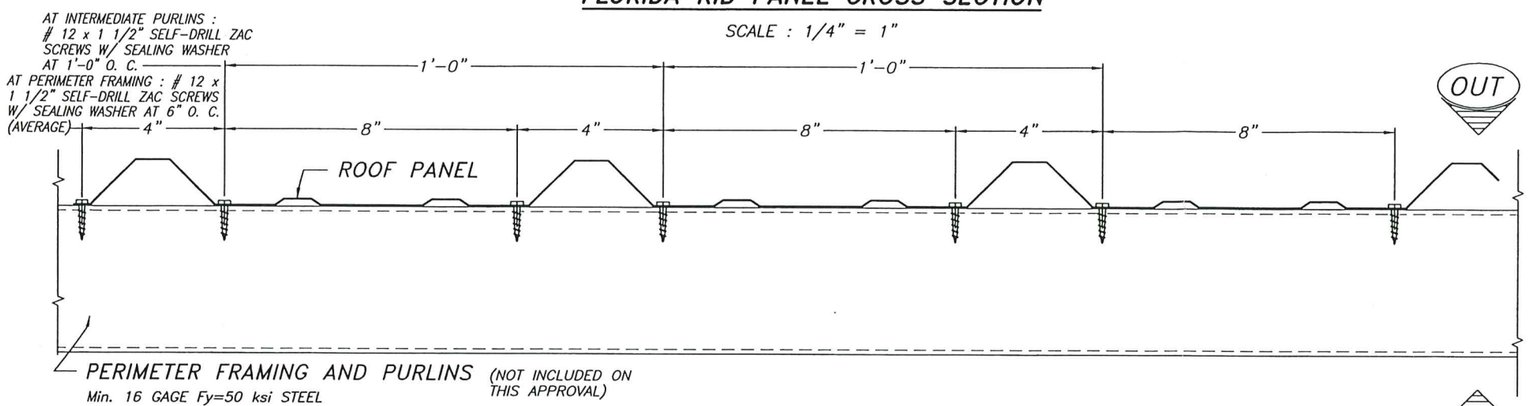

TYPICAL ROOF PANEL CONNECTION DETAIL TO INTERMEDIATE AND END SUPPORT (SECTION)

SCALE : 1/4" = 1"

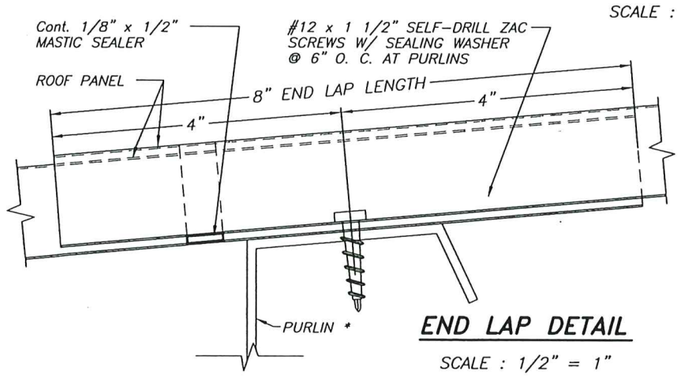

END LAP DETAIL

SCALE : 1/2" = 1"

* (NOT PART OF THIS APPROVAL)

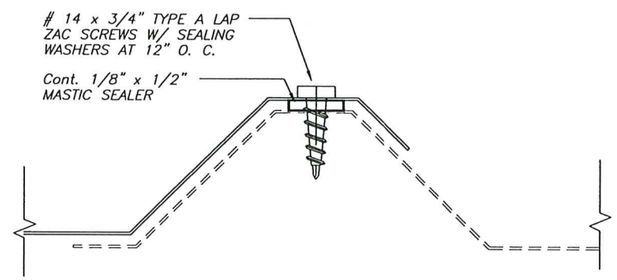

TYPICAL ROOF PANEL SIDE LAP DETAIL (SECTION)

SCALE : 3/4" = 1"

MAXIMUM A.S.D. DESIGN PRESSURE RATING (p. s. f.) AND CORRESPONDING MAXIMUM ROOF PANEL SPAN "L" (Ft) SCHEDULE

PANEL SUPPORT CONDITION	MAXIMUM A.S.D. DESIGN PRESSURE RATING (psf) PANEL SPAN "L" (FT) 3'-0"	4'-0"
L L	+ 57.2, − 66.0	+ 39.0, − 49.5
L L L	+ 65.0, − 75.0	+ 48.8, − 56.3
L L L L	+ 62.6, − 72.2	+ 45.6, − 54.1

PRODUCT REVISED
as complying with the Florida Building Code
Acceptance No 23-0726.04
Expiration Date 06/04/2027
By Helga A. Nah
Miami Dade Product Control

WALTER A. TILLIT JR. LICENSE No. 44167 STATE OF FLORIDA PROFESSIONAL ENGINEER
7/5/2023

GENERAL NOTES:

1. STRUCTURAL ROOF PANEL SHOWN ON THIS PRODUCT APPROVAL DOCUMENT HAS BEEN VERIFIED FOR COMPLIANCE IN ACCORDANCE WITH THE **2023 (8th EDITION)** AND **2020 (7th EDITION)** OF THE FLORIDA BUILDING CODE.

DESIGN WIND LOADS SHALL BE DETERMINED AS PER SECTION **1620** OF THE ABOVE MENTIONED CODES, USING **ASCE 7-22 (FBC 2023) AND ASCE 7-16 (FBC 2020)** SHALL NOT EXCEED THE MAXIMUM (A.S.D.) DESIGN PRESSURE RATINGS INDICATED ON THIS SHEET.

IN ORDER TO VERIFY THE ABOVE CONDITION, ULTIMATE DESIGN WIND LOADS DETERMINED PER ASCE 7-22 AND ASCE 7-16 SHALL BE FIRST REDUCED TO A.S.D. DESIGN WIND LOADS BY MULTIPLYING THEM BY 0.6 IN ORDER TO COMPARE THESE W/ MAX. (A.S.D) DESIGN PRESSURE RATINGS INDICATED ON THIS SHEET.

IN ORDER TO VERIFY THAT FASTENERS, AS TESTED, WERE NOT OVERSTRESSED AN 33% INCREASE IN ALLOWABLE STRESSES WAS **NOT** USED IN THEIR ANALYSIS.

STRUCTURAL ROOF PANEL'S ADEQUACY FOR IMPACT AND FATIGUE RESISTANCE HAS BEEN VERIFIED IN ACCORDANCE WITH SECTION 1626 OF THE ABOVE MENTIONED CODES.

2. ALL STEEL SHEET METAL ROOF PANELS SHALL HAVE STRUCTURAL QUALITY ASTM A-792, WITH A MINIMUM COATING THICKNESS AS PER ASTM AZ-55 DESIGNATION, AND WITH MINIMUM Fy=50 ksi (AFTER ROLLED).

3. THIS ROOF CAN BE INSTALLED AT ANY ROOF SLOPE. THIS PANEL **CANNOT BE INSTALLED AT ROOFS WITH VALLEYS.**

4. ALL SCREWS TO BE HEX HEAD, SELF DRILLING, NON CORROSIVE "ZAC" SCREWS AS MANUFACTURED BY CONSTRUCTION FASTENERS, INC., WYOMISSING, PA 19610 AND SHALL COMPLY W/ FLORIDA BUILDING CODE SECTION 2411.3.3.4.

5. ALL ROOF PANEL SIDELAPS AND ENDLAPS SHALL HAVE A CONTINUOUS STRIP OF MASTIC SEALER. MASTIC SEALER SHALL BE GULF-SEAL MB 10A BUTYL RUBBER TAPE AS MANUFACTURED BY GULF-SEAL SPECIALTIES, INC. OR EQUAL.

6. ALL GUTTER ENDLAPS SHALL HAVE A 1/4" BEAD OF GUTTER SEAL. RIDGE FLASHING LAPS, DOWNSPOUT OUTLETS AND GUTTER ENDCAPS SHALL HAVE A 1 1/4" BEAD OF GUTTER SEAL (15' COVER PER 5 OZ. TUBE).

7. (A) THIS PRODUCT APPROVAL DOCUMENT (P.A.D.) PREPARED BY THIS ENGINEER IS GENERIC AND DOES NOT PROVIDE INFORMATION FOR A SITE SPECIFIC PROJECT; i.e. WHERE THE SITE CONDITIONS DEVIATE FROM THE P.A.D.

(B) CONTRACTOR TO BE RESPONSIBLE FOR THE SELECTION, PURCHASE AND INSTALLATION OF THIS PRODUCT BASED ON THIS PRODUCT APPROVAL PROVIDED HE/SHE DOES NOT DEVIATE FROM THE CONDITIONS DETAILED ON THIS DOCUMENT.

(C) THIS PRODUCT APPROVAL DOCUMENT WILL BE CONSIDERED INVALID IF MODIFIED.

(D) SITE SPECIFIC PROJECTS SHALL BE PREPARED BY A FLORIDA REGISTERED ENGINEER OR ARCHITECT WHICH WILL BECOME THE PROFESSIONAL OF RECORD (P.O.R) FOR THE PROJECT AND WHO WILL BE RESPONSIBLE FOR THE PROPER USE OF THE P.A.D.

(E) THIS P.A.D. SHALL COMPLY WITH SECTION 2: 61G15 OF THE FLORIDA ADMINISTRATIVE CODE.

8. ROOF PANEL'S MANUFACTURER'S LABEL SHALL BE PLACED AT BOTTOM OF EACH PANEL. LABEL SHALL COMPLY W/ SECTION 1703.5 OF THE FLORIDA BUILDING CODE.

THIS DRAWING SHALL ONLY BE USED TO OBTAIN PERMITS IN THE STATE OF FLORIDA

FLORIDA BUILDING CODE (HIGH VELOCITY HURRICANE ZONE)

© 2023 TILTECO INC.

TILTECO INC.
TILLIT TESTING & ENGINEERING COMPANY
6355N.W. 36th. St., Ste. 305, VIRGINIA GARDENS, Fl. 33166
Phone : (305)871-1530 . Fax : (305)871-1531
e-mail: tilteco@aol.com
CA-0006719
WALTER A. TILLIT Jr. P.E.
FLORIDA Lic. # 44167

FLORIDA RIB PANEL / STRUCTURAL ROOF PANEL

FLORIDA PRE-FAB, INC.
2907 S. SAGASTA STREET,
TAMPA, FLORIDA 33619
PHONE: (813) 247-3934
FAX: (813) 247-3936

REV. No	DESCRIPTION	DATE	REV. No	DESCRIPTION	DATE
1	OLD 20-194	7/5/2023	3		
2			4		

Y.M.
DRAWN BY:

7/5/2023
DATE

23-065
DRAWING No

SHEET 1 OF 1