MIAMI–DADE COUNTY, FLORIDA
PRODUCT CONTROL SECTION
11805 SW 26 Street, Room 208
Miami, Florida 33175-2474
T (786) 315-2590 F (786) 315-2599
www.miamidade.gov/building

DEPARTMENT OF REGULATORY AND ECONOMIC RESOURCES (RER)
BOARD AND CODE ADMINISTRATION DIVISION

NOTICE OF ACCEPTANCE (NOA)

PGT Industries, Inc.
1070 Technology Drive
North Venice, FL 34275

SCOPE:

This NOA is being issued under the applicable rules and regulations governing the use of construction materials. The documentation submitted has been reviewed and accepted by Miami-Dade County RER - Product Control Section to be used in Miami Dade County and other areas where allowed by the Authority Having Jurisdiction (AHJ).

This NOA shall not be valid after the expiration date stated below. The Miami-Dade County Product Control Section (In Miami-Dade County) and/or the AHJ (in areas other than Miami-Dade County) reserve the right to have this product or material tested for quality assurance purposes. If this product or material fails to perform in the accepted manner, the manufacturer will incur the expense of such testing and the AHJ may immediately revoke, modify, or suspend the use of such product or material within their jurisdiction. RER reserves the right to revoke this acceptance, if it is determined by Miami–Dade County Product Control Section that this product or material fails to meet the requirements of the applicable building code.

This product is approved as described herein and has been designed to comply with the Florida Building Code, including the High Velocity Hurricane Zone.

DESCRIPTION: Series "DH-5560" PVC Double Hung Window – L.M.I.

APPROVAL DOCUMENT: Drawing No. **MD-DH5560-01** titled "Double Hung Install (LM)", sheets 1 through 14 of 14, dated 05/15/15, with revision **D** on 08/10/23, prepared by manufacturer, signed and sealed by Anthony Lynn Miller, P.E., bearing the Miami-Dade County Product Control Revision stamp with the Notice of Acceptance number and expiration date by the Miami-Dade County Product Control Section.

MISSILE IMPACT RATING: Large and Small Missile Impact Resistant

LABELING: Each unit shall bear a permanent label with the manufacturer's name or logo, city, state, model/series, and following statement: "Miami-Dade County Product Control Approved", unless otherwise noted herein.

RENEWAL of this NOA shall be considered after a renewal application has been filed and there has been no change in the applicable building code negatively affecting the performance of this product.

TERMINATION of this NOA will occur after the expiration date or if there has been a revision or change in the materials, use, and/or manufacture of the product or process. Misuse of this NOA as an endorsement of any product, for sales, advertising or any other purposes shall automatically terminate this NOA. Failure to comply with any section of this NOA shall be cause for termination and removal of NOA.

ADVERTISEMENT: The NOA number preceded by the words Miami-Dade County, Florida, and followed by the expiration date may be displayed in advertising literature. If any portion of the NOA is displayed, then it shall be done in its entirety.

INSPECTION: A copy of this entire NOA shall be provided to the user by the manufacturer or its distributors and shall be available for inspection at the job site at the request of the Building Official.

This NOA **revises NOA No. 20-0401.06** and consists of this page 1 and evidence pages E-1, E-2, E-3 and E-4, as well as approval document mentioned above.

The submitted documentation was reviewed by **Manuel Perez, P.E.**

MIAMI-DADE COUNTY APPROVED

9/5/23

NOA No. 23-0816.18
Expiration Date: September 17, 2025
Approval Date: September 14, 2023

PGT Industries, Inc.

NOTICE OF ACCEPTANCE: EVIDENCE SUBMITTED

1. EVIDENCE SUBMITTED UNDER PREVIOUS NOA's

A. DRAWINGS

1. Manufacturer's die drawings and sections.
   (Submitted under NOA No. 15-0812.04)
2. Drawing No. **MD-DH5560-01** titled "Double Hung Window Installation - LM", sheets 1 through 14 of 14, dated 05/15/15, with revision **C** dated 03/11/20, prepared by manufacturer, signed and sealed by Anthony Lynn Miller, P.E.
   (Submitted under NOA No. 20-0401.06)

B. TESTS

1. Test reports on: 1) Air Infiltration Test, per FBC, TAS 202-94
   2) Uniform Static Air Pressure Test, Loading per FBC, TAS 202-94
   3) Water Resistance Test, per FBC, TAS 202-94
   4) Large Missile Impact Test per FBC, TAS 201-94
   5) Cyclic Wind Pressure Loading per FBC, TAS 203-94
   6) Forced Entry Test, per ASTM F588 and TAS 202-94
   along with marked-up drawings and installation diagram of all PGT Industries, Inc. representative units listed below and tested to qualify **Dowsil 791** and **Dowsil 983** silicones, prepared by Fenestration Testing Laboratory, Inc., Test Reports No.:
   FTL-7897, PGT PW5520 PVC Fixed Window (unit 6 in proposal), dated 09/03/14
   FTL-20-2107.1, PGT SGD780 Aluminum Sliding Glass Door (unit 7 in proposal)
   FTL-20-2107.2, PGT CA740 Alum. Outswing Casement Window (unit 8 in proposal)
   FTL-20-2107.3, PGT PW7620A Aluminum Fixed Window (unit 9 in proposal) and
   FTL-20-2107.4, PGT PW7620A Aluminum Fixed Window (unit 10 in proposal)
   dated 07/13/20, all signed and sealed by Idalmis Ortega, P.E.
   (Submitted under NOA No. 20-0401.06)
2. Test reports on: 1) Uniform Static Air Pressure Test, Loading per FBC, TAS 202-94
   2) Large Missile Impact Test per FBC, TAS 201-94
   3) Cyclic Wind Pressure Loading per FBC, TAS 203-94
   along with marked-up drawings and installation diagram of a PVC sliding glass door, a PVC fixed window and an aluminum sliding glass door, using: Kodispace 4SG TPS spacer system, Duraseal® spacer system, Super Spacer® NXT™ spacer system and XL Edge™ spacer system at insulated glass, prepared by Fenestration Testing Laboratory, Inc., Test Reports No. **FTL-8717, FTL-8968** and **FTL-8970**, dated 11/16/15, 06/07/16 and 06/02/16 respectively, all signed and sealed by Idalmis Ortega, P.E.
   (Submitted under NOA No. 16-0714.09)

Manuel Perez

Manuel Perez, P.E.
Product Control Examiner
NOA No. 23-0816.18
Expiration Date: September 17, 2025
Approval Date: September 14, 2023

NOTICE OF ACCEPTANCE: EVIDENCE SUBMITTED

1. EVIDENCE SUBMITTED UNDER PREVIOUS NOA's (CONTINUED)

B. TESTS (CONTINUED)

3. Test reports on: 1) Air Infiltration Test, per FBC, TAS 202-94
2) Uniform Static Air Pressure Test, Loading per FBC TAS 202-94
3) Water Resistance Test, per FBC, TAS 202-94
4) Forced Entry Test, per FBC 2411.3.2.1, and TAS 202-94
5) Large Missile Impact Test per FBC, TAS 201-94
6) Cyclic Wind Pressure Loading per FBC, TAS 203-94

along with marked-up drawings and installation diagram of series 5460 and series 5560 PVC double hung windows, prepared by Fenestration Testing Laboratory, Inc., Test Report No. **FTL-8006**, dated 04/27/15, signed and sealed by Idalmis Ortega, P.E.
(Submitted under NOA No. 15-0812.04)

4. Test reports on: 1) Uniform Static Air Pressure Test, Loading per FBC TAS 202-94
2) Large Missile Impact Test per FBC, TAS 201-94
3) Cyclic Wind Pressure Loading per FBC, TAS 203-94

along with marked-up drawings and installation diagram of a series 5560 PVC double hung window, prepared by Fenestration Testing Laboratory, Inc., Test Report No. **FTL-8007**, dated 04/28/15, signed and sealed by Idalmis Ortega, P.E.
(Submitted under NOA No. 15-0812.04)

C. CALCULATIONS

1. Anchor verification calculations and structural analysis, complying with **FBC 6th Edition *(*2017)** and **FBC 7th Edition *(*2020)**, dated 03/13/20, prepared by manufacturer, signed and sealed by Anthony Lynn Miller, P.E.
(Submitted under NOA No. 20-0401.06)

2. Glazing complies with **ASTM E1300-09**

D. QUALITY ASSURANCE

1. Miami-Dade Department of Regulatory and Economic Resources (RER).

Manuel Perez

Manuel Perez, P.E.
Product Control Examiner
NOA No. 23-0816.18
Expiration Date: September 17, 2025
Approval Date: September 14, 2023

NOTICE OF ACCEPTANCE: EVIDENCE SUBMITTED

1. **EVIDENCE SUBMITTED UNDER PREVIOUS NOA's (CONTINUED)**

E. **MATERIAL CERTIFICATIONS**

1. Notice of Acceptance No. **19-0305.02** issued to **Kuraray America, Inc.** for their "**Trosifol® Ultraclear, Clear and Color PVB Glass Interlayers**" dated 05/09/19, expiring on 07/08/24.
2. Notice of Acceptance No. **17-0808.02** issued to **Kuraray America, Inc.** for their **"SentryGlas® (Clear and White) Glass Interlayers**" dated 12/28/17, expiring on 07/04/23.
3. Notice of Acceptance No. **18-0122.02,** issued to **ENERGI Fenestration Solutions USA, Inc.**, for their **White Rigid PVC Exterior Extrusions for Windows and Doors**, approved on 03/08/18, expiring on 02/28/23.
4. Notice of Acceptance No. **20-0203.03** issued to ENERGI Fenestration Solutions USA, Inc. for their "**Bronze and Lighter Shades of Cap Coated Rigid PVC Exterior Extrusions for Windows and Doors**" dated 02/27/20, expiring on 04/16/25.
5. Notice of Acceptance No. **20-0203.04** issued to ENERGI Fenestration Solutions USA, Inc. for their "**Performance Core Rigid PVC Exterior Extrusions for Windows and Doors**" dated 02/27/20, expiring on 04/16/25.

F. **STATEMENTS**

1. Statement letter of conformance, complying with **FBC 6th Edition (2017)** and **FBC 7th Edition (2020),** dated March 11, 2020, issued by manufacturer, signed and sealed by Anthony Lynn Miller, P.E.
   (Submitted under NOA No. 20-0401.06
2. Statement letter of no financial interest, dated March 11, 2020, issued by manufacturer, signed and sealed by Anthony Lynn Miller, P.E.
   (Submitted under NOA No. 20-0401.06
3. Proposal No. **19-1155 TP** issued by the Product Control Section, dated January 10, 2020, signed by Ishaq Chanda, P.E.
   (Submitted under NOA No. 20-0401.06
4. Proposal No. **16-0125** issued by the Product Control Section, dated March 09, 2016, signed by Ishaq Chanda, P.E.
   (Submitted under NOA No. 16-0714.09)
5. Proposal issued by Product Control, dated 6/26/14 and revised on 8/19/14, signed by Jaime Gascon, P.E., Supervisor, Product Control Section.
   (Submitted under NOA No. 15-0812.04)

G. **OTHERS**

1. Notice of Acceptance No. **17-0630.10**, issued to PGT Industries, Inc. for their Series "DH-5560" PVC Double Hung Window - L.M.I. approved on 11/02/17 and expiring on 09/17/20.

Manuel Perez

Manuel Perez, P.E.
Product Control Examiner
NOA No. 23-0816.18
Expiration Date: September 17, 2025
Approval Date: September 14, 2023

NOTICE OF ACCEPTANCE: EVIDENCE SUBMITTED

2. NEW EVIDENCE SUBMITTED

A. DRAWINGS

1. Drawing No. **MD-DH5560-01** titled "Double Hung Install (LM)", sheets 1 through 14 of 14, dated 05/15/15, with revision **D** dated 08/10/23, prepared by manufacturer, signed and sealed by Anthony Lynn Miller, P.E.

B. TESTS

1. None.

C. CALCULATIONS

1. None.

D. QUALITY ASSURANCE

1. Miami-Dade Department of Regulatory and Economic Resources (RER).

E. MATERIAL CERTIFICATIONS

1. Notice of Acceptance No. **20-0915.22** issued to **Kuraray America, Inc.** for their "**Trosifol® Ultraclear, Clear and Color PVB Glass Interlayers**" dated 11/19/20, expiring on 07/08/24.
2. Notice of Acceptance No. **22-1116.01** issued to **Kuraray America, Inc.** for their **"SentryGlas® (Clear and White) Glass Interlayers**" dated 12/15/22, expiring on 07/04/28.
3. Notice of Acceptance No. **21-1109.04,** issued to **Vision Extrusions Group Limited**, for their **White Rigid PVC Exterior Extrusions for Windows and Doors**, approved on 03/31/22, expiring on 09/30/24.
4. Notice of Acceptance No. **22-0104.04,** issued to **Vision Extrusions Group Limited**, for their **Bronze and Lighter Shades of Cap Coated Rigid PVC Exterior Extrusions for Windows and Doors**, approved on 04/14/22, expiring on 12/29/26.
5. Notice of Acceptance No. **22-0621.01,** issued to **Vision Extrusions Group Limited**, for their **Black and Lighter Shades of Cap Coated Rigid PVC Exterior Extrusions for Windows and Doors**, approved on 07/28/22, expiring on 07/28/27.

F. STATEMENTS

1. Statement letter of conformance, complying with **FBC 7th Edition (2020)** and the **FBC 8th Edition (2023)**, dated August 11, 2023, issued by manufacturer, signed and sealed by Anthony Lynn Miller, P.E.
2. Statement letter of no financial interest, dated August 11, 2023, issued by manufacturer, signed and sealed by Anthony Lynn Miller, P.E.

G. OTHERS

1. Notice of Acceptance No. **20-0401.06**, issued to PGT Industries, Inc. for their Series "DH-5560" PVC Double Hung Window – L.M.I." approved on 07/30/20 and expiring on 09/17/25.

Manuel Perez

Manuel Perez, P.E.
Product Control Examiner
NOA No. 23-0816.18
Expiration Date: September 17, 2025
Approval Date: September 14, 2023

SERIES DH5560 IMPACT RESISTANT DOUBLE HUNG WINDOW

1) THIS PRODUCT HAS BEEN DESIGNED & TESTED TO COMPLY WITH THE REQUIREMENTS OF THE FLORIDA BUILDING CODE, INCLUDING THE HIGH VELOCITY HURRICANE ZONE (HVHZ).

2) SHUTTERS ARE NOT REQUIRED WHEN USED IN WIND-BORNE DEBRIS REGIONS. FOR INSULATED GLASS INSTALLATIONS ABOVE 30' IN THE HVHZ, THE OUTBOARD LITE (CAP) MUST BE TEMPERED.

3) FOR MASONRY APPLICATIONS IN MIAMI-DADE COUNTY, USE ONLY MIAMI-DADE COUNTY APPROVED MASONRY ANCHORS. MATERIALS USED FOR ANCHOR EVALUATIONS WERE SOUTHERN PINE, ASTM C90 CONCRETE MASONRY UNITS AND CONCRETE WITH MIN. KSI PER ANCHOR TYPE.

4) ALL WOOD BUCKS LESS THAN 1-1/2" THICK ARE TO BE CONSIDERED 1X INSTALLATIONS. 1X WOOD BUCKS ARE OPTIONAL IF UNIT IS INSTALLED DIRECTLY TO SUBSTRATE. WOOD BUCKS DEPICTED AS 2X ARE 1-1/2" THICK OR GREATER. 1X AND 2X BUCKS (WHEN USED) SHALL BE DESIGNED AND SECURED TO PROPERLY TRANSFER LOADS TO THE STRUCTURE. WOOD BUCK DESIGN AND INSTALLATION IS THE RESPONSIBILITY OF THE ENGINEER, (EOR) OR ARCHITECT OF RECORD, (AOR).

5) ANCHOR EMBEDMENT TO BASE MATERIAL SHALL BE BEYOND WALL DRESSING OR STUCCO. USE ANCHORS OF SUFFICIENT LENGTH TO ACHIEVE REQUIRED MIN. EMBEDMENT. INST. ANCHORS SHOULD BE SEALED. OVERALL SEALING/FLASHING STRATEGY FOR WATER RESISTANCE OF INSTALLATION SHALL BE DONE BY OTHERS AND IS BEYOND THE SCOPE OF THESE INSTRUCTIONS.

6) 1/4" MAX. SHIMS ARE REQUIRED AT EACH ANCHOR LOCATION WHERE THE PRODUCT IS NOT FLUSH TO THE SUBSTRATE. USE SHIMS CAPABLE OF TRANSFERRING APPLIED LOADS.

7) DESIGN PRESSURES:
A. NEGATIVE DESIGN LOADS BASED ON STRUCTURAL & CYCLE TESTING AND GLASS PER ASTM E1300.
B. POSITIVE DESIGN LOADS BASED ON WATER TEST PRESSURE, STRUCTURAL & CYCLE TESTING AND GLASS PER ASTM E1300.
C. DESIGN LOADS ARE BASED ON ALLOWABLE STRESS DESIGN, ASD.

8) THE ANCHORAGE METHODS SHOWN HAVE BEEN DESIGNED TO RESIST THE WINDLOADS CORRESPONDING TO THE REQUIRED DESIGN PRESSURE. THE 33-1/3% STRESS INCREASE HAS NO BEEN USED IN THE DESIGN OF THIS PRODUCT. THE 1.6 LOAD DURATION FACTOR WAS USED FOR THE EVALUATION OF ANCHORS INTO WOOD. ANCHORS THAT COME INTO CONTACT WIT OTHER DISSIMILAR MATERIALS SHALL MEET THE REQUIREMENTS OF THE FLORIDA BUILDING CODE FOR CORROSION RESISTANCE.

9) METAL SUBSTRATE TO MEET MIN. STRENGTH AND THICKNESS REQUIREMENTS PER CURRENT FLORIDA BUILDING CODE AND TO BE REVIEWED BY THE AUTHORITY HAVING JURISDICTION.

10) REFERENCES: TEST REPORTS FTL-8006 & 8007; ELCO/DEWALT ULTRACON+; ELCO/DEWALT CRETEFLEX NOA; ELCO/DEWALT AGGRE-GATOR NOA; ENERGI WINDOW AND DOOR PROFILES, LTD WHITE & BRONZE/LIGHTER SHADES OF CAP COATED PVC EXTRUSION NOA'S; NATIONAL DESIGN SPECIFICATION FOR WOOD CONSTRUCTION, ANSI/AF&PA NDS & ALUMINUM DESIGN MANUAL.

11) APPLICABLE EGRESS REQUIREMENTS TO BE REVIEWED BY BUILDING OFFICIAL.

12) FRAME FLANGES OR INTEGRAL FINS MAY BE TRIMMED IN-FIELD TO CREATE AN EQUAL LEG FRAME.

USER INSTRUCTIONS:

1) DETERMINE THE SITE SPECIFIC, WINDOW OPENING'S DESIGN PRESSURE REQUIREMENT FROM ASCE 7.
2) DETERMINE THE MOST SUITABLE ANCHOR GROUP FROM TABLES 2 OR 3 ACCORDING TO THE INSTALLATION CONDITIONS.
3) KNOWING YOUR GLAZING OPTION (TABLE 1), WINDOW CONFIGURATION AND SIZE, DETERMINE YOUR WINDOW'S DESIGN PRESSURE FROM TABLES 4-7. IT MUST EQUAL OR EXCEED THE DESIGN PRESSURE REQUIREMENT FOR THE WINDOW OPENING OBTAINED IN STEP 1.
4) DETERMINE THE ANCHOR QUANTITY FROM TABLES 8-11. VERIFY THE ANCHOR/SUBSTRATE WILL MEET REQUIREMENTS FOR YOUR OPENING'S CONDITION FROM TABLES 2 OR 3, AND THAT ALL MIN. REQUIREMENTS FROM THIS SHEET-SET ARE MET.
5) INSTALL AS PER SHEET 3 FOR THRU-FRAME INSTALLATION OR SHEET 4 FOR INTEGRAL FIN INSTALLATION.

NOTE:DESIGN PRESSURE RATING DETERMINATION IS THE SAME PROCESS FOR ALL FRAME TYPES (J-CHANNEL, FLANGE, INTEGRAL FIN OR EQUAL LEG/BOX).

CODES / STANDARDS USED:

- 2023 FLORIDA BUILDING CODE (FBC), 8TH EDITION
- 2020 FLORIDA BUILDING CODE (FBC), 7TH EDITION
- ASTM E1300-09
- ANSI/AF&PA NDS-2018 FOR WOOD CONSTRUCTION
- ALUMINUM DESIGN MANUAL, ADM-2020
- AISI S100-16
- AISC 360-16

GENERAL NOTES & ELEVATIONS........................1
FRAME, GLASS & ANCHOR OPTIONS.................2
INSTALLATION, FLANGE & EQUAL LEG/BOX.....3
INSTALLATION, INTEGRAL FIN & J-CHANNEL....4
GLAZING DETAILS... 5
SPACERS & DESIGN PRESSURES.......................6
DESIGN PRESSURE TABLES...............................7
ANCHOR QUANTITIES... 8-11
EXTRUSION PROFILES... 12
ASSEMBLY & PARTS LIST.................................. 13-14

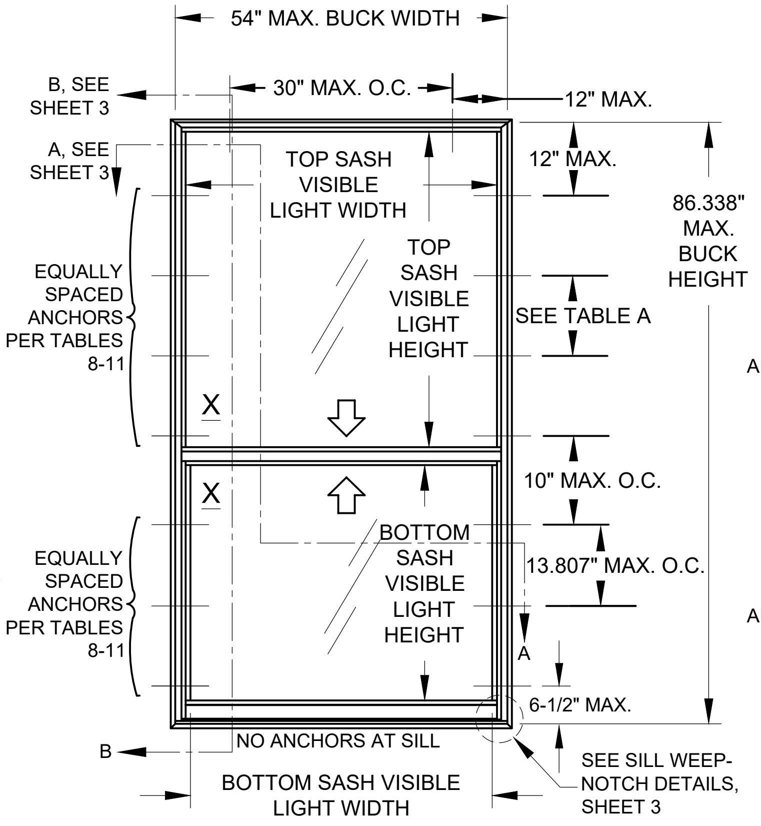
54" MAX. BUCK WIDTH
30" MAX. O.C.
12" MAX.
B, SEE SHEET 3
A, SEE SHEET 3
TOP SASH VISIBLE LIGHT WIDTH
TOP SASH VISIBLE LIGHT HEIGHT
12" MAX.
86.338" MAX. BUCK HEIGHT
SEE TABLE A
EQUALLY SPACED ANCHORS PER TABLES 8-11
X
10" MAX. O.C.
BOTTOM SASH VISIBLE LIGHT HEIGHT
13.807" MAX. O.C.
A
6-1/2" MAX.
B
NO ANCHORS AT SILL
SEE SILL WEEP-NOTCH DETAILS, SHEET 3
BOTTOM SASH VISIBLE LIGHT WIDTH

ELEVATION FOR TYP. FLANGE FRAME
SHOWN WITH ORIEL/PROVIEW CONFIGURATION

DESIGN PRESSURE RATING	IMPACT RATING
VARIES PER REINFORCEMENT LEVEL, SEE SHEETS 6-7	LARGE & SMALL MISSILE IMPACT RESISTANT

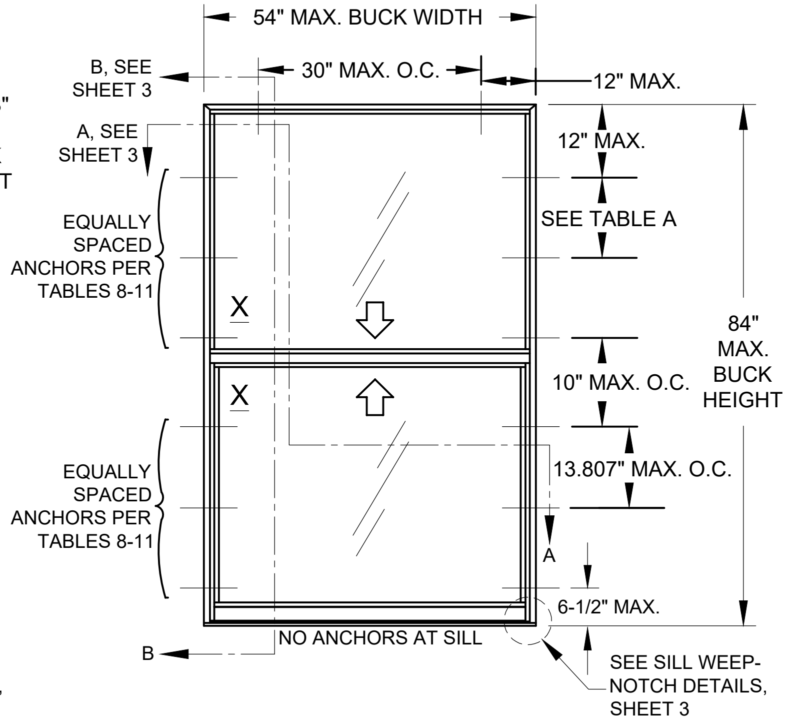
54" MAX. BUCK WIDTH
30" MAX. O.C.
12" MAX.
B, SEE SHEET 3
A, SEE SHEET 3
12" MAX.
SEE TABLE A
EQUALLY SPACED ANCHORS PER TABLES 8-11
X
84" MAX. BUCK HEIGHT
10" MAX. O.C.
13.807" MAX. O.C.
A
6-1/2" MAX.
B
NO ANCHORS AT SILL
SEE SILL WEEP-NOTCH DETAILS, SHEET 3

ELEVATION FOR TYP. EQUAL LEG FRAME
SHOWN WITH EQUAL-LITE CONFIGURATION

TABLE A: MAXIMUM O.C. SPACING

Glass Types	Above Meeting Rail
5 - 8	15.112"
9 - 16	12"

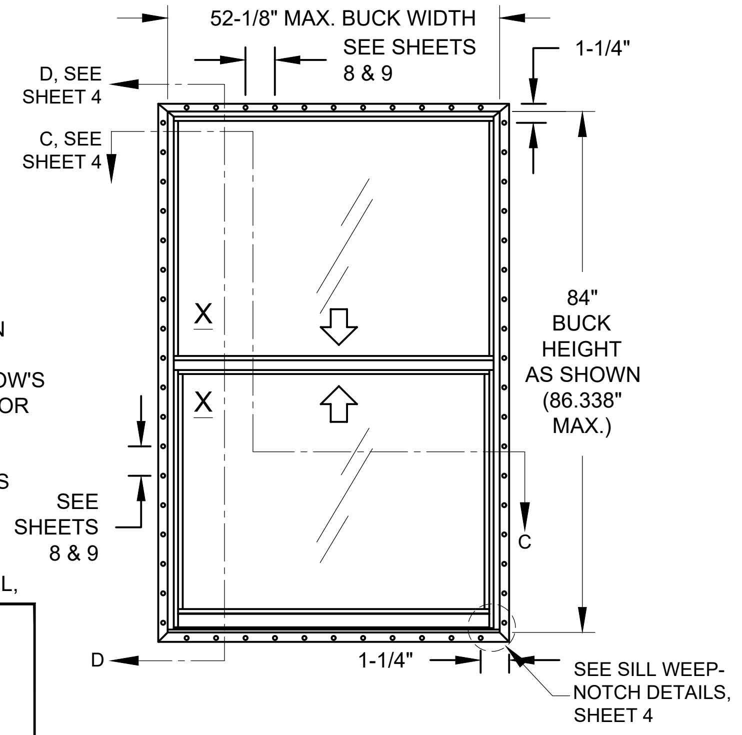
52-1/8" MAX. BUCK WIDTH
SEE SHEETS 8 & 9
1-1/4"
D, SEE SHEET 4
C, SEE SHEET 4
X
84" BUCK HEIGHT AS SHOWN (86.338" MAX.)
C
SEE SHEETS 8 & 9
D
1-1/4"
SEE SILL WEEP-NOTCH DETAILS, SHEET 4

ELEVATION FOR TYP. FIN OR J-CHANNEL FRAME
SHOWN WITH EQUAL-LITE CONFIGURATION
ANCHORED THROUGH THE NAIL-FIN
(SIMILAR ANCHOR DIMENSIONS FOR OTHER CONFIGURATIONS)

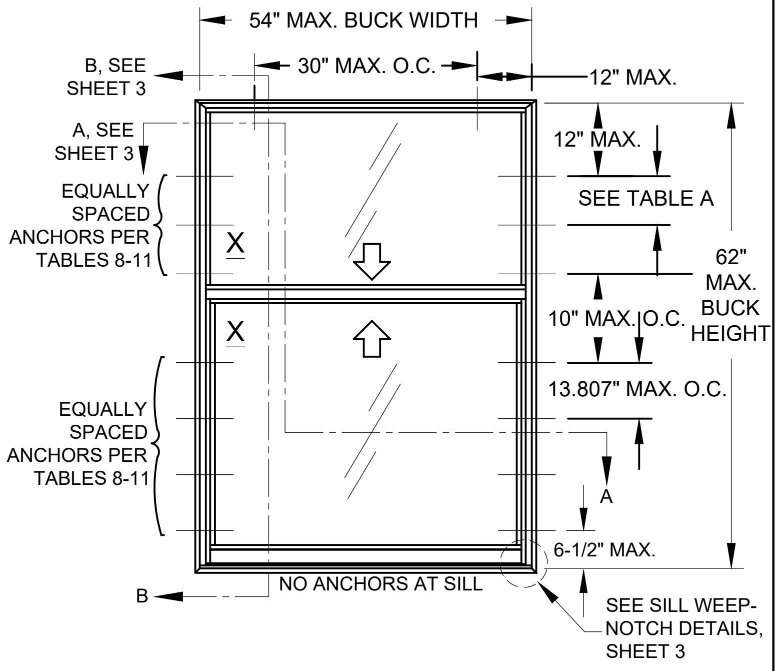
54" MAX. BUCK WIDTH
30" MAX. O.C.
12" MAX.
B, SEE SHEET 3
A, SEE SHEET 3
12" MAX.
SEE TABLE A
EQUALLY SPACED ANCHORS PER TABLES 8-11
X
62" MAX. BUCK HEIGHT
10" MAX. O.C.
13.807" MAX. O.C.
A
6-1/2" MAX.
B
NO ANCHORS AT SILL
SEE SILL WEEP-NOTCH DETAILS, SHEET 3

ELEVATION FOR TYP. FLANGE FRAME
SHOWN WITH STANDARD COTTAGE CONFIGURATION
FOR CUSTOM COTTAGE CONFIGURATION UP TO 75" HEIGHT SEE TABLES 6-11

PRODUCT REVISED
As complying with the Florida Building Code
NOA-No. 23-0816.18
Expiration Date: 09/17/2025
By: Manuel Perez
Miami-Dade Product Control

Revision:
D) UPDATED TO FBC 2023.

PREPARED BY A. LYNN MILLER
1070 TECHNOLOGY DRIVE
N. VENICE, FL 34275
(941) 480-1600

REGISTRATION #29296

PGT
Custom Windows and Doors
1070 TECHNOLOGY DRIVE
N. VENICE, FL 34275
(941) 480-1600

Title: DOUBLE HUNG INSTALL (LM)
Desc.: GENERAL NOTES & ELEVATION.
Series: DH-5560
Date: 05/15/15
Drawn By: A. MORLESIN
Sheet: 1 OF 14
DWG No.: MD-DH5560-01
Rev.: D

No. 58705
A Lynn Miller
8/10/23
A. LYNN MILLER, P.E.
P.E.# 58705

TABLE 1: ALLOWABLE GLASS TYPES

Glass Type	Description (Listed from Exterior to Interior)	Design Pressure	
		Table #	Sheet #
5	7/8" Laminated I.G.: 1/8" A Exterior Cap + 7/16" Air Space + 5/16" Laminated; (2) Lites of 1/8" A Glass with .090" PVB Interlayer	4, 5	6
6	7/8" Laminated I.G.: 1/8" T Exterior Cap + 7/16" Air Space + 5/16" Laminated; (2) Lites of 1/8" A Glass with .090" PVB Interlayer	4, 5	6
7	7/8" Laminated I.G.: 3/16" A Exterior Cap + 3/8" Air Space + 5/16" Laminated; (2) Lites of 1/8" A Glass with .090" PVB Interlayer	4, 5	6
8	7/8" Laminated I.G.: 3/16" T Exterior Cap + 3/8" Air Space + 5/16" Laminated; (2) Lites of 1/8" A Glass with .090" PVB Interlayer	4, 5	6
9	7/8" Laminated I.G.: 1/8" A Exterior Cap + 7/16" Air Space + 5/16" Laminated; (2) Lites of 1/8" H Glass with .090" SG Interlayer	6	7
10	7/8" Laminated I.G.: 1/8" T Exterior Cap + 7/16" Air Space + 5/16" Laminated; (2) Lites of 1/8" H Glass with .090" SG Interlayer	6	7
11	7/8" Laminated I.G.: 3/16" A Exterior Cap + 3/8" Air Space + 5/16" Laminated; (2) Lites of 1/8" H Glass with .090" SG Interlayer	6	7
12	7/8" Laminated I.G.: 3/16" T Exterior Cap + 3/8" Air Space + 5/16" Laminated; (2) Lites of 1/8" H Glass with .090" SG Interlayer	6	7
13	7/8" Laminated I.G.: 1/8" A Exterior Cap + 5/16" Air Space + 7/16" Laminated; (2) Lites of 3/16" A Glass with .090" SG Interlayer	7	7
14	7/8" Laminated I.G.: 1/8" T Exterior Cap + 5/16" Air Space + 7/16" Laminated; (2) Lites of 3/16" A Glass with .090" SG Interlayer	7	7
15	7/8" Laminated I.G.: 3/16" A Exterior Cap + 1/4" Air Space + 7/16" Laminated; (2) Lites of 3/16" A Glass with .090" SG Interlayer	7	7
16	7/8" Laminated I.G.: 3/16" T Exterior Cap + 1/4" Air Space + 7/16" Laminated; (2) Lites of 3/16" A Glass with .090" SG Interlayer	7	7

! GLASS TYPES 5, 7, 9, 11, 13 & 15 MAY NOT BE USED IN THE HVHZ ABOVE 30'.

"A" = ANNEALED
"H" = HEAT STRENGTHENED
"T" = TEMPERED
"PVB" = .090" TROSIFOL® PVB BY KURARAY AMERICA, INC.

"SG" = .090" SENTRYGLAS® INTERLAYER BY KURARAY AMERICA, INC.

Material	Min. F_y	Min. F_u
Steel Screw	92 ksi	120 ksi
18-8 Screw	60 ksi	95 ksi
410 Screw	90 ksi	110 ksi
Elco/DeWalt Aggre-Gator®	57 ksi	96 ksi
Elco UltraCon®	155 ksi	177 ksi
3/16" DeWalt UltraCon+®	117 ksi	164 ksi
1/4" DeWalt UltraCon+®	148 ksi	164 ksi
410 SS Elco/Dewalt CreteFlex®	127.4 ksi	189.7 ksi
6063-T5 Aluminum	16 ksi	22 ksi
A36 Steel	36 ksi	58 ksi
Gr. 33 Steel Stud	33 ksi	45 ksi

PRODUCT REVISED
As complying with the Florida Building Code
NOA-No. 23-0816.18
Expiration Date: 09/17/2025
By: Manuel Perez
Miami-Dade Product Control

Revision:
D) REMOVED ULTRACON FROM ANCHOR TABLES.

TABLE 2: ALLOWABLE ANCHORS THROUGH THE FRAME

Group	Anchor	Substrate	Min. Edge Distance	Min. Embedment*
A	#10 SMS (steel, 18-8 S.S. or 410 S.S.)	P.T. Southern Pine (SG=0.55)	7/16"	1-3/8"
		Steel, A36*	3/8"	0.050"
		Steel Stud, A653 Gr. 33*	3/8"	0.0451" (18 Ga.)
		Aluminum, 6063-T5*	3/8"	0.050"
	3/16" steel Ultracon+	P.T. Southern Pine (SG=0.55)	7/16"	1-3/8"
		Concrete (min. 3 ksi)	1"	1-3/8"
	3/16" steel Ultracon+	Ungrouted CMU, (ASTM C-90)	1"	1-1/4"
B	#12 SMS (steel, 18-8 S.S. or 410 S.S.)	P.T. Southern Pine (SG=0.55)	9/16"	1-3/8"
		Steel, A36*	3/8"	0.050"
		Steel Stud, A653 Gr. 33*	3/8"	0.0451" (18 Ga.)
		Aluminum, 6063-T5*	3/8"	0.063"
	1/4" steel Ultracon+	P.T. Southern Pine (SG=0.55)	1"	1-3/8"
	1/4" steel Creteflex	P.T. Southern Pine (SG=0.55)	1"	1-3/8"
	1/4" steel Aggre-Gator	P.T. Southern Pine (SG=0.55)	1"	1-3/8"
C	1/4" steel Ultracon+	Concrete (min. 3 ksi)	1-3/16"	1-3/4"
		Ungrouted CMU, (ASTM C-90)	1"	1-1/4"
	1/4" steel Creteflex	Concrete (min. 3.35 ksi)	1"	1-3/4"
D	1/4" steel Ultracon+	Concrete (min. 3 ksi)	2-1/2"	1-3/4"
	1/4" steel Ultracon+	Ungrouted CMU, (ASTM C-90)	2-1/2"	1-1/4"
	1/4" steel Creteflex	Concrete (min. 3.35 ksi)	2-1/2"	1-3/4"
		Ungrouted CMU, (ASTM C-90)	2-1/2"	1-1/4"
	1/4" steel Aggre-Gator	Concrete (min. 3.275 ksi)	1-1/2"	1-3/8"
		Grouted CMU, (ASTM C-90)	2"	2"

TABLE 3: ALLOWABLE ANCHORS THROUGH THE INTEGRAL FIN

Group	Anchor	Substrate	Min. Edge Distance	Min. Embedment*
E	2-1/2" x .131" Common Nail	P.T. Southern Pine (SG=.55)	3/8"	2-7/16"
F	2-1/2" Ring-shank Roofing Nail	P.T. Southern Pine (SG=.55)	3/8"	2-7/16"
	#10 Trusshead SMS (steel, 18-8 S.S. or 410 S.S.)	P.T. Southern Pine (SG=.55)	1/2"	1-3/8"
		Aluminum, 6063-T5*	3/8"	0.050"
		Steel Stud, Gr. 33*	3/8"	0.0451" (18 Ga.)
		Steel, A36*	3/8"	0.050"
	#12 SMS (steel, 18-8 S.S. or 410 S.S.)	P.T. Southern Pine (SG=.55)	9/16"	1-3/8"
		Aluminum, 6063-T5*	3/8"	0.063"
		Steel Stud, Gr. 33*	3/8"	0.050"
		Steel, A36*	3/8"	0.050"

ANCHOR NOTES:
1) * MIN. OF 3 THREADS BEYOND THE METAL SUBSTRATE. FOR STEEL STUDS, MIN. Fu=45 KSI & Fy=33 KSI.
2) "UNGROUTED CMU" VALUES MAY BE USED FOR GROUTED CMU APPLICATIONS.
3) ALL ANCHOR HEAD TYPES ACCEPTABLE.

FIGURE A: FRAME CONFIGURATIONS

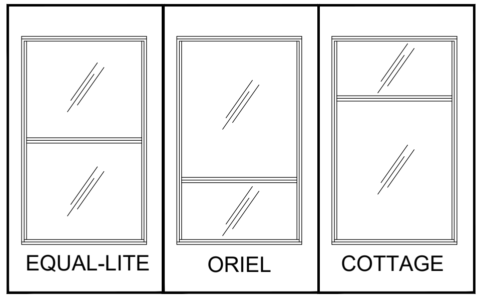

FIGURE B: FRAME TYPES

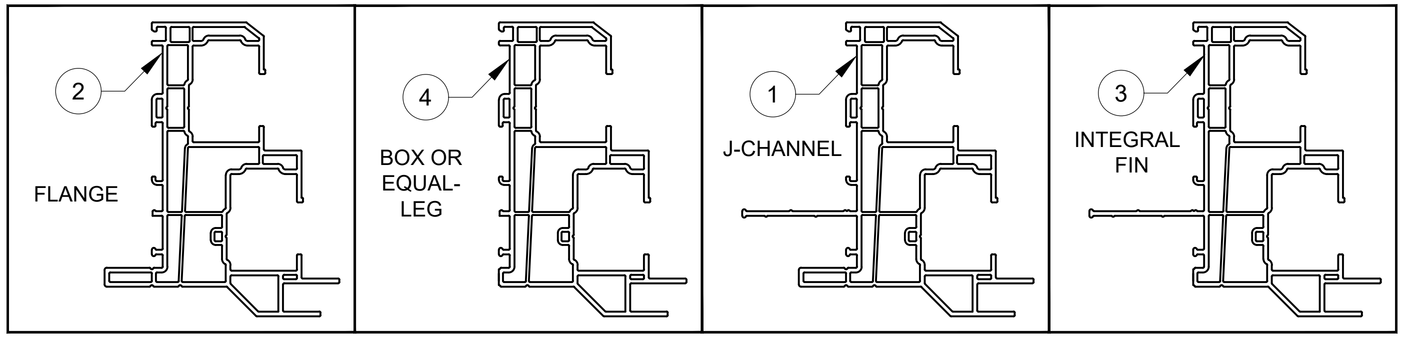

Frame Types (see Fig B)	Glass Options (see Table 1)	Frame Configs. (see Fig A)	Installation Options that may be used	
Flange (#2)	5 - 16	Equal-Lite, Oriel/Proview & Cottage	Through the frame of the window......	....into 2X Wood Frame/Buckstrip - sheet 3, option 1
				....into Concrete/CMU - sheet 3, option 2
				....through 1X Buckstrip into Concrete/CMU - sheet 3, option 3
				....into Metal - sheet 3, option 4
Box / Equal-Leg (#4)	5 - 16	Equal-Lite, Oriel/Proview & Cottage	Through the frame of the window......	....into 2X Wood Frame/Buckstrip - sheet 3, option 1
				....into Concrete/CMU - sheet 3, option 2
				....through 1X Buckstrip into Concrete/CMU - sheet 3, option 3
				....into Metal - sheet 3, option 4
J-Channel (#1)	5 - 8	Equal-Lite, Oriel/Proview & Cottage	Through the integral fin......	....into 2X Wood Frame/Buckstrip - sheet 4, option 5
				....into Metal - sheet 4, option 7
			Through the frame of the window......	....into 2X Wood Frame/Buckstrip - sheet 4, option 6
				....into Metal - sheet 4, option 8
Integral Fin (#3)	5 - 8	Equal-Lite, Oriel/Proview & Cottage	Through the integral fin......	....into 2X Wood Frame/Buckstrip - sheet 4, option 5
				....into Metal - sheet 4, option 7
			Through the frame of the window......	....into 2X Wood Frame/Buckstrip - sheet 4, option 6
				....into Metal - sheet 4, option 8

PREPARED BY A. LYNN MILLER
1070 TECHNOLOGY DRIVE
N. VENICE, FL 34275
(941) 480-1600

REGISTRATION #29296

PGT
Custom Windows and Doors
1070 TECHNOLOGY DRIVE
N. VENICE, FL 34275
(941) 480-1600

Title	DOUBLE HUNG INSTALL (LM)
Date	05/15/15
Desc.	FRAME, GLASS & ANCHOR OPT.
Drawn By	A. MORLESIN
Series	DH-5560
Sheet	2 OF 14
DWG No.	MD-DH5560-01
Rev.	D

No. 58705
A Lynn Miller
8/10/23

A. LYNN MILLER, P.E.
P.E.# 58705

INSTALLATION DETAILS FOR FLANGE & EQUAL-LEG/BOX FRAMES

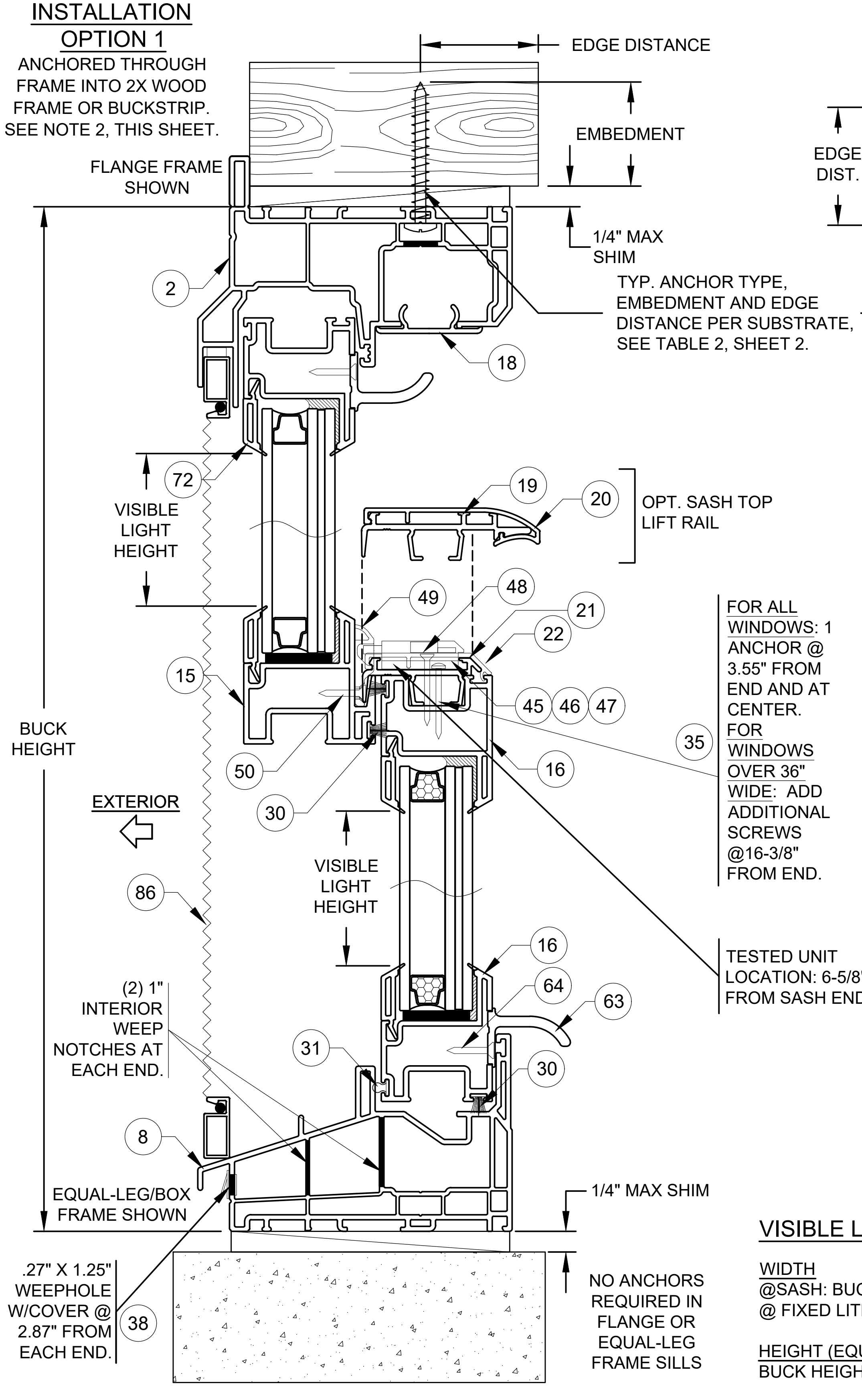
INSTALLATION OPTION 1
ANCHORED THROUGH FRAME INTO 2X WOOD FRAME OR BUCKSTRIP. SEE NOTE 2, THIS SHEET.
EDGE DISTANCE
EMBEDMENT
FLANGE FRAME SHOWN
1/4" MAX SHIM
TYP. ANCHOR TYPE, EMBEDMENT AND EDGE DISTANCE PER SUBSTRATE, SEE TABLE 2, SHEET 2.
2
18
72
VISIBLE LIGHT HEIGHT
19
20
OPT. SASH TOP LIFT RAIL
49
48
21
22
15
45
46
47
35
16
50
30
BUCK HEIGHT
EXTERIOR
VISIBLE LIGHT HEIGHT
86
16
64
63
(2) 1" INTERIOR WEEP NOTCHES AT EACH END.
31
30
8
EQUAL-LEG/BOX FRAME SHOWN
1/4" MAX SHIM
.27" X 1.25" WEEPHOLE W/COVER @ 2.87" FROM EACH END.
38
NO ANCHORS REQUIRED IN FLANGE OR EQUAL-LEG FRAME SILLS

FOR ALL WINDOWS: 1 ANCHOR @ 3.55" FROM END AND AT CENTER.
FOR WINDOWS OVER 36" WIDE: ADD ADDITIONAL SCREWS @16-3/8" FROM END.

TESTED UNIT LOCATION: 6-5/8" FROM SASH END.

VERTICAL SECTION B-B

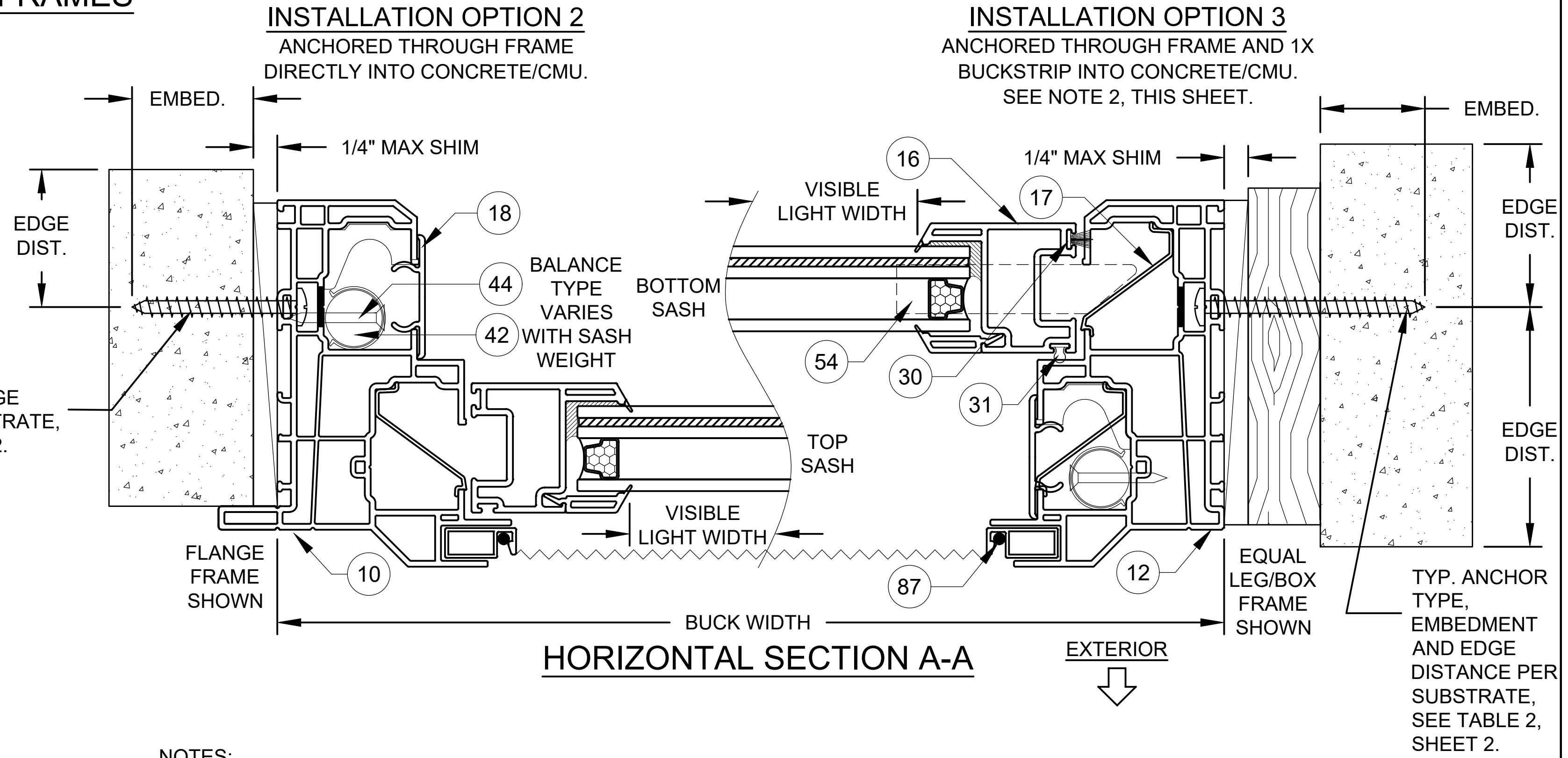
INSTALLATION OPTION 2
ANCHORED THROUGH FRAME DIRECTLY INTO CONCRETE/CMU.
EMBED.
1/4" MAX SHIM
EDGE DIST.
18
44
42
BALANCE TYPE VARIES WITH SASH WEIGHT
BOTTOM SASH
TOP SASH
VISIBLE LIGHT WIDTH
FLANGE FRAME SHOWN
10
INSTALLATION OPTION 3
ANCHORED THROUGH FRAME AND 1X BUCKSTRIP INTO CONCRETE/CMU. SEE NOTE 2, THIS SHEET.
EMBED.
16
1/4" MAX SHIM
VISIBLE LIGHT WIDTH
17
EDGE DIST.
EDGE DIST.
54
30
31
87
12
EQUAL LEG/BOX FRAME SHOWN
TYP. ANCHOR TYPE, EMBEDMENT AND EDGE DISTANCE PER SUBSTRATE, SEE TABLE 2, SHEET 2.
BUCK WIDTH
EXTERIOR

HORIZONTAL SECTION A-A

NOTES:

1) USE ONLY SUBSTRATE-APPROPRIATE ANCHORS LISTED ON TABLE 2, SHEET 2. FOLLOW EMBEDMENT AND EDGE DISTANCE LIMITS. ANY INSTALLATION OPTION SHOWN MAY BE USED ON ANY SIDE OF THE WINDOW.

2) MASONRY ANCHORS MAY BE USED INTO WOOD AS PER TABLE 2, SHEET 2. ALL WOOD BUCKS LESS THAN 1-1/2" THICK ARE TO BE CONSIDERED 1X INSTALLATIONS. 1X WOOD BUCKS ARE OPTIONAL IF UNIT IS INSTALLED DIRECTLY TO SUBSTRATE. WOOD BUCKS DEPICTED AS 2X ARE 1-1/2" THICK OR GREATER. 1X AND 2X BUCKS (WHEN USED) SHALL BE DESIGNED TO PROPERLY TRANSFER LOADS TO THE STRUCTURE. WOOD BUCK DESIGN AND INSTALLATION IS THE RESPONSIBILITY OF THE ENGINEER OR ARCHITECT OF RECORD.

3) VISIBLE LIGHT WIDTH OR HEIGHT (ALSO REFERRED TO AS DAYLIGHT OPENING) IS MEASURED FROM BEADING TO BEADING.

VISIBLE LIGHT FORMULAS

WIDTH
@SASH: BUCK WIDTH - 6-1/2"
@ FIXED LITE: BUCK WIDTH - 7-1/2"

HEIGHT (EQUAL-LITE)
BUCK HEIGHT/2 - 4-3/8"

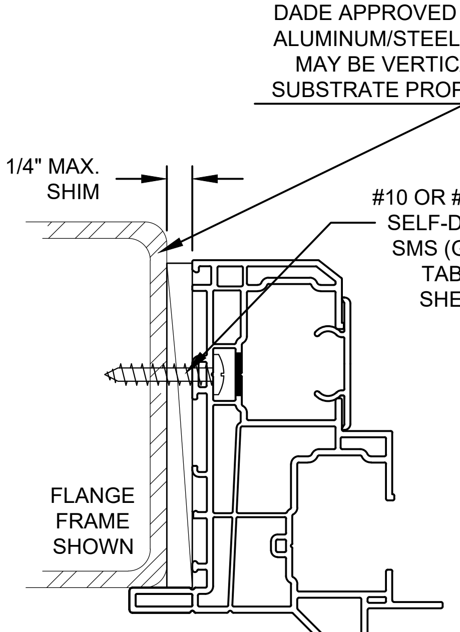
DADE APPROVED MULLION, FBC COMPLIANT ALUMINUM/STEEL FRAMING OR STEEL STUD. MAY BE VERTICAL OR HORIZONTAL. SEE SUBSTRATE PROPERTIES, TABLE 2, SHEET 2.
1/4" MAX. SHIM
#10 OR #12 STEEL SELF-DRILLING SMS (G5), SEE TABLE 2, SHEET 2.
FLANGE FRAME SHOWN

INSTALLATION OPTION 4
ANCHORED THROUGH FRAME INTO METAL

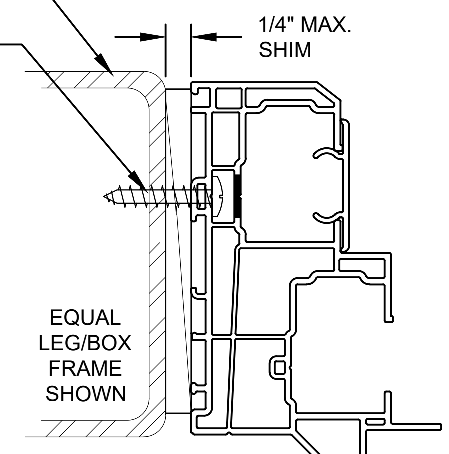
1/4" MAX. SHIM
EQUAL LEG/BOX FRAME SHOWN

EXTERIOR

INSTALLATION OPTION 4
ANCHORED THROUGH FRAME INTO METAL

PRODUCT REVISED
As complying with the Florida Building Code
NOA-No. 23-0816.18
Expiration Date: 09/17/2025
By: Manuel Perez
Miami-Dade Product Control

Revision:
D) NO CHANGES IN THIS SHEET.

PREPARED BY A. LYNN MILLER
1070 TECHNOLOGY DRIVE
N. VENICE, FL 34275
(941) 480-1600

REGISTRATION #29296

PGT
Custom Windows and Doors
1070 TECHNOLOGY DRIVE
N. VENICE, FL 34275
(941) 480-1600

Title	DOUBLE HUNG INSTALL (LM)	Date	05/15/15
Desc.	INST., FLANGE & EQUAL LEG/BOX	Drawn By	A. MORLESIN
Series	DH-5560	Sheet	3 OF 14
DWG No.	MD-DH5560-01	Rev.	D

ANTHONY LYNN MILLER
No. 58705
A. Lynn Miller
8/10/23

A. LYNN MILLER, P.E.
P.E.# 58705

INSTALLATION DETAILS FOR INTEGRAL FIN & J-CHANNEL FRAMES

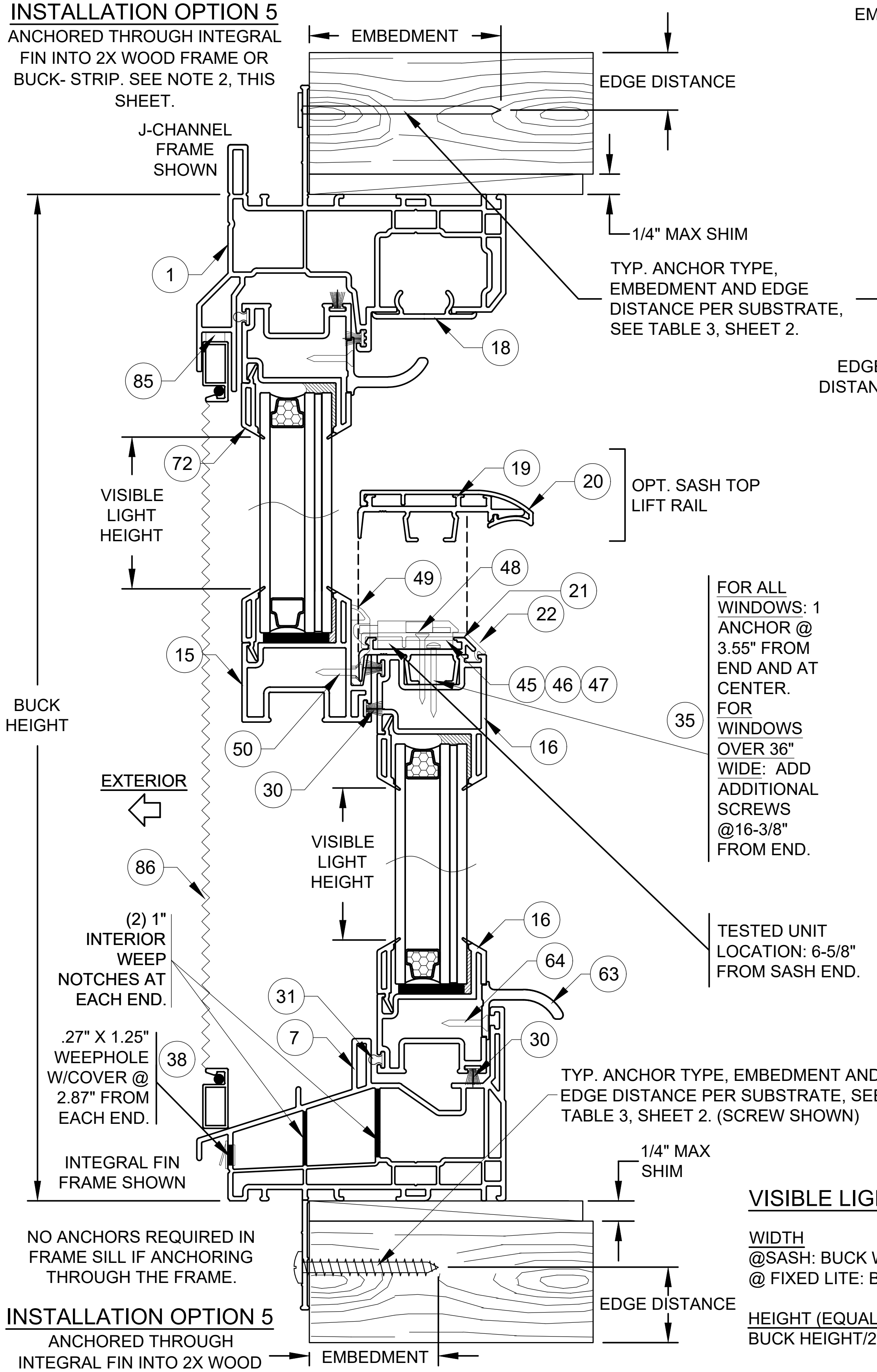
EMBEDMENT
EDGE DISTANCE
J-CHANNEL FRAME SHOWN
1/4" MAX SHIM
1
18
85
72
VISIBLE LIGHT HEIGHT
19
20
OPT. SASH TOP LIFT RAIL
49
48
21
22
15
45
46
47
35
BUCK HEIGHT
50
16
30
EXTERIOR
VISIBLE LIGHT HEIGHT
86
16
64
63
31
7
30
38
(2) 1" INTERIOR WEEP NOTCHES AT EACH END.
.27" X 1.25" WEEPHOLE W/COVER @ 2.87" FROM EACH END.
INTEGRAL FIN FRAME SHOWN
1/4" MAX SHIM
EDGE DISTANCE
EMBEDMENT

INSTALLATION OPTION 5

ANCHORED THROUGH INTEGRAL FIN INTO 2X WOOD FRAME OR BUCK- STRIP. SEE NOTE 2, THIS SHEET.

TYP. ANCHOR TYPE, EMBEDMENT AND EDGE DISTANCE PER SUBSTRATE, SEE TABLE 3, SHEET 2.

FOR ALL WINDOWS: 1 ANCHOR @ 3.55" FROM END AND AT CENTER. FOR WINDOWS OVER 36" WIDE: ADD ADDITIONAL SCREWS @16-3/8" FROM END.

TESTED UNIT LOCATION: 6-5/8" FROM SASH END.

TYP. ANCHOR TYPE, EMBEDMENT AND EDGE DISTANCE PER SUBSTRATE, SEE TABLE 3, SHEET 2. (SCREW SHOWN)

NO ANCHORS REQUIRED IN FRAME SILL IF ANCHORING THROUGH THE FRAME.

INSTALLATION OPTION 5

ANCHORED THROUGH INTEGRAL FIN INTO 2X WOOD FRAME OR BUCK- STRIP. SEE NOTE 2, THIS SHEET.

VERTICAL SECTION D-D

VISIBLE LIGHT FORMULAS

WIDTH
@SASH: BUCK WIDTH - 6-1/2"
@ FIXED LITE: BUCK WIDTH - 7-1/2"

HEIGHT (EQUAL-LITE)
BUCK HEIGHT/2 - 4-3/8"

INSTALLATION OPTION 6

ANCHORED THROUGH FRAME INTO 2X WOOD FRAME OR BUCKSTRIP. SEE NOTE 2, THIS SHEET.

INSTALLATION OPTION 5

ANCHORED THROUGH INTEGRAL FIN INTO 2X WOOD FRAME OR BUCKSTRIP. SEE NOTE 2, THIS SHEET.

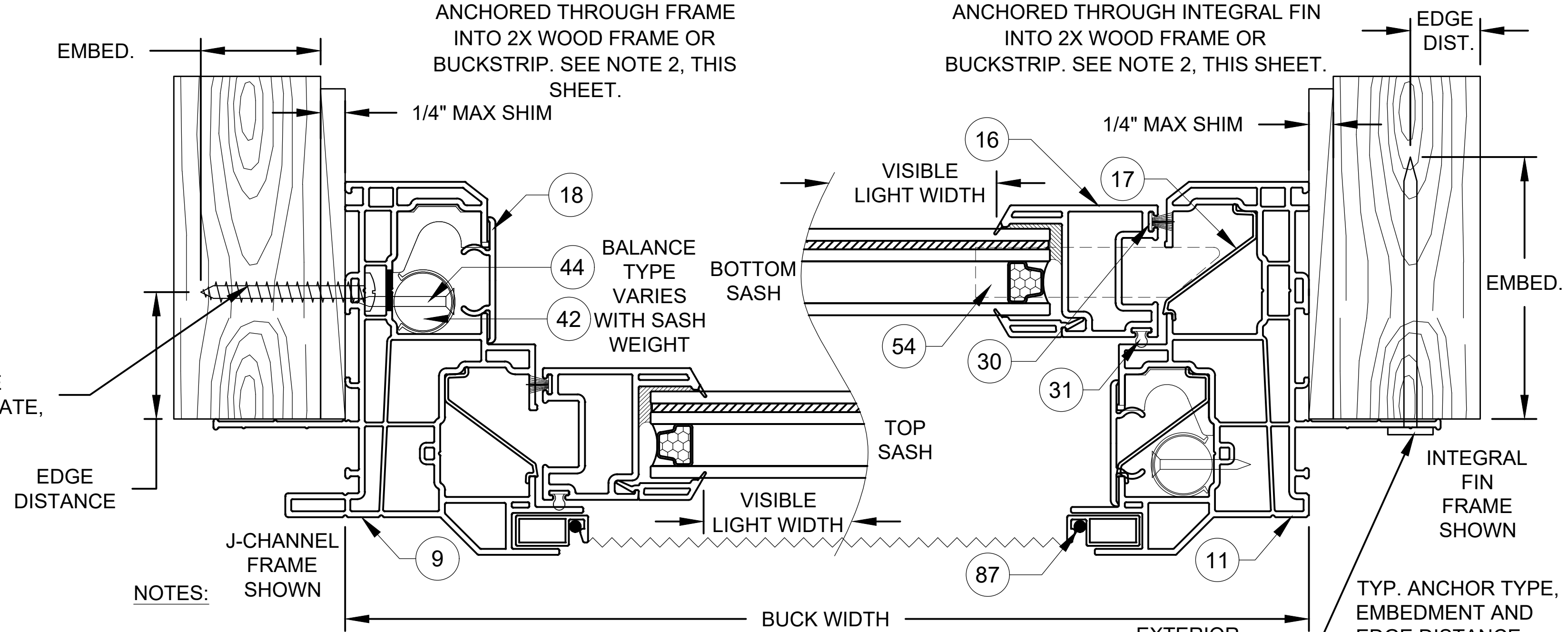
EMBED.
1/4" MAX SHIM
18
44
42
BALANCE TYPE VARIES WITH SASH WEIGHT
BOTTOM SASH
VISIBLE LIGHT WIDTH
16
1/4" MAX SHIM
17
EDGE DIST.
EMBED.
54
30
31
TOP SASH
EDGE DISTANCE
J-CHANNEL FRAME SHOWN
9
VISIBLE LIGHT WIDTH
87
11
INTEGRAL FIN FRAME SHOWN
BUCK WIDTH
EXTERIOR

TYP. ANCHOR TYPE, EMBEDMENT AND EDGE DISTANCE PER SUBSTRATE, SEE TABLE 3, SHEET 2. (NAIL SHOWN)

TYP. ANCHOR TYPE, EMBEDMENT AND EDGE DISTANCE PER SUBSTRATE, SEE TABLE 3, SHEET 2.

HORIZONTAL SECTION C-C

NOTES:

1) USE ONLY SUBSTRATE-APPROPRIATE ANCHORS LISTED ON TABLES 2 & 3 OF SHEET 2. FOLLOW EMBEDMENT AND EDGE DISTANCE LIMITS. ANY INSTALLATION OPTION SHOWN MAY BE USED ON ANY SIDE OF THE WINDOW.

2) MASONRY ANCHORS MAY BE USED INTO WOOD AS PER TABLE 2, SHEET 2. ALL WOOD BUCKS LESS THAN 1-1/2" THICK ARE TO BE CONSIDERED 1X INSTALLATIONS. 1X WOOD BUCKS ARE OPTIONAL IF UNIT IS INSTALLED DIRECTLY TO SUBSTRATE. WOOD BUCKS DEPICTED AS 2X ARE 1-1/2" THICK OR GREATER. 1X AND 2X BUCKS (WHEN USED) SHALL BE DESIGNED TO PROPERLY TRANSFER LOADS TO THE STRUCTURE. WOOD BUCK DESIGN AND INSTALLATION IS THE RESPONSIBILITY OF THE ENGINEER OR ARCHITECT OF RECORD.

3) VISIBLE LIGHT WIDTH OR HEIGHT (ALSO REFERRED TO AS DAYLIGHT OPENING) IS MEASURED FROM BEADING TO BEADING.

FBC COMPLIANT ALUMINUM/STEEL FRAMING OR STEEL STUD. MAY BE VERTICAL OR HORIZONTAL. SEE SUBSTRATE PROPERTIES, TABLES 2 & 3, SHEET 2.

ALSO FOR DADE-APPROVED MULLION

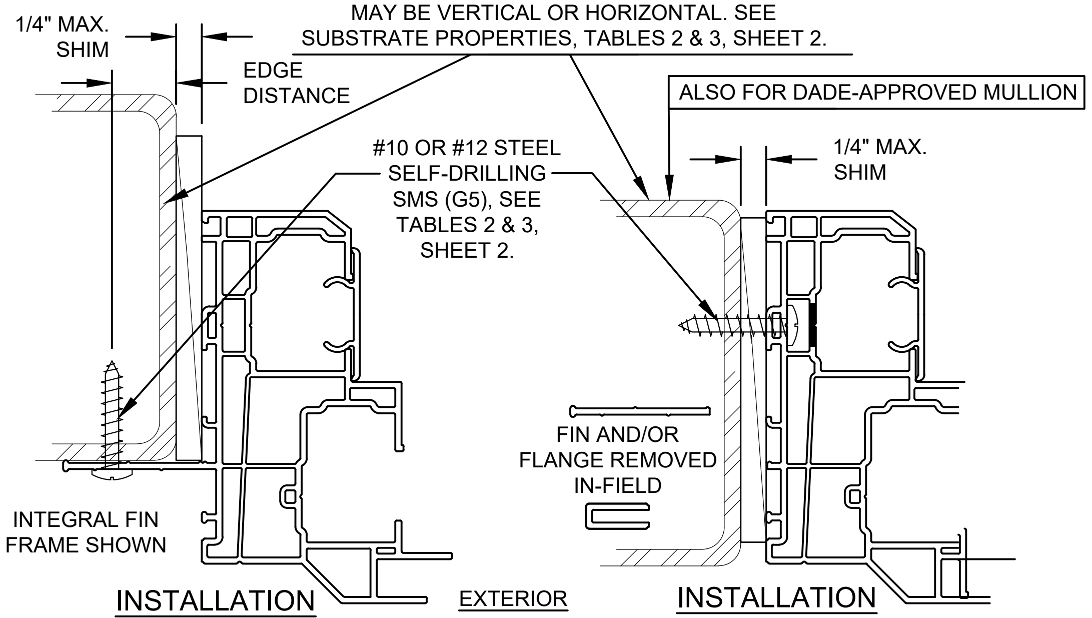
1/4" MAX. SHIM
EDGE DISTANCE
#10 OR #12 STEEL SELF-DRILLING SMS (G5), SEE TABLES 2 & 3, SHEET 2.
1/4" MAX. SHIM
FIN AND/OR FLANGE REMOVED IN-FIELD
INTEGRAL FIN FRAME SHOWN
EXTERIOR

INSTALLATION OPTION 7

ANCHORED THROUGH INTEGRAL FIN INTO METAL

INSTALLATION OPTION 8

ANCHORED THROUGH FRAME INTO METAL (INTEGRAL FIN/FLANGE REMOVED)

INSTALLATION OPTION 4 (FLANGE FRAME), ALLOWED WITH MULLION INSTALLATION, SEE PAGE 3 FOR DETAILS

PRODUCT REVISED
As complying with the Florida Building Code
NOA–No. 23-0816.18
Expiration Date: 09/17/2025
By: Manuel Perez
Miami–Dade Product Control

Revision:
D) ADD NOTE INSTALL OP. 4

PREPARED BY A. LYNN MILLER
1070 TECHNOLOGY DRIVE
N. VENICE, FL 34275
(941) 480-1600

REGISTRATION #29296

PGT
Custom Windows and Doors
1070 TECHNOLOGY DRIVE
N. VENICE, FL 34275
(941) 480-1600

Title	DOUBLE HUNG INSTALL (LM)
Date	05/15/15
Desc.	INST., INTEGRAL FIN & J-CH.
Drawn By	A. MORLESIN
Series	DH-5560
Sheet	4 OF 14
DWG No.	MD-DH5560-01
Rev.	D

No. 58705
8/10/23
A. LYNN MILLER, P.E.
P.E.# 58705

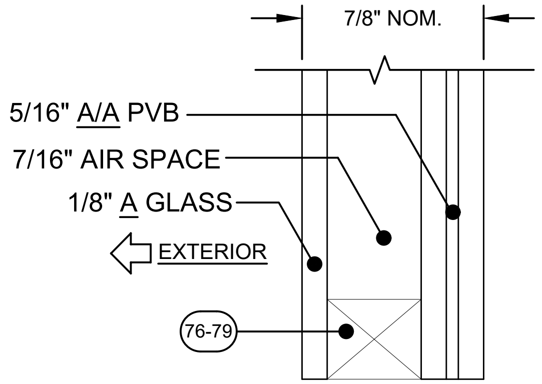
7/8" NOM.
5/16" A/A PVB
7/16" AIR SPACE
1/8" A GLASS
EXTERIOR
76-79

GLASS TYPE 5

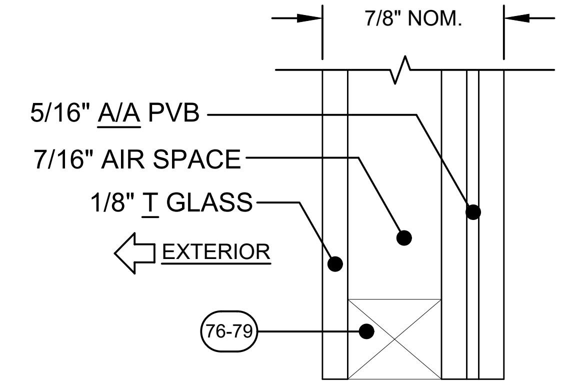
7/8" NOM.
5/16" A/A PVB
7/16" AIR SPACE
1/8" T GLASS
EXTERIOR
76-79

GLASS TYPE 6

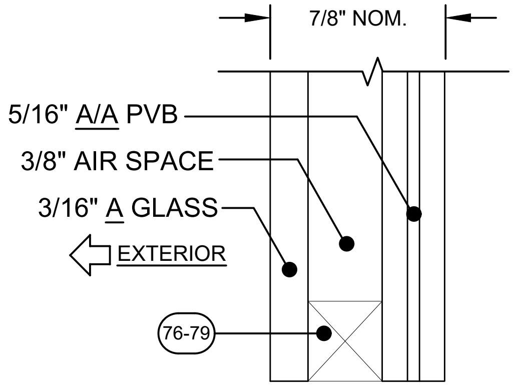
7/8" NOM.
5/16" A/A PVB
3/8" AIR SPACE
3/16" A GLASS
EXTERIOR
76-79

GLASS TYPE 7

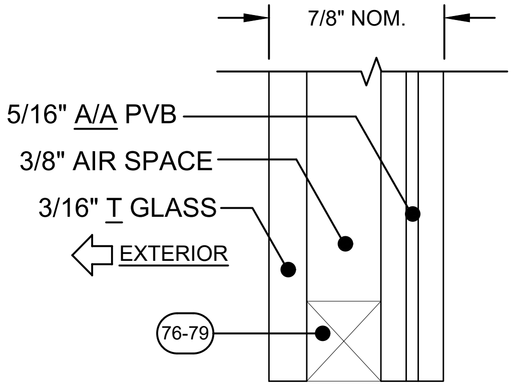
7/8" NOM.
5/16" A/A PVB
3/8" AIR SPACE
3/16" T GLASS
EXTERIOR
76-79

GLASS TYPE 8

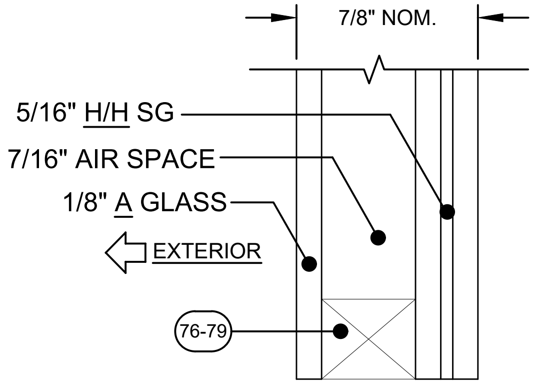
7/8" NOM.
5/16" H/H SG
7/16" AIR SPACE
1/8" A GLASS
EXTERIOR
76-79

GLASS TYPE 9

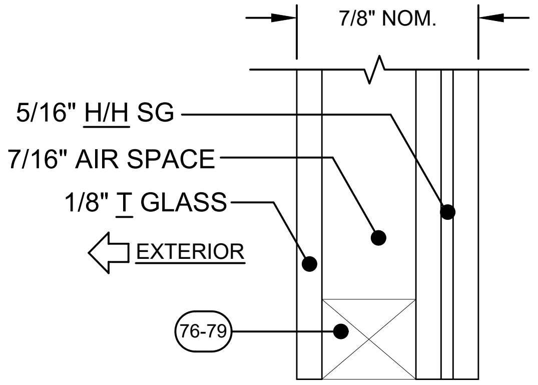
7/8" NOM.
5/16" H/H SG
7/16" AIR SPACE
1/8" T GLASS
EXTERIOR
76-79

GLASS TYPE 10

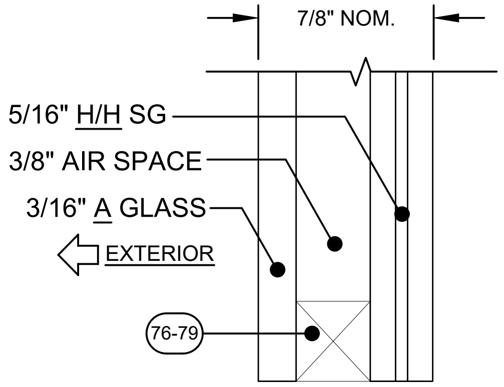
7/8" NOM.
5/16" H/H SG
3/8" AIR SPACE
3/16" A GLASS
EXTERIOR
76-79

GLASS TYPE 11

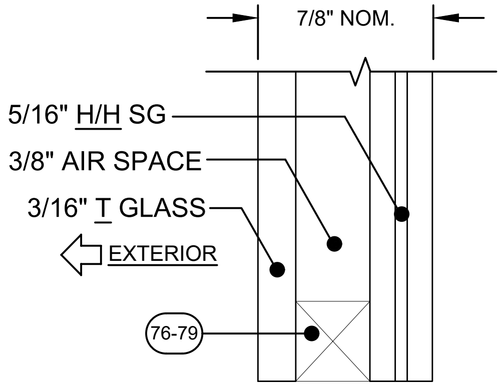
7/8" NOM.
5/16" H/H SG
3/8" AIR SPACE
3/16" T GLASS
EXTERIOR
76-79

GLASS TYPE 12

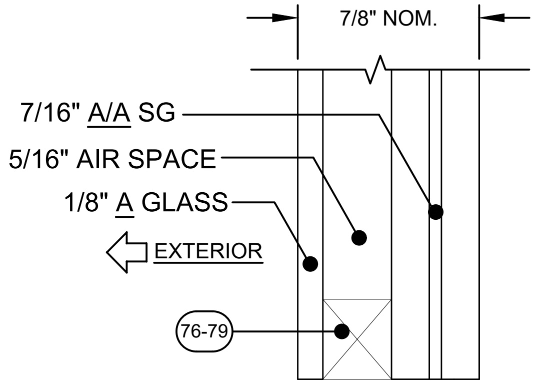
7/8" NOM.
7/16" A/A SG
5/16" AIR SPACE
1/8" A GLASS
EXTERIOR
76-79

GLASS TYPE 13

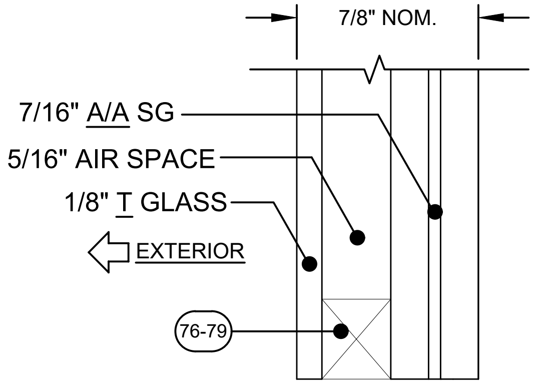
7/8" NOM.
7/16" A/A SG
5/16" AIR SPACE
1/8" T GLASS
EXTERIOR
76-79

GLASS TYPE 14

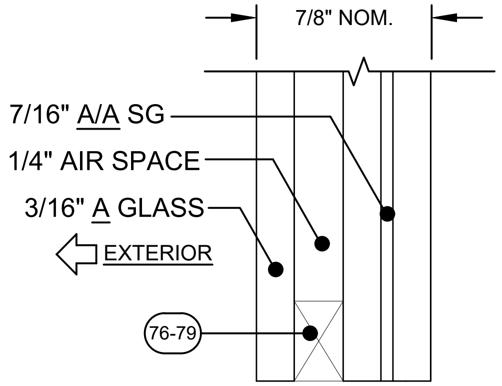
7/8" NOM.
7/16" A/A SG
1/4" AIR SPACE
3/16" A GLASS
EXTERIOR
76-79

GLASS TYPE 15

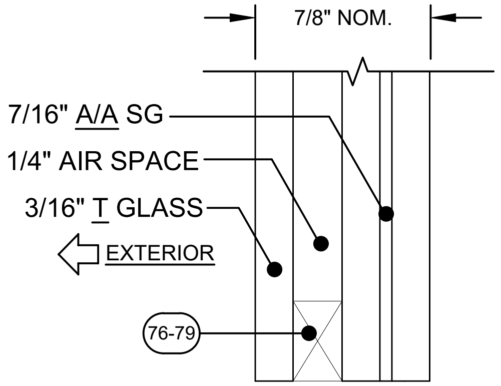
7/8" NOM.
7/16" A/A SG
1/4" AIR SPACE
3/16" T GLASS
EXTERIOR
76-79

GLASS TYPE 16

TYP. GLAZING DETAIL

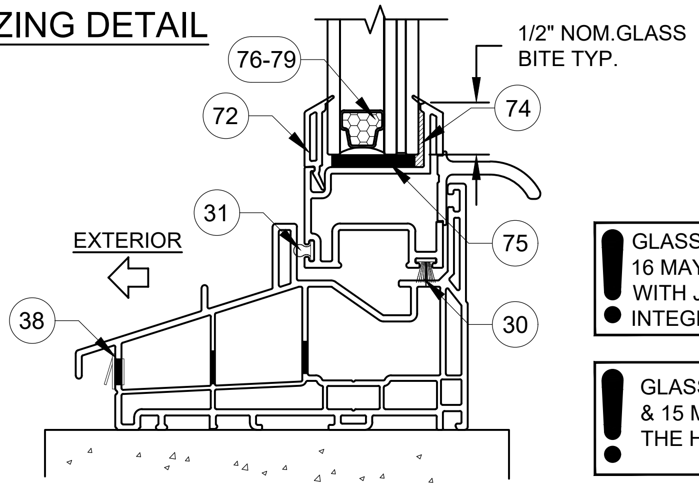
76-79
1/2" NOM.GLASS BITE TYP.
72
74
31
EXTERIOR
75
38
30

GLASS TYPES 9 THROUGH 16 MAY NOT BE USED WITH J-CHANNEL OR INTEGRAL FIN FRAMES

GLASS TYPES 5, 7, 9, 11, 13 & 15 MAY NOT BE USED IN THE HVHZ ABOVE 30'.

GLAZING NOTES:
"A" = ANNEALED
"H" = HEAT STRENGTHENED
"T" = TEMPERED
"PVB" = .090" TROSIFOL® PVB BY KURARAY AMERICA, INC.
"SG" = .090" SENTRYGLAS® INTERLAYER BY KURARAY AMERICA, INC.

FOR LAMINATED GLAZING COMPONENTS, SEE TABLE 1, SHEET 2.

PRODUCT REVISED
As complying with the Florida Building Code
NOA-No. 23-0816.18
Expiration Date: 09/17/2025
By: Manuel Perez
Miami-Dade Product Control

Revision: D) NO CHANGES IN THIS SHEET.

PREPARED BY A. LYNN MILLER
1070 TECHNOLOGY DRIVE
N. VENICE, FL 34275
(941) 480-1600
REGISTRATION #29296

PGT
Custom Windows and Doors
1070 TECHNOLOGY DRIVE
N. VENICE, FL 34275
(941) 480-1600

Title	DOUBLE HUNG INSTALL (LM)
Date	05/15/15
Drawn By	A. MORLESIN
Desc.	GLAZING DETAILS.
Series	DH-5560
Sheet	5 OF 14
DWG No.	MD-DH5560-01
Rev.	D

ANTHONY LYNN MILLER
LICENSE No. 58705
A Lynn Miller
8/10/23

A. LYNN MILLER, P.E.
P.E.# 58705

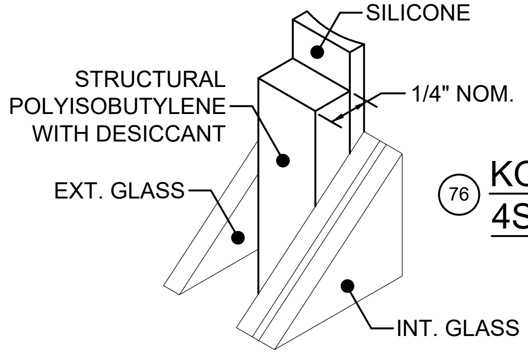
SILICONE
STRUCTURAL POLYISOBUTYLENE WITH DESICCANT
1/4" NOM.
EXT. GLASS
INT. GLASS

(76) KODISPACE 4SG TPS

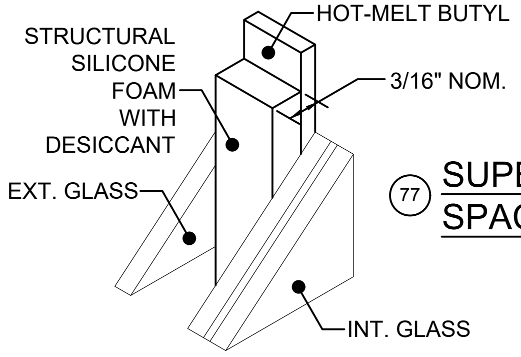
HOT-MELT BUTYL
STRUCTURAL SILICONE FOAM WITH DESICCANT
3/16" NOM.
EXT. GLASS
INT. GLASS

(77) SUPER SPACER® NXT™

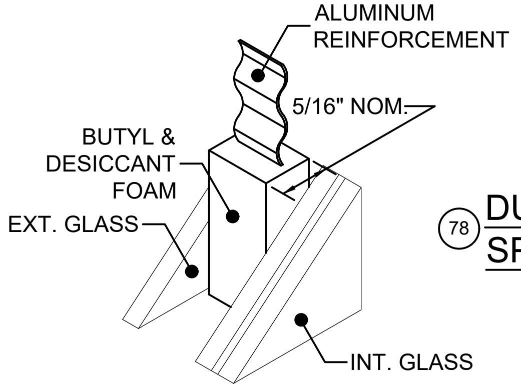
ALUMINUM REINFORCEMENT
5/16" NOM.
BUTYL & DESICCANT FOAM
EXT. GLASS
INT. GLASS

(78) DURASEAL® SPACER

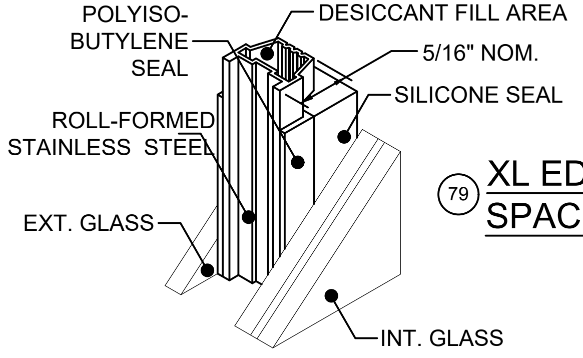
POLYISO-BUTYLENE SEAL
DESICCANT FILL AREA
5/16" NOM.
SILICONE SEAL
ROLL-FORMED STAINLESS STEEL
EXT. GLASS
INT. GLASS

(79) XL EDGE™ SPACER

Part #	Description	Material
76	Kommerling 4SG TPS Spacer System	See this Sheet for Materials
77	Quanex Super Spacer nXT with Hot Melt Butyl	
78	Quanex Duraseal Spacer	
79	Cardinal XL Edge Spacer	

REFERENCE TEST REPORTS: FTL-8717, 8968 & 8970

TABLE 4:

Glass Types: 5, 6, 7 & 8	Design Pressure, lbs/ft^2
	+50.0 / -50.0
Reinforcement Level: R1	For all window & sash sizes per Table 8

SEE TABLE 8, SHEET 8 FOR ANCHOR GROUP AND QUANTITY.

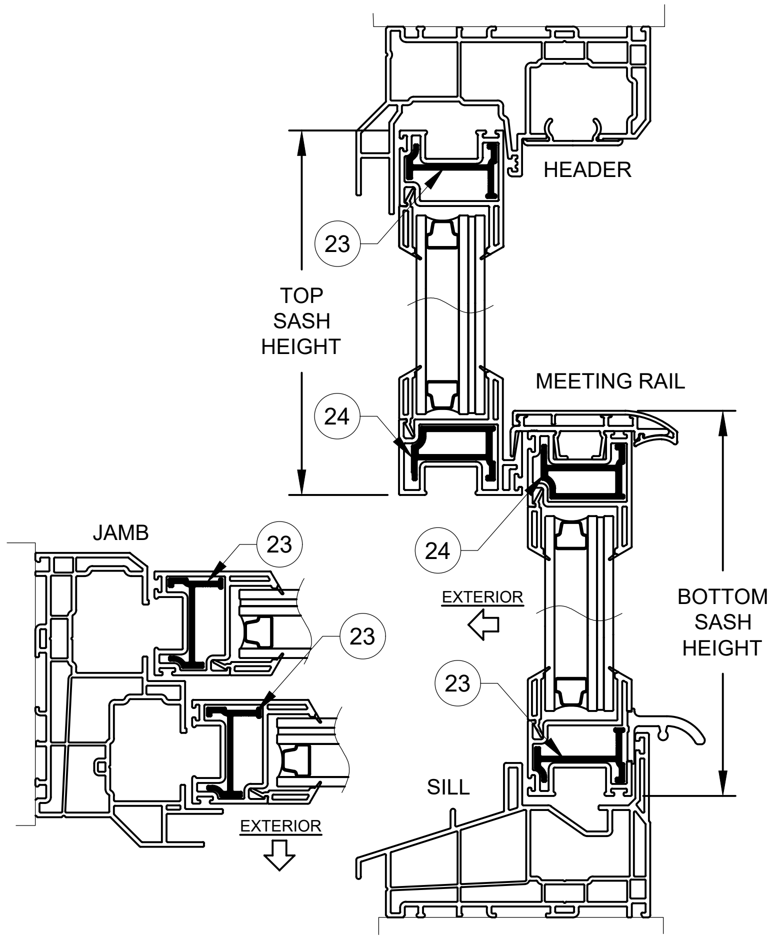
HEADER
23
TOP SASH HEIGHT
24
MEETING RAIL
JAMB
23
24
EXTERIOR
BOTTOM SASH HEIGHT
23
23
SILL
EXTERIOR

SECTION DETAIL FOR WINDOWS WITH LEVEL R1 REINFORCEMENT & GLASS TYPES 5-8

(REINFORCEMENTS SHOWN IN FIGURES ABOVE APPLY TO ALL FRAME TYPES & CONFIGURATIONS)

TABLE 5:

Glass Types: 5, 6, 7 & 8	Design Pressure, lbs/ft^2
	+65.0 / -70.0
Reinforcement Level: R2	For all window & sash sizes per Table 9

SEE TABLE 9, SHEET 9 FOR ANCHOR GROUP AND QUANTITY.

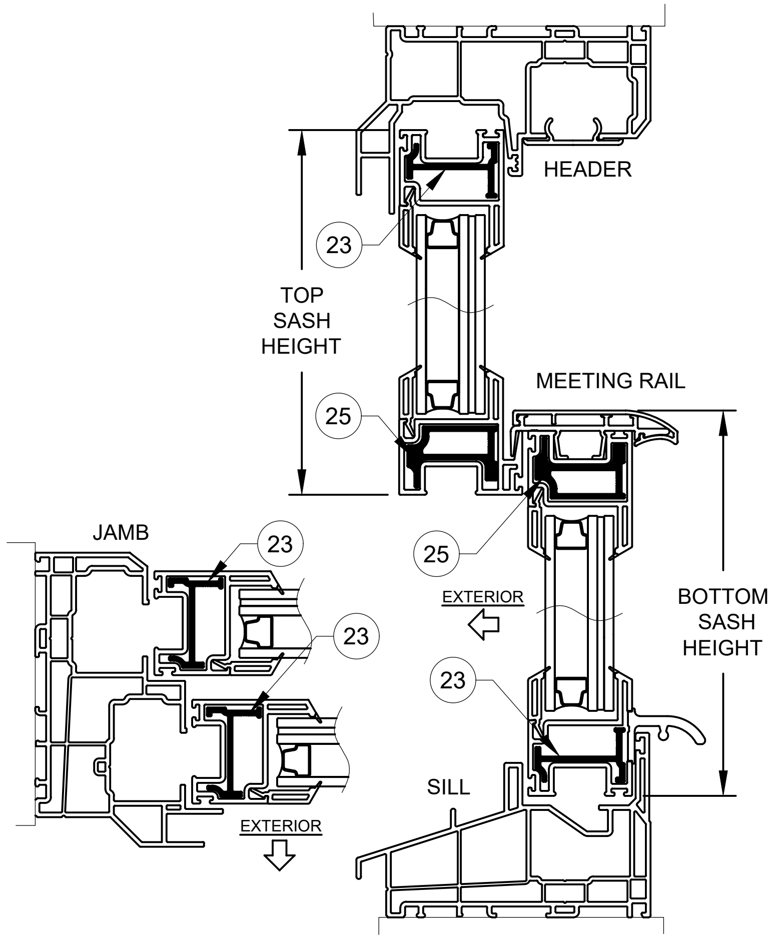
HEADER
23
TOP SASH HEIGHT
25
MEETING RAIL
JAMB
23
25
EXTERIOR
BOTTOM SASH HEIGHT
23
23
SILL
EXTERIOR

SECTION DETAIL FOR WINDOWS WITH LEVEL R2 REINFORCEMENT & GLASS TYPES 5-8

(REINFORCEMENTS SHOWN IN FIGURES ABOVE APPLY TO ALL FRAME TYPES & CONFIGURATIONS)

NOTES:

1) USE THESE TABLES FOR ALL WINDOWS INSTALLED THROUGH THE FRAME OR INTEGRAL FIN.

2) FRAME DIMENSIONS ARE BUCK. SASH HEIGHT IS AS PER THE FIGURE.

3) FOR SIZES NOT SHOWN, ROUND UP TO THE NEXT AVAILABLE WIDTH OR HEIGHT DIMENSION SHOWN ON THE TABLE.

PRODUCT REVISED
As complying with the Florida Building Code
NOA-No. 23-0816.18
Expiration Date: 09/17/2025
By: Manuel Perez
Miami-Dade Product Control

Revision: D) NO CHANGES IN THIS SHEET.

PREPARED BY A. LYNN MILLER
1070 TECHNOLOGY DRIVE
N. VENICE, FL 34275
(941) 480-1600

REGISTRATION #29296

PGT
Custom Windows and Doors
1070 TECHNOLOGY DRIVE
N. VENICE, FL 34275
(941) 480-1600

Date	05/15/15
Drwn By	A. MORLESIN
DWG No.	MD-DH5560-01
Rev.	D
Title	DOUBLE HUNG INSTALL (LM)
Desc.	SPACERS & DP TABLES
Sheet	6 OF 14
Series	DH-5560

No. 58705
A Lynn Miller
8/10/23

A. LYNN MILLER, P.E.
P.E.# 58705

TABLE 6:

Glass Types: 9, 10, 11 & 12 Reinforcement Level: R3	Bottom Sash Description for given Range @ Window Height Shown	Bottom Sash Height Range (in)	Final Design Pressure (lbs/ft²)					
			Window Buck Width (in)					
Window Buck Height (in)			48		52.125		54	
24	Equal-lite	11.266	+70.0	-110.0	+70.0	-110.0	+70.0	-109.0
28	Standard Cottage	13.517 - 15.516	+70.0	-110.0	+70.0	-107.0	+70.0	-104.0
	Equal-lite	11.517 - 13.516	+70.0	-110.0	+70.0	-110.0	+70.0	-110.0
	Standard Proview	11.266 - 11.516	+70.0	-110.0	+70.0	-110.0	+70.0	-110.0
37.375	Tallest	23.517 - 24.891	+70.0	-110.0	+70.0	-110.0	+70.0	-109.0
	Standard Cottage	20.517 - 23.516	+70.0	-110.0	+70.0	-110.0	+70.0	-110.0
	Equal-lite	18.016 - 20.516	+70.0	-110.0	+70.0	-110.0	+70.0	-110.0
	Standard Proview	11.517 - 18.015	+70.0	-110.0	+70.0	-110.0	+70.0	-110.0
	Shortest	11.266 - 11.516	+70.0	-110.0	+70.0	-110.0	+70.0	-110.0
44	Tallest	29.517 - 31.516	+70.0	-110.0	+70.0	-102.0	+70.0	-104.0
	Custom Size	26.517 - 29.516	+70.0	-110.0	+70.0	-110.0	+70.0	-110.0
	Standard Cottage	23.517 - 26.516	+70.0	-110.0	+70.0	-110.0	+70.0	-110.0
	Equal-lite	20.517 - 23.516	+70.0	-110.0	+70.0	-110.0	+70.0	-110.0
	Standard Proview	18.016 - 20.516	+70.0	-110.0	+70.0	-110.0	+70.0	-110.0
	Custom Size	11.517 - 18.015	+70.0	-110.0	+70.0	-110.0	+70.0	-110.0
	Shortest	11.266 - 11.516	+70.0	-110.0	+70.0	-110.0	+70.0	-110.0
48	Tallest	26.517 - 35.141	+70.0	-110.0	+70.0	-110.0	+70.0	-110.0
	Standard Cottage	23.517 - 26.516	+70.0	-110.0	+70.0	-110.0	+70.0	-110.0
	Equal-lite	20.517 - 23.516	+70.0	-110.0	+70.0	-110.0	+70.0	-110.0
	Standard Proview	18.016 - 20.516	+70.0	-110.0	+70.0	-110.0	+70.0	-110.0
	Custom Size	14.517 - 18.015	+70.0	-110.0	+70.0	-110.0	+70.0	-110.0
	Custom Size	11.517 - 14.516	+70.0	-110.0	+70.0	-110.0	+70.0	-110.0
	Shortest	11.266 - 11.516	+70.0	-110.0	+70.0	-110.0	+70.0	-110.0
49.625	Tallest	30.517 - 36.766	+70.0	-110.0	+70.0	-110.0	+70.0	-110.0
	Standard Cottage	27.517 - 30.516	+70.0	-110.0	+70.0	-110.0	+70.0	-110.0
	Custom Size	24.517 - 27.516	+70.0	-110.0	+70.0	-110.0	+70.0	-110.0
	Equal-lite	21.517 - 24.516	+70.0	-110.0	+70.0	-110.0	+70.0	-110.0
	Standard Proview	18.016 - 21.516	+70.0	-110.0	+70.0	-110.0	+70.0	-107.0
	Custom Size	14.517 - 18.015	+70.0	-110.0	+70.0	-110.0	+70.0	-110.0
	Custom Size	11.517 - 14.516	+70.0	-110.0	+70.0	-110.0	+70.0	-110.0
	Shortest	11.266 - 11.516	+70.0	-110.0	+70.0	-110.0	+70.0	-110.0
62	Standard Cottage	34.517 - 36.767	+70.0	-110.0	+70.0	-110.0	+70.0	-110.0
	Custom Size	32.517 - 34.516	+70.0	-110.0	+70.0	-110.0	+70.0	-110.0
	Equal-lite	29.517 - 32.516	+70.0	-110.0	+70.0	-110.0	+70.0	-110.0
	Custom Size	26.517 - 29.516	+70.0	-110.0	+70.0	-110.0	+70.0	-110.0
	Standard Proview	23.517 - 26.516	+70.0	-110.0	+70.0	-110.0	+70.0	-110.0
	Custom Size	21.016 - 23.516	+70.0	-110.0	+70.0	-110.0	+70.0	-110.0
	Custom Size	18.016 - 21.015	+70.0	-110.0	+70.0	-110.0	+70.0	-109.0
	Custom Size	14.517 - 18.015	+70.0	-110.0	+70.0	-110.0	+70.0	-110.0
	Shortest	11.516 - 14.516	+70.0	-110.0	+70.0	-110.0	+70.0	-110.0
75	Tallest	38.517 - 41.266	+70.0	-110.0	+70.0	-110.0	+70.0	-110.0
	Equal-lite	36.517 - 38.516	+70.0	-110.0	+70.0	-110.0	+70.0	-110.0
	Custom Size	34.517 - 36.516	+70.0	-110.0	+70.0	-110.0	+70.0	-110.0
	Custom Size	32.517 - 34.516	+70.0	-110.0	+70.0	-110.0	+70.0	-110.0
	Custom Size	30.517 - 32.516	+70.0	-110.0	+70.0	-110.0	+70.0	-110.0
	Standard Proview	28.517 - 30.516	+70.0	-110.0	+70.0	-110.0	+70.0	-110.0
	Custom Size	26.517 - 28.516	+70.0	-110.0	+70.0	-110.0	+70.0	-110.0
	Custom Size	24.516 - 26.516	+70.0	-110.0	+70.0	-110.0	+70.0	-110.0
84	Equal-lite	41.266	+70.0	-110.0	+70.0	-110.0	+70.0	-110.0
	Custom Size	38.517 - 41.265	+70.0	-110.0	+70.0	-110.0	+70.0	-110.0
	Custom Size	35.517 - 38.516	+70.0	-110.0	+70.0	-110.0	+70.0	-110.0
	Standard Proview	33.516 - 35.516	+70.0	-110.0	+70.0	-110.0	+70.0	-110.0

SEE TABLE 10, SHEET 10 FOR ANCHOR GROUP AND QUANTITY.
MIN. BOTTOM SASH HEIGHT = WINDOW BUCK HEIGHT - 50.484
(APPLIES TO ANY HEIGHT 84" OR LESS).

TABLE 7:

Glass Types: 13, 14, 15 & 16 Reinforcement Level: R3	Bottom Sash Description for given Range @ Window Height Shown	Bottom Sash Height Range (in)	Final Design Pressure (lbs/ft²)															
			Window Buck Width (in)															
Window Buck Height (in)			18		24		32		36		40		48		52.125		54	
24	Equal-lite	11.266	+70.0	-110.0	+70.0	-110.0	+70.0	-110.0	+70.0	-110.0	+70.0	-110.0	+70.0	-110.0	+70.0	-110.0	+70.0	-109.0
28	Standard Cottage	13.517 - 15.516	+70.0	-110.0	+70.0	-110.0	+70.0	-110.0	+70.0	-110.0	+70.0	-110.0	+70.0	-110.0	+70.0	-107.0	+70.0	-104.0
	Equal-lite	11.517 - 13.516	+70.0	-110.0	+70.0	-110.0	+70.0	-110.0	+70.0	-110.0	+70.0	-110.0	+70.0	-110.0	+70.0	-110.0	+70.0	-110.0
	Standard Proview	11.266 - 11.516	+70.0	-110.0	+70.0	-110.0	+70.0	-110.0	+70.0	-110.0	+70.0	-110.0	+70.0	-110.0	+70.0	-110.0	+70.0	-110.0
37.375	Tallest	23.517 - 24.891	+70.0	-110.0	+70.0	-110.0	+70.0	-110.0	+70.0	-110.0	+70.0	-110.0	+70.0	-110.0	+70.0	-110.0	+70.0	-109.0
	Standard Cottage	20.517 - 23.516	+70.0	-110.0	+70.0	-110.0	+70.0	-110.0	+70.0	-110.0	+70.0	-110.0	+70.0	-110.0	+70.0	-110.0	+70.0	-110.0
	Equal-lite	18.016 - 20.516	+70.0	-110.0	+70.0	-110.0	+70.0	-110.0	+70.0	-110.0	+70.0	-110.0	+70.0	-110.0	+70.0	-110.0	+70.0	-110.0
	Standard Proview	11.517 - 18.015	+70.0	-110.0	+70.0	-110.0	+70.0	-110.0	+70.0	-110.0	+70.0	-110.0	+70.0	-110.0	+70.0	-110.0	+70.0	-110.0
	Shortest	11.266 - 11.516	+70.0	-110.0	+70.0	-110.0	+70.0	-110.0	+70.0	-110.0	+70.0	-110.0	+70.0	-110.0	+70.0	-110.0	+70.0	-110.0
44	Tallest	29.517 - 31.516	+70.0	-110.0	+70.0	-110.0	+70.0	-110.0	+70.0	-110.0	+70.0	-110.0	+70.0	-110.0	+70.0	-102.0	+70.0	-104.0
	Custom Size	26.517 - 29.516	+70.0	-110.0	+70.0	-110.0	+70.0	-110.0	+70.0	-110.0	+70.0	-110.0	+70.0	-110.0	+70.0	-110.0	+70.0	-110.0
	Standard Cottage	23.517 - 26.516	+70.0	-110.0	+70.0	-110.0	+70.0	-110.0	+70.0	-110.0	+70.0	-110.0	+70.0	-110.0	+70.0	-110.0	+70.0	-110.0
	Equal-lite	20.517 - 23.516	+70.0	-110.0	+70.0	-110.0	+70.0	-110.0	+70.0	-110.0	+70.0	-110.0	+70.0	-110.0	+70.0	-110.0	+70.0	-110.0
	Standard Proview	18.016 - 20.516	+70.0	-110.0	+70.0	-110.0	+70.0	-110.0	+70.0	-110.0	+70.0	-110.0	+70.0	-110.0	+70.0	-110.0	+70.0	-110.0
	Custom Size	11.517 - 18.015	+70.0	-110.0	+70.0	-110.0	+70.0	-110.0	+70.0	-110.0	+70.0	-110.0	+70.0	-110.0	+70.0	-110.0	+70.0	-110.0
	Shortest	11.266 - 11.516	+70.0	-110.0	+70.0	-110.0	+70.0	-110.0	+70.0	-110.0	+70.0	-110.0	+70.0	-110.0	+70.0	-110.0	+70.0	-110.0
48	Tallest	26.517 - 35.141	+70.0	-110.0	+70.0	-110.0	+70.0	-110.0	+70.0	-110.0	+70.0	-110.0	+70.0	-110.0	+70.0	-110.0	+70.0	-110.0
	Standard Cottage	23.517 - 26.516	+70.0	-110.0	+70.0	-110.0	+70.0	-110.0	+70.0	-110.0	+70.0	-110.0	+70.0	-110.0	+70.0	-110.0	+70.0	-110.0
	Equal-lite	20.517 - 23.516	+70.0	-110.0	+70.0	-110.0	+70.0	-110.0	+70.0	-110.0	+70.0	-110.0	+70.0	-110.0	+70.0	-110.0	+70.0	-110.0
	Standard Proview	18.016 - 20.516	+70.0	-110.0	+70.0	-110.0	+70.0	-110.0	+70.0	-110.0	+70.0	-110.0	+70.0	-110.0	+70.0	-110.0	+70.0	-110.0
	Custom Size	14.517 - 18.015	+70.0	-110.0	+70.0	-110.0	+70.0	-110.0	+70.0	-110.0	+70.0	-110.0	+70.0	-110.0	+70.0	-110.0	+70.0	-110.0
	Custom Size	11.517 - 14.516	+70.0	-110.0	+70.0	-110.0	+70.0	-110.0	+70.0	-110.0	+70.0	-110.0	+70.0	-110.0	+70.0	-110.0	+70.0	-110.0
	Shortest	11.266 - 11.516	+70.0	-110.0	+70.0	-110.0	+70.0	-110.0	+70.0	-110.0	+70.0	-110.0	+70.0	-110.0	+70.0	-110.0	+70.0	-110.0
49.625	Tallest	30.517 - 36.766	+70.0	-110.0	+70.0	-110.0	+70.0	-110.0	+70.0	-110.0	+70.0	-110.0	+70.0	-110.0	+70.0	-110.0	+70.0	-110.0
	Standard Cottage	27.517 - 30.516	+70.0	-110.0	+70.0	-110.0	+70.0	-110.0	+70.0	-110.0	+70.0	-110.0	+70.0	-110.0	+70.0	-110.0	+70.0	-110.0
	Custom Size	24.517 - 27.516	+70.0	-110.0	+70.0	-110.0	+70.0	-110.0	+70.0	-110.0	+70.0	-110.0	+70.0	-110.0	+70.0	-110.0	+70.0	-110.0
	Equal-lite	21.517 - 24.516	+70.0	-110.0	+70.0	-110.0	+70.0	-110.0	+70.0	-110.0	+70.0	-110.0	+70.0	-110.0	+70.0	-110.0	+70.0	-110.0
	Standard Proview	18.016 - 21.516	+70.0	-110.0	+70.0	-110.0	+70.0	-110.0	+70.0	-110.0	+70.0	-110.0	+70.0	-110.0	+70.0	-110.0	+70.0	-107.0
	Custom Size	14.517 - 18.015	+70.0	-110.0	+70.0	-110.0	+70.0	-110.0	+70.0	-110.0	+70.0	-110.0	+70.0	-110.0	+70.0	-110.0	+70.0	-110.0
	Custom Size	11.517 - 14.516	+70.0	-110.0	+70.0	-110.0	+70.0	-110.0	+70.0	-110.0	+70.0	-110.0	+70.0	-110.0	+70.0	-110.0	+70.0	-110.0
	Shortest	11.266 - 11.516	+70.0	-110.0	+70.0	-110.0	+70.0	-110.0	+70.0	-110.0	+70.0	-110.0	+70.0	-110.0	+70.0	-110.0	+70.0	-110.0
62	Standard Cottage	34.517 - 36.767	+70.0	-110.0	+70.0	-110.0	+70.0	-110.0	+70.0	-110.0	+70.0	-110.0	+70.0	-110.0	+70.0	-109.1	+70.0	-103.7
	Custom Size	32.517 - 34.516	+70.0	-110.0	+70.0	-110.0	+70.0	-110.0	+70.0	-110.0	+70.0	-110.0	+70.0	-110.0	+70.0	-108.5	+70.0	-103.1
	Equal-lite	29.517 - 32.516	+70.0	-110.0	+70.0	-110.0	+70.0	-110.0	+70.0	-110.0	+70.0	-110.0	+70.0	-110.0	+70.0	-107.0	+70.0	-101.7
	Custom Size	26.517 - 29.516	+70.0	-110.0	+70.0	-110.0	+70.0	-110.0	+70.0	-110.0	+70.0	-110.0	+70.0	-110.0	+70.0	-107.2	+70.0	-101.9
	Standard Proview	23.517 - 26.516	+70.0	-110.0	+70.0	-110.0	+70.0	-110.0	+70.0	-110.0	+70.0	-110.0	+70.0	-110.0	+70.0	-108.2	+70.0	-102.8
	Custom Size	21.016 - 23.516	+70.0	-110.0	+70.0	-110.0	+70.0	-103.8	+70.0	-100.6	+70.0	-99.6	+70.0	-99.6	+70.0	-99.6	+70.0	-99.6
	Custom Size	18.016 - 21.015	+70.0	-110.0	+70.0	-110.0	+70.0	-110.0	+70.0	-108.9	+70.0	-106.5	+70.0	-106.0	+70.0	-97.8	+70.0	-92.7
	Custom Size	14.517 - 18.015	+70.0	-110.0	+70.0	-110.0	+70.0	-100.5	+70.0	-95.6	+70.0	-92.5	+70.0	-90.6	+70.0	-90.6	+70.0	-90.6
	Shortest	11.516 - 14.516	+70.0	-110.0	+70.0	-109.0	+70.0	-91.5	+70.0	-86.5	+70.0	-83.1	+70.0	-80.1	+70.0	-80.0	+70.0	-80.0
75	Tallest	38.517 - 41.266	+70.0	-110.0	+70.0	-110.0	+70.0	-95.6	+70.0	-92.0	+70.0	-90.2	+70.0	-90.0	+70.0	-90.0	+70.0	-90.0
	Equal-lite	36.517 - 38.516	+70.0	-110.0	+70.0	-110.0	+70.0	-106.8	+70.0	-103.8	+70.0	-103.0	+70.0	-103.0	+70.0	-98.6	+70.0	-93.3
	Custom Size	34.517 - 36.516	+70.0	-110.0	+70.0	-110.0	+70.0	-106.0	+70.0	-103.0	+70.0	-102.1	+70.0	-102.1	+70.0	-98.6	+70.0	-93.3
	Custom Size	32.517 - 34.516	+70.0	-110.0	+70.0	-110.0	+70.0	-97.7	+70.0	-94.2	+70.0	-92.7	+70.0	-92.6	+70.0	-92.6	+70.0	-92.6
	Custom Size	30.517 - 32.516	+70.0	-110.0	+70.0	-110.0	+70.0	-110.0	+70.0	-106.8	+70.0	-104.3	+70.0	-99.3	+70.0	-86.7	+70.0	-82.0
	Standard Proview	28.517 - 30.516	+70.0	-110.0	+70.0	-110.0	+70.0	-103.9	+70.0	-99.0	+70.0	-96.1	+70.0	-94.7	+70.0	-87.5	+70.0	-82.7
	Custom Size	26.517 - 28.516	+70.0	-110.0	+70.0	-110.0	+70.0	-97.3	+70.0	-92.3	+70.0	-89.1	+70.0	-86.9	+70.0	-86.9	+70.0	-83.7
	Custom Size	24.516 - 26.516	+70.0	-110.0	+70.0	-109.0	+70.0	-91.5	+70.0	-86.5	+70.0	-83.1	+70.0	-80.1	+70.0	-80.0	+70.0	-80.0
84	Equal-lite	41.266	+70.0	-110.0	+70.0	-110.0	+70.0	-95.6	+70.0	-92.0	+70.0	-90.2	+70.0	-90.0	+70.0	-90.0	+70.0	-90.0
	Custom Size	38.517 - 41.265	+70.0	-110.0	+70.0	-110.0	+70.0	-103.9	+70.0	-99.0	+70.0	-96.1	+70.0	-94.7	+70.0	-82.1	+66.8	-76.4
	Custom Size	35.517 - 38.516	+70.0	-110.0	+70.0	-109.0	+70.0	-91.5	+70.0	-86.5	+70.0	-83.1	+70.0	-80.1	+70.0	-80.0	+67.7	-77.3
	Standard Proview	33.516 - 35.516	+70.0	-110.0	+70.0	-109.0	+70.0	-91.5	+70.0	-86.5	+70.0	-83.1	+70.0	-80.1	+70.0	-80.0	+70.0	-80.0

SEE TABLE 11, SHEET 11 FOR ANCHOR GROUP AND QUANTITY.
MIN. BOTTOM SASH HEIGHT = WINDOW BUCK HEIGHT - 50.484
(APPLIES TO ANY HEIGHT 84" OR LESS).

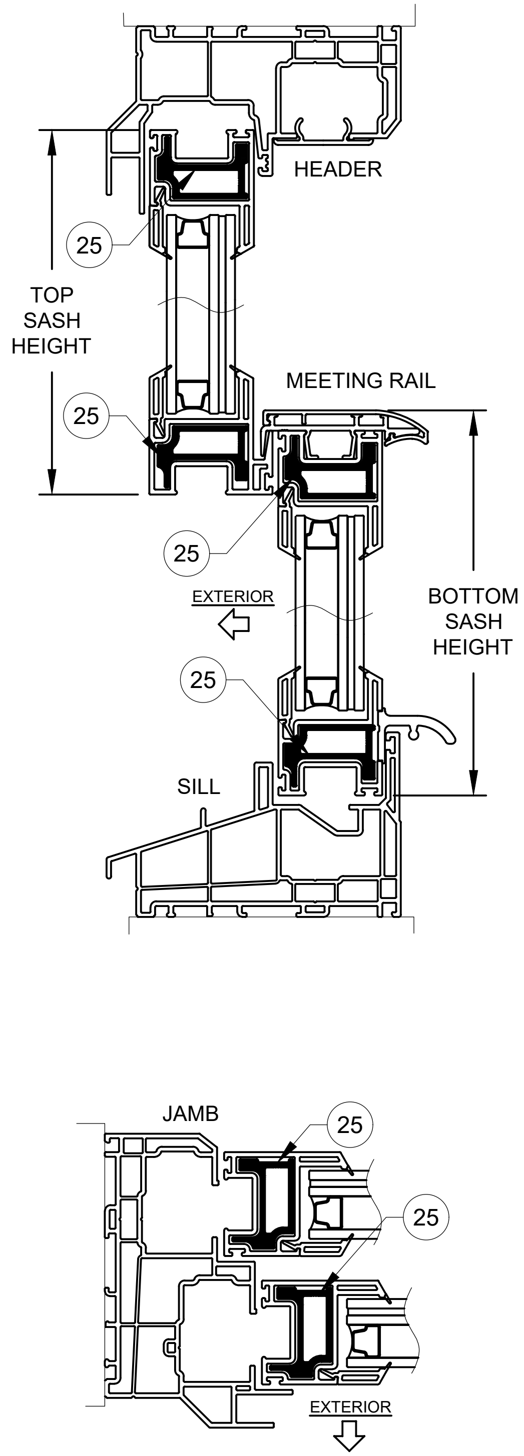

SECTION DETAIL FOR WINDOWS WITH LEVEL R3 REINFORCEMENT & GLASS TYPES 9-16

(REINFORCEMENTS SHOWN IN FIGURES ABOVE APPLY TO FLANGE & BOX/EQUAL-LEG FRAME TYPES ONLY. ALL CONFIGURATIONS APPLICABLE.)

! GLASS TYPES 9 THROUGH 16 MAY NOT BE USED WITH J-CHANNEL OR INTEGRAL FIN FRAMES

NOTES:

1) USE THESE TABLES FOR WINDOWS INSTALLED THROUGH THE FRAME.

2) FRAME DIMENSIONS ARE BUCK. SASH HEIGHT IS AS PER THE FIGURE.

3) FOR SIZES NOT SHOWN, ROUND UP TO THE NEXT AVAILABLE WIDTH OR HEIGHT DIMENSION SHOWN ON THE TABLE.

PRODUCT REVISED
As complying with the Florida Building Code
NOA–No. 23-0816.18
Expiration Date: 09/17/2025
By: Manuel Perez
Miami–Dade Product Control

Revision:
D) NO CHANGES IN THIS SHEET.

PREPARED BY A. LYNN MILLER
1070 TECHNOLOGY DRIVE
N. VENICE, FL 34275
(941) 480-1600

REGISTRATION #29296

Custom Windows and Doors
1070 TECHNOLOGY DRIVE
N. VENICE, FL 34275
(941) 480-1600

Title: DOUBLE HUNG INSTALL (LM)
Date: 05/15/15
Desc.: ANCHOR QUANTITY TABLE.
Drawn By: A. MORLESIN
Series: DH-5560
Sheet: 7 OF 14
DWG No.: MD-DH5560-01
Rev.: D

No. 58705
A. Lynn Miller
8/10/23
A. LYNN MILLER, P.E.
P.E.# 58705

TABLE 8:

FOR ANCHOR GROUP D, TABLE 9, SHEET 9 MAY BE USED.

Anchor Quantities Required for "Through-Frame" Installation			Anchor Group A																					Anchor Group B																					Anchor Group C																				
Glass Types: 5, 6, 7 & 8 Reinforcement Level: R1			18" Wide			24" Wide			32" Wide			36" Wide			40" Wide			48" Wide			52-1/8" Wide			18" Wide			24" Wide			32" Wide			36" Wide			40" Wide			48" Wide			52-1/8" Wide			18" Wide			24" Wide			32" Wide			36" Wide			40" Wide			48" Wide			52-1/8" Wide		
			Jamb			Jamb			Jamb			Jamb			Jamb			Jamb			Jamb			Jamb			Jamb			Jamb			Jamb			Jamb			Jamb			Jamb			Jamb			Jamb			Jamb			Jamb			Jamb			Jamb		
Window Buck Height (in)	Bottom Sash Description for given Range @ Window Height Shown	Bottom Sash Height Range (in)	Above MR	Below MR	Header	Above MR	Below MR	Header	Above MR	Below MR	Header	Above MR	Below MR	Header	Above MR	Below MR	Header	Above MR	Below MR	Header	Above MR	Below MR	Header	Above MR	Below MR	Header	Above MR	Below MR	Header	Above MR	Below MR	Header	Above MR	Below MR	Header	Above MR	Below MR	Header	Above MR	Below MR	Header	Above MR	Below MR	Header	Above MR	Below MR	Header	Above MR	Below MR	Header	Above MR	Below MR	Header	Above MR	Below MR	Header	Above MR	Below MR	Header	Above MR	Below MR	Header	Above MR	Below MR	Header
24	Equal-lite	11.266	1	2	1	1	2	1	1	2	2	1	2	2	1	2	2	1	2	2	1	2	2	1	2	1	1	2	1	1	2	2	1	2	2	1	2	2	1	2	2	1	2	2	1	2	1	1	2	1	1	2	2	1	2	2	1	2	2	1	2	2	1	2	2
28	Standard Cottage	13.517 - 15.516	1	2	1	1	2	1	1	2	2	1	2	2	1	2	2	1	2	2	1	2	2	1	2	1	1	2	1	1	2	2	1	2	2	1	2	2	1	2	2	1	2	2	1	2	1	1	2	1	1	2	2	1	2	2	1	2	2	1	2	2	1	2	2
	Equal-lite	11.517 - 13.516	1	2	1	1	2	1	1	2	2	1	2	2	1	2	2	1	2	2	1	2	2	1	2	1	1	2	1	1	2	2	1	2	2	1	2	2	1	2	2	1	2	2	1	2	1	1	2	1	1	2	2	1	2	2	1	2	2	1	2	2	1	2	2
	Standard Proview	11.266 - 11.516	1	2	1	1	2	1	1	2	2	1	2	2	1	2	2	1	2	2	1	2	2	1	2	1	1	2	1	1	2	2	1	2	2	1	2	2	1	2	2	1	2	2	1	2	1	1	2	1	1	2	2	1	2	2	1	2	2	1	2	2	1	2	2
37.375	Tallest	21.517 - 24.891	1	2	1	1	2	1	1	2	2	1	2	2	1	2	2	1	2	2	1	3	2	1	2	1	1	2	1	1	2	2	1	2	2	1	2	2	1	2	2	1	2	2	1	2	1	1	2	1	1	2	2	1	2	2	1	2	2	1	2	2	1	2	2
	Standard Cottage	18.017 - 21.516	2	2	1	2	2	1	2	2	2	2	2	2	2	2	2	2	2	2	2	2	2	2	2	1	2	2	1	2	2	2	2	2	2	2	2	2	2	2	2	2	2	2	2	2	1	2	2	1	2	2	2	2	2	2	2	2	2	2	2	2	2	2	2
	Equal-lite	15.017 - 18.016	2	2	1	2	2	1	2	2	2	2	2	2	2	2	2	2	2	2	2	2	2	2	2	1	2	2	1	2	2	2	2	2	2	2	2	2	2	2	2	2	2	2	2	2	1	2	2	1	2	2	2	2	2	2	2	2	2	2	2	2	2	2	2
	Standard Proview	11.517 - 15.016	3	2	1	3	2	1	3	2	2	3	2	2	3	2	2	3	2	2	3	2	2	3	2	1	3	2	1	3	2	2	3	2	2	3	2	2	3	2	2	3	2	2	3	2	1	3	2	1	3	2	2	3	2	2	3	2	2	3	2	2	3	2	2
	Shortest	11.266 - 11.516	3	2	1	3	2	1	3	2	2	3	2	2	3	2	2	3	2	2	3	2	2	3	2	1	3	2	1	3	2	2	3	2	2	3	2	2	3	2	2	3	2	2	3	2	1	3	2	1	3	2	2	3	2	2	3	2	2	3	2	2	3	2	2
44	Tallest	29.517 - 31.516	1	3	1	1	3	1	1	3	2	1	3	2	1	3	2	1	3	2	1	3	2	1	3	1	1	3	1	1	3	2	1	3	2	1	3	2	1	3	2	1	3	2	1	3	1	1	3	1	1	3	2	1	3	2	1	3	2	1	3	2	1	3	2
	Custom Size	26.517 - 29.516	2	3	1	2	3	1	2	3	2	2	3	2	2	3	2	2	3	2	2	3	2	2	3	1	2	3	1	2	3	2	2	3	2	2	3	2	2	3	2	2	3	2	2	3	1	2	3	1	2	3	2	2	3	2	2	3	2	2	3	2	2	3	2
	Standard Cottage	23.517 - 26.516	2	3	1	2	3	1	2	3	2	2	3	2	2	3	2	2	3	2	2	3	2	2	3	1	2	3	1	2	3	2	2	3	2	2	3	2	2	3	2	2	3	2	2	3	1	2	3	1	2	3	2	2	3	2	2	3	2	2	3	2	2	3	2
	Equal-lite	20.517 - 23.516	2	2	1	2	2	1	2	2	2	2	2	2	2	2	2	2	2	2	2	2	2	2	2	1	2	2	1	2	2	2	2	2	2	2	2	2	2	2	2	2	2	2	2	2	1	2	2	1	2	2	2	2	2	2	2	2	2	2	2	2	2	2	2
	Custom Size	18.016 - 20.516	3	2	1	3	2	1	3	2	2	3	2	2	3	2	2	3	2	2	3	2	2	3	2	1	3	2	1	3	2	2	3	2	2	3	2	2	3	2	2	3	2	2	3	2	1	3	2	1	3	2	2	3	2	2	3	2	2	3	2	2	3	2	2
	Standard Proview	11.517 - 18.015	3	2	1	3	2	1	3	2	2	3	2	2	3	2	2	3	2	2	3	2	2	3	2	1	3	2	1	3	2	2	3	2	2	3	2	2	3	2	2	3	2	2	3	2	1	3	2	1	3	2	2	3	2	2	3	2	2	3	2	2	3	2	2
	Shortest	11.266 - 11.516	3	2	1	3	2	1	3	2	2	3	2	2	3	2	2	3	2	2	3	2	2	3	2	1	3	2	1	3	2	2	3	2	2	3	2	2	3	2	2	3	2	2	3	2	1	3	2	1	3	2	2	3	2	2	3	2	2	3	2	2	3	2	2
48	Tallest	27.517 - 35.141	2	3	1	2	3	1	2	3	2	2	3	2	2	3	2	2	3	2	2	3	2	2	3	1	2	3	1	2	3	2	2	3	2	2	3	2	2	3	2	2	3	2	2	3	1	2	3	1	2	3	2	2	3	2	2	3	2	2	3	2	2	3	2
	Standard Cottage	23.517 - 27.516	2	3	1	2	3	1	2	3	2	2	3	2	2	3	2	2	3	2	2	3	2	2	3	1	2	3	1	2	3	2	2	3	2	2	3	2	2	3	2	2	3	2	2	3	1	2	3	1	2	3	2	2	3	2	2	3	2	2	3	2	2	3	2
	Equal-lite	20.517 - 23.516	3	2	1	3	2	1	3	2	2	3	2	2	3	2	2	3	2	2	3	2	2	3	2	1	3	2	1	3	2	2	3	2	2	3	2	2	3	2	2	3	2	2	3	2	1	3	2	1	3	2	2	3	2	2	3	2	2	3	2	2	3	2	2
	Standard Proview	18.016 - 20.516	3	2	1	3	2	1	3	2	2	3	2	2	3	2	2	3	2	2	3	2	2	3	2	1	3	2	1	3	2	2	3	2	2	3	2	2	3	2	2	3	2	2	3	2	1	3	2	1	3	2	2	3	2	2	3	2	2	3	2	2	3	2	2
	Custom Size	14.517 - 18.015	3	2	1	3	2	1	3	2	2	3	2	2	3	2	2	3	2	2	3	2	2	3	2	1	3	2	1	3	2	2	3	2	2	3	2	2	3	2	2	3	2	2	3	2	1	3	2	1	3	2	2	3	2	2	3	2	2	3	2	2	3	2	2
	Custom Size	11.517 - 14.516	3	2	1	3	2	1	3	2	2	3	2	2	3	2	2	3	2	2	3	2	2	3	2	1	3	2	1	3	2	2	3	2	2	3	2	2	3	2	2	3	2	2	3	2	1	3	2	1	3	2	2	3	2	2	3	2	2	3	2	2	3	2	2
	Shortest	11.266 - 11.516	3	2	1	3	2	1	3	2	2	3	2	2	3	2	2	3	2	2	3	2	2	3	2	1	3	2	1	3	2	2	3	2	2	3	2	2	3	2	2	3	2	2	3	2	1	3	2	1	3	2	2	3	2	2	3	2	2	3	2	2	3	2	2
49.625	Tallest	30.517 - 36.766	2	3	1	2	3	1	2	3	2	2	3	2	2	3	2	2	3	2	2	3	2	2	3	1	2	3	1	2	3	2	2	3	2	2	3	2	2	3	2	2	3	2	2	3	1	2	3	1	2	3	2	2	3	2	2	3	2	2	3	2	2	3	2
	Standard Cottage	27.517 - 30.516	2	3	1	2	3	1	2	3	2	2	3	2	2	3	2	2	3	2	2	3	2	2	3	1	2	3	1	2	3	2	2	3	2	2	3	2	2	3	2	2	3	2	2	3	1	2	3	1	2	3	2	2	3	2	2	3	2	2	3	2	2	3	2
	Custom Size	24.517 - 27.516	3	3	1	3	3	1	3	3	2	3	3	2	3	3	2	3	3	2	3	3	2	3	3	1	3	3	1	3	3	2	3	3	2	3	3	2	3	3	2	3	3	2	3	3	1	3	3	1	3	3	2	3	3	2	3	3	2	3	3	2	3	3	2
	Equal-lite	21.517 - 24.516	3	2	1	3	2	1	3	2	2	3	2	2	3	2	2	3	2	2	3	3	2	3	2	1	3	2	1	3	2	2	3	2	2	3	2	2	3	2	2	3	2	2	3	2	1	3	2	1	3	2	2	3	2	2	3	2	2	3	2	2	3	2	2
	Standard Proview	18.016 - 21.516	3	2	1	3	2	1	3	2	2	3	2	2	3	2	2	3	2	2	3	2	2	3	2	1	3	2	1	3	2	2	3	2	2	3	2	2	3	2	2	3	2	2	3	2	1	3	2	1	3	2	2	3	2	2	3	2	2	3	2	2	3	2	2
	Custom Size	14.517 - 18.015	3	2	1	3	2	1	3	2	2	3	2	2	3	2	2	3	2	2	3	2	2	3	2	1	3	2	1	3	2	2	3	2	2	3	2	2	3	2	2	3	2	2	3	2	1	3	2	1	3	2	2	3	2	2	3	2	2	3	2	2	3	2	2
	Custom Size	11.517 - 14.516	3	2	1	3	2	1	3	2	2	3	2	2	3	2	2	3	2	2	3	2	2	3	2	1	3	2	1	3	2	2	3	2	2	3	2	2	3	2	2	3	2	2	3	2	1	3	2	1	3	2	2	3	2	2	3	2	2	3	2	2	3	2	2
	Shortest	11.266 - 11.516	3	2	1	3	2	1	3	2	2	3	2	2	3	2	2	3	2	2	3	2	2	3	2	1	3	2	1	3	2	2	3	2	2	3	2	2	3	2	2	3	2	2	3	2	1	3	2	1	3	2	2	3	2	2	3	2	2	3	2	2	3	2	2
62	Tallest	36.517 - 36.767	3	3	1	3	3	1	3	3	2	3	3	2	3	3	2	3	3	2	3	3	2	3	3	1	3	3	1	3	3	2	3	3	2	3	3	2	3	3	2	3	3	2	3	3	1	3	3	1	3	3	2	3	3	2	3	3	2	3	3	2	3	3	2
	Standard Cottage	34.517 - 36.516	3	3	1	3	3	1	3	3	2	3	3	2	3	3	2	3	3	2	3	3	2	3	3	1	3	3	1	3	3	2	3	3	2	3	3	2	3	3	2	3	3	2	3	3	1	3	3	1	3	3	2	3	3	2	3	3	2	3	3	2	3	3	2
	Custom Size	31.517 - 34.516	3	3	1	3	3	1	3	3	2	3	3	2	3	3	2	3	3	2	3	3	2	3	3	1	3	3	1	3	3	2	3	3	2	3	3	2	3	3	2	3	3	2	3	3	1	3	3	1	3	3	2	3	3	2	3	3	2	3	3	2	3	3	2
	Equal-lite	28.517 - 31.516	3	3	1	3	3	1	3	3	2	3	3	2	3	3	2	3	3	2	3	3	2	3	3	1	3	3	1	3	3	2	3	3	2	3	3	2	3	3	2	3	3	2	3	3	1	3	3	1	3	3	2	3	3	2	3	3	2	3	3	2	3	3	2
	Custom Size	25.517 - 28.516	3	3	1	3	3	1	3	3	2	3	3	2	3	3	2	3	3	2	3	3	2	3	3	1	3	3	1	3	3	2	3	3	2	3	3	2	3	3	2	3	3	2	3	3	1	3	3	1	3	3	2	3	3	2	3	3	2	3	3	2	3	3	2
	Standard Proview	22.517 - 25.516	3	3	1	3	3	1	3	3	2	3	3	2	3	3	2	3	3	2	3	3	2	3	3	1	3	3	1	3	3	2	3	3	2	3	3	2	3	3	2	3	3	2	3	3	1	3	3	1	3	3	2	3	3	2	3	3	2	3	3	2	3	3	2
	Custom Size	20.017 - 22.516	4	2	1	4	2	1	4	2	2	4	2	2	4	2	2	4	2	2	4	2	2	4	2	1	4	2	1	4	2	2	4	2	2	4	2	2	4	2	2	4	2	2	4	2	1	4	2	1	4	2	2	4	2	2	4	2	2	4	2	2	4	2	2
	Custom Size	18.016 - 20.016	4	2	1	4	2	1	4	2	2	4	2	2	4	2	2	4	2	2	4	2	2	4	2	1	4	2	1	4	2	2	4	2	2	4	2	2	4	2	2	4	2	2	4	2	1	4	2	1	4	2	2	4	2	2	4	2	2	4	2	2	4	2	2
	Shortest	16.928 - 18.015	4	2	1	4	2	1	4	2	2	4	2	2	4	2	2	4	2	2	4	2	3	4	2	1	4	2	1	4	2	2	4	2	2	4	2	2	4	2	2	4	2	2	4	2	1	4	2	1	4	2	2	4	2	2	4	2	2	4	2	2	4	2	2
75	Tallest	38.517 - 41.266	3	4	1	3	4	1	3	4	2	3	4	2	3	4	2	3	4	2	3	4	2	3	4	1	3	4	1	3	4	2	3	4	2	3	4	2	3	4	2	3	4	2	3	4	1	3	4	1	3	4	2	3	4	2	3	4	2	3	4	2	3	4	2
	Equal-lite	36.517 - 38.516	3	3	1	3	3	1	3	3	2	3	3	2	3	3	2	3	3	2	3	4	2	3	3	1	3	3	1	3	3	2	3	3	2	3	3	2	3	3	2	3	3	2	3	3	1	3	3	1	3	3	2	3	3	2	3	3	2	3	3	2	3	3	2
	Custom Size	34.517 - 36.516	4	3	1	4	3	1	4	3	2	4	3	2	4	3	2	4	3	2	4	3	2	4	3	1	4	3	1	4	3	2	4	3	2	4	3	2	4	3	2	4	3	2	4	3	1	4	3	1	4	3	2	4	3	2	4	3	2	4	3	2	4	3	2
	Custom Size	31.517 - 34.516	4	3	1	4	3	1	4	3	2	4	3	2	4	3	2	4	3	2	4	3	2	4	3	1	4	3	1	4	3	2	4	3	2	4	3	2	4	3	2	4	3	2	4	3	1	4	3	1	4	3	2	4	3	2	4	3	2	4	3	2	4	3	2
	Standard Proview	29.928 - 31.516	4	3	1	4	3	1	4	3	2	4	3	2	4	3	2	4	3	2	4	3	3	4	3	1	4	3	1	4	3	2	4	3	2	4	3	2	4	3	2	4	3	2	4	3	1	4	3	1	4	3	2	4	3	2	4	3	2	4	3	2	4	3	2
84	Equal-lite	40.017 - 41.266	4	4	1	4	4	1	4	4	2	4	4	2	4	4	2	4	4	2	4	4	2	4	4	1	4	4	1	4	4	2	4	4	2	4	4	2	4	4	2	4	4	2	4	4	1	4	4	1	4	4	2	4	4	2	4	4	2	4	4	2	4	4	2
	Custom Size	38.928 - 40.016	4	4	1	4	4	1	4	4	2	4	4	2	4	4	2	4	4	2	4	4	3	4	4	1	4	4	1	4	4	2	4	4	2	4	4	2	4	4	2	4	4	2	4	4	1	4	4	1	4	4	2	4	4	2	4	4	2	4	4	2	4	4	2
86.338	Custom Size	** - 41.266	4	4	1	4	4	1	4	4	2	4	4	2	4	4	2	4	4	2	4	4	3	4	4	1	4	4	1	4	4	2	4	4	2	4	4	2	4	4	2	4	4	2	4	4	1	4	4	1	4	4	2	4	4	2	4	4	2	4	4	2	4	4	2

SEE TABLE 4, SHEET 6 FOR DESIGN PRESSURES WHEN USING THIS TABLE.
** MIN. BOTTOM SASH HEIGHT = WINDOW BUCK HEIGHT - 45.072
(APPLIES TO ANY HEIGHT 86.338" OR LESS).

Max. Anchor O.C. Spacing for "Integral-Fin" Installation	Anchor Group E	Anchor Group F
	3.6"	4"

NOTES:

1) USE THE ABOVE *"ANCHOR QUANTITIES REQUIRED.........."* TABLE FOR ANCHORS INSTALLED THROUGH THE FRAME.

2) USE THE ABOVE *"MAX. ANCHOR O.C. SPACING.........."* TABLE FOR ANCHORS INSTALLED THROUGH THE INTEGRAL FIN.

3) FRAME DIMENSIONS ARE BUCK. "MR"=MEETING RAIL.

4) FOR SIZES NOT SHOWN, ROUND UP TO THE NEXT AVAILABLE WIDTH OR HEIGHT DIMENSION SHOWN ON THE TABLE.

5) REFER TO TABLES 2 & 3, SHEET 2 FOR ANCHOR GROUP DESCRIPTIONS.

PRODUCT REVISED
As complying with the Florida Building Code
NOA-No. 23-0816.18
Expiration Date: 09/17/2025
By: Manuel Perez
Miami-Dade Product Control

Revision:
D) NO CHANGES IN THIS SHEET.

PREPARED BY A. LYNN MILLER
1070 TECHNOLOGY DRIVE
N. VENICE, FL 34275
(941) 480-1600

REGISTRATION #29296

PGT
Custom Windows and Doors
1070 TECHNOLOGY DRIVE
N. VENICE, FL 34275
(941) 480-1600

Date: 05/15/15
Drawn By: A. MORLESIN
Rev.: D
Title: DOUBLE HUNG INSTALL (LM)
Desc.: ANCHOR QUANTITIES TABLE.
DWG No.: MD-DH5560-01
Sheet: 8 OF 14
Series: DH-5560

No. 58705
A Lynn Miller
8/10/23

A. LYNN MILLER, P.E.
P.E.# 58705

TABLE 9:

Anchor Quantities Required for "Through-Frame" Installation			Anchor Group B																					Anchor Group C																					Anchor Group D																				
			18" Wide			24" Wide			32" Wide			36" Wide			40" Wide			48" Wide			52-1/8" Wide			18" Wide			24" Wide			32" Wide			36" Wide			40" Wide			48" Wide			52-1/8" Wide			18" Wide			24" Wide			32" Wide			36" Wide			40" Wide			48" Wide			52-1/8" Wide		
			Jamb			Jamb			Jamb			Jamb			Jamb			Jamb			Jamb			Jamb			Jamb			Jamb			Jamb			Jamb			Jamb			Jamb			Jamb			Jamb			Jamb			Jamb			Jamb			Jamb			Jamb		
Glass Types: 5, 6, 7 & 8 Reinforcement Level: R2 Window Buck Height (in)	Bottom Sash Description for given Range @ Window Height Shown	Bottom Sash Height Range (in)	Above MR	Below MR	Header	Above MR	Below MR	Header	Above MR	Below MR	Header	Above MR	Below MR	Header	Above MR	Below MR	Header	Above MR	Below MR	Header	Above MR	Below MR	Header	Above MR	Below MR	Header	Above MR	Below MR	Header	Above MR	Below MR	Header	Above MR	Below MR	Header	Above MR	Below MR	Header	Above MR	Below MR	Header	Above MR	Below MR	Header	Above MR	Below MR	Header	Above MR	Below MR	Header	Above MR	Below MR	Header	Above MR	Below MR	Header	Above MR	Below MR	Header	Above MR	Below MR	Header	Above MR	Below MR	Header
24	Equal-lite	11.266	1	2	1	1	2	1	1	2	2	1	2	2	1	2	2	1	2	2	1	2	2	1	2	1	1	2	1	1	2	2	1	2	2	1	2	2	1	2	2	1	2	2	1	2	1	1	2	1	1	2	2	1	2	2	1	2	2	1	2	2	1	2	2
28	Standard Cottage	13.517 - 15.516	1	2	1	1	2	1	1	2	2	1	2	2	1	2	2	1	2	2	1	2	2	1	2	1	1	2	1	1	2	2	1	2	2	1	2	2	1	2	2	1	2	2	1	2	1	1	2	1	1	2	2	1	2	2	1	2	2	1	2	2	1	2	2
	Equal-lite	11.517 - 13.516	1	2	1	1	2	1	1	2	2	1	2	2	1	2	2	1	2	2	1	2	2	1	2	1	1	2	1	1	2	2	1	2	2	1	2	2	1	2	2	1	2	2	1	2	1	1	2	1	1	2	2	1	2	2	1	2	2	1	2	2	1	2	2
	Standard Proview	11.266 - 11.516	1	2	1	1	2	1	1	2	2	1	2	2	1	2	2	1	2	2	1	2	2	1	2	1	1	2	1	1	2	2	1	2	2	1	2	2	1	2	2	1	2	2	1	2	1	1	2	1	1	2	2	1	2	2	1	2	2	1	2	2	1	2	2
37.375	Tallest	21.517 - 24.891	1	2	1	1	2	1	1	2	2	1	2	2	1	2	2	1	2	2	1	2	2	1	2	1	1	2	1	1	2	2	1	2	2	1	3	2	1	3	2	1	3	2	1	2	1	1	2	1	1	2	2	1	2	2	1	2	2	1	2	2	1	2	2
	Standard Cottage	18.017 - 21.516	2	2	1	2	2	1	2	2	2	2	2	2	2	2	2	2	2	2	2	2	2	2	2	1	2	2	1	2	2	2	2	2	2	2	2	2	2	2	2	2	2	2	2	2	1	2	2	1	2	2	2	2	2	2	2	2	2	2	2	2	2	2	2
	Equal-lite	15.017 - 18.016	2	2	1	2	2	1	2	2	2	2	2	2	2	2	2	2	2	2	2	2	2	2	2	1	2	2	1	2	2	2	2	2	2	2	2	2	2	2	2	2	2	2	2	2	1	2	2	1	2	2	2	2	2	2	2	2	2	2	2	2	2	2	2
	Standard Proview	11.517 - 15.016	3	2	1	3	2	1	3	2	2	3	2	2	3	2	2	3	2	2	3	2	2	3	2	1	3	2	1	3	2	2	3	2	2	3	2	2	3	2	2	3	2	2	3	2	1	3	2	1	3	2	2	3	2	2	3	2	2	3	2	2	3	2	2
	Shortest	11.266 - 11.516	3	2	1	3	2	1	3	2	2	3	2	2	3	2	2	3	2	2	3	2	2	3	2	1	3	2	1	3	2	2	3	2	2	3	2	2	3	2	2	3	2	2	3	2	1	3	2	1	3	2	2	3	2	2	3	2	2	3	2	2	3	2	2
44	Tallest	29.517 - 31.516	1	3	1	1	3	1	1	3	2	1	3	2	1	3	2	1	3	2	1	3	2	1	3	1	1	3	1	1	3	2	1	3	2	1	3	2	1	3	2	1	3	2	1	3	1	1	3	1	1	3	2	1	3	2	1	3	2	1	3	2	1	3	2
	Custom Size	26.517 - 29.516	2	3	1	2	3	1	2	3	2	2	3	2	2	3	2	2	3	2	2	3	2	2	3	1	2	3	1	2	3	2	2	3	2	2	3	2	2	3	2	2	3	2	2	3	1	2	3	1	2	3	2	2	3	2	2	3	2	2	3	2	2	3	2
	Standard Cottage	23.517 - 26.516	2	3	1	2	3	1	2	3	2	2	3	2	2	3	2	2	3	2	2	3	2	2	3	1	2	3	1	2	3	2	2	3	2	2	3	2	2	3	2	2	3	2	2	3	1	2	3	1	2	3	2	2	3	2	2	3	2	2	3	2	2	3	2
	Equal-lite	20.517 - 23.516	2	2	1	2	2	1	2	2	2	2	2	2	2	2	2	2	2	2	2	2	2	2	2	1	2	2	1	2	2	2	2	2	2	2	2	2	2	2	2	2	3	2	2	2	1	2	2	1	2	2	2	2	2	2	2	2	2	2	2	2	2	2	2
	Custom Size	18.016 - 20.516	3	2	1	3	2	1	3	2	2	3	2	2	3	2	2	3	2	2	3	2	2	3	2	1	3	2	1	3	2	2	3	2	2	3	2	2	3	2	2	3	2	2	3	2	1	3	2	1	3	2	2	3	2	2	3	2	2	3	2	2	3	2	2
	Standard Proview	11.517 - 18.015	3	2	1	3	2	1	3	2	2	3	2	2	3	2	2	3	2	2	3	2	2	3	2	1	3	2	1	3	2	2	3	2	2	3	2	2	3	2	2	3	2	2	3	2	1	3	2	1	3	2	2	3	2	2	3	2	2	3	2	2	3	2	2
	Shortest	11.266 - 11.516	3	2	1	3	2	1	3	2	2	3	2	2	3	2	2	3	2	2	3	2	2	3	2	1	3	2	1	3	2	2	3	2	2	3	2	2	3	2	2	3	2	2	3	2	1	3	2	1	3	2	2	3	2	2	3	2	2	3	2	2	3	2	2
48	Tallest	27.517 - 35.141	2	3	1	2	3	1	2	3	2	2	3	2	2	3	2	2	3	2	2	3	2	2	3	1	2	3	1	2	3	2	2	3	2	2	3	2	2	3	2	2	4	2	2	3	1	2	3	1	2	3	2	2	3	2	2	3	2	2	3	2	2	3	2
	Standard Cottage	23.517 - 27.516	2	3	1	2	3	1	2	3	2	2	3	2	2	3	2	2	3	2	2	3	2	2	3	1	2	3	1	2	3	2	2	3	2	2	3	2	2	3	2	2	3	2	2	3	1	2	3	1	2	3	2	2	3	2	2	3	2	2	3	2	2	3	2
	Equal-lite	20.517 - 23.516	3	2	1	3	2	1	3	2	2	3	2	2	3	2	2	3	2	2	3	2	2	3	2	1	3	2	1	3	2	2	3	2	2	3	2	2	3	2	2	3	3	2	3	2	1	3	2	1	3	2	2	3	2	2	3	2	2	3	2	2	3	2	2
	Standard Proview	18.016 - 20.516	3	2	1	3	2	1	3	2	2	3	2	2	3	2	2	3	2	2	3	2	2	3	2	1	3	2	1	3	2	2	3	2	2	3	2	2	3	2	2	3	2	2	3	2	1	3	2	1	3	2	2	3	2	2	3	2	2	3	2	2	3	2	2
	Custom Size	14.517 - 18.015	3	2	1	3	2	1	3	2	2	3	2	2	3	2	2	3	2	2	3	2	2	3	2	1	3	2	1	3	2	2	3	2	2	3	2	2	3	2	2	3	2	2	3	2	1	3	2	1	3	2	2	3	2	2	3	2	2	3	2	2	3	2	2
	Custom Size	11.517 - 14.516	3	2	1	3	2	1	3	2	2	3	2	2	3	2	2	3	2	2	3	2	2	3	2	1	3	2	1	3	2	2	3	2	2	3	2	2	3	2	2	3	2	2	3	2	1	3	2	1	3	2	2	3	2	2	3	2	2	3	2	2	3	2	2
	Shortest	11.266 - 11.516	3	2	1	3	2	1	3	2	2	3	2	2	3	2	2	3	2	2	3	2	2	3	2	1	3	2	1	3	2	2	3	2	2	3	2	2	3	2	2	3	2	2	3	2	1	3	2	1	3	2	2	3	2	2	3	2	2	3	2	2	3	2	2
49.625	Tallest	30.517 - 36.766	2	3	1	2	3	1	2	3	2	2	3	2	2	3	2	2	3	2	2	3	2	2	3	1	2	3	1	2	3	2	2	3	2	2	3	2	2	3	2	2	4	2	2	3	1	2	3	1	2	3	2	2	3	2	2	3	2	2	3	2	2	3	2
	Standard Cottage	27.517 - 30.516	2	3	1	2	3	1	2	3	2	2	3	2	2	3	2	2	3	2	2	3	2	2	3	1	2	3	1	2	3	2	2	3	2	2	3	2	2	3	2	2	3	2	2	3	1	2	3	1	2	3	2	2	3	2	2	3	2	2	3	2	2	3	2
	Custom Size	24.517 - 27.516	3	3	1	3	3	1	3	3	2	3	3	2	3	3	2	3	3	2	3	3	2	3	3	1	3	3	1	3	3	2	3	3	2	3	3	2	3	3	2	3	3	2	3	3	1	3	3	1	3	3	2	3	3	2	3	3	2	3	3	2	3	3	2
	Equal-lite	21.517 - 24.516	3	2	1	3	2	1	3	2	2	3	2	2	3	2	2	3	2	2	3	2	2	3	2	1	3	2	1	3	2	2	3	2	2	3	2	2	3	2	2	3	3	2	3	2	1	3	2	1	3	2	2	3	2	2	3	2	2	3	2	2	3	2	2
	Standard Proview	18.016 - 21.516	3	2	1	3	2	1	3	2	2	3	2	2	3	2	2	3	2	2	3	2	2	3	2	1	3	2	1	3	2	2	3	2	2	3	2	2	3	2	2	3	2	2	3	2	1	3	2	1	3	2	2	3	2	2	3	2	2	3	2	2	3	2	2
	Custom Size	14.517 - 18.015	3	2	1	3	2	1	3	2	2	3	2	2	3	2	2	3	2	2	3	2	2	3	2	1	3	2	1	3	2	2	3	2	2	3	2	2	3	2	2	3	2	2	3	2	1	3	2	1	3	2	2	3	2	2	3	2	2	3	2	2	3	2	2
	Custom Size	11.517 - 14.516	3	2	1	3	2	1	3	2	2	3	2	2	3	2	2	3	2	2	3	2	2	3	2	1	3	2	1	3	2	2	3	2	2	3	2	2	3	2	2	3	2	3	3	2	1	3	2	1	3	2	2	3	2	2	3	2	2	3	2	2	3	2	2
	Shortest	11.266 - 11.516	3	2	1	3	2	1	3	2	2	3	2	2	3	2	2	3	2	2	3	2	2	3	2	1	3	2	1	3	2	2	3	2	2	3	2	2	3	2	2	3	2	3	3	2	1	3	2	1	3	2	2	3	2	2	3	2	2	3	2	2	3	2	2
62	Tallest	36.517 - 36.767	3	3	1	3	3	1	3	3	2	3	3	2	3	3	2	3	3	2	3	3	2	3	3	1	3	3	1	3	3	2	3	3	2	3	3	2	3	3	2	3	4	2	3	3	1	3	3	1	3	3	2	3	3	2	3	3	2	3	3	2	3	3	2
	Standard Cottage	34.517 - 36.516	3	3	1	3	3	1	3	3	2	3	3	2	3	3	2	3	3	2	3	3	2	3	3	1	3	3	1	3	3	2	3	3	2	3	3	2	3	3	2	3	4	2	3	3	1	3	3	1	3	3	2	3	3	2	3	3	2	3	3	2	3	3	2
	Custom Size	31.517 - 34.516	3	3	1	3	3	1	3	3	2	3	3	2	3	3	2	3	3	2	3	3	2	3	3	1	3	3	1	3	3	2	3	3	2	3	3	2	3	3	2	3	3	2	3	3	1	3	3	1	3	3	2	3	3	2	3	3	2	3	3	2	3	3	2
	Equal-lite	28.517 - 31.516	3	3	1	3	3	1	3	3	2	3	3	2	3	3	2	3	3	2	3	3	2	3	3	1	3	3	1	3	3	2	3	3	2	3	3	2	3	3	2	3	3	2	3	3	1	3	3	1	3	3	2	3	3	2	3	3	2	3	3	2	3	3	2
	Custom Size	25.517 - 28.516	3	3	1	3	3	1	3	3	2	3	3	2	3	3	2	3	3	2	3	3	2	3	3	1	3	3	1	3	3	2	3	3	2	3	3	2	3	3	2	3	3	2	3	3	1	3	3	1	3	3	2	3	3	2	3	3	2	3	3	2	3	3	2
	Standard Proview	22.517 - 25.516	3	3	1	3	3	1	3	3	2	3	3	2	3	3	2	3	3	2	3	3	2	3	3	1	3	3	1	3	3	2	3	3	2	3	3	2	3	3	2	3	3	3	3	3	1	3	3	1	3	3	2	3	3	2	3	3	2	3	3	2	3	3	2
	Custom Size	20.017 - 22.516	4	2	1	4	2	1	4	2	2	4	2	2	4	2	2	4	2	2	4	2	2	4	2	1	4	2	1	4	2	2	4	2	2	4	2	2	4	2	2	4	2	3	4	2	1	4	2	1	4	2	2	4	2	2	4	2	2	4	2	2	4	2	2
	Custom Size	18.016 - 20.016	4	2	1	4	2	1	4	2	2	4	2	2	4	2	2	4	2	2	4	2	2	4	2	1	4	2	1	4	2	2	4	2	2	4	2	2	4	2	2	4	2	3	4	2	1	4	2	1	4	2	2	4	2	2	4	2	2	4	2	2	4	2	2
	Shortest	16.928 - 18.015	4	2	1	4	2	1	4	2	2	4	2	2	4	2	2	4	2	2	4	2	2	4	2	1	4	2	1	4	2	2	4	2	2	4	2	2	4	2	2	4	2	3	4	2	1	4	2	1	4	2	2	4	2	2	4	2	2	4	2	2	4	2	2
75	Tallest	38.517 - 41.266	3	4	1	3	4	1	3	4	2	3	4	2	3	4	2	3	4	2	3	4	2	3	4	1	3	4	1	3	4	2	3	4	2	3	4	2	3	4	2	3	4	2	3	4	1	3	4	1	3	4	2	3	4	2	3	4	2	3	4	2	3	4	2
	Equal-lite	36.517 - 38.516	3	3	1	3	3	1	3	3	2	3	3	2	3	3	2	3	3	2	3	3	2	3	3	1	3	3	1	3	3	2	3	3	2	3	3	2	3	4	2	3	4	3	3	3	1	3	3	1	3	3	2	3	3	2	3	3	2	3	3	2	3	3	2
	Custom Size	34.517 - 36.516	4	3	1	4	3	1	4	3	2	4	3	2	4	3	2	4	3	2	4	3	2	4	3	1	4	3	1	4	3	2	4	3	2	4	3	2	4	3	2	4	4	3	4	3	1	4	3	1	4	3	2	4	3	2	4	3	2	4	3	2	4	3	2
	Custom Size	31.517 - 34.516	4	3	1	4	3	1	4	3	2	4	3	2	4	3	2	4	3	2	4	3	2	4	3	1	4	3	1	4	3	2	4	3	2	4	3	2	4	3	2	4	3	3	4	3	1	4	3	1	4	3	2	4	3	2	4	3	2	4	3	2	4	3	2
	Standard Proview	29.928 - 31.516	4	3	1	4	3	1	4	3	2	4	3	2	4	3	2	4	3	2	4	3	2	4	3	1	4	3	1	4	3	2	4	3	2	4	3	2	4	3	2	4	3	3	4	3	1	4	3	1	4	3	2	4	3	2	4	3	2	4	3	2	4	3	2
84	Equal-lite	40.017 - 41.266	4	4	1	4	4	1	4	4	2	4	4	2	4	4	2	4	4	2	4	4	2	4	4	1	4	4	1	4	4	2	4	4	2	4	4	2	4	4	2	4	4	3	4	4	1	4	4	1	4	4	2	4	4	2	4	4	2	4	4	2	4	4	2
	Custom Size	38.928 - 40.016	4	4	1	4	4	1	4	4	2	4	4	2	4	4	2	4	4	2	4	4	2	4	4	1	4	4	1	4	4	2	4	4	2	4	4	2	4	4	2	4	4	3	4	4	1	4	4	1	4	4	2	4	4	2	4	4	2	4	4	2	4	4	2
86.338	Custom Size	** - 41.266	4	4	1	4	4	1	4	4	2	4	4	2	4	4	2	4	4	2	4	4	2	4	4	1	4	4	1	4	4	2	4	4	2	4	4	2	4	4	2	4	4	3	4	4	1	4	4	1	4	4	2	4	4	2	4	4	2	4	4	2	4	4	2

SEE TABLE 5, SHEET 6 FOR DESIGN PRESSURES WHEN USING THIS TABLE.
** MIN. BOTTOM SASH HEIGHT = WINDOW BUCK HEIGHT - 45.072
(APPLIES TO ANY HEIGHT 86.338" OR LESS).

Max. Anchor O.C. Spacing for "Integral-Fin" Installation	Anchor Group F
	4"

NOTES:

1) USE THE ABOVE *"ANCHOR QUANTITIES REQUIRED.........."* TABLE FOR ANCHORS INSTALLED THROUGH THE FRAME.

2) USE THE ABOVE *"MAX. ANCHOR O.C. SPACING.........."* TABLE FOR ANCHORS INSTALLED THROUGH THE INTEGRAL FIN.

3) FRAME DIMENSIONS ARE BUCK. "MR"=MEETING RAIL.

4) FOR SIZES NOT SHOWN, ROUND UP TO THE NEXT AVAILABLE WIDTH OR HEIGHT DIMENSION SHOWN ON THE TABLE.

5) REFER TO TABLES 2 & 3, SHEET 2 FOR ANCHOR GROUP DESCRIPTIONS.

PRODUCT REVISED
As complying with the Florida Building Code
NOA-No. 23-0816.18
Expiration Date: 09/17/2025
By: Manuel Perez
Miami-Dade Product Control

Revision:
D) NO CHANGES IN THIS SHEET.

PREPARED BY A. LYNN MILLER
1070 TECHNOLOGY DRIVE
N. VENICE, FL 34275
(941) 480-1600

REGISTRATION #29296

PGT
Custom Windows and Doors
1070 TECHNOLOGY DRIVE
N. VENICE, FL 34275
(941) 480-1600

Date: 05/15/15
Drawn By: A. MORLESIN
Title: DOUBLE HUNG INSTALL (LM)
Desc.: ANCHOR QUANTITIES TABLE.
Sheet: 9 OF 14
DWG No.: MD-DH5560-01
Series: DH-5560
Rev.: D

No. 58705
A. Lynn Miller
8/10/23

A. LYNN MILLER, P.E.
P.E.# 58705

TABLE 10:

Anchor Quantities Required for "Through-Frame" Installation			Anchor Group B																							
			18" Wide			24" Wide			32" Wide			36" Wide			40" Wide			48" Wide			52-1/8" Wide			54" Wide		
Glass Types: 9, 10, 11 & 12 Reinforcement Level: R3	Bottom Sash Description for given Range @ Window Height Shown	Bottom Sash Height Range (in)	Jamb		Header	Jamb		Header	Jamb		Header	Jamb		Header	Jamb		Header	Jamb		Header	Jamb		Header	Jamb		Header
Window Buck Height (in)			Above MR	Below MR		Above MR	Below MR		Above MR	Below MR		Above MR	Below MR		Above MR	Below MR		Above MR	Below MR		Above MR	Below MR		Above MR	Below MR	
24	Equal-lite	11.266	1	2	1	1	2	1	1	2	2	1	2	2	1	2	2	1	2	2	1	2	2	1	2	2
28	Standard Cottage	13.517 - 15.516	1	2	1	1	2	1	1	2	2	1	2	2	1	2	2	1	2	2	1	2	2	1	2	2
	Equal-lite	11.517 - 13.516	1	2	1	1	2	1	1	2	2	1	2	2	1	2	2	1	2	2	2	2	2	2	2	2
	Standard Proview	11.266 - 11.516	1	2	1	1	2	1	1	2	2	1	2	2	1	2	2	1	2	2	2	2	2	2	2	2
37.375	Tallest	23.517 - 24.891	1	2	1	1	2	1	1	2	2	1	3	2	1	3	2	1	3	2	1	3	2	1	4	2
	Standard Cottage	20.517 - 23.516	1	2	1	1	2	1	1	2	2	1	2	2	1	3	2	1	3	2	2	3	2	2	3	2
	Equal-lite	18.016 - 20.516	2	2	1	2	2	1	2	2	2	2	2	2	2	2	2	2	3	2	2	3	2	2	3	2
	Standard Proview	11.517 - 18.015	3	2	1	3	2	1	3	2	2	3	2	2	3	2	2	3	3	2	3	3	3	3	3	3
	Shortest	11.266 - 11.516	3	2	1	3	2	1	3	2	2	3	2	2	3	2	2	3	2	2	3	2	3	3	2	3
44	Tallest	29.517 - 31.516	1	3	1	1	3	1	1	3	2	1	3	2	1	3	2	1	4	2	1	4	2	1	4	2
	Custom Size	26.517 - 29.516	2	3	1	2	3	1	2	3	2	2	3	2	2	3	2	2	4	2	2	4	2	2	4	2
	Standard Cottage	23.517 - 26.516	2	3	1	2	3	1	2	3	2	2	3	2	2	3	2	2	3	2	2	4	2	2	4	2
	Equal-lite	20.517 - 23.516	3	2	1	3	2	1	3	2	2	3	2	2	3	3	2	3	3	2	3	3	3	3	3	3
	Standard Proview	18.016 - 20.516	3	2	1	3	2	1	3	2	2	3	2	2	3	2	2	3	3	2	3	3	3	3	3	3
	Custom Size	11.517 - 18.015	3	2	1	3	2	1	3	2	2	3	2	2	3	2	2	3	3	3	3	3	3	3	3	3
	Shortest	11.266 - 11.516	3	2	1	3	2	1	3	2	2	3	2	2	3	2	2	3	2	3	3	2	3	3	2	3
48	Tallest	26.517 - 35.141	2	3	1	2	3	1	2	3	2	2	3	2	2	4	2	2	4	2	2	5	2	2	5	3
	Standard Cottage	23.517 - 26.516	3	3	1	3	3	1	3	3	2	3	3	2	3	3	2	3	3	2	3	4	3	3	4	3
	Equal-lite	20.517 - 23.516	3	2	1	3	2	1	3	2	2	3	2	2	3	3	2	3	3	3	3	3	3	3	3	3
	Standard Proview	18.016 - 20.516	3	2	1	3	2	1	3	2	2	3	2	2	3	2	2	3	3	3	3	3	3	3	3	3
	Custom Size	14.517 - 18.015	3	2	1	3	2	1	3	2	2	3	2	2	3	2	2	3	3	3	3	3	3	3	3	3
	Custom Size	11.517 - 14.516	4	2	1	4	2	1	4	2	2	4	2	2	4	2	2	4	2	3	4	2	3	4	2	3
	Shortest	11.266 - 11.516	4	2	1	4	2	1	4	2	2	4	2	2	4	2	2	4	2	3	4	2	3	4	2	3
49.625	Tallest	30.517 - 36.766	2	3	1	2	3	1	2	3	2	2	4	2	2	4	2	2	5	2	2	5	2	2	5	2
	Standard Cottage	27.517 - 30.516	3	3	1	3	3	1	3	3	2	3	3	2	3	3	2	3	4	2	3	4	2	3	4	3
	Custom Size	24.517 - 27.516	3	3	1	3	3	1	3	3	2	3	3	2	3	3	2	3	4	2	3	4	3	3	4	3
	Equal-lite	21.517 - 24.516	3	2	1	3	2	1	3	2	2	3	3	2	3	3	2	3	3	3	3	3	3	3	4	3
	Standard Proview	18.016 - 21.516	3	2	1	3	2	1	3	2	2	3	2	2	3	2	2	3	3	3	3	3	3	3	3	3
	Custom Size	14.517 - 18.015	4	2	1	4	2	1	4	2	2	4	2	2	4	2	2	4	3	3	4	3	3	4	3	3
	Custom Size	11.517 - 14.516	4	2	1	4	2	1	4	2	2	4	2	2	4	2	2	4	2	3	4	2	3	4	2	3
	Shortest	11.266 - 11.516	4	2	1	4	2	1	4	2	2	4	2	2	4	2	2	4	2	3	4	2	3	4	2	3
62	Standard Cottage	34.517 - 36.767	3	3	1	3	3	1	3	3	2	3	4	2	3	4	2	3	5	3	3	5	3	3	5	3
	Custom Size	32.517 - 34.516	3	3	1	3	3	1	3	3	2	3	3	2	3	4	2	3	4	3	3	5	3	3	5	3
	Equal-lite	29.517 - 32.516	3	3	1	3	3	1	3	3	2	3	3	2	3	3	2	3	4	3	3	4	3	3	5	3
	Custom Size	26.517 - 29.516	4	3	1	4	3	1	4	3	2	4	3	2	4	3	2	4	4	3	4	4	3	4	4	3
	Standard Proview	23.517 - 26.516	4	3	1	4	3	1	4	3	2	4	3	2	4	3	2	4	3	3	4	4	3	4	4	3
	Custom Size	21.016 - 23.516	4	2	1	4	2	1	4	2	2	4	2	2	4	3	2	4	3	3	4	3	3	4	3	4
	Custom Size	18.016 - 21.015	4	2	1	4	2	1	4	2	2	4	2	2	4	2	2	4	3	3	4	3	3	4	3	4
	Custom Size	14.517 - 18.015	5	2	1	5	2	1	5	2	2	5	2	2	5	2	2	5	3	3	5	3	3	5	3	4
	Shortest	11.516 - 14.516	5	2	1	5	2	1	5	2	2	5	2	2	5	2	2	5	2	3	5	2	4	5	2	4
75	Tallest	38.517 - 41.266	4	4	1	4	4	1	4	4	2	4	4	2	4	4	2	4	5	3	4	5	3	4	6	3
	Equal-lite	36.517 - 38.516	4	3	1	4	3	1	4	3	2	4	4	2	4	4	2	4	5	3	4	5	3	4	5	3
	Custom Size	34.517 - 36.516	4	3	1	4	3	1	4	3	2	4	3	2	4	4	2	4	4	3	4	5	3	4	5	4
	Custom Size	32.517 - 34.516	4	3	1	4	3	1	4	3	2	4	3	2	4	4	2	4	4	3	4	5	3	4	5	4
	Custom Size	30.517 - 32.516	4	3	1	4	3	1	4	3	2	4	3	2	4	3	2	4	4	3	4	4	3	4	5	4
	Standard Proview	28.517 - 30.516	5	3	1	5	3	1	5	3	2	5	3	2	5	3	2	5	4	3	5	4	3	5	4	4
	Custom Size	26.517 - 28.516	5	3	1	5	3	1	5	3	2	5	3	2	5	3	2	5	4	3	5	4	3	5	4	4
	Custom Size	24.516 - 26.516	5	3	1	5	3	1	5	3	2	5	3	2	5	3	2	5	3	3	5	4	4	5	4	4
84	Equal-lite	41.266	4	4	1	4	4	1	4	4	2	4	4	2	4	4	2	4	5	3	4	5	3	4	6	4
	Custom Size	38.517 - 41.265	4	4	1	4	4	1	4	4	2	4	4	2	4	4	2	4	5	3	4	5	3	4	6	4
	Custom Size	35.517 - 38.516	5	3	1	5	3	1	5	3	2	5	4	2	5	4	2	5	5	3	5	5	3	5	5	4
	Standard Proview	33.516 - 35.516	5	3	1	5	3	1	5	3	2	5	3	2	5	4	2	5	4	3	5	5	4	5	5	4

Anchor Quantities Required for "Through-Frame" Installation			Anchor Group C																							
			18" Wide			24" Wide			32" Wide			36" Wide			40" Wide			48" Wide			52-1/8" Wide			54" Wide		
Glass Types: 9, 10, 11 & 12 Reinforcement Level: R3	Bottom Sash Description for given Range @ Window Height Shown	Bottom Sash Height Range (in)	Jamb		Header	Jamb		Header	Jamb		Header	Jamb		Header	Jamb		Header	Jamb		Header	Jamb		Header	Jamb		Header
Window Buck Height (in)			Above MR	Below MR		Above MR	Below MR		Above MR	Below MR		Above MR	Below MR		Above MR	Below MR		Above MR	Below MR		Above MR	Below MR		Above MR	Below MR	
24	Equal-lite	11.266	1	2	1	1	2	1	1	2	2	1	2	2	1	2	2	1	2	2	1	2	2	1	2	2
28	Standard Cottage	13.517 - 15.516	1	2	1	1	2	1	1	2	2	1	2	2	1	2	2	1	3	2	1	3	2	1	3	2
	Equal-lite	11.517 - 13.516	1	2	1	1	2	1	1	2	2	1	2	2	1	2	2	2	2	2	2	2	2	2	2	2
	Standard Proview	11.266 - 11.516	1	2	1	1	2	1	1	2	2	1	2	2	1	2	2	2	2	2	2	2	2	2	2	2
37.375	Tallest	23.517 - 24.891	1	2	1	1	2	1	1	3	2	1	3	2	1	3	2	1	4	2	1	4	2	1	4	2
	Standard Cottage	20.517 - 23.516	1	2	1	1	2	1	1	2	2	1	3	2	1	3	2	2	3	2	2	4	2	2	4	2
	Equal-lite	18.016 - 20.516	2	2	1	2	2	1	2	2	2	2	2	2	2	3	2	2	3	2	2	3	3	2	3	3
	Standard Proview	11.517 - 18.015	3	2	1	3	2	1	3	2	2	3	2	2	3	2	2	3	3	3	3	3	3	3	3	3
	Shortest	11.266 - 11.516	3	2	1	3	2	1	3	2	2	3	2	2	3	2	2	3	2	3	3	2	3	3	2	3
44	Tallest	29.517 - 31.516	1	3	1	1	3	1	1	3	2	1	3	2	1	4	2	1	4	2	1	4	2	1	5	2
	Custom Size	26.517 - 29.516	2	3	1	2	3	1	2	3	2	2	3	2	2	4	2	2	4	2	2	5	2	2	5	2
	Standard Cottage	23.517 - 26.516	2	3	1	2	3	1	2	3	2	2	3	2	2	3	2	2	4	2	2	4	3	2	4	3
	Equal-lite	20.517 - 23.516	3	2	1	3	2	1	3	2	2	3	3	2	3	3	2	3	3	3	3	4	3	3	4	3
	Standard Proview	18.016 - 20.516	3	2	1	3	2	1	3	2	2	3	2	2	3	3	2	3	3	3	3	3	3	3	3	3
	Custom Size	11.517 - 18.015	3	2	1	3	2	1	3	2	2	3	2	2	3	2	2	3	3	3	3	3	3	3	3	4
	Shortest	11.266 - 11.516	3	2	1	3	2	1	3	2	2	3	2	2	3	2	2	3	2	3	3	2	3	3	2	4
48	Tallest	26.517 - 35.141	2	3	1	2	3	1	2	3	2	2	4	2	2	4	2	2	5	2	2	5	3	2	5	3
	Standard Cottage	23.517 - 26.516	3	3	1	3	3	1	3	3	2	3	3	2	3	3	2	3	4	3	3	4	3	3	4	3
	Equal-lite	20.517 - 23.516	3	2	1	3	2	1	3	2	2	3	3	2	3	3	2	3	3	3	3	4	3	3	4	3
	Standard Proview	18.016 - 20.516	3	2	1	3	2	1	3	2	2	3	2	2	3	3	2	3	3	3	3	3	3	3	3	3
	Custom Size	14.517 - 18.015	3	2	1	3	2	1	3	2	2	3	2	2	3	2	2	3	3	3	3	3	3	3	3	4
	Custom Size	11.517 - 14.516	4	2	1	4	2	1	4	2	2	4	2	2	4	2	3	4	2	3	4	3	4	4	3	4
	Shortest	11.266 - 11.516	4	2	1	4	2	1	4	2	2	4	2	2	4	2	3	4	2	3	4	2	4	4	2	4
49.625	Tallest	30.517 - 36.766	2	3	1	2	3	1	2	4	2	2	4	2	2	4	2	2	5	2	2	5	2	2	6	3
	Standard Cottage	27.517 - 30.516	3	3	1	3	3	1	3	3	2	3	3	2	3	4	2	3	4	3	3	5	3	3	5	3
	Custom Size	24.517 - 27.516	3	3	1	3	3	1	3	3	2	3	3	2	3	3	2	3	4	3	3	4	3	3	4	3
	Equal-lite	21.517 - 24.516	3	2	1	3	2	1	3	3	2	3	3	2	3	3	2	3	4	3	3	4	3	3	4	3
	Standard Proview	18.016 - 21.516	3	2	1	3	2	1	3	2	2	3	3	2	3	3	2	3	3	3	3	3	3	3	3	3
	Custom Size	14.517 - 18.015	4	2	1	4	2	1	4	2	2	4	2	2	4	2	2	4	3	3	4	3	4	4	3	4
	Custom Size	11.517 - 14.516	4	2	1	4	2	1	4	2	2	4	2	2	4	2	3	4	2	3	4	3	4	4	3	4
	Shortest	11.266 - 11.516	4	2	1	4	2	1	4	2	2	4	2	2	4	2	3	4	2	3	4	2	4	4	2	4
62	Standard Cottage	34.517 - 36.767	3	3	1	3	3	1	3	4	2	3	4	2	3	4	2	3	5	3	3	5	3	3	6	3
	Custom Size	32.517 - 34.516	3	3	1	3	3	1	3	3	2	3	4	2	3	4	2	3	5	3	3	5	3	3	5	3
	Equal-lite	29.517 - 32.516	3	3	1	3	3	1	3	3	2	3	4	2	3	4	2	3	5	3	3	5	3	3	5	4
	Custom Size	26.517 - 29.516	4	3	1	4	3	1	4	3	2	4	3	2	4	4	2	4	4	3	4	5	4	4	5	4
	Standard Proview	23.517 - 26.516	4	3	1	4	3	1	4	3	2	4	3	2	4	3	3	4	4	3	4	4	4	4	4	4
	Custom Size	21.016 - 23.516	4	2	1	4	2	1	4	2	2	4	3	2	4	3	3	4	3	3	4	4	4	4	4	4
	Custom Size	18.016 - 21.015	4	2	1	4	2	1	4	2	2	4	3	2	4	3	3	4	3	3	5	3	4	5	3	4
	Custom Size	14.517 - 18.015	5	2	1	5	2	1	5	2	2	5	2	2	5	2	3	5	3	3	5	3	4	5	3	4
	Shortest	11.516 - 14.516	5	2	1	5	2	1	5	2	2	5	2	2	5	2	3	5	2	3	5	3	4	5	3	4
75	Tallest	38.517 - 41.266	4	4	1	4	4	1	4	4	2	4	4	2	4	5	3	4	6	3	4	6	4	4	6	4
	Equal-lite	36.517 - 38.516	4	3	1	4	3	1	4	4	2	4	4	2	4	5	3	4	5	3	4	6	4	4	6	4
	Custom Size	34.517 - 36.516	4	3	1	4	3	1	4	4	2	4	4	2	4	4	3	4	5	3	4	5	4	4	6	4
	Custom Size	32.517 - 34.516	4	3	1	4	3	1	4	3	2	4	4	2	4	4	3	4	5	3	4	5	4	4	5	4
	Custom Size	30.517 - 32.516	4	3	1	4	3	1	4	3	2	4	4	2	4	4	3	4	5	3	5	5	4	5	5	4
	Standard Proview	28.517 - 30.516	5	3	1	5	3	1	5	3	2	5	3	2	5	4	3	5	4	3	5	5	4	5	5	4
	Custom Size	26.517 - 28.516	5	3	1	5	3	1	5	3	2	5	3	2	5	3	3	5	4	3	5	4	4	5	5	4
	Custom Size	24.516 - 26.516	5	3	1	5	3	1	5	3	2	5	3	2	5	3	3	5	4	3	5	4	4	5	4	4
84	Equal-lite	41.266	4	4	1	4	4	1	4	4	2	4	4	2	4	5	3	4	6	3	4	6	4	4	6	4
	Custom Size	38.517 - 41.265	4	4	1	4	4	1	4	4	2	4	4	2	4	5	3	4	6	3	5	6	4	5	6	4
	Custom Size	35.517 - 38.516	5	3	1	5	3	1	5	4	2	5	4	2	5	5	3	5	5	3	5	6	4	5	6	4
	Standard Proview	33.516 - 35.516	5	3	1	5	3	1	5	3	2	5	4	2	5	4	3	5	5	3	5	5	4	5	6	4

Anchor Quantities Required for "Through-Frame" Installation			Anchor Group D																							
			18" Wide			24" Wide			32" Wide			36" Wide			40" Wide			48" Wide			52-1/8" Wide			54" Wide		
Glass Types: 9, 10, 11 & 12 Reinforcement Level: R3	Bottom Sash Description for given Range @ Window Height Shown	Bottom Sash Height Range (in)	Jamb		Header	Jamb		Header	Jamb		Header	Jamb		Header	Jamb		Header	Jamb		Header	Jamb		Header	Jamb		Header
Window Buck Height (in)			Above MR	Below MR		Above MR	Below MR		Above MR	Below MR		Above MR	Below MR		Above MR	Below MR		Above MR	Below MR		Above MR	Below MR		Above MR	Below MR	
24	Equal-lite	11.266	1	2	1	1	2	1	1	2	2	1	2	2	1	2	2	1	2	2	1	2	2	1	2	2
28	Standard Cottage	13.517 - 15.516	1	2	1	1	2	1	1	2	2	1	2	2	1	2	2	1	2	2	1	2	2	1	2	2
	Equal-lite	11.517 - 13.516	1	2	1	1	2	1	1	2	2	1	2	2	1	2	2	1	2	2	1	2	2	1	2	2
	Standard Proview	11.266 - 11.516	1	2	1	1	2	1	1	2	2	1	2	2	1	2	2	1	2	2	1	2	2	1	2	2
37.375	Tallest	23.517 - 24.891	1	2	1	1	2	1	1	2	2	1	2	2	1	2	2	1	3	2	1	3	2	1	3	2
	Standard Cottage	20.517 - 23.516	1	2	1	1	2	1	1	2	2	1	2	2	1	2	2	1	3	2	1	3	2	1	3	2
	Equal-lite	18.016 - 20.516	2	2	1	2	2	1	2	2	2	2	2	2	2	2	2	2	2	2	2	3	2	2	3	2
	Standard Proview	11.517 - 18.015	3	2	1	3	2	1	3	2	2	3	2	2	3	2	2	3	2	2	3	2	2	3	2	2
	Shortest	11.266 - 11.516	3	2	1	3	2	1	3	2	2	3	2	2	3	2	2	3	2	2	3	2	2	3	2	2
44	Tallest	29.517 - 31.516	1	3	1	1	3	1	1	3	2	1	3	2	1	3	2	1	3	2	1	3	2	1	3	2
	Custom Size	26.517 - 29.516	2	3	1	2	3	1	2	3	2	2	3	2	2	3	2	2	3	2	2	3	2	2	3	2
	Standard Cottage	23.517 - 26.516	2	3	1	2	3	1	2	3	2	2	3	2	2	3	2	2	3	2	2	3	2	2	3	2
	Equal-lite	20.517 - 23.516	3	2	1	3	2	1	3	2	2	3	2	2	3	2	2	3	3	2	3	3	2	3	3	2
	Standard Proview	18.016 - 20.516	3	2	1	3	2	1	3	2	2	3	2	2	3	2	2	3	2	2	3	3	2	3	3	2
	Custom Size	11.517 - 18.015	3	2	1	3	2	1	3	2	2	3	2	2	3	2	2	3	2	2	3	2	3	3	2	3
	Shortest	11.266 - 11.516	3	2	1	3	2	1	3	2	2	3	2	2	3	2	2	3	2	2	3	2	3	3	2	3
48	Tallest	26.517 - 35.141	2	3	1	2	3	1	2	3	2	2	3	2	2	3	2	2	4	2	2	4	2	2	4	2
	Standard Cottage	23.517 - 26.516	3	3	1	3	3	1	3	3	2	3	3	2	3	3	2	3	3	2	3	3	2	3	3	2
	Equal-lite	20.517 - 23.516	3	2	1	3	2	1	3	2	2	3	2	2	3	2	2	3	3	2	3	3	2	3	3	2
	Standard Proview	18.016 - 20.516	3	2	1	3	2	1	3	2	2	3	2	2	3	2	2	3	2	2	3	3	2	3	3	3
	Custom Size	14.517 - 18.015	3	2	1	3	2	1	3	2	2	3	2	2	3	2	2	3	2	2	3	2	3	3	2	3
	Custom Size	11.517 - 14.516	4	2	1	4	2	1	4	2	2	4	2	2	4	2	2	4	2	2	4	2	3	4	2	3
	Shortest	11.266 - 11.516	4	2	1	4	2	1	4	2	2	4	2	2	4	2	2	4	2	2	4	2	3	4	2	3
49.625	Tallest	30.517 - 36.766	2	3	1	2	3	1	2	3	2	2	3	2	2	3	2	2	4	2	2	4	2	2	4	2
	Standard Cottage	27.517 - 30.516	3	3	1	3	3	1	3	3	2	3	3	2	3	3	2	3	3	2	3	3	2	3	4	2
	Custom Size	24.517 - 27.516	3	3	1	3	3	1	3	3	2	3	3	2	3	3	2	3	3	2	3	3	2	3	3	2
	Equal-lite	21.517 - 24.516	3	2	1	3	2	1	3	2	2	3	2	2	3	2	2	3	3	2	3	3	2	3	3	2
	Standard Proview	18.016 - 21.516	3	2	1	3	2	1	3	2	2	3	2	2	3	2	2	3	2	2	3	3	3	3	3	3
	Custom Size	14.517 - 18.015	4	2	1	4	2	1	4	2	2	4	2	2	4	2	2	4	2	2	4	2	3	4	2	3
	Custom Size	11.517 - 14.516	4	2	1	4	2	1	4	2	2	4	2	2	4	2	2	4	2	2	4	2	3	4	2	3
	Shortest	11.266 - 11.516	4	2	1	4	2	1	4	2	2	4	2	2	4	2	2	4	2	2	4	2	3	4	2	3
62	Standard Cottage	34.517 - 36.767	3	3	1	3	3	1	3	3	2	3	3	2	3	3	2	3	4	2	3	4	2	3	4	2
	Custom Size	32.517 - 34.516	3	3	1	3	3	1	3	3	2	3	3	2	3	3	2	3	4	2	3	4	2	3	4	3
	Equal-lite	29.517 - 32.516	3	3	1	3	3	1	3	3	2	3	3	2	3	3	2	3	3	2	3	4	3	3	4	3
	Custom Size	26.517 - 29.516	4	3	1	4	3	1	4	3	2	4	3	2	4	3	2	4	3	2	4	3	3	4	3	3
	Standard Proview	23.517 - 26.516	4	3	1	4	3	1	4	3	2	4	3	2	4	3	2	4	3	2	4	3	3	4	3	3
	Custom Size	21.016 - 23.516	4	2	1	4	2	1	4	2	2	4	2	2	4	2	2	4	3	3	4	3	3	4	3	3
	Custom Size	18.016 - 21.015	4	2	1	4	2	1	4	2	2	4	2	2	4	2	2	4	2	3	4	3	3	4	3	3
	Custom Size	14.517 - 18.015	5	2	1	5	2	1	5	2	2	5	2	2	5	2	2	5	2	3	5	2	3	5	2	3
	Shortest	11.516 - 14.516	5	2	1	5	2	1	5	2	2	5	2	2	5	2	2	5	2	3	5	2	3	5	2	3
75	Tallest	38.517 - 41.266	4	4	1	4	4	1	4	4	2	4	4	2	4	4	2	4	4	2	4	4	3	4	5	3
	Equal-lite	36.517 - 38.516	4	3	1	4	3	1	4	3	2	4	3	2	4	3	2	4	4	2	4	4	3	4	4	3
	Custom Size	34.517 - 36.516	4	3	1	4	3	1	4	3	2	4	3	2	4	3	2	4	4	3	4	4	3	4	4	3
	Custom Size	32.517 - 34.516	4	3	1	4	3	1	4	3	2	4	3	2	4	3	2	4	4	3	4	4	3	4	4	3
	Custom Size	30.517 - 32.516	4	3	1	4	3	1	4	3	2	4	3	2	4	3	2	4	3	3	4	4	3	4	4	3
	Standard Proview	28.517 - 30.516	5	3	1	5	3	1	5	3	2	5	3	2	5	3	2	5	3	3	5	3	3	5	4	3
	Custom Size	26.517 - 28.516	5	3	1	5	3	1	5	3	2	5	3	2	5	3	2	5	3	3	5	3	3	5	3	3
	Custom Size	24.516 - 26.516	5	3	1	5	3	1	5	3	2	5	3	2	5	3	2	5	3	3	5	3	3	5	3	3
84	Equal-lite	41.266	4	4	1	4	4	1	4	4	2	4	4	2	4	4	2	4	4	3	4	4	3	4	5	3
	Custom Size	38.517 - 41.265	4	4	1	4	4	1	4	4	2	4	4	2	4	4	2	4	4	3	4	4	3	4	5	3
	Custom Size	35.517 - 38.516	5	3	1	5	3	1	5	3	2	5	3	2	5	3	2	5	4	3	5	4	3	5	4	3
	Standard Proview	33.516 - 35.516	5	3	1	5	3	1	5	3	2	5	3	2	5	3	2	5	4	3	5	4	3	5	4	3

SEE TABLE 6, SHEET 7 FOR DESIGN PRESSURES WHEN USING THIS TABLE.
MIN. BOTTOM SASH HEIGHT = WINDOW BUCK HEIGHT - 50.484
(APPLIES TO ANY HEIGHT 84" OR LESS).

! GLASS TYPES 9 THROUGH 16 MAY NOT BE USED WITH J-CHANNEL OR INTEGRAL FIN FRAMES

NOTES:

1) FRAME DIMENSIONS ARE BUCK. "MR"=MEETING RAIL.

2) FOR SIZES NOT SHOWN, ROUND UP TO THE NEXT AVAILABLE WIDTH OR HEIGHT DIMENSION SHOWN ON THE TABLE.

3) REFER TO TABLE 2, SHEET 2 FOR ANCHOR GROUP DESCRIPTIONS.

PRODUCT REVISED
As complying with the Florida Building Code
NOA-No. 23-0816.18
Expiration Date: 09/17/2025
By: Manuel Perez
Miami-Dade Product Control

Revision: D) NO CHANGES IN THIS SHEET.

PREPARED BY A. LYNN MILLER
1070 TECHNOLOGY DRIVE
N. VENICE, FL 34275
(941) 480-1600

REGISTRATION #29296

PGT
Custom Windows and Doors
1070 TECHNOLOGY DRIVE
N. VENICE, FL 34275
(941) 480-1600

Date	05/15/15
Drawn By	A. MORLESIN
DWG No.	MD-DH5560-01
Rev.	D
Title	DOUBLE HUNG INSTALL (LM)
Desc.	ANCHOR QUANTITIES TABLE
Sheet	10 OF 14
Series	DH-5560

No. 58705
A Lynn Miller
8/10/23

A. LYNN MILLER, P.E.
P.E.# 58705

TABLE 11:

Anchor Quantities Required for "Through-Frame" Installation			Anchor Group B																							
			18" Wide			24" Wide			32" Wide			36" Wide			40" Wide			48" Wide			52-1/8" Wide			54" Wide		
			Jamb			Jamb			Jamb			Jamb			Jamb			Jamb			Jamb			Jamb		
Glass Types: 13, 14, 15 & 16 Reinforcement Level: R3 Window Buck Height (in)	Bottom Sash Description for given Range @ Window Height Shown	Bottom Sash Height Range (in)	Above MR	Below MR	Header	Above MR	Below MR	Header	Above MR	Below MR	Header	Above MR	Below MR	Header	Above MR	Below MR	Header	Above MR	Below MR	Header	Above MR	Below MR	Header	Above MR	Below MR	Header
24	Equal-lite	11.266	1	2	1	1	2	1	1	2	2	1	2	2	1	2	2	1	2	2	1	2	2	1	2	2
28	Standard Cottage	13.517 - 15.516	1	2	1	1	2	1	1	2	2	1	2	2	1	2	2	1	2	2	1	2	2	1	2	2
	Equal-lite	11.517 - 13.516	1	2	1	1	2	1	1	2	2	1	2	2	1	2	2	1	2	2	2	2	2	2	2	2
	Standard Proview	11.266 - 11.516	1	2	1	1	2	1	1	2	2	1	2	2	1	2	2	1	2	2	2	2	2	2	2	2
37.375	Tallest	23.517 - 24.891	1	2	1	1	2	1	1	2	2	1	3	2	1	3	2	1	3	2	1	3	2	1	4	2
	Standard Cottage	20.517 - 23.516	1	2	1	1	2	1	1	2	2	1	2	2	1	3	2	1	3	2	2	3	2	2	3	2
	Equal-lite	18.016 - 20.516	2	2	1	2	2	1	2	2	2	2	2	2	2	2	2	2	3	2	2	3	2	2	3	2
	Standard Proview	11.517 - 18.015	3	2	1	3	2	1	3	2	2	3	2	2	3	2	2	3	3	2	3	3	3	3	3	3
	Shortest	11.266 - 11.516	3	2	1	3	2	1	3	2	2	3	2	2	3	2	2	3	2	2	3	2	3	3	2	3
44	Tallest	29.517 - 31.516	1	3	1	1	3	1	1	3	2	1	3	2	1	3	2	1	4	2	1	4	2	1	4	2
	Custom Size	26.517 - 29.516	2	3	1	2	3	1	2	3	2	2	3	2	2	3	2	2	4	2	2	4	2	2	4	2
	Standard Cottage	23.517 - 26.516	2	3	1	2	3	1	2	3	2	2	3	2	2	3	2	2	3	2	2	4	2	2	4	2
	Equal-lite	20.517 - 23.516	3	2	1	3	2	1	3	2	2	3	2	2	3	3	2	3	3	2	3	3	3	3	3	3
	Standard Proview	18.016 - 20.516	3	2	1	3	2	1	3	2	2	3	2	2	3	2	2	3	3	2	3	3	3	3	3	3
	Custom Size	11.517 - 18.015	3	2	1	3	2	1	3	2	2	3	2	2	3	2	2	3	3	3	3	3	3	3	3	3
	Shortest	11.266 - 11.516	3	2	1	3	2	1	3	2	2	3	2	2	3	2	2	3	2	3	3	2	3	3	2	3
48	Tallest	26.517 - 35.141	2	3	1	2	3	1	2	3	2	2	3	2	2	4	2	2	4	2	2	5	2	2	5	3
	Standard Cottage	23.517 - 26.516	3	3	1	3	3	1	3	3	2	3	3	2	3	3	2	3	3	2	3	4	3	3	4	3
	Equal-lite	20.517 - 23.516	3	2	1	3	2	1	3	2	2	3	2	2	3	3	2	3	3	3	3	3	3	3	3	3
	Standard Proview	18.016 - 20.516	3	2	1	3	2	1	3	2	2	3	2	2	3	2	2	3	3	3	3	3	3	3	3	3
	Custom Size	14.517 - 18.015	3	2	1	3	2	1	3	2	2	3	2	2	3	2	2	3	3	3	3	3	3	3	3	3
	Custom Size	11.517 - 14.516	4	2	1	4	2	1	4	2	2	4	2	2	4	2	2	4	2	3	4	2	3	4	2	3
	Shortest	11.266 - 11.516	4	2	1	4	2	1	4	2	2	4	2	2	4	2	2	4	2	3	4	2	3	4	2	3
49.625	Tallest	30.517 - 36.766	2	3	1	2	3	1	2	3	2	2	4	2	2	4	2	2	5	2	2	5	2	2	5	2
	Standard Cottage	27.517 - 30.516	3	3	1	3	3	1	3	3	2	3	3	2	3	3	2	3	4	2	3	4	2	3	4	3
	Custom Size	24.517 - 27.516	3	3	1	3	3	1	3	3	2	3	3	2	3	3	2	3	4	2	3	4	3	3	4	3
	Equal-lite	21.517 - 24.516	3	2	1	3	2	1	3	2	2	3	3	2	3	3	2	3	3	3	3	3	3	3	4	3
	Standard Proview	18.016 - 21.516	3	2	1	3	2	1	3	2	2	3	2	2	3	2	2	3	3	3	3	3	3	3	3	3
	Custom Size	14.517 - 18.015	4	2	1	4	2	1	4	2	2	4	2	2	4	2	2	4	3	3	4	3	3	4	3	3
	Custom Size	11.517 - 14.516	4	2	1	4	2	1	4	2	2	4	2	2	4	2	2	4	2	3	4	2	3	4	2	3
	Shortest	11.266 - 11.516	4	2	1	4	2	1	4	2	2	4	2	2	4	2	2	4	2	3	4	2	3	4	2	3
62	Standard Cottage	34.517 - 36.767	3	3	1	3	3	1	3	3	2	3	4	2	3	4	2	3	5	3	3	5	3	3	5	3
	Custom Size	32.517 - 34.516	3	3	1	3	3	1	3	3	2	3	3	2	3	4	2	3	4	3	3	5	3	3	4	3
	Equal-lite	29.517 - 32.516	3	3	1	3	3	1	3	3	2	3	3	2	3	3	2	3	4	3	3	4	3	3	4	3
	Custom Size	26.517 - 29.516	4	3	1	4	3	1	4	3	2	4	3	2	4	3	2	4	4	3	4	4	3	4	4	3
	Standard Proview	23.517 - 26.516	4	3	1	4	3	1	4	3	2	4	3	2	4	3	2	4	3	3	4	4	3	4	4	3
	Custom Size	21.016 - 23.516	4	2	1	4	2	1	4	2	2	4	2	2	4	2	2	4	3	3	4	3	3	4	3	3
	Custom Size	18.016 - 21.015	4	2	1	4	2	1	4	2	2	4	2	2	4	2	2	4	3	3	4	3	3	4	3	3
	Custom Size	14.517 - 18.015	5	2	1	5	2	1	5	2	2	5	2	2	5	2	2	5	2	3	5	2	3	5	2	3
	Shortest	11.516 - 14.516	5	2	1	5	2	1	5	2	2	5	2	2	5	2	2	5	2	2	5	2	3	5	2	3
75	Tallest	38.517 - 41.266	4	4	1	4	4	1	4	4	2	4	4	2	4	4	2	4	4	2	4	4	3	4	5	3
	Equal-lite	36.517 - 38.516	4	3	1	4	3	1	4	3	2	4	3	2	4	4	2	4	4	3	4	5	3	4	5	3
	Custom Size	34.517 - 36.516	4	3	1	4	3	1	4	3	2	4	3	2	4	4	2	4	4	3	4	4	3	4	4	3
	Custom Size	32.517 - 34.516	4	3	1	4	3	1	4	3	2	4	3	2	4	3	2	4	4	3	4	4	3	4	4	3
	Custom Size	30.517 - 32.516	4	3	1	4	3	1	4	3	2	4	3	2	4	3	2	4	4	3	4	4	3	4	3	3
	Standard Proview	28.517 - 30.516	5	3	1	5	3	1	5	3	2	5	3	2	5	3	2	5	3	3	5	3	3	5	3	3
	Custom Size	26.517 - 28.516	5	3	1	5	3	1	5	3	2	5	3	2	5	3	2	5	3	3	5	3	3	5	3	3
	Custom Size	24.516 - 26.516	5	3	1	5	3	1	5	3	2	5	3	2	5	3	2	5	3	2	5	3	3	5	3	3
84	Equal-lite	41.266	4	4	1	4	4	1	4	4	2	4	4	2	4	4	2	4	4	3	4	4	3	4	5	3
	Custom Size	38.517 - 41.265	5	4	1	5	4	1	5	4	2	5	4	2	5	4	2	5	4	3	5	4	3	5	4	3
	Custom Size	35.517 - 38.516	5	3	1	5	3	1	5	3	2	5	3	2	5	3	2	5	3	2	5	4	3	5	4	3
	Standard Proview	33.516 - 35.516	5	3	1	5	3	1	5	3	2	5	3	2	5	3	2	5	3	2	5	3	3	5	4	3

Anchor Quantities Required for "Through-Frame" Installation			Anchor Group C																							
			18" Wide			24" Wide			32" Wide			36" Wide			40" Wide			48" Wide			52-1/8" Wide			54" Wide		
			Jamb			Jamb			Jamb			Jamb			Jamb			Jamb			Jamb			Jamb		
Glass Types: 13, 14, 15 & 16 Reinforcement Level: R3 Window Buck Height (in)	Bottom Sash Description for given Range @ Window Height Shown	Bottom Sash Height Range (in)	Above MR	Below MR	Header	Above MR	Below MR	Header	Above MR	Below MR	Header	Above MR	Below MR	Header	Above MR	Below MR	Header	Above MR	Below MR	Header	Above MR	Below MR	Header	Above MR	Below MR	Header
24	Equal-lite	11.266	1	2	1	1	2	1	1	2	2	1	2	2	1	2	2	1	2	2	1	2	2	1	2	2
28	Standard Cottage	13.517 - 15.516	1	2	1	1	2	1	1	2	2	1	2	2	1	2	2	1	3	2	1	3	2	1	3	2
	Equal-lite	11.517 - 13.516	1	2	1	1	2	1	1	2	2	1	2	2	1	2	2	2	2	2	2	2	2	2	2	2
	Standard Proview	11.266 - 11.516	1	2	1	1	2	1	1	2	2	1	2	2	1	2	2	2	2	2	2	2	2	2	2	2
37.375	Tallest	23.517 - 24.891	1	2	1	1	2	1	1	3	2	1	3	2	1	3	2	1	4	2	1	4	2	1	4	2
	Standard Cottage	20.517 - 23.516	1	2	1	1	2	1	1	2	2	1	3	2	1	3	2	2	3	2	2	4	2	2	4	2
	Equal-lite	18.016 - 20.516	2	2	1	2	2	1	2	2	2	2	2	2	2	3	2	2	3	2	2	3	3	2	3	3
	Standard Proview	11.517 - 18.015	3	2	1	3	2	1	3	2	2	3	2	2	3	2	2	3	3	3	3	3	3	3	3	3
	Shortest	11.266 - 11.516	3	2	1	3	2	1	3	2	2	3	2	2	3	2	2	3	2	3	3	2	3	3	2	3
44	Tallest	29.517 - 31.516	1	3	1	1	3	1	1	3	2	1	3	2	1	4	2	1	4	2	1	4	2	1	5	2
	Custom Size	26.517 - 29.516	2	3	1	2	3	1	2	3	2	2	3	2	2	4	2	2	4	2	2	5	2	2	5	2
	Standard Cottage	23.517 - 26.516	2	3	1	2	3	1	2	3	2	2	3	2	2	3	2	2	4	2	2	4	3	2	4	3
	Equal-lite	20.517 - 23.516	3	2	1	3	2	1	3	2	2	3	3	2	3	3	2	3	3	3	3	4	3	3	4	3
	Standard Proview	18.016 - 20.516	3	2	1	3	2	1	3	2	2	3	2	2	3	3	2	3	3	3	3	3	3	3	3	3
	Custom Size	11.517 - 18.015	3	2	1	3	2	1	3	2	2	3	2	2	3	2	2	3	3	3	3	3	3	3	3	4
	Shortest	11.266 - 11.516	3	2	1	3	2	1	3	2	2	3	2	2	3	2	2	3	2	3	3	2	3	3	2	4
48	Tallest	26.517 - 35.141	2	3	1	2	3	1	2	3	2	2	4	2	2	4	2	2	5	2	2	5	3	2	5	3
	Standard Cottage	23.517 - 26.516	3	3	1	3	3	1	3	3	2	3	3	2	3	3	2	3	4	3	3	4	3	3	4	3
	Equal-lite	20.517 - 23.516	3	2	1	3	2	1	3	2	2	3	3	2	3	3	2	3	3	3	3	4	3	3	4	3
	Standard Proview	18.016 - 20.516	3	2	1	3	2	1	3	2	2	3	2	2	3	3	2	3	3	3	3	3	3	3	3	3
	Custom Size	14.517 - 18.015	3	2	1	3	2	1	3	2	2	3	2	2	3	2	2	3	3	3	3	3	3	3	3	4
	Custom Size	11.517 - 14.516	4	2	1	4	2	1	4	2	2	4	2	2	4	2	3	4	2	3	4	3	4	4	3	4
	Shortest	11.266 - 11.516	4	2	1	4	2	1	4	2	2	4	2	2	4	2	3	4	2	3	4	2	4	4	2	4
49.625	Tallest	30.517 - 36.766	2	3	1	2	3	1	2	4	2	2	4	2	2	4	2	2	5	2	2	5	2	2	6	3
	Standard Cottage	27.517 - 30.516	3	3	1	3	3	1	3	3	2	3	3	2	3	4	2	3	4	3	3	5	3	3	5	3
	Custom Size	24.517 - 27.516	3	3	1	3	3	1	3	3	2	3	3	2	3	3	2	3	4	3	3	4	3	3	4	3
	Equal-lite	21.517 - 24.516	3	2	1	3	2	1	3	3	2	3	3	2	3	3	2	3	4	3	3	4	3	3	4	3
	Standard Proview	18.016 - 21.516	3	2	1	3	2	1	3	2	2	3	3	2	3	3	2	3	3	3	3	3	3	3	3	3
	Custom Size	14.517 - 18.015	4	2	1	4	2	1	4	2	2	4	2	2	4	2	2	4	3	3	4	3	4	4	3	4
	Custom Size	11.517 - 14.516	4	2	1	4	2	1	4	2	2	4	2	2	4	2	3	4	2	3	4	3	4	4	3	4
	Shortest	11.266 - 11.516	4	2	1	4	2	1	4	2	2	4	2	2	4	2	3	4	2	3	4	2	4	4	2	4
62	Standard Cottage	34.517 - 36.767	3	3	1	3	3	1	3	4	2	3	4	2	3	4	2	3	5	3	3	5	3	3	5	3
	Custom Size	32.517 - 34.516	3	3	1	3	3	1	3	3	2	3	4	2	3	4	2	3	5	3	3	5	3	3	5	3
	Equal-lite	29.517 - 32.516	3	3	1	3	3	1	3	3	2	3	4	2	3	4	2	3	5	3	3	5	3	3	5	3
	Custom Size	26.517 - 29.516	4	3	1	4	3	1	4	3	2	4	3	2	4	4	2	4	4	3	4	4	3	4	4	3
	Standard Proview	23.517 - 26.516	4	3	1	4	3	1	4	3	2	4	3	2	4	3	3	4	4	3	4	4	4	4	4	4
	Custom Size	21.016 - 23.516	4	2	1	4	2	1	4	2	2	4	3	2	4	3	2	4	3	3	4	3	3	4	4	4
	Custom Size	18.016 - 21.015	4	2	1	4	2	1	4	2	2	4	2	2	4	3	2	4	3	3	4	3	3	4	3	4
	Custom Size	14.517 - 18.015	5	2	1	5	2	1	5	2	2	5	2	2	5	2	2	5	2	3	5	3	3	5	3	4
	Shortest	11.516 - 14.516	5	2	1	5	2	1	5	2	2	5	2	2	5	2	2	5	2	3	5	2	3	5	2	3
75	Tallest	38.517 - 41.266	4	4	1	4	4	1	4	4	2	4	4	2	4	4	2	4	5	3	4	5	3	4	5	3
	Equal-lite	36.517 - 38.516	4	3	1	4	3	1	4	4	2	4	4	2	4	4	2	4	5	3	4	5	3	4	5	3
	Custom Size	34.517 - 36.516	4	3	1	4	3	1	4	3	2	4	4	2	4	4	2	4	5	3	4	5	3	4	5	3
	Custom Size	32.517 - 34.516	4	3	1	4	3	1	4	3	2	4	3	2	4	4	2	4	4	3	4	4	3	4	5	3
	Custom Size	30.517 - 32.516	4	3	1	4	3	1	4	3	2	4	3	2	4	4	2	4	4	3	4	4	3	4	4	3
	Standard Proview	28.517 - 30.516	5	3	1	5	3	1	5	3	2	5	3	2	5	3	2	5	4	3	5	4	3	5	4	3
	Custom Size	26.517 - 28.516	5	3	1	5	3	1	5	3	2	5	3	2	5	3	2	5	3	3	5	4	3	5	4	3
	Custom Size	24.516 - 26.516	5	3	1	5	3	1	5	3	2	5	3	2	5	3	2	5	3	3	5	3	3	5	3	3
84	Equal-lite	41.266	4	4	1	4	4	1	4	4	2	4	4	2	4	4	2	4	5	3	4	5	3	4	5	3
	Custom Size	38.517 - 41.265	5	4	1	5	4	1	5	4	2	5	4	2	5	4	2	5	5	3	5	5	3	5	5	3
	Custom Size	35.517 - 38.516	5	3	1	5	3	1	5	3	2	5	3	2	5	3	2	5	4	3	5	4	3	5	4	3
	Standard Proview	33.516 - 35.516	5	3	1	5	3	1	5	3	2	5	3	2	5	3	2	5	4	3	5	4	3	5	4	3

Anchor Quantities Required for "Through-Frame" Installation			Anchor Group D																							
			18" Wide			24" Wide			32" Wide			36" Wide			40" Wide			48" Wide			52-1/8" Wide			54" Wide		
			Jamb			Jamb			Jamb			Jamb			Jamb			Jamb			Jamb			Jamb		
Glass Types: 13, 14, 15 & 16 Reinforcement Level: R3 Window Buck Height (in)	Bottom Sash Description for given Range @ Window Height Shown	Bottom Sash Height Range (in)	Above MR	Below MR	Header	Above MR	Below MR	Header	Above MR	Below MR	Header	Above MR	Below MR	Header	Above MR	Below MR	Header	Above MR	Below MR	Header	Above MR	Below MR	Header	Above MR	Below MR	Header
24	Equal-lite	11.266	1	2	1	1	2	1	1	2	2	1	2	2	1	2	2	1	2	2	1	2	2	1	2	2
28	Standard Cottage	13.517 - 15.516	1	2	1	1	2	1	1	2	2	1	2	2	1	2	2	1	2	2	1	2	2	1	2	2
	Equal-lite	11.517 - 13.516	1	2	1	1	2	1	1	2	2	1	2	2	1	2	2	1	2	2	1	2	2	1	2	2
	Standard Proview	11.266 - 11.516	1	2	1	1	2	1	1	2	2	1	2	2	1	2	2	1	2	2	1	2	2	1	2	2
37.375	Tallest	23.517 - 24.891	1	2	1	1	2	1	1	2	2	1	2	2	1	2	2	1	3	2	1	3	2	1	3	2
	Standard Cottage	20.517 - 23.516	1	2	1	1	2	1	1	2	2	1	2	2	1	2	2	1	3	2	1	3	2	1	3	2
	Equal-lite	18.016 - 20.516	2	2	1	2	2	1	2	2	2	2	2	2	2	2	2	2	2	2	2	3	2	2	3	2
	Standard Proview	11.517 - 18.015	3	2	1	3	2	1	3	2	2	3	2	2	3	2	2	3	2	2	3	2	2	3	2	2
	Shortest	11.266 - 11.516	3	2	1	3	2	1	3	2	2	3	2	2	3	2	2	3	2	2	3	2	2	3	2	2
44	Tallest	29.517 - 31.516	1	3	1	1	3	1	1	3	2	1	3	2	1	3	2	1	3	2	1	3	2	1	3	2
	Custom Size	26.517 - 29.516	2	3	1	2	3	1	2	3	2	2	3	2	2	3	2	2	3	2	2	3	2	2	3	2
	Standard Cottage	23.517 - 26.516	2	3	1	2	3	1	2	3	2	2	3	2	2	3	2	2	3	2	2	3	2	2	3	2
	Equal-lite	20.517 - 23.516	3	2	1	3	2	1	3	2	2	3	2	2	3	2	2	3	3	2	3	3	2	3	3	2
	Standard Proview	18.016 - 20.516	3	2	1	3	2	1	3	2	2	3	2	2	3	2	2	3	2	2	3	3	2	3	3	2
	Custom Size	11.517 - 18.015	3	2	1	3	2	1	3	2	2	3	2	2	3	2	2	3	2	2	3	2	3	3	2	3
	Shortest	11.266 - 11.516	3	2	1	3	2	1	3	2	2	3	2	2	3	2	2	3	2	2	3	2	3	3	2	3
48	Tallest	26.517 - 35.141	2	3	1	2	3	1	2	3	2	2	3	2	2	3	2	2	4	2	2	4	2	2	4	2
	Standard Cottage	23.517 - 26.516	3	3	1	3	3	1	3	3	2	3	3	2	3	3	2	3	3	2	3	3	2	3	3	2
	Equal-lite	20.517 - 23.516	3	2	1	3	2	1	3	2	2	3	2	2	3	2	2	3	3	2	3	3	2	3	3	2
	Standard Proview	18.016 - 20.516	3	2	1	3	2	1	3	2	2	3	2	2	3	2	2	3	2	2	3	3	2	3	3	3
	Custom Size	14.517 - 18.015	3	2	1	3	2	1	3	2	2	3	2	2	3	2	2	3	2	2	3	2	3	3	2	3
	Custom Size	11.517 - 14.516	4	2	1	4	2	1	4	2	2	4	2	2	4	2	2	4	2	2	4	2	3	4	2	3
	Shortest	11.266 - 11.516	4	2	1	4	2	1	4	2	2	4	2	2	4	2	2	4	2	2	4	2	3	4	2	3
49.625	Tallest	30.517 - 36.766	2	3	1	2	3	1	2	3	2	2	3	2	2	3	2	2	4	2	2	4	2	2	4	2
	Standard Cottage	27.517 - 30.516	3	3	1	3	3	1	3	3	2	3	3	2	3	3	2	3	3	2	3	3	2	3	4	2
	Custom Size	24.517 - 27.516	3	3	1	3	3	1	3	3	2	3	3	2	3	3	2	3	3	2	3	3	2	3	3	2
	Equal-lite	21.517 - 24.516	3	2	1	3	2	1	3	2	2	3	2	2	3	2	2	3	3	2	3	3	2	3	3	2
	Standard Proview	18.016 - 21.516	3	2	1	3	2	1	3	2	2	3	2	2	3	2	2	3	2	2	3	3	3	3	3	3
	Custom Size	14.517 - 18.015	4	2	1	4	2	1	4	2	2	4	2	2	4	2	2	4	2	2	4	2	3	4	2	3
	Custom Size	11.517 - 14.516	4	2	1	4	2	1	4	2	2	4	2	2	4	2	2	4	2	2	4	2	3	4	2	3
	Shortest	11.266 - 11.516	4	2	1	4	2	1	4	2	2	4	2	2	4	2	2	4	2	2	4	2	3	4	2	3
62	Standard Cottage	34.517 - 36.767	3	3	1	3	3	1	3	3	2	3	3	2	3	3	2	3	4	2	3	4	2	3	4	2
	Custom Size	32.517 - 34.516	3	3	1	3	3	1	3	3	2	3	3	2	3	3	2	3	4	2	3	4	2	3	4	2
	Equal-lite	29.517 - 32.516	3	3	1	3	3	1	3	3	2	3	3	2	3	3	2	3	3	2	3	4	3	3	4	3
	Custom Size	26.517 - 29.516	4	3	1	4	3	1	4	3	2	4	3	2	4	3	2	4	3	2	4	3	3	4	3	3
	Standard Proview	23.517 - 26.516	4	3	1	4	3	1	4	3	2	4	3	2	4	3	2	4	3	2	4	3	3	4	3	3
	Custom Size	21.016 - 23.516	4	2	1	4	2	1	4	2	2	4	2	2	4	2	2	4	2	2	4	3	3	4	3	3
	Custom Size	18.016 - 21.015	4	2	1	4	2	1	4	2	2	4	2	2	4	2	2	4	2	2	4	2	3	4	2	3
	Custom Size	14.517 - 18.015	5	2	1	5	2	1	5	2	2	5	2	2	5	2	2	5	2	2	5	2	2	5	2	3
	Shortest	11.516 - 14.516	5	2	1	5	2	1	5	2	2	5	2	2	5	2	2	5	2	2	5	2	2	5	2	2
75	Tallest	38.517 - 41.266	4	4	1	4	4	1	4	4	2	4	4	2	4	4	2	4	4	2	4	4	2	4	4	2
	Equal-lite	36.517 - 38.516	4	3	1	4	3	1	4	3	2	4	3	2	4	3	2	4	4	2	4	4	3	4	4	3
	Custom Size	34.517 - 36.516	4	3	1	4	3	1	4	3	2	4	3	2	4	3	2	4	4	2	4	4	3	4	4	3
	Custom Size	32.517 - 34.516	4	3	1	4	3	1	4	3	2	4	3	2	4	3	2	4	3	2	4	3	2	4	3	3
	Custom Size	30.517 - 32.516	4	3	1	4	3	1	4	3	2	4	3	2	4	3	2	4	3	2	4	3	2	4	3	2
	Standard Proview	28.517 - 30.516	5	3	1	5	3	1	5	3	2	5	3	2	5	3	2	5	3	2	5	3	2	5	3	2
	Custom Size	26.517 - 28.516	5	3	1	5	3	1	5	3	2	5	3	2	5	3	2	5	3	2	5	3	2	5	3	2
	Custom Size	24.516 - 26.516	5	3	1	5	3	1	5	3	2	5	3	2	5	3	2	5	3	2	5	3	2	5	3	2
84	Equal-lite	41.266	4	4	1	4	4	1	4	4	2	4	4	2	4	4	2	4	4	2	4	4	2	4	4	3
	Custom Size	38.517 - 41.265	5	4	1	5	4	1	5	4	2	5	4	2	5	4	2	5	4	2	5	4	2	5	4	2
	Custom Size	35.517 - 38.516	5	3	1	5	3	1	5	3	2	5	3	2	5	3	2	5	3	2	5	3	2	5	3	2
	Standard Proview	33.516 - 35.516	5	3	1	5	3	1	5	3	2	5	3	2	5	3	2	5	3	2	5	3	2	5	3	2

SEE TABLE 7, SHEET 7 FOR DESIGN PRESSURES WHEN USING THIS TABLE.
MIN. BOTTOM SASH HEIGHT = WINDOW BUCK HEIGHT - 50.484
(APPLIES TO ANY HEIGHT 84" OR LESS).

! GLASS TYPES 9 THROUGH 16 MAY NOT BE USED WITH J-CHANNEL OR INTEGRAL FIN FRAMES

NOTES:

1) FRAME DIMENSIONS ARE BUCK. "MR"=MEETING RAIL.

2) FOR SIZES NOT SHOWN, ROUND UP TO THE NEXT AVAILABLE WIDTH OR HEIGHT DIMENSION SHOWN ON THE TABLE.

3) REFER TO TABLE 2, SHEET 2 FOR ANCHOR GROUP DESCRIPTIONS.

PRODUCT REVISED
As complying with the Florida Building Code
NOA-No. 23-0816.18
Expiration Date: 09/17/2025
By: Manuel Perez
Miami-Dade Product Control

Revision:
D) NO CHANGES IN THIS SHEET.

PREPARED BY A. LYNN MILLER
1070 TECHNOLOGY DRIVE
N. VENICE, FL 34275
(941) 480-1600

REGISTRATION #29296

PGT
Custom Windows and Doors
1070 TECHNOLOGY DRIVE
N. VENICE, FL 34275
(941) 480-1600

Title: DOUBLE HUNG INSTALL (LM)
Desc.: ANCHOR QUANTITIES TABLE.
Series: DH-5560
Date: 05/15/15
Drawn By: A. MORLESIN
Sheet: 11 OF 14
DWG No.: MD-DH5560-01
Rev.: D

No. 58705
A. Lynn Miller
8/10/23

A. LYNN MILLER, P.E.
P.E.# 58705

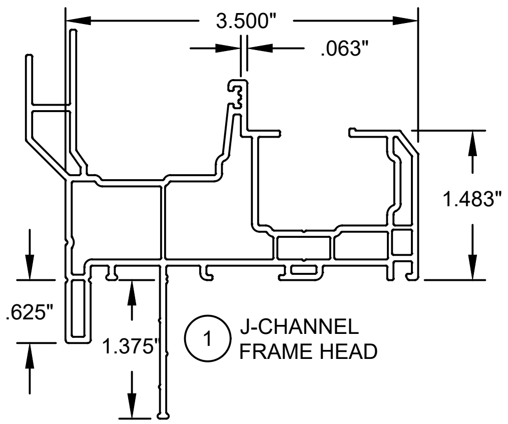
3.500"
.063"
1.483"
.625"
1.375"

① J-CHANNEL FRAME HEAD

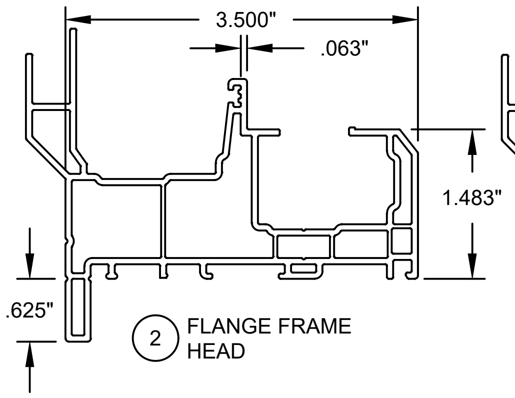
3.500"
.063"
1.483"
.625"

② FLANGE FRAME HEAD

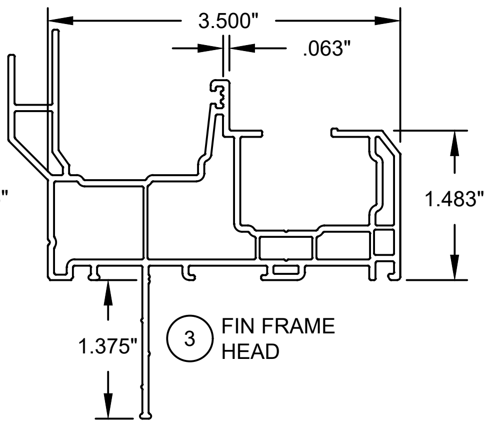
3.500"
.063"
1.483"
1.375"

③ FIN FRAME HEAD

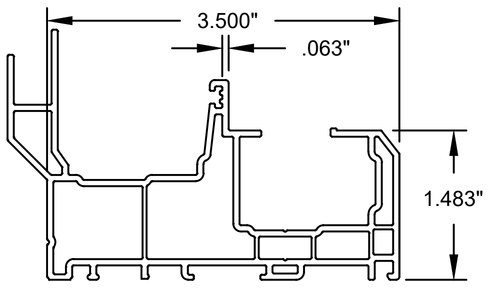
3.500"
.063"
1.483"

④ EQUAL LEG FRAME HEAD

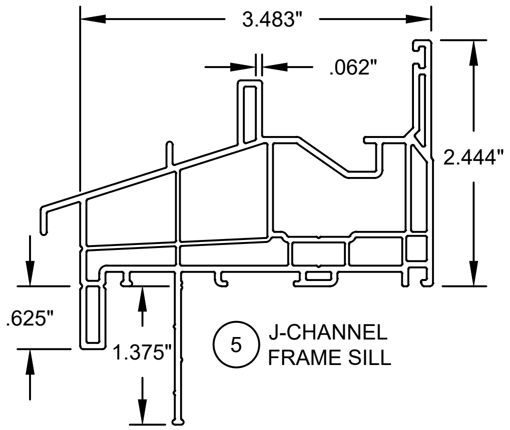
3.483"
.062"
2.444"
.625"
1.375"

⑤ J-CHANNEL FRAME SILL

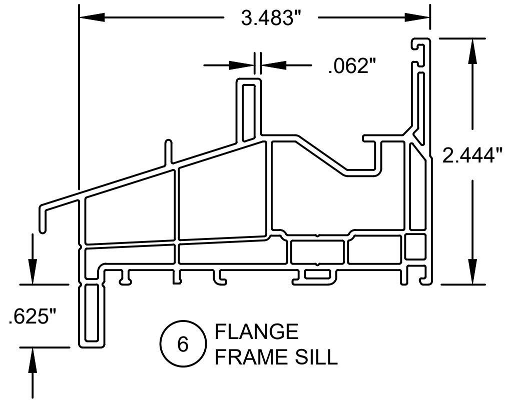
3.483"
.062"
2.444"
.625"

⑥ FLANGE FRAME SILL

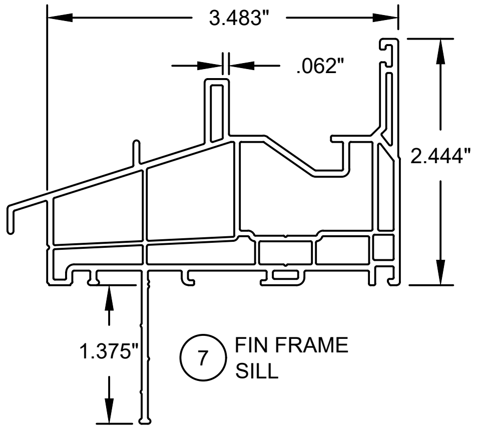
3.483"
.062"
2.444"
1.375"

⑦ FIN FRAME SILL

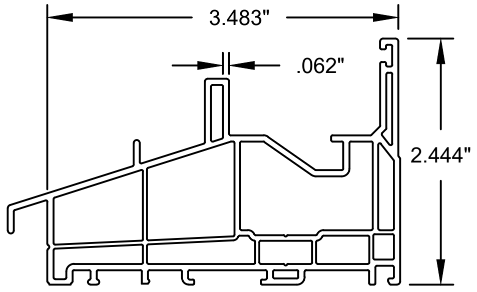
3.483"
.062"
2.444"

⑧ EQUAL LEG FRAME SILL

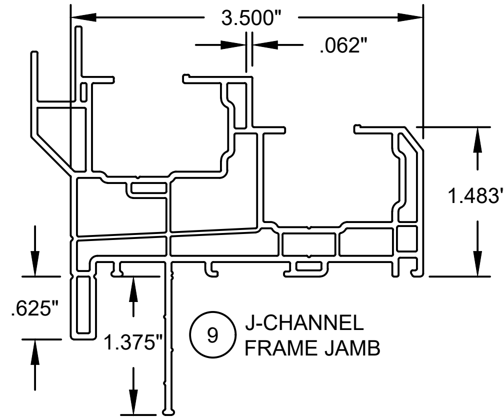
3.500"
.062"
1.483"
.625"
1.375"

⑨ J-CHANNEL FRAME JAMB

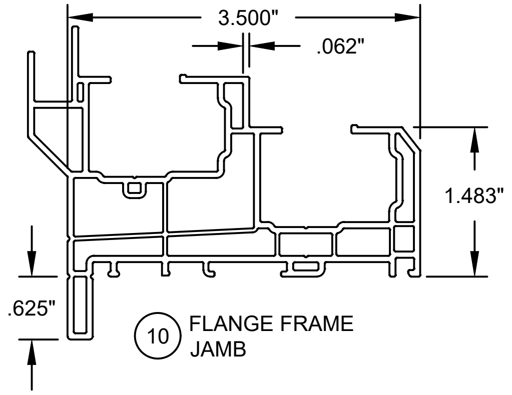
3.500"
.062"
1.483"
.625"

⑩ FLANGE FRAME JAMB

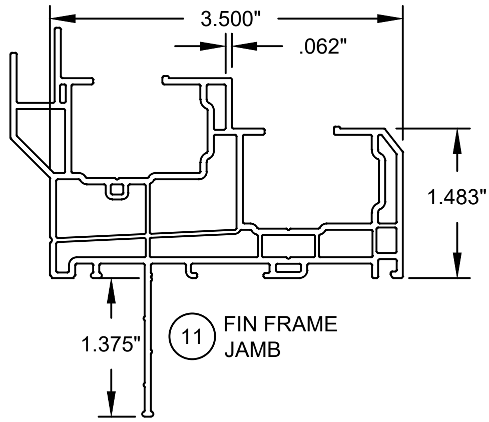
3.500"
.062"
1.483"
1.375"

⑪ FIN FRAME JAMB

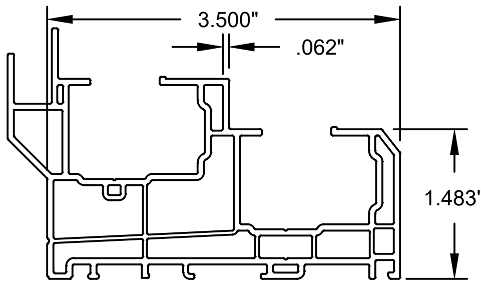
3.500"
.062"
1.483"

⑫ EQUAL LEG FRAME JAMB

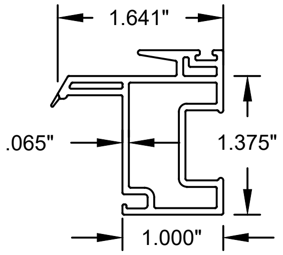
1.641"
.065"
1.375"
1.000"

⑮ DH SASH KEEPER RAIL

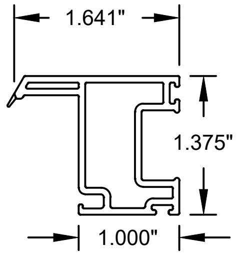
1.641"
1.375"
1.000"

⑯ SASH RAIL

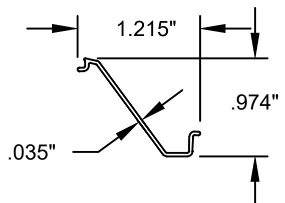
1.215"
.974"
.035"

⑰ BALANCE COVER

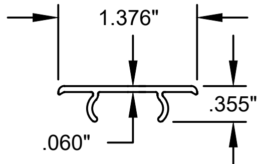
1.376"
.355"
.060"

⑱ SASH STOP / SCREW COVER

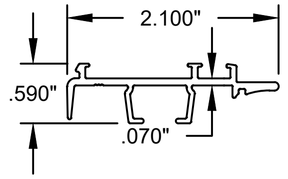
2.100"
.590"
.070"

⑲ LIFT RAIL INTERLOCK

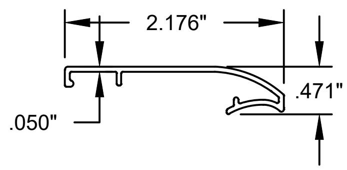
2.176"
.471"
.050"

⑳ LIFT RAIL INTERLOCK COVER

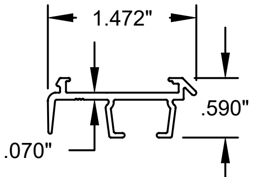
1.472"
.590"
.070"

(21) BEVELED INTERLOCK

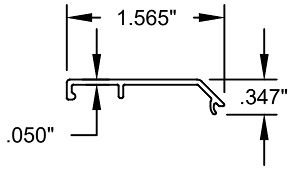
1.565"
.347"
.050"

(22) BEVELED INTERLOCK COVER

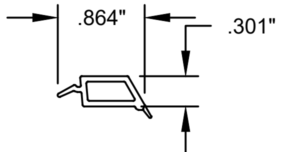

(73) IG BEAD

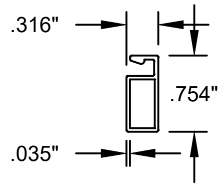

(80) EXTRUDED SCREEN FRAME

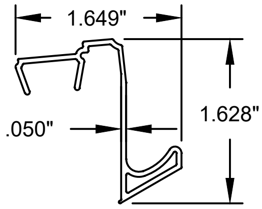
1.649"
.050"
1.628"

⑭ TOP SASH PULL

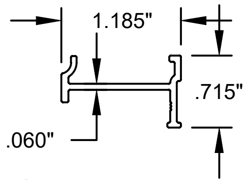
1.185"
.715"
.060"

(23) LIGHT SASH REINFORCEMENT

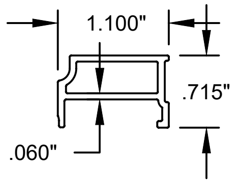
1.100"
.715"
.060"

(24) STANDARD SASH REINFORCEMENT

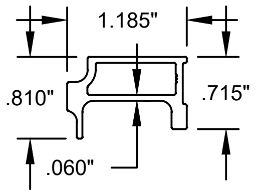
1.185"
.810"
.715"
.060"

(25) HD SASH REINFORCEMENT

PRODUCT REVISED
As complying with the Florida Building Code
NOA-No. 23-0816.18
Expiration Date: 09/17/2025
By: Manuel Perez
Miami-Dade Product Control

Revision:
D) NO CHANGES IN THIS SHEET.

PREPARED BY A. LYNN MILLER
1070 TECHNOLOGY DRIVE
N. VENICE, FL 34275
(941) 480-1600

REGISTRATION #29296

PGT
Custom Windows and Doors
1070 TECHNOLOGY DRIVE
N. VENICE, FL 34275
(941) 480-1600

Title	DOUBLE HUNG INSTALL (LM)
Date	05/15/15
Desc.	EXTRUSION PROFILES.
Drawn By	A. MORLESIN
Series	DH-5560
Sheet	12 OF 14
DWG No.	MD-DH5560-01
Rev.	D

No. 58705
A. Lynn Miller
8/10/23

A. LYNN MILLER, P.E.
P.E.# 58705

TABLE 12:

Bill of Material			
#	Part #	Description	Material
1	620113	Frame Head - J-Channel	PVC
2	620114	Frame Head - Flange	PVC
3	620115	Frame Head - Fin	PVC
4	620116	Frame Head - Equal Leg/Box	PVC
5	620105	Frame Sill - J-Channel	PVC
6	620106	Frame Sill - Flange	PVC
7	620107	Frame Sill - Fin	PVC
8	620108	Frame Sill - Equal Leg/Box	PVC
9	620109	Frame Jamb - J-Channel	PVC
10	620110	Frame Jamb - Flange	PVC
11	620111	Frame Jamb - Fin	PVC
12	620112	Frame Jamb - Equal Leg/Box	PVC
14	620171	Top Sash Pull (opt.)	PVC
15	620140	Keeper Rail	PVC
16	620129	Sash Rail (Sides, Top & Bottom)	PVC
17	620134	Balance Cover	PVC
18	620133	Sash Stop/Screw Cover	PVC
19	620156	Lift Rail Interlock	6005 T5 Al
20	620144	Lift Rail Interlock Cover	PVC
21	620157	Beveled Interlock	6005 T5 Al
22	620145	Beveled Interlock Cover	PVC
23	620150	Light Sash Reinforcement	6063 T6 Al
24	620151	Standard Sash Reinforcement	6063 T6 Al
25	620152	HD Sash Reinforcement	6063 T6 Al
30	61644	Weatherstrip, .187" x .270" Fin Pile	
31	6Q300	Weatherstrip, .190" x .300" Foam Bulb	
32	61719	Weatherstrip, .187" x .220" PolyPile	
33	61825	Weatherstrip Plug, .220" Finseal	
35	78X1MTTT	#8 x 1" Ph. PH SDS (Interlock Mounting Screw)	SS
38	720210	Weep Hole Cover	PVC
39	720185	Tilt Latch Reinforcement Clip	PVC
40	720XXXXX	Constant Force Balance	
41	78X34PPAX	#8 x 3/4" Ph. FH SMS (Con. Force Balance Screw)	SS
42		Spiral Balance	
43	720205	Spiral Balance Shoe	Nylon
44	78X114FPAX	#8 x 1-1/4" Ph. FH SMS (Spiral Balance Screw)	SS

NOTES:

1) GLASS AND SOME PARTS/OPTIONS NOT SHOWN ON DRAWING FOR CLARITY.
2) J-CHANNEL FRAME SHOWN, PARTS # 1, 5 & 9. OTHER FRAME TYPES APPLY.
3) PVC BY ENERGI WINDOW AND DOOR PROFILES, LTD., TO BE LABELED FOR AAMA EXTRUDER CODE.
4) FOR REINFORCEMENT TYPES, SEE DETAILS ON SHEETS 6 & 7.
5) ITEMS # 13, 26-29, 34, 36, 37, 65-71, 73 & 84 ARE NOT USED AND ARE NOT PART OF THIS APPROVAL.

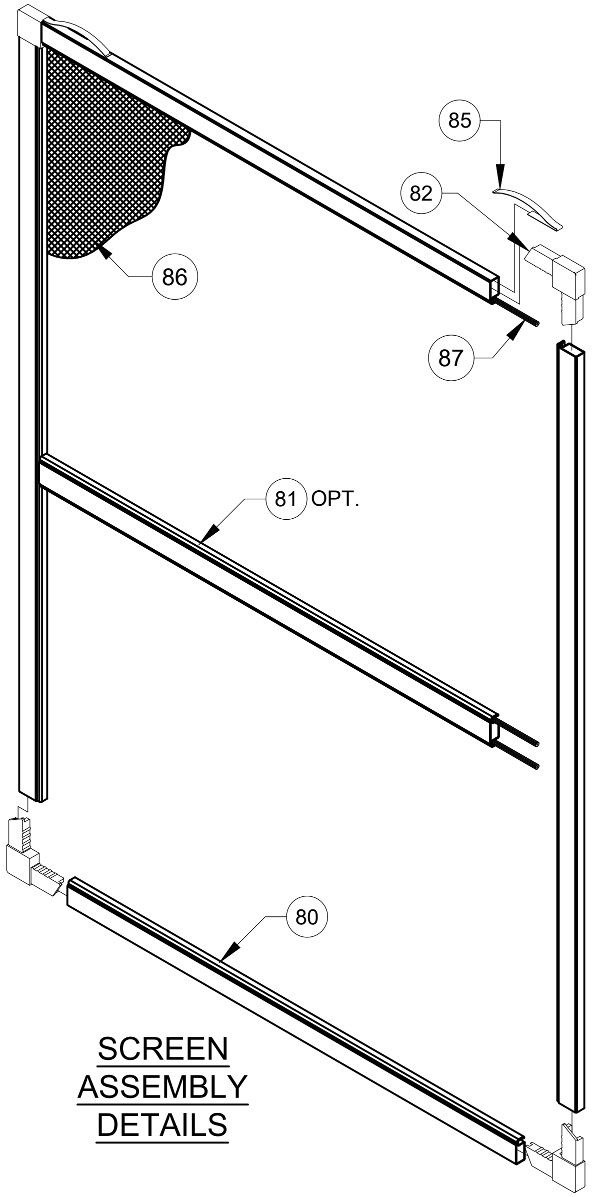

SCREEN
ASSEMBLY
DETAILS

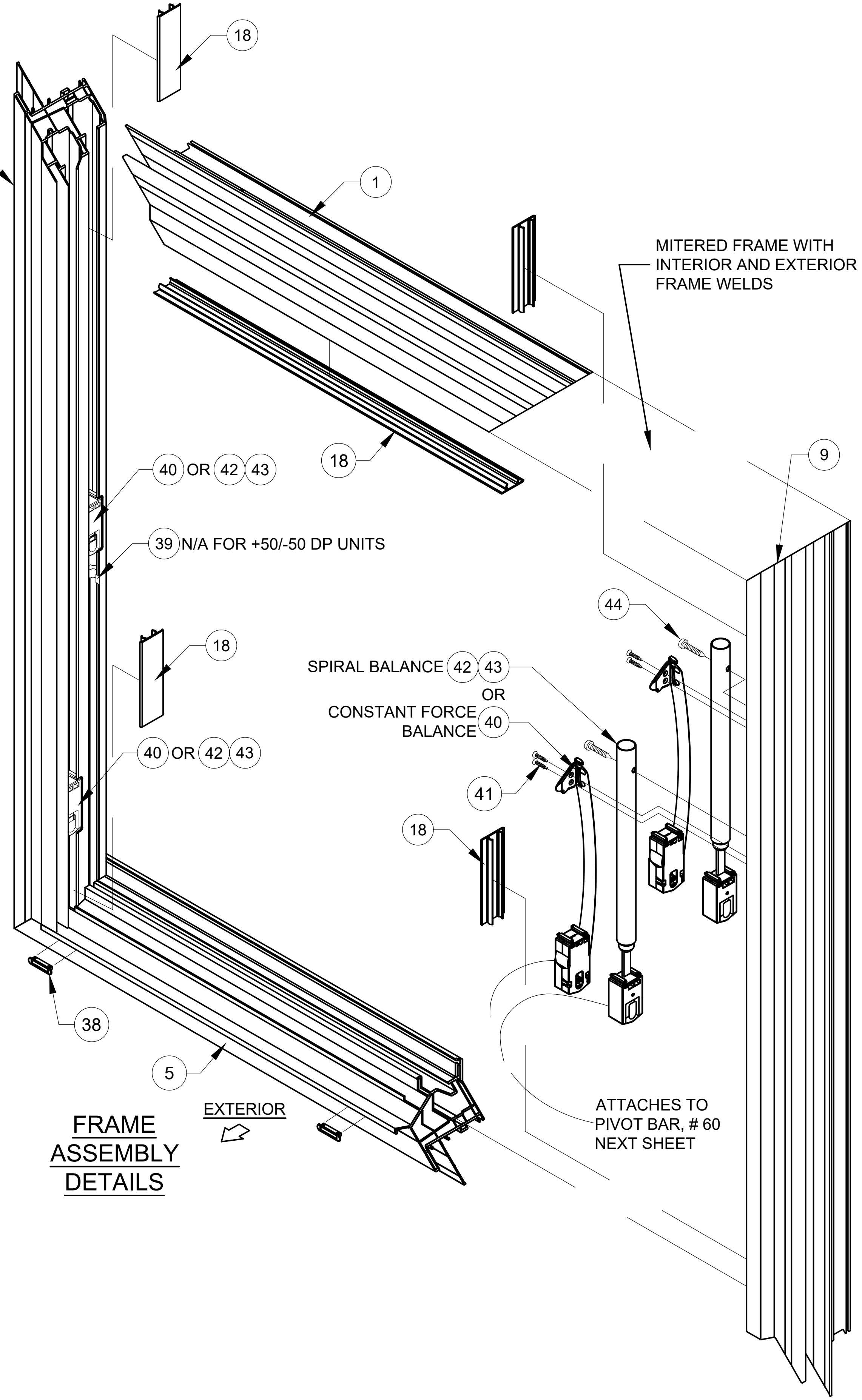

FRAME
ASSEMBLY
DETAILS

PRODUCT REVISED
As complying with the Florida Building Code
NOA-No. 23-0816.18
Expiration Date: 09/17/2025
By: Manuel Perez
Miami-Dade Product Control

Revision: D) NO CHANGES IN THIS SHEET.

PREPARED BY A. LYNN MILLER
1070 TECHOLOGY DRIVE
N. VENICE, FL 34275
(941) 480-1600

REGISTRATION #29296

PGT
Custom Windows and Doors
1070 TECHNOLOGY DRIVE
N. VENICE, FL 34275
(941) 480-1600

Date	05/15/15
Drawn By	A. MORLESIN
Rev.	D
DWG No.	MD-DH5560-01
Sheet	13 OF 14
Title	DOUBLE HUNG INSTALL (LM)
Desc.	ASSEMBLY & PART LIST
Series	DH-5560

ANTHONY LYNN MILLER
No. 58705
A. Lynn Miller
8/10/23

A. LYNN MILLER, P.E.
P.E.# 58705

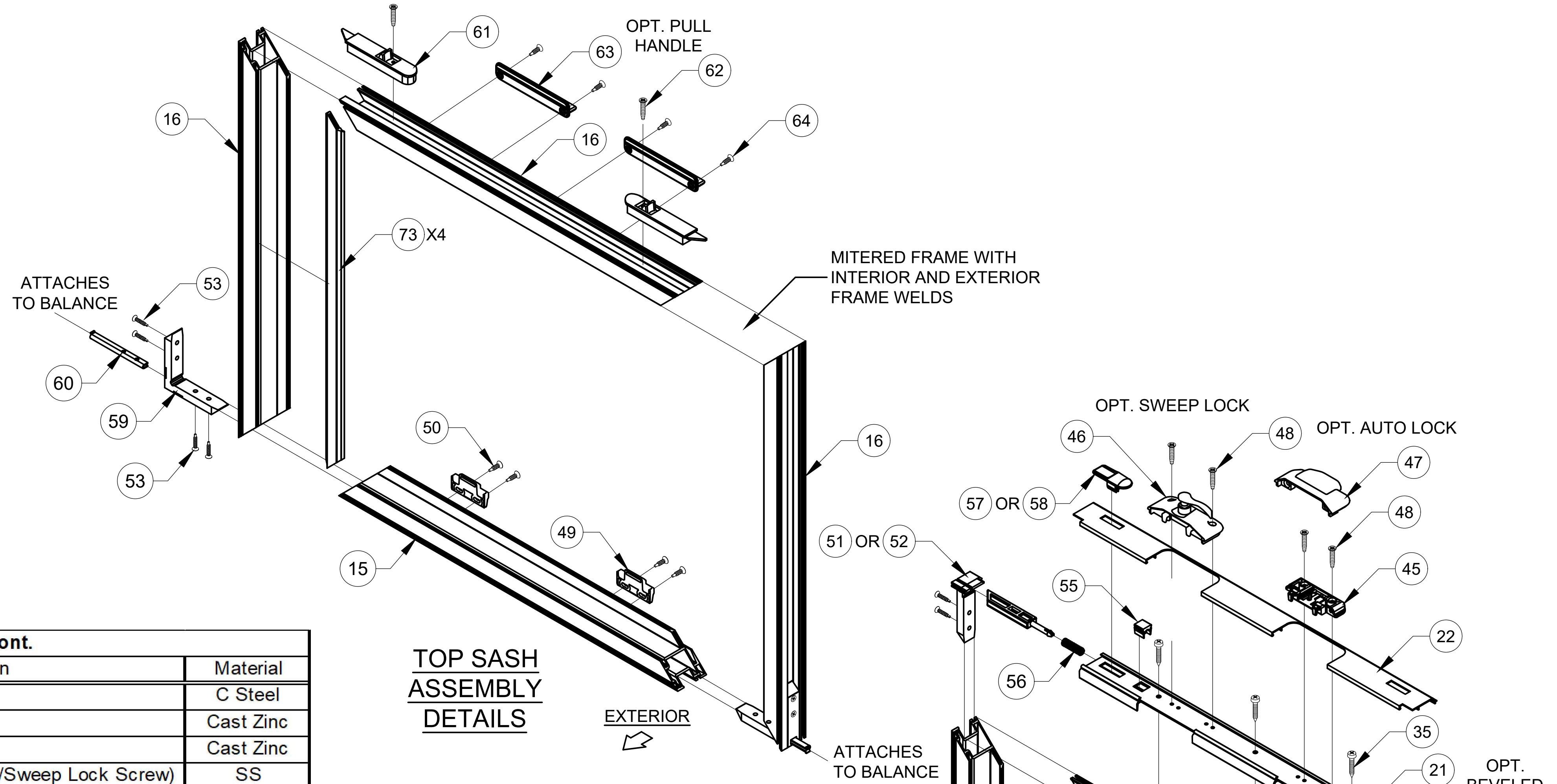
16
61
63
OPT. PULL HANDLE
62
64
16
73 X4
MITERED FRAME WITH INTERIOR AND EXTERIOR FRAME WELDS
ATTACHES TO BALANCE
53
60
59
53
50
49
15
16
EXTERIOR
ATTACHES TO BALANCE
OPT. SWEEP LOCK
OPT. AUTO LOCK
46
48
47
57 OR 58
48
51 OR 52
45
55
22
56
35
21
OPT. BEVELED INTERLOCK & COVER

TOP SASH ASSEMBLY DETAILS

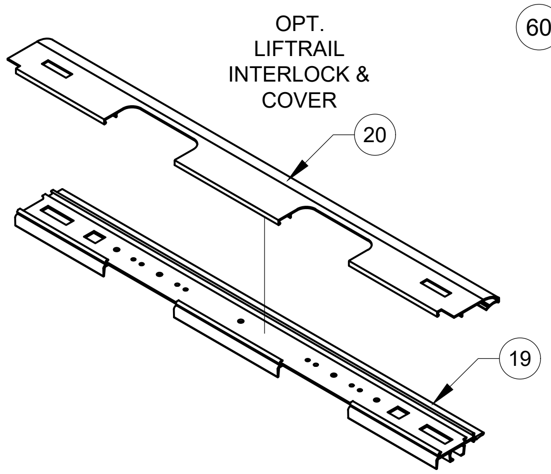
OPT. LIFTRAIL INTERLOCK & COVER
20
19

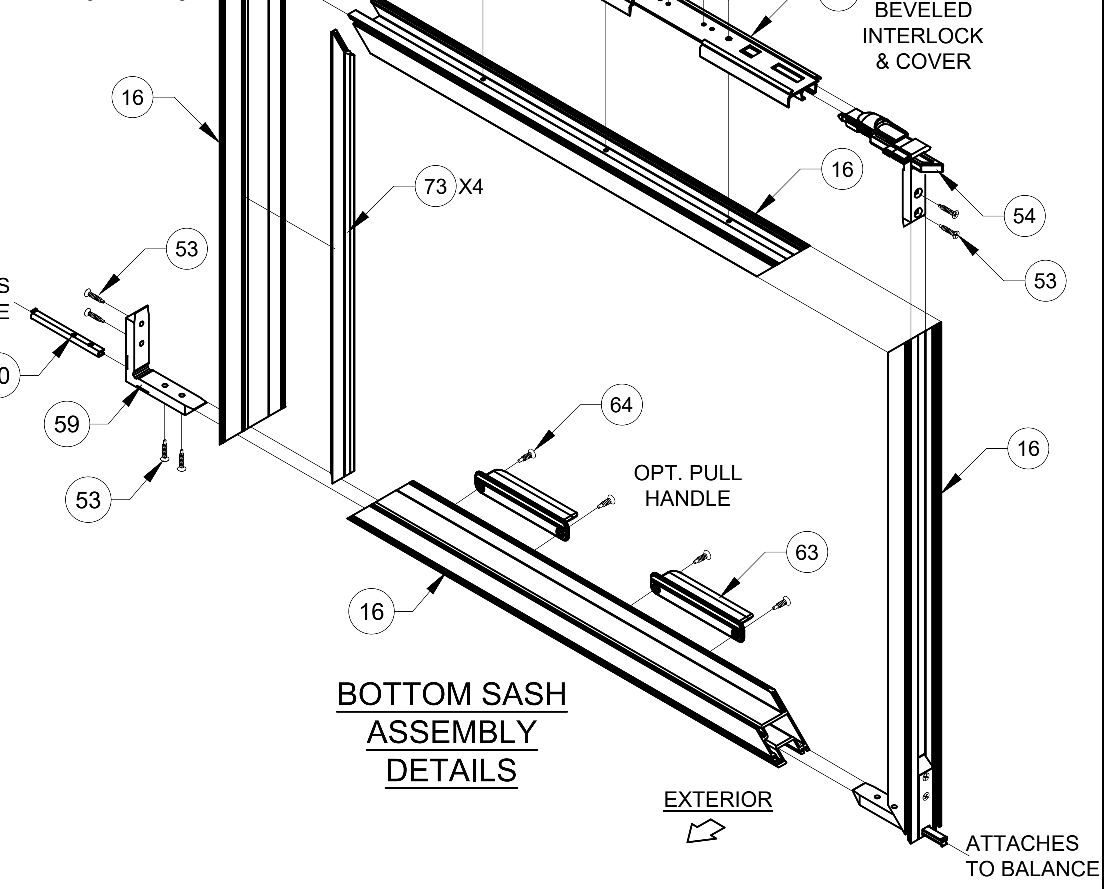
16
73 X4
16
54
53
ATTACHES TO BALANCE
53
60
59
53
64
OPT. PULL HANDLE
63
16
16
EXTERIOR
ATTACHES TO BALANCE

BOTTOM SASH ASSEMBLY DETAILS

TABLE 12, CONT.:

Bill of Material, cont.			
#	Part #	Description	Material
45	720197	Auto Lock Mechanism	C Steel
46	720198&9	Sweep Lock	Cast Zinc
47	720195&6	Auto Lock Cover Assembly	Cast Zinc
48	76X1180PTX	#6 x 1-1/8" Ph. FH SDS (Auto/Sweep Lock Screw)	SS
49	720200	Auto and Sweep Lock Keeper	Cast Zinc
50	76X34PPTX	#6 x 3/4" PH. PH SDS (Keeper Screw)	SS
51	420181 L/R	Beveled Tilt Latch Corner Key	PVC
52	420182 L/R	Pull Rail Tilt Latch Corner Key	PVC
53	7634PHFL	#6 x 3/4" Ph. FH SDS (Pivit Bar & tilt Latch Screw)	SS
54	420183	Tilt Latch	PVC
55	420184	Tilt Latch Retainer	PVC
56	720207	1" Tilt Latch Spring	SS
57	420186	Plastic Tilt Latch Finger Pull	PVC
58	720192	Metal Tilt Latch Finger Pull	Cast Zinc
59	420180	Pivot Bar Corner Key (Top & Bottom Sash)	PVC
60	720206	Pivot Bar (Top & Bottom Sash)	SS
61	7101/7102	Top Sash Tilt Latch (L&R)	PVC
62	76X12FPTX	#6 x 1/2" Ph. FH SDS (Top Sash Tilt Latch Screw)	SS
63	720191	Sash Pull Handle (opt.)	Cast Zinc
64	78X34FPT	#8 x 3/4" Ph. FH SDS (Pull Handle Screw)	SS
73	720136	I.G. Bead	PVC
74		Backbedding, GE 7700 or Dow 791 or Dow 983	Silicone
75	71684&5	Setting Block (7/8" x 2" x 1/8"), 85 +/- 5 duro.	EPDM
80	61012	Extruded Screen Frame	Alum
81	60775	Extruded Screen Spreader Bar	Alum
82	7CKGLB21	Screen Corner Key for Extruded Frame	PVC
83	72045	Extruded Screen Spreader Bar Clip	Alum
85	7CASPM	Tension Spring	SS
86	61816C48	Screen Cloth	Fiberglass
87	61635/61624	.140" Screen Spline (Machine/Hand Rolled)	Vinyl

PRODUCT REVISED
As complying with the Florida Building Code
NOA-No. 23-0816.18
Expiration Date: 09/17/2025
By: Manuel Perez
Miami-Dade Product Control

Revision:
D) NO CHANGES IN THIS SHEET.

PREPARED BY A. LYNN MILLER
1070 TECHNOLOGY DRIVE
N. VENICE, FL 34275
(941) 480-1600

REGISTRATION #29296

PGT
Custom Windows and Doors
1070 TECHNOLOGY DRIVE
N. VENICE, FL 34275
(941) 480-1600

Title	DOUBLE HUNG INSTALL (LM)
Date	05/15/15
Drawn By	A. MORLESIN
Desc.	ASSEMBLY & PARTS LIST.
Sheet	14 OF 14
DWG No.	MD-DH5560-01
Rev.	D
Series	DH-5560

No. 58705
A Lynn Miller
8/10/23

A. LYNN MILLER, P.E.
P.E.# 58705