MIAMI-DADE COUNTY
PRODUCT CONTROL SECTION
11805 SW 26 Street, Room 208
Miami, Florida 33175-2474
T (786) 315-2590 F (786) 315-2599
www.miamidade.gov/building

DEPARTMENT OF REGULATORY AND ECONOMIC RESOURCES (RER)
BOARD AND CODE ADMINISTRATION DIVISION

NOTICE OF ACCEPTANCE (NOA)

N.I. Illinois, LLC dba SAFE-AIR DOWCO
1855 South 54th Ave.
Cicero, IL 60804

SCOPE: This NOA is being issued under the applicable rules and regulations governing the use of construction materials. The documentation submitted has been reviewed and accepted by Miami-Dade County RER-Product Control Section to be used in Miami Dade County and other areas where allowed by the Authority Having Jurisdiction (AHJ).

This NOA shall not be valid after the expiration date stated below. The Miami-Dade County Product Control Section (In Miami Dade County) and/or the AHJ (in areas other than Miami Dade County) reserve the right to have this product or material tested for quality assurance purposes. If this product or material fails to perform in the accepted manner, the manufacturer will incur the expense of such testing and the AHJ may immediately revoke, modify, or suspend the use of such product or material within their jurisdiction. RER reserves the right to revoke this acceptance if it is determined by Miami-Dade County Product Control Section that this product or material fails to meet the requirements of the applicable building code.

This product is approved as described herein and has been designed to comply with the Florida Building Code, including the High Velocity Hurricane Zone.

DESCRIPTION: Model 1605WDM Aluminum Louver w/ and w/o Damper – L.M.I.

APPROVAL DOCUMENT: Drawing No. **16075WDM**, titled "1605WDM Louver w/ and w/o Damper", sheets 1 through 21 of 21, prepared by Rice Engineering, dated 09/10/18, signed and sealed by Wayne K. Helmila, P.E., bearing the Miami-Dade County Product Control Renewal stamp with the Notice of Acceptance number and expiration date by the Miami-Dade County Product Control Section.

MISSILE IMPACT RATING: Large and Small Missile Impact Resistant

LABELING: Each unit shall bear a permanent label with the manufacturer's name or logo, state, model/ series, and following statement: "Miami-Dade County Product Control Approved", unless otherwise noted herein.

LIMITATION: This system is to be installed in a location where the room behind the louver is designed to drain water penetrating into the room, and the room will house water resistant/waterproof equipment, components, or supplies.

RENEWAL of this NOA shall be considered after a renewal application has been filed and there has been no change in the applicable building code negatively affecting the performance of this product.

TERMINATION of this NOA will occur after the expiration date or if there has been a revision or change in the materials, use, and/or manufacture of the product or process. Misuse of this NOA as an endorsement of any product, for sales, advertising or any other purposes shall automatically terminate this NOA. Failure to comply with any section of this NOA shall be cause for termination and removal of NOA.

ADVERTISEMENT: The NOA number preceded by the words Miami-Dade County, Florida, and followed by the expiration date may be displayed in advertising literature. If any portion of the NOA is displayed, then it shall be done in its entirety.

INSPECTION: A copy of this entire NOA shall be provided to the user by the manufacturer or its distributors and shall be available for inspection at the job site at the request of the Building Official.

This NOA **renews NOA No. 21-0825.05** and consists of this page 1 and evidence pages E-1 and E-2, as well as approval document mentioned above.

The submitted documentation was reviewed by **Carlos M. Utrera, P.E.**

MIAMI-DADE COUNTY APPROVED

NOA No. 23-0928.04
Expiration Date: August 30, 2028
Approval Date: November 9, 2023

NOTICE OF ACCEPTANCE: EVIDENCE SUBMITTED

1. EVIDENCE SUBMITTED UNDER PREVIOUS NOA's

A. DRAWINGS

1. Manufacturer's die drawings and sections.
(Submitted under NOA No. 18-0117.13)

2. Drawing No. **1605WDM**, titled "1605WDM Louver w/ and w/o Damper", sheets 1 through 21 of 21, dated 09/10/18, prepared by Rice Engineering, signed and sealed by Wayne K. Helmila, P.E.
(Submitted under NOA No. 18-0217.03)

B. TESTS

1. Test reports on: 1) Uniform Static Air Pressure Test, Loading per FBC, TAS 202-94
2) Large Missile Impact Test per FBC, TAS 201-94
3) Cyclic Wind Pressure Loading per FBC, TAS 203-94
along with installation diagram of Model 1605WDM Louver System, prepared by Intertek, Test Report No. **H3539.01-801-18-R2**, dated 09/20/17 and revised on 05/24/18, signed and sealed by Tyler Westerling, P.E.
(Submitted under NOA No. 18-0217.03)

2. Test Report on Wind Driven Rain Resistance Test per TAS 100(A)-95 on a Model 1605 WDM Aluminum Louver with damper, prepared by Intertek, Test Report No. **H0223.04-801-18-R1,** dated 09/28/17 and revised on 11/21/17, signed and sealed by Tyler Westerling, P.E.
(Submitted under NOA No. 18-0217.03)

3. Test Report on High Velocity Wind Driven Rain Resistance Test per ANSI/AMCA 550-09 on a Model 1605WDM Aluminum Louver with damper, prepared by Intertek, Test Report No. **H0223.03-801-18-R1,** dated 09/28/17 and revised on 11/21/17, signed and sealed by Tyler Westerling, P.E.
(Submitted under NOA No. 18-0217.03)

C. CALCULATIONS *(Submitted under NOA No. 18-0217.03)*

1. Louver structural calculations dated 11/02/17, prepared by Rice Engineering, signed and sealed by Wayne K. Helmila, P.E.

D. QUALITY ASSURANCE

1. Miami-Dade Department of Regulatory and Economic Resources (RER)

E. MATERIAL CERTIFICATIONS

1. None.

Carlos M. Utrera, P.E.
Product Control Examiner
NOA No. 23-0928.04
Expiration Date: August 30, 2028
Approval Date: November 9, 2023

NOTICE OF ACCEPTANCE: EVIDENCE SUBMITTED

1. EVIDENCE SUBMITTED UNDER PREVIOUS NOA's (CONTINUED)

F. STATEMENTS

1. Statement letter of code conformance to the **FBC 6th Edition (2017)** issued by Rice Engineering, dated 04/16/18, signed and sealed by Wayne K. Helmila, P.E.
(Submitted under NOA No. 18-0217.03)

2. Statement letter of no financial interest issued by Rice Engineering, dated 04/16/18, signed and sealed by Wayne K. Helmila, P.E.
(Submitted under NOA No. 18-0217.03)

3. Private Labeling Agreement document in conformance to Product Control guidelines dated December 3, 2018, signed by Steve Nailor and David Soden.
(Submitted under NOA No. 18-0217.03)

2. EVIDENCE SUBMITTED UNDER NOA # 21-0825.05

A. DRAWINGS

1. None.

B. TESTS

1. None.

C. CALCULATIONS

1. None.

D. QUALITY ASSURANCE

1. Miami-Dade Department of Regulatory and Economic Resources (RER)

E. MATERIAL CERTIFICATIONS

1. None.

F. STATEMENTS

1. Statement letter of code conformance to the **7th edition (2020) FBC**, issued by Rice Engineering, dated 05/19/21, signed and sealed by Wayne K. Helmila, P.E.

Carlos M. Utrera, P.E.
Product Control Examiner
NOA No. 23-0928.04
Expiration Date: August 30, 2028
Approval Date: November 9, 2023

DRAWING INDEX:

1. INDEX TO DRAWING AND NOTES.
2.. 1605WDM LOUVER- FLANGE FRAME SLEEVE MOUINT
3. 1605WDM LOUVER- CONTINUOUS ANGLE MOUNT
4. 1605WDM / DAMPER- FLANGE FRAME SLEEVE MOUNT
5. 1605WDM / DAMPER- CONTINUOUS ANGLE MOUNT
6. 1605WDM LOUVER- FLANGE FRAME SLEEVE MOUNT HEAD & SILL DETAIL
7. 1605WDM LOUVER- CONTINUOUS ANGLE MOUNT HEAD & SILL DETAIL.
8. 1605WDM LOUVER- BLADE SUPPORT DETAIL.
9. 1605WDM LOUVER- FLANGE FRAME SLEEVE MOUNT JAMB DETAIL
10. 1605WDM LOUVER- CONTINUOUS ANGLE MOUNT JAMB DETAIL.
11. 1605WDM LOUVER- FLANGE FRAME SLEEVE MOUNT MULLION DETAIIL.
12. 1605WDM LOUVER- CONTINUOUS ANGLE MOUNT MULLION DETAIL.
13. 1605WDM LOUVER / DAMPER FLANGE FRAME W/ SLEEVE & CONTINUOUS ANGLE HEAD & SILL DETAIL.
14. 1605WDM / DAMPER- FLANGE FRAME SLEEVE MOUNT JAMB AND MULLION DETAIL
15. 1605WDM LOUVER / DAMPER CONTINUOUS ANGLE MOUNT JAMB AND MULLION DETAIL.
16. 1605WDM LOUVER W/ AND W/O DAMPER- SLEEVE / CONTINUOUS MOUNT PART PROFILES.
17. 1605WDM LOUVER W/ AND W/O DAMPER- SLEEVE / CONTINUOUS MOUNT PART PROFILES.
18. MULLION ANGLES BACK OF WALL MOUNT
19. 1605WDM LOUVER W/ AND W/O DAMPER AVAILABLE SHAPES
20. 1605WDM LOUVER W/ AND W/O DAMPER- SLEEVE / CONTINUOUS MOUNT BILL OF MATERIAL.
21. 1605WDM LOUVER W/ AND W/O DAMPER NOTES AND FASTENER SCHEDULE.

NOTES:

1) THE 1605WDM HAS BEEN TESTEDIN ACCORDANCE WITH THE MIAMI-DADE COUNTY PROTOCOLS TAS-201, 202, & 203 FOR LARGE MISSILE IMPACT, UNIFORM PRESSURE AND CYCLIC WIND PRESSURE.

2) THIS LOUVER SYSTEM IS APPROVED FOR APPLICATIONS WITH DESIGN PRESSURES OF +/- 150 PSF OR LESS

3) THIS LOUVER SYSTEM IS NON-BEARING AND IS NOT DESIGNED TO WITHSTAND BUILDING DEAD LOADS.

4) LOUVER ANCHORS ARE REVIEWED FOR ATTACHMENT INTO STEEL, CONCRETE, MASONRY, OR TIMBER SUBSTRUCTURE. MIMIMUM EDGE DISTANCE AND EMBEDMENT REQUIREMENTS ARE SHOWN. SAFE AIR DOES NOT DETERMINE THE STURCTURE INTEGRITY OF THE SUBSTRUCTURE.

5) MAXIMMUM SINGLE SECTION SIZE : 72" WIDE X 120" HIGH.

6) MAXIMUM ASSEMBLED LOUVER SIZE UNLIMITED WIDE X 120" HIGH. MAX. MULLION SPACING IS 72".

7) SECTIONS OR ASSEMBLIES MAY BE STACKED VERTICALLY PROVIDING A SUITABLE STRUCTURAL SUPPORT IS DESIGNED AND INSTALLED BY OTHERS TO SUPPORT ALL LOADS TRANSFERRED FROM THE LOUVER.

TESTS PREFORMED:
TAS100 A WIND DRIVEN RAIN RESISTANCE W/ DAMPER
TAS-201 LARGE MISSILE IMPACT
TAS-202 UNIFORM STATIC AIR PRESSURE TEST
TAS-203 CYCLIC WIND PRESUSRE TEST
DESIGN PRESSURE RATING 150 PSF

PRODUCT RENEWED
as complying with the Florida Building Code
NOA-No. 23-0928.04
Expiration Date 08/30/2028
By [signature]
Miami-Dade Product Control

PRODUCT REVISED
as complying with the Florida Building Code
NOA-No. **21-0825.05**
Expiration Date: **08/30/2023**
By: Manuel Perez
Miami-Dade Product Control

PRODUCT REVISED
as complying with the Florida Building Code
Acceptance No 18-1217.03
Expiration Date AUG 30, 2023
By Ishwaj J. Chand
Miami-Dade Product Control

DWN BY: fcortinas | CHK BY: MAstourian
DATE: 9/10/2018 | SCALE: NTS
SHEET: 1 OF 21
DWG NO: 1605WDM
REV -

SAFE·AIR DOWCO®
NI ILLINOIS, LLC.
1855 SOUTH 54TH AVE. CICERO, IL 60804
Tel. 708-652-9100 Fax 708-652-9100

TITLE: 1605WDM LOUVER W/ AND W/O DAMPER INDEX

WAYNE K. HELMILA
LICENSE
No. 59092
STATE OF FLORIDA
PROFESSIONAL ENGINEER
Wayne Helmila
02/19/2019

COA: 9090

RICE ENGINEERING
105 School Creek Trail
Luxemburg, WI 54217
Phone: (920) 617-1042
Fax: (920) 617-1100
www.rice-inc.com

Florida Firm No: F-01000005061
Certificate of Authorization: #9090
Wayne K. Helmila
Registration No: 59092

N:\Drawing\LOUVERS\AMCA\1605WDF\1605WDM\1605WDM 216 X 120 FL Sleeve - SA.dft

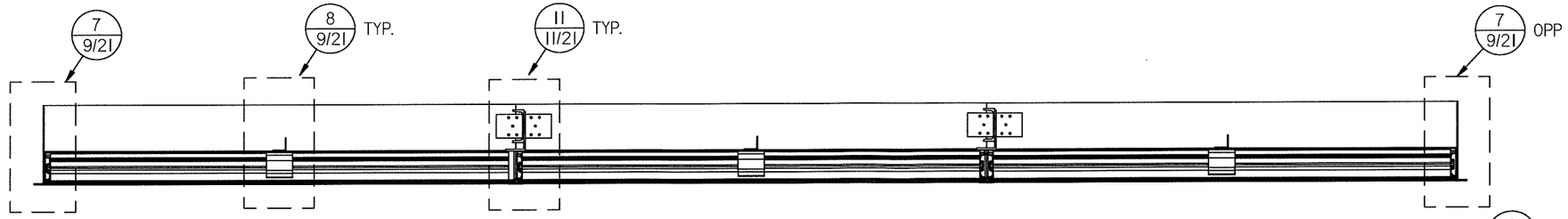

HORIZONTAL CROSS SECTION

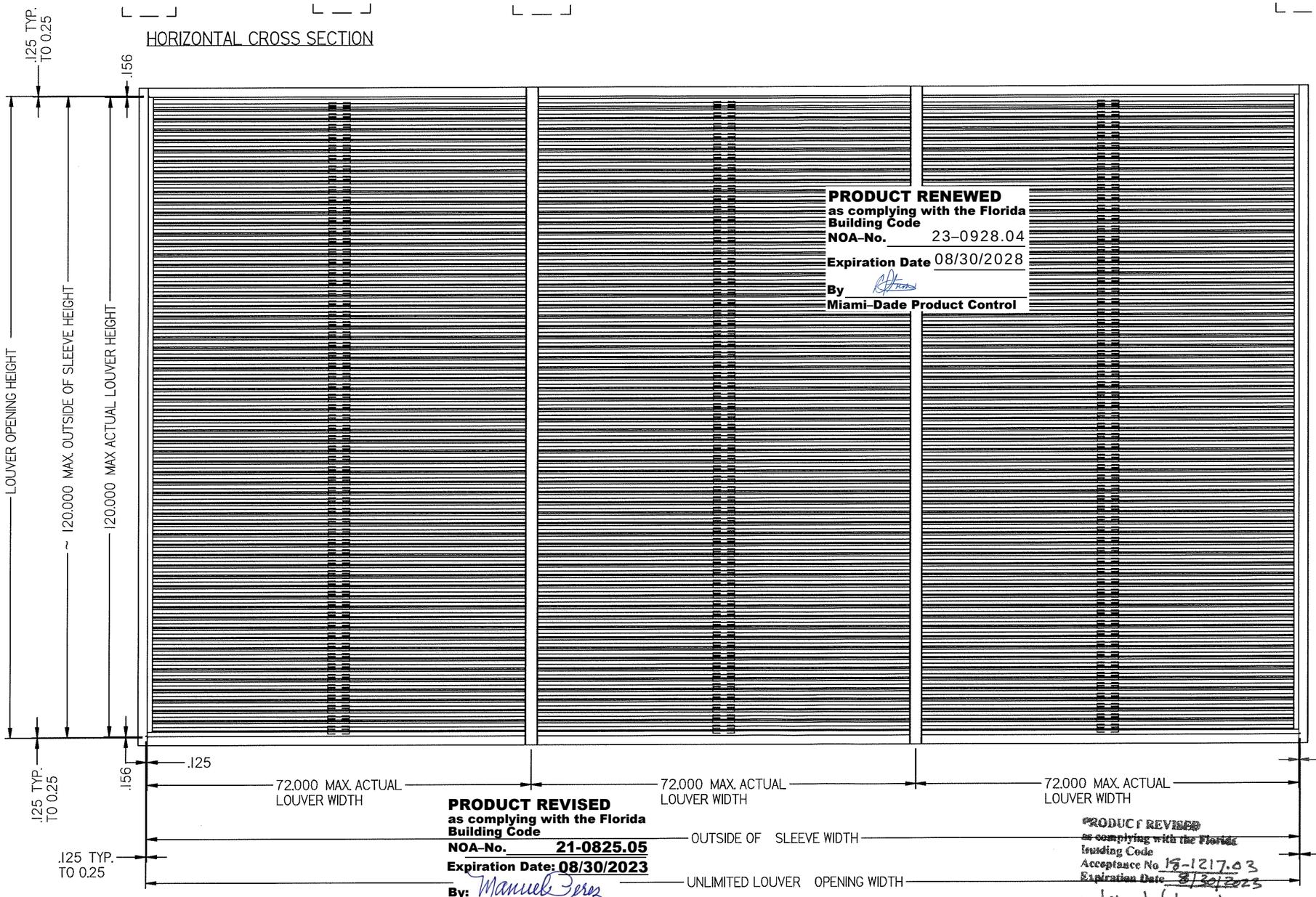

ELEVATION

PRODUCT RENEWED
as complying with the Florida Building Code
NOA-No. 23-0928.04
Expiration Date 08/30/2028
By
Miami-Dade Product Control

PRODUCT REVISED
as complying with the Florida Building Code
NOA-No. 21-0825.05
Expiration Date: 08/30/2023
By: Manuel Perez
Miami-Dade Product Control

PRODUCT REVISED
as complying with the Florida
Building Code
Acceptance No. 18-1217.03
Expiration Date 8/30/2023
By Cheryl Chandler
Miami-Dade Product Control

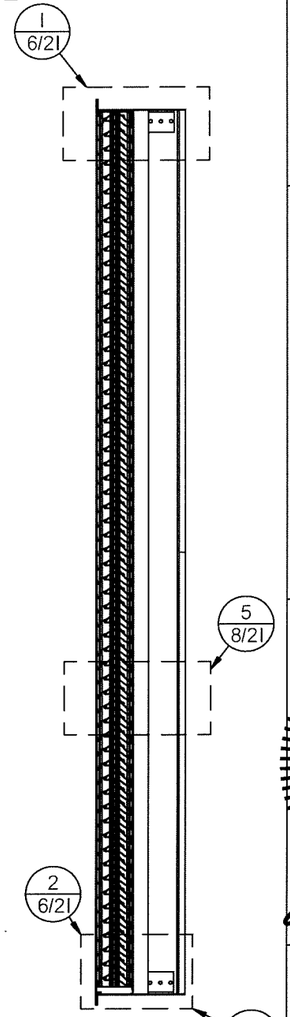

VERTICAL CROSS SECTION

N:\Drawing\LOUVERS\AMCA\1605WDF\1605WDM\1605WDM 216 X 120 FL Sleeve - SA.dft

DWN BY: fcortinas
CHK BY: MAstourian
DATE: 9/10/2018
SCALE: NTS
SHEET: 2 OF 21
REV: -
DWG NO: 1605WDM

safe-AIR DOWCO®
NI ILLINOIS, LLC.
1855 SOUTH 54TH AVE. CICERO, IL 60804
Tel. 708-652-9100 Fax 708-652-9100

TITLE: 1605WDM LOUVER FLANGE FRAME SLEEVE MOUNT

WAYNE K. HELMILA
LICENSE
No. 59092
STATE OF FLORIDA
PROFESSIONAL ENGINEER
02/19/2019

COA: 9090

RICE ENGINEERING
105 School Creek Trail
Luxemburg, WI 54217
Phone: (920) 617-1042
Fax: (920) 617-1100
www.rice-inc.com

Florida Firm No: F-01000005061
Certificate of Authorization: #9090
Wayne K. Helmila
Registration No: 59092

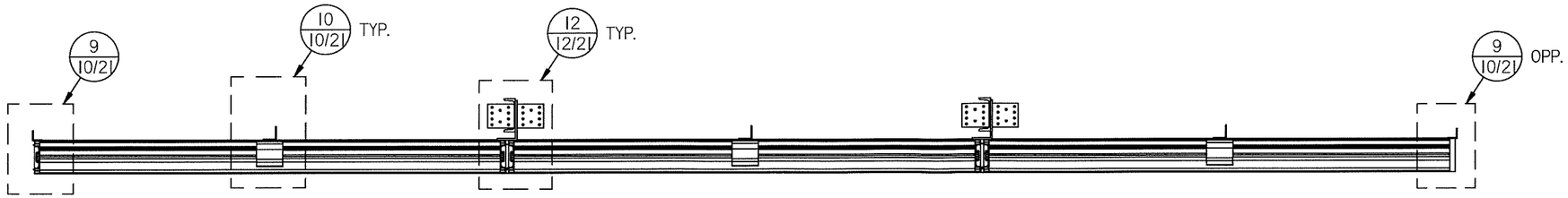

HORIZONTAL CROSS SECTION

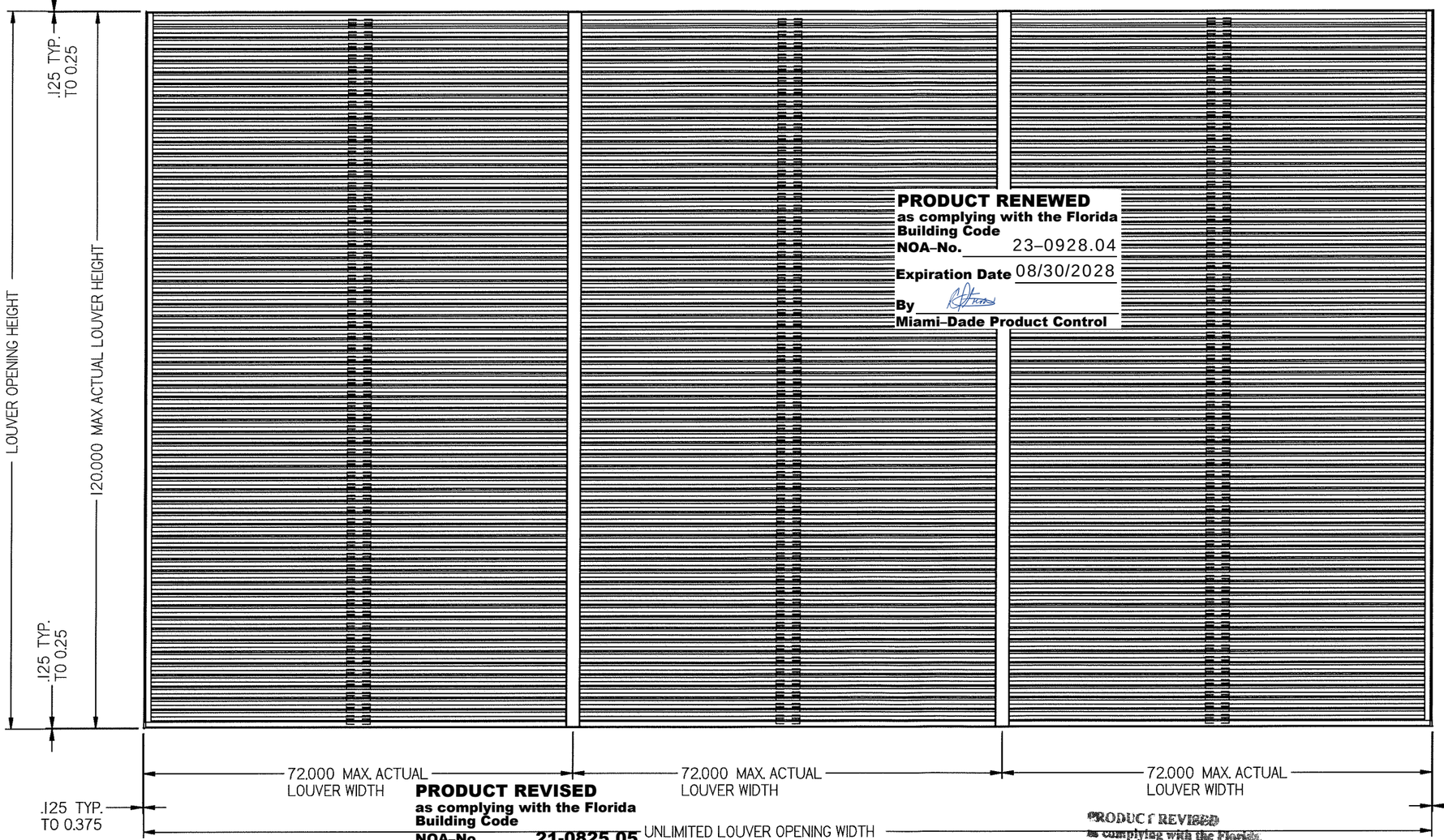

ELEVATION

PRODUCT RENEWED
as complying with the Florida Building Code
NOA-No. 23-0928.04
Expiration Date 08/30/2028
By
Miami-Dade Product Control

PRODUCT REVISED
as complying with the Florida Building Code
NOA-No. 21-0825.05
Expiration Date: 08/30/2023
By: Manuel Perez
Miami-Dade Product Control

PRODUCT REVISED
as complying with the Florida
Building Code
Acceptance No 18-1217.03
Expiration Date 8/30/2023
By
Miami-Dade Product Control

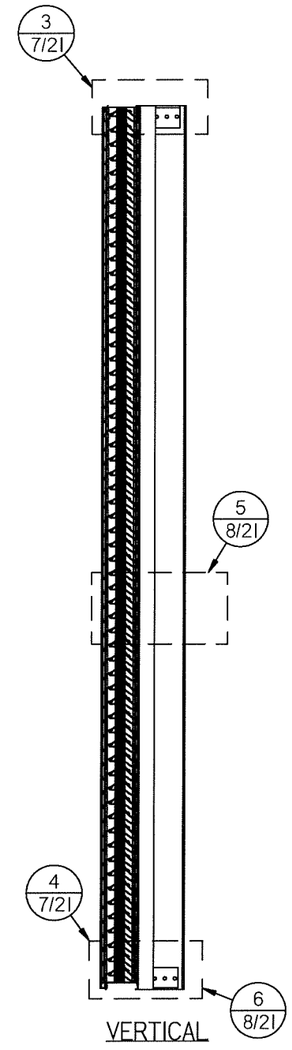

VERTICAL
CROSS SECTION

N:\Drawing\LOUVERS\AMCA\1605WDF\1605WDM\1605WDM 216 X 120 FL Sleeve - SA.dft

DWN BY: fcortinas
CHK BY: MAstourian
DATE: 9/10/2018
SCALE: NTS
SHEET: 3 OF 21
REV -
DWG NO: 1605WDM

safe-air DOWCO®
NI ILLINOIS, LLC.
1855 SOUTH 54TH AVE. CICERO, IL 60804
Tel. 708-652-9100 Fax 708-652-9100

TITLE: 1605WDM LOUVER
COUNTINOUS ANGLE MOUNT

WAYNE K. HELMILA
LICENSE
No. 59092
STATE OF FLORIDA
PROFESSIONAL ENGINEER
02/19/2019

COA: 9090

RICE
ENGINEERING
105 School Creek Trail
Luxemburg, WI 54217
Phone: (920) 617-1042
Fax: (920) 617-1100
www.rice-inc.com

Florida Firm No: F-01000005061
Certificate of Authorization: #9090
Wayne K. Helmila
Registration No: 59092

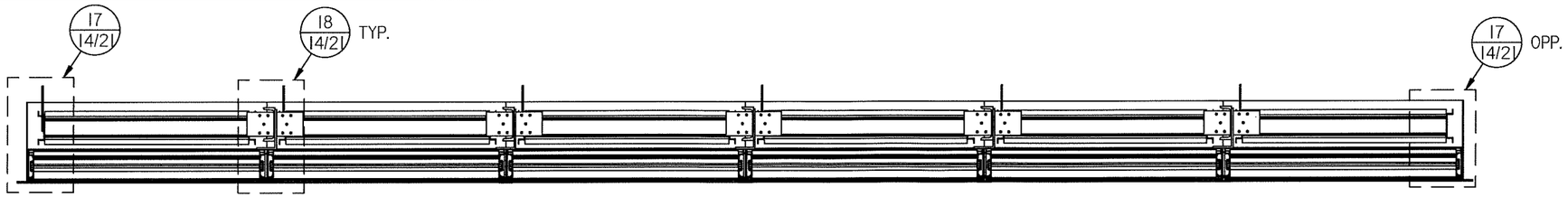

HORIZONTAL CROSS SECTION

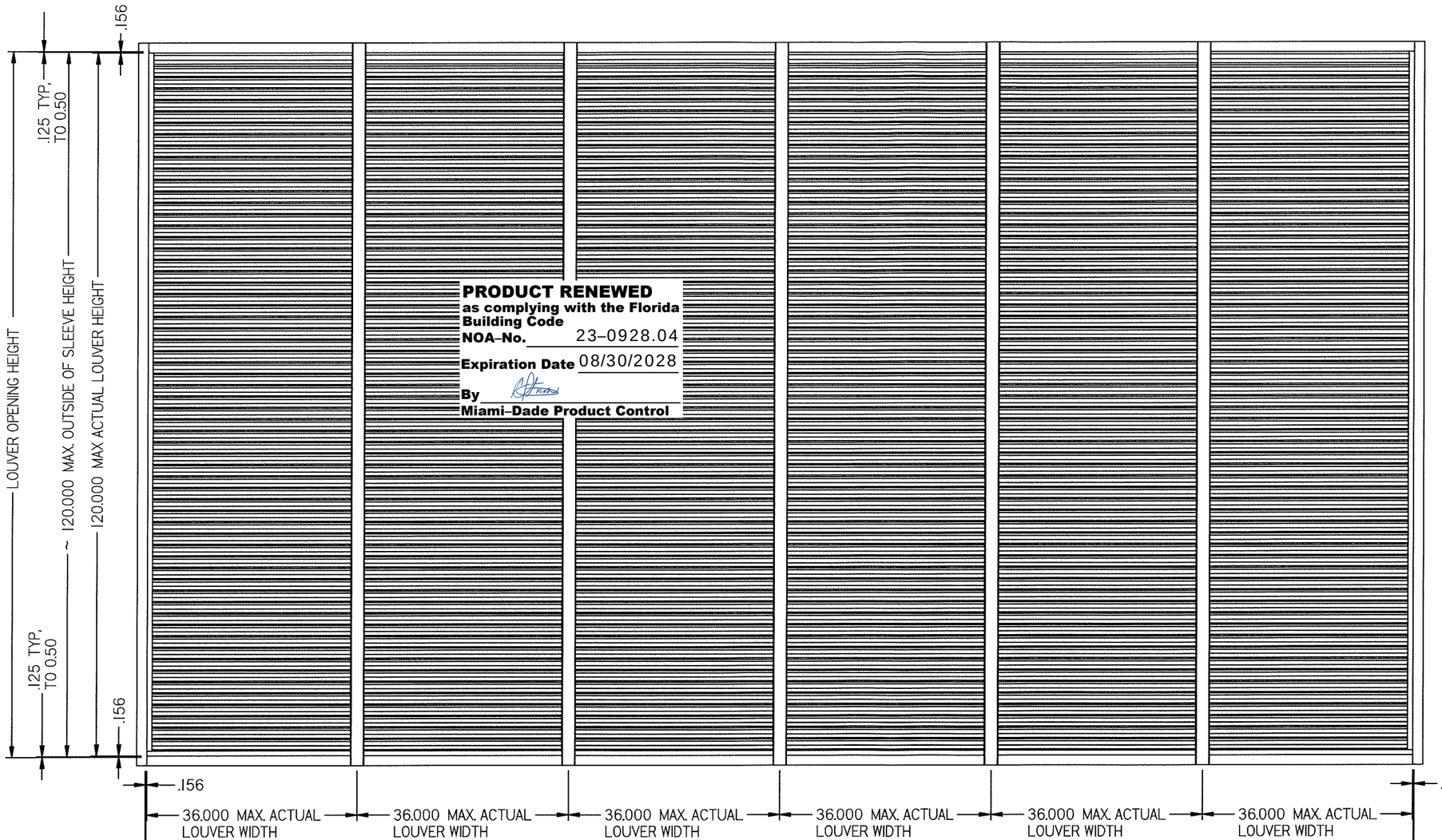

ELEVATION

PRODUCT RENEWED
as complying with the Florida Building Code
NOA-No. 23-0928.04
Expiration Date 08/30/2028
By
Miami-Dade Product Control

PRODUCT REVISED
as complying with the Florida Building Code
NOA-No. 21-0825.05
Expiration Date: 08/30/2023
By: Manuel Perez
Miami-Dade Product Control

PRODUCT REVISED
as complying with the Florida Building Code
Acceptance No. 18-1217.03
Expiration Date 08/30/2023
By Ishaq I. Chunda
Miami-Dade Product Control

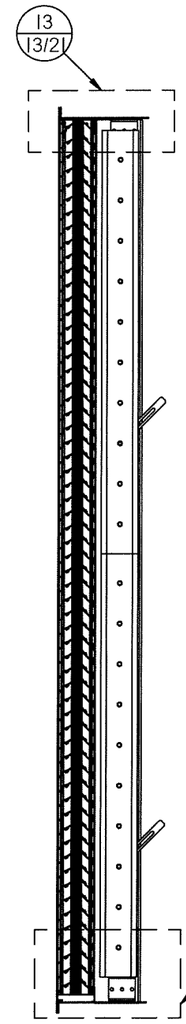

VERTICAL CROSS SECTION

N:\Drawing\LOUVERS\AMCA\1605WDF\1605WDM\1605WDM 216 X 120 FL Sleeve - SA.dft

DWN BY: fcortinas
CHK BY: MAstourian
DATE: 9/10/2018
SCALE: NTS
SHEET: 4 OF 21
REV -
DWG NO: 1605WDM

safe-AIR DOWCO®
NI ILLINOIS, LLC.
1855 SOUTH 54TH AVE. CICERO, IL 60804
Tel. 708-652-9100 Fax 708-652-9100

TITLE: 1605WDM / DAMPER FLANGE FRAME SLEEVE MOUNT

WAYNE K. HELMILA
LICENSE
No. 59092
STATE OF FLORIDA
PROFESSIONAL ENGINEER
02/19/2019

COA: 9090

RICE ENGINEERING
105 School Creek Trail
Luxemburg, WI 54217
Phone: (920) 617-1042
Fax: (920) 617-1100
www.rice-inc.com

Florida Firm No: F-01000005061
Certificate of Authorization: #9090
Wayne K. Helmila
Registration No: 59092

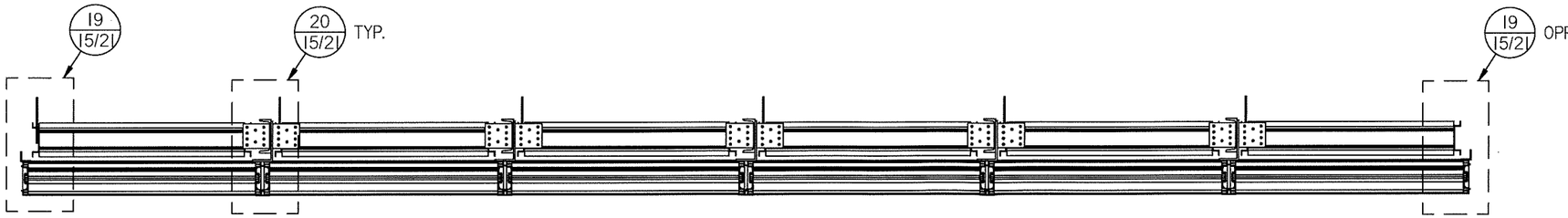

HORIZONTAL CROSS SECTION

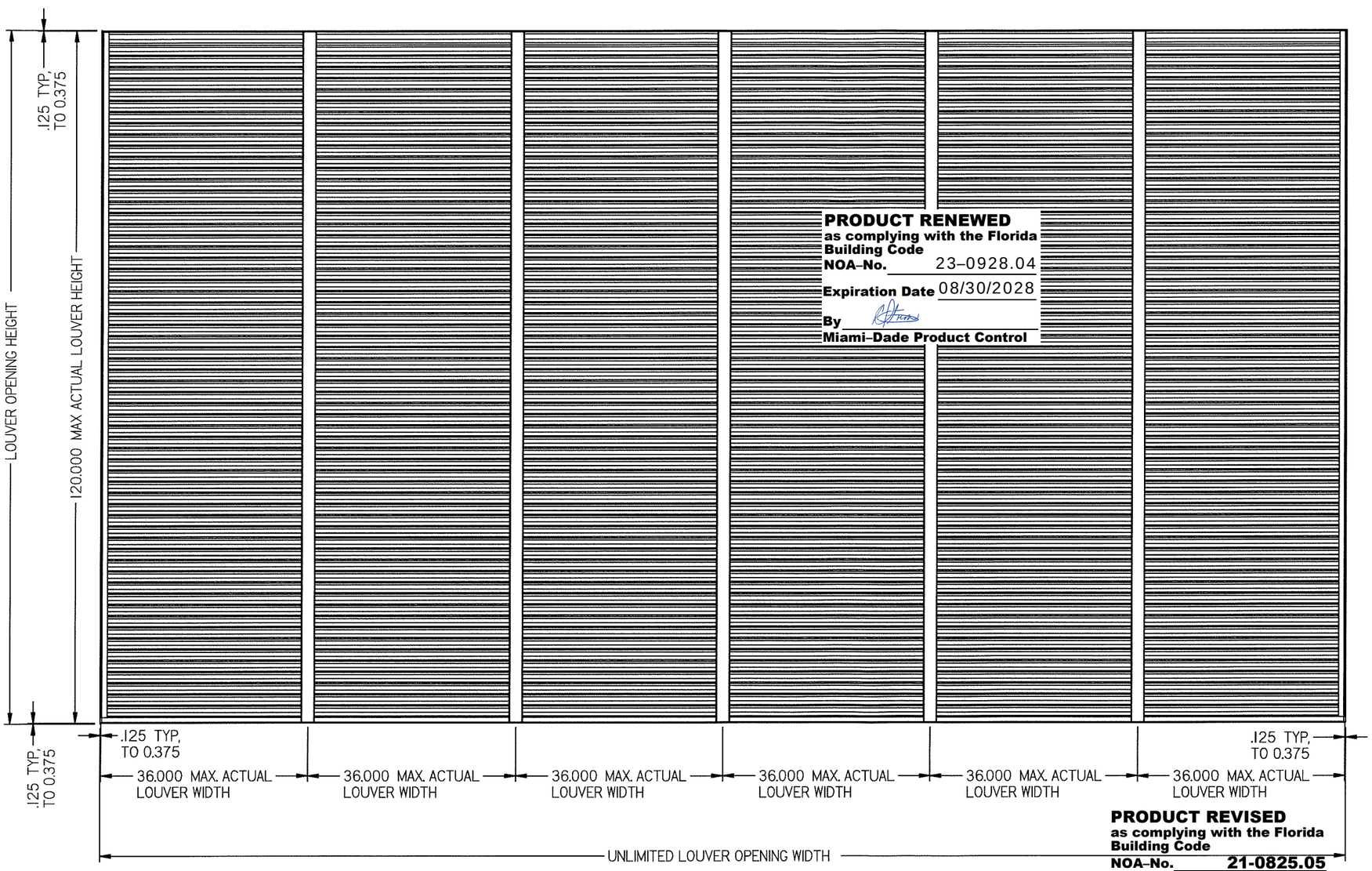

ELEVATION

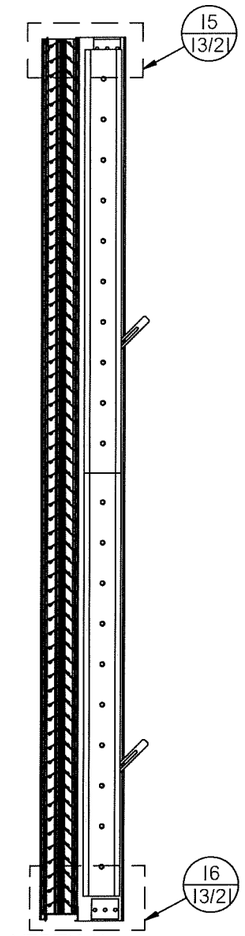

VERTICAL
CROSS SECTION

PRODUCT RENEWED
as complying with the Florida Building Code
NOA-No. 23-0928.04
Expiration Date 08/30/2028
By
Miami-Dade Product Control

PRODUCT REVISED
as complying with the Florida Building Code
NOA-No. 21-0825.05
Expiration Date: 08/30/2023
By: Manuel Perez
Miami-Dade Product Control

PRODUCT REVISED
as complying with the Florida Building Code
Acceptance No 18-1217.03
Expiration Date 8/30/2023
Miami-Dade Product Control

N:\Drawing\LOUVERS\AMCA\1605WDF\1605WDM\1605WDM 216 X 120 FL Sleeve - SA.dft

DWN BY: fcortinas
CHK BY: MAstourian
DATE: 9/10/2018
SCALE: NTS
SHEET: 5 OF 21
REV -
DWG NO: 1605WDM

safe-AIR DOWCO®
NI ILLINOIS, LLC.
1855 SOUTH 54TH AVE. CICERO, IL 60804
Tel. 708-652-9100 Fax 708-652-9100

TITLE:
1605WDM / DAMPER
CONTINOUS ANGLE MOUNT

WAYNE K. HELMILA
LICENSE
No. 59092
STATE OF FLORIDA
PROFESSIONAL ENGINEER
02/19/2019

COA: 9090

RICE
ENGINEERING
105 School Creek Trail
Luxemburg, WI 54217
Phone: (920) 617-1042
Fax: (920) 617-1100
www.rice-inc.com

Florida Firm No: F-01000005061
Certificate of Authorization: #9090
Wayne K. Helmila
Registration No: 59092

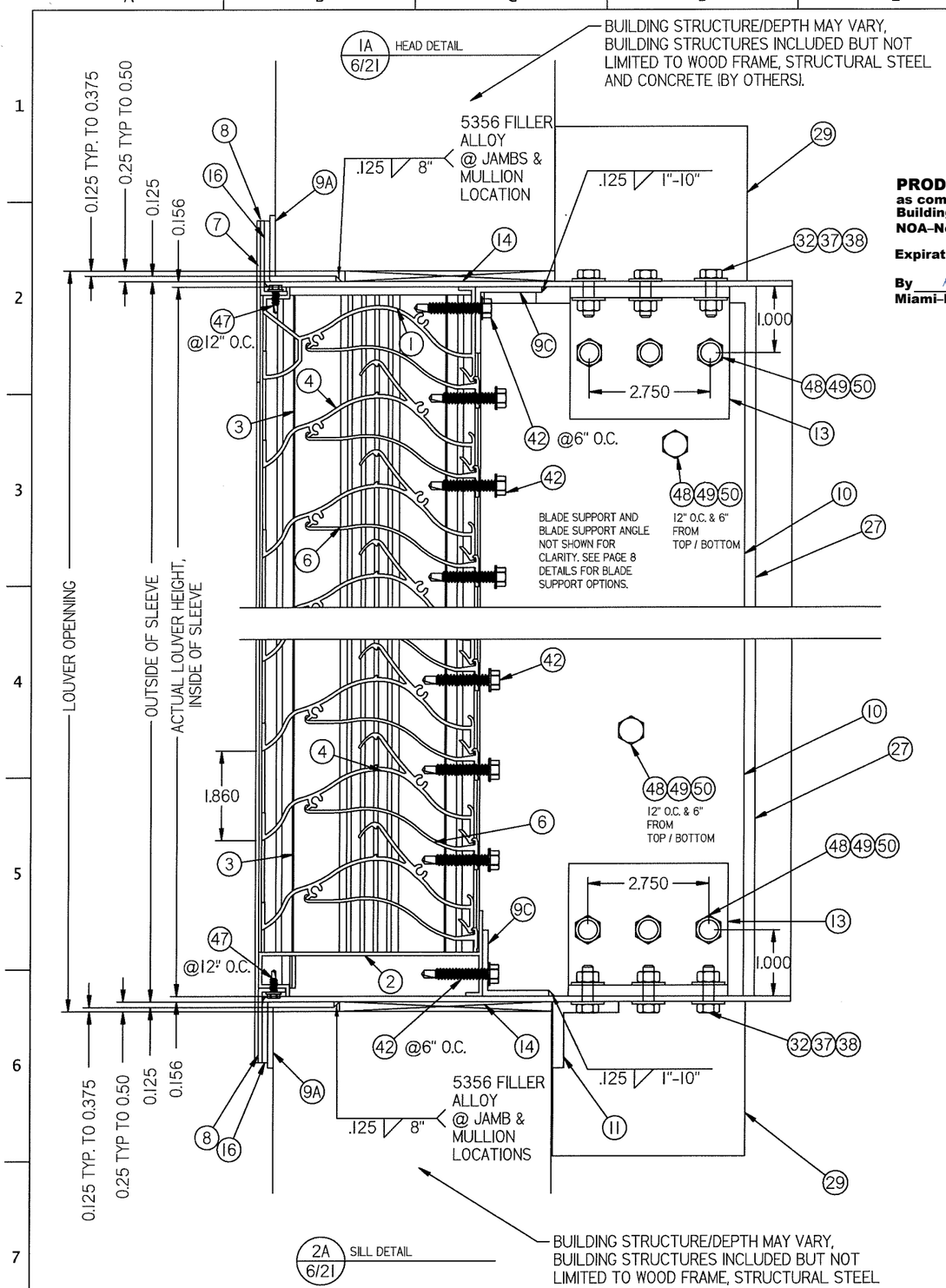

PRODUCT REVISED
as complying with the Florida Building Code
NOA-No. 21-0825.05
Expiration Date: 08/30/2023
By: Manuel Perez
Miami-Dade Product Control

PRODUCT RENEWED
as complying with the Florida Building Code
NOA-No. 23-0928.04
Expiration Date 08/30/2028
By
Miami-Dade Product Control

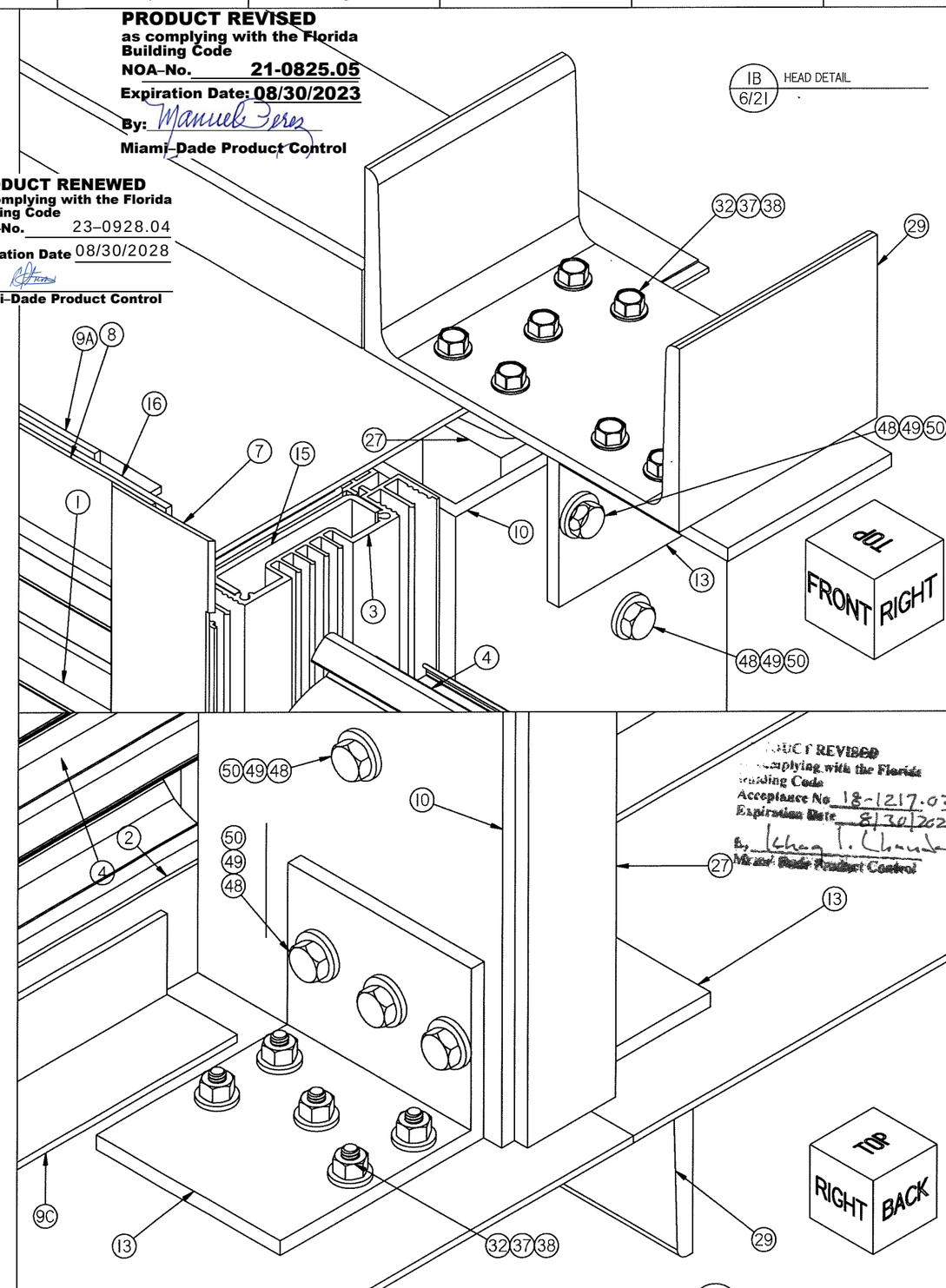

PRODUCT REVISED
as complying with the Florida Building Code
Acceptance No. 18-1217.03
Expiration Date 8/30/2023
By
Miami-Dade Product Control

DWN BY: fcortinas	CHK BY: MAstourian
DATE: 9/10/2018	SCALE: NTS
SHEET: 6 OF 21	REV -
DWG NO: 1605WDM	

safe-air DOWCO®
NI ILLINOIS, LLC.
1855 SOUTH 54TH AVE. CICERO, IL 60804
Tel. 708-652-9100 Fax 708-652-9100

TITLE: 1605WDM LOUVER FLANGE FRAME SLEEVE MOUNT HEAD & SILL DETAIL

WAYNE K. HELMILA
LICENSE
No. 59092
STATE OF FLORIDA
PROFESSIONAL ENGINEER
02/19/2019

COA: 9090

RICE ENGINEERING
105 School Creek Trail
Luxemburg, WI 54217
Phone: (920) 617-1042
Fax: (920) 617-1100
www.rice-inc.com

Florida Firm No: F-01000005061
Certificate of Authorization: #9090
Wayne K. Helmila
Registration No: 59092

N:\Drawing\LOUVERS\AMCA\1605WDF\1605WDM\1605WDM 216 X 120 FL Sleeve - SA.dft

MULLION ANGLE DIRECT MOUNT (SHOWN HERE AT HEAD) IS FOR SUBSTRATES WHERE MINIMUM FASTENER EDGE DISTANCE CAN BE ACHIEVED BY USE OF HOLES IN THE MULLION END CAP. DETAIL IS TYPICAL FOR BOTH HEAD AND SILL CONDITIONS WHEN APPLICABLE.

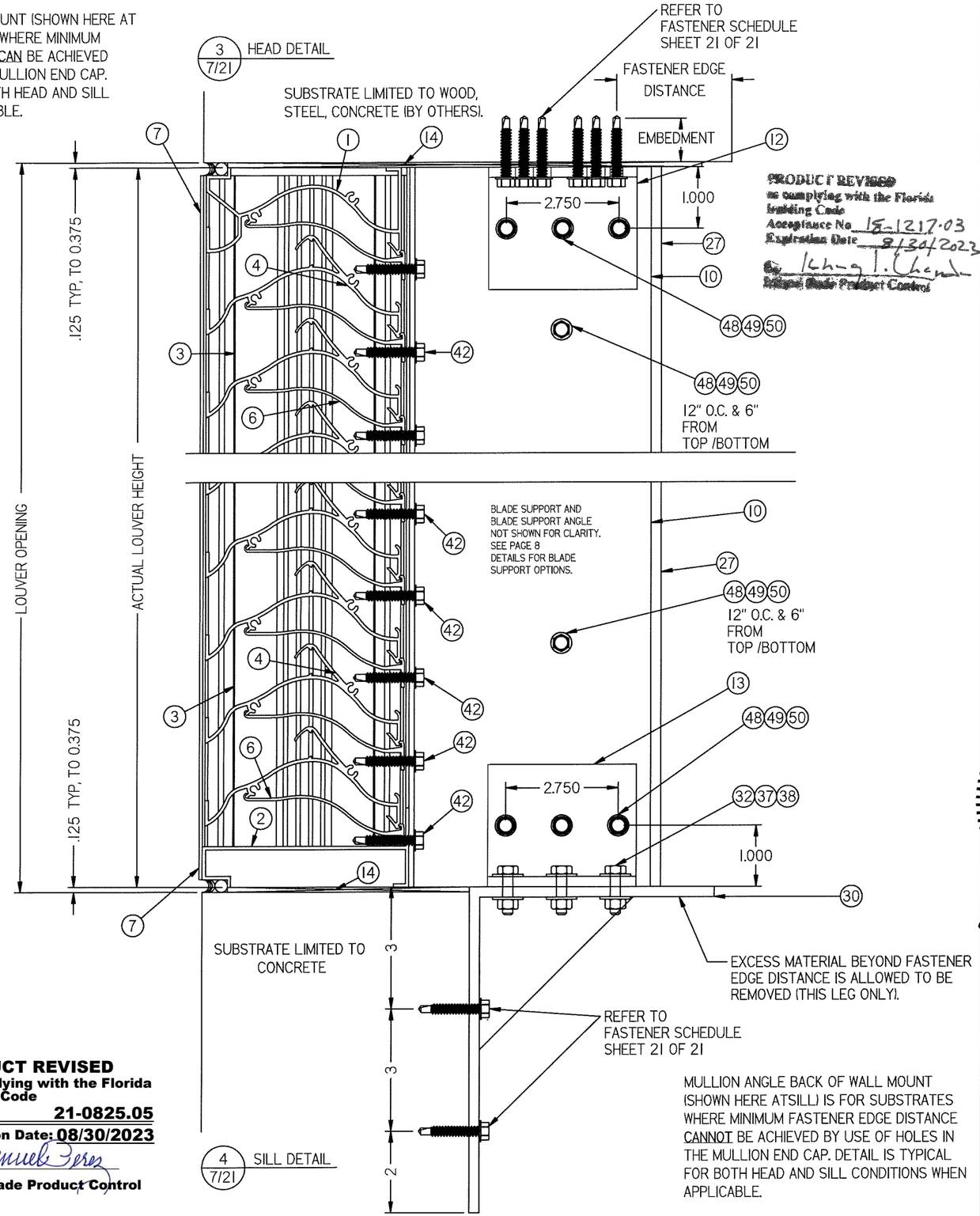

MULLION ANGLE BACK OF WALL MOUNT (SHOWN HERE ATSILL) IS FOR SUBSTRATES WHERE MINIMUM FASTENER EDGE DISTANCE CANNOT BE ACHIEVED BY USE OF HOLES IN THE MULLION END CAP. DETAIL IS TYPICAL FOR BOTH HEAD AND SILL CONDITIONS WHEN APPLICABLE.

PRODUCT RENEWED
as complying with the Florida Building Code
NOA-No. 23-0928.04
Expiration Date 08/30/2028
By
Miami-Dade Product Control

PRODUCT REVISED
as complying with the Florida Building Code
NOA-No. 21-0825.05
Expiration Date: 08/30/2023
By: Manuel Perez
Miami-Dade Product Control

PRODUCT REVISED
as complying with the Florida Building Code
Acceptance No. 15-1217.03
Expiration Date 8/30/2023
By
Miami-Dade Product Control

N:\Drawing\LOUVERS\AMCA\1605WDF\1605WDM\1605WDM 216 X 120 FL Sleeve - SA.dft

DWN BY: fcortinas
CHK BY: MAstourian
DATE: 9/10/2018
SCALE: NTS
SHEET: 7 OF 21
REV -
DWG NO: 1605WDM

safe-AIR DOWCO®
NI ILLINOIS, LLC.
1855 SOUTH 54TH AVE. CICERO, IL 60804
Tel. 708-652-9100 Fax 708-652-9100

TITLE: 1605WDM LOUVER MULLION ANGLE MOUNT HEAD & SILL DETAILS

WAYNE K. HELMILA
LICENSE
No. 59092
STATE OF FLORIDA
PROFESSIONAL ENGINEER
02/19/2019

COA: 9090
RICE ENGINEERING
105 School Creek Trail
Luxemburg, WI 54217
Phone: (920) 617-1042
Fax: (920) 617-1100
www.rice-inc.com
Florida Firm No: F-01000005061
Certificate of Authorization: #9090
Wayne K. Helmila
Registration No: 59092

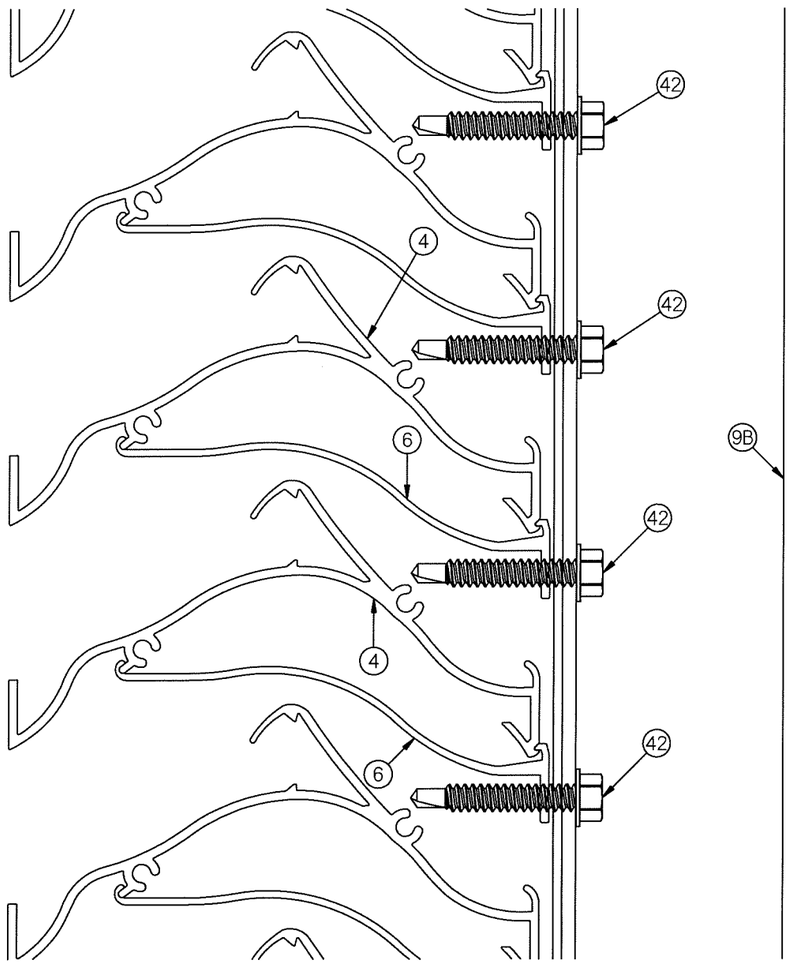

5 / 8/21 BLADE SUPPORT DETAIL

PRODUCT RENEWED
as complying with the Florida Building Code
NOA-No. 23-0928.04
Expiration Date 08/30/2028
By
Miami-Dade Product Control

NOTE: THE BLADE SUPPORT ANGLE (ITEM 10 IS NOT SHOWN IN THE DETAILS IN ORDER TO IMPROVE CLARITY. THE BLADE SUPPORT ANGLE IS ATTACHED TO THE BLADE SUPPORT BRACE (ITEM 6).
BLADE SUPPORT BRACE6 (SHOWN) IS ANY OF THE DRAWINGS FOR DETAIL 6.

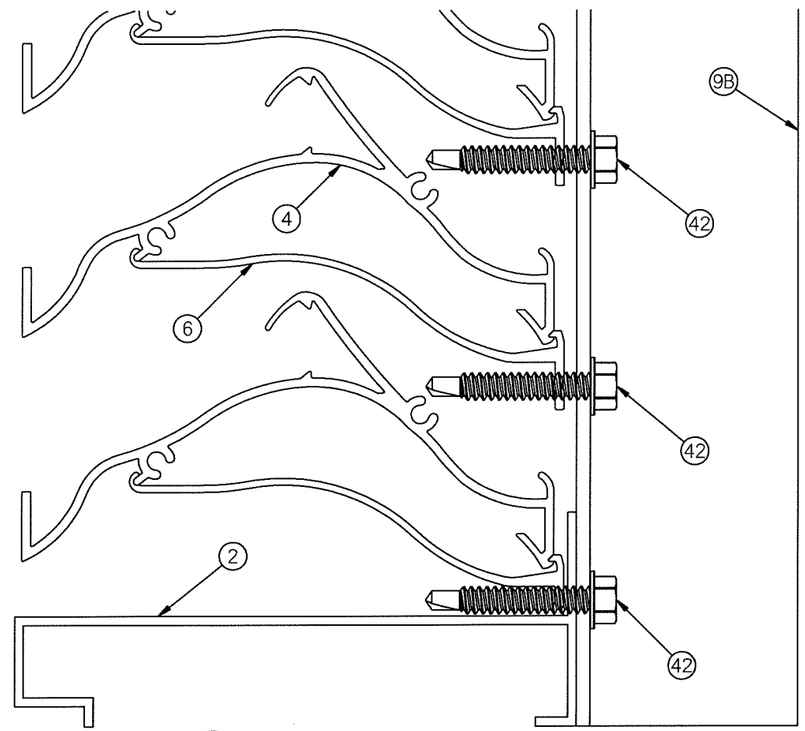

6 / 8/21 BOTTOM BLADE SUPPORT DETAIL

PRODUCT REVISED
as complying with the Florida Building Code
NOA-No. 21-0825.05
Expiration Date: 08/30/2023
By:
Miami-Dade Product Control

PRODUCT REVISED
as complying with the Florida Building Code
Acceptance No 18-1217.03
Expiration Date 8/30/2023
By
Miami-Dade Product Control

DWN BY: fcortinas | CHK BY: MAstourian
DATE: 9/10/2018 | SCALE: NTS
SHEET: 8 OF 21
DWG NO: 1605WDM | REV -

SAFE-AIR DOWCO®
NI ILLINOIS, LLC.
1855 SOUTH 54TH AVE. CICERO, IL 60804
Tel. 708-652-9100 Fax 708-652-9100

TITLE: 1605WDM LOUVER BLADE SUPPORT DETAIL

WAYNE K. HELMILA
LICENSE
No. 59092
STATE OF FLORIDA
PROFESSIONAL ENGINEER
02/19/2019

COA: 9090

RICE ENGINEERING
105 School Creek Trail
Luxemburg, WI 54217
Phone: (920) 617-1042
Fax: (920) 617-1100
www.rice-inc.com

Florida Firm No: F-01000005061
Certificate of Authorization: #9090
Wayne K. Helmila
Registration No: 59092

N:\Drawing\LOUVERS\AMCA\1605WDF\1605WDM\1605WDM 216 X 120 FL Sleeve - SA.dft

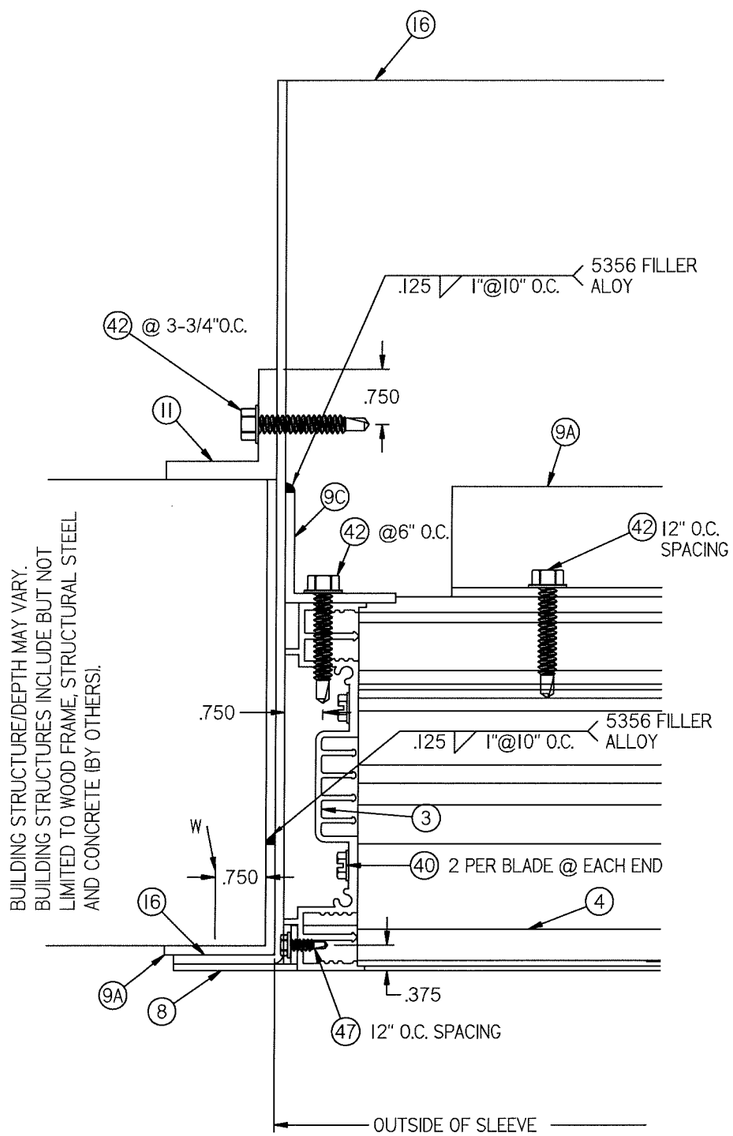

7 / 9/21 JAMB DETAIL

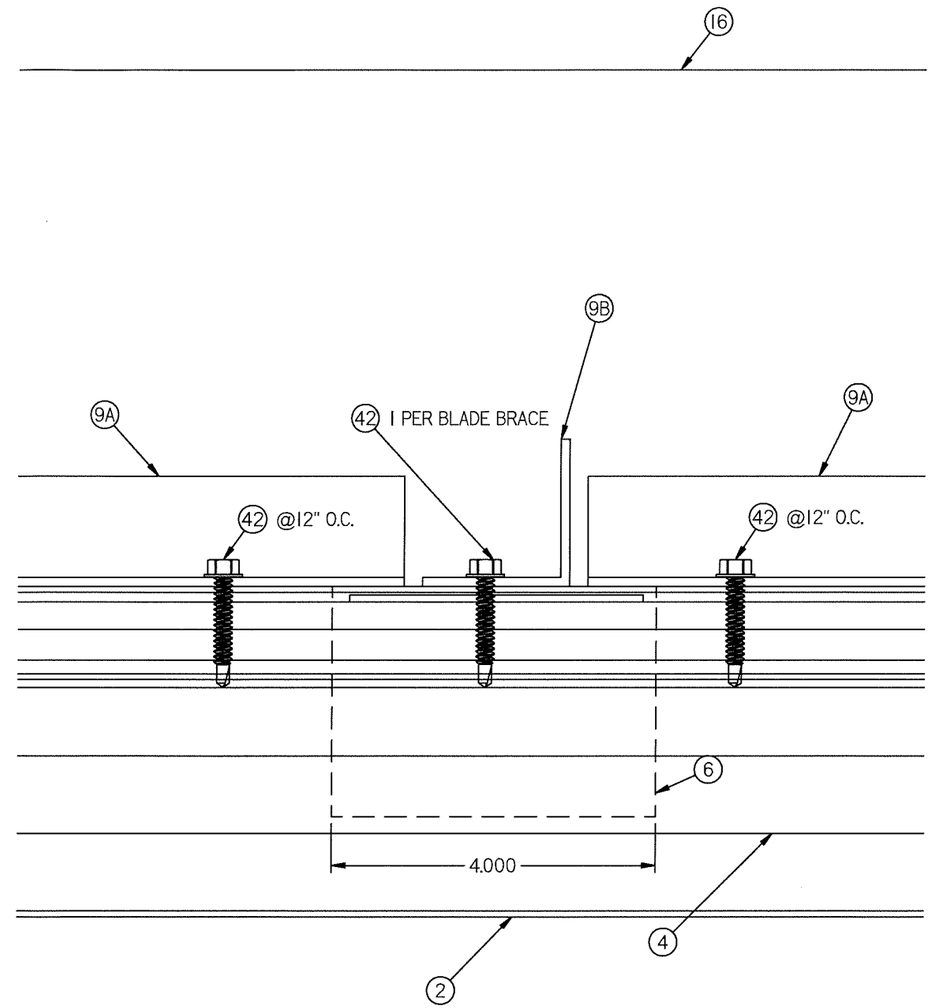

8 / 9/21 SUPPORT DETAIL

PRODUCT RENEWED
as complying with the Florida Building Code
NOA-No. 23-0928.04
Expiration Date 08/30/2028
By
Miami-Dade Product Control

PRODUCT REVISED
as complying with the Florida Building Code
NOA-No. 21-0825.05
Expiration Date: 08/30/2023
By: Manuel Perez
Miami-Dade Product Control

PRODUCT REVISED
as complying with the Florida building Code
Acceptance No. 18-1217.03
Expiration Date 8/30/2023
By
Miami-Dade Product Control

DWN BY: fcortinas
CHK BY: MAstourian
DATE: 9/10/2018
SCALE: NTS
SHEET: 9 OF 21
REV -
DWG NO: 1605WDM

safe-air DOWCO®
NI ILLINOIS, LLC.
1855 SOUTH 54TH AVE. CICERO, IL 60804
Tel. 708-652-9100 Fax 708-652-9100

TITLE: 1605WDM LOUVER
FLANGE FRAME SLEEVE MOUNT
JAMB DETAILS

WAYNE K. HELMILA
LICENSE
No. 59092
STATE OF FLORIDA
PROFESSIONAL ENGINEER
02/19/2019

COA: 9090

RICE ENGINEERING
105 School Creek Trail
Luxemburg, WI 54217
Phone: (920) 617-1042
Fax: (920) 617-1100
www.rice-inc.com

Florida Firm No: F-01000005061
Certificate of Authorization: #9090
Wayne K. Helmila
Registration No: 59092

N:\Drawing\LOUVERS\AMCA\1605WDF\1605WDM\1605WDM 216 X 120 FL Sleeve - SA.dft

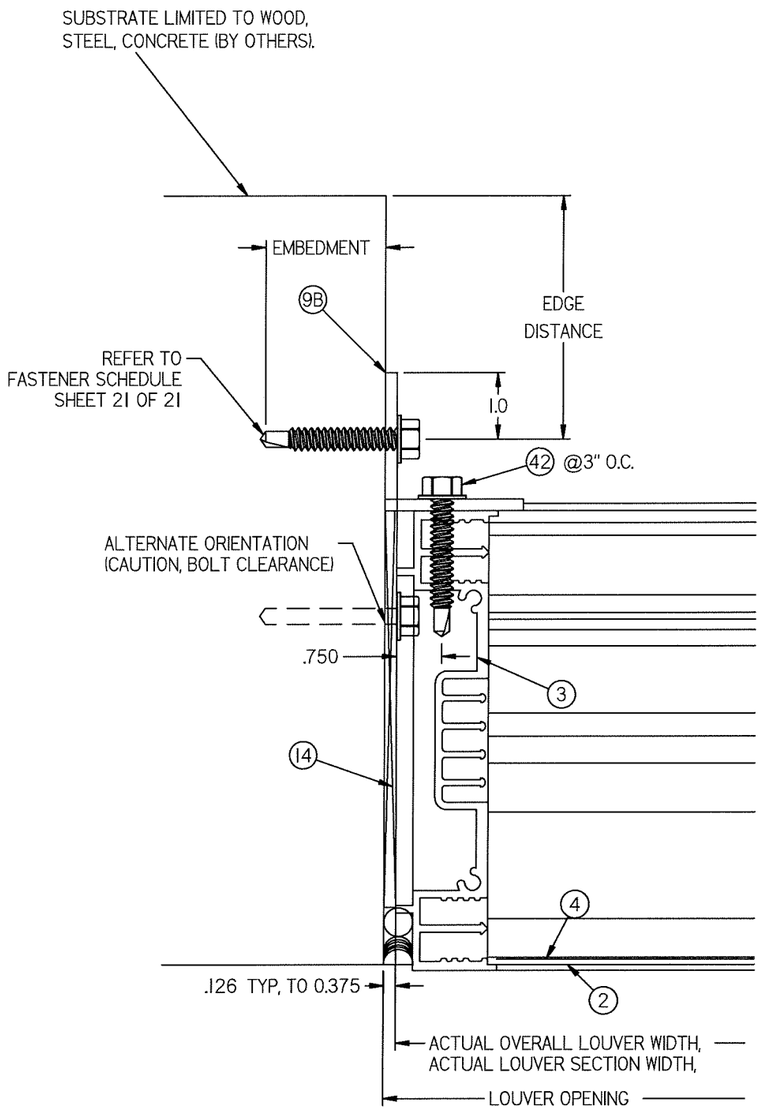

9 / 10/21 JAMB DETAIL

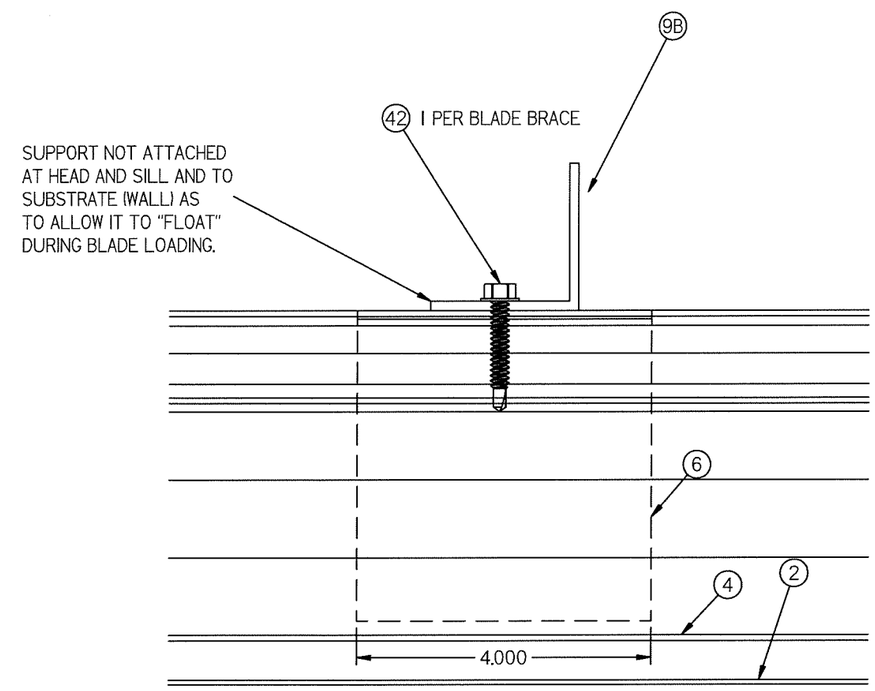

10 / 10/21 SUPPORT DETAIL

PRODUCT RENEWED
as complying with the Florida Building Code
NOA-No. 23-0928.04
Expiration Date 08/30/2028
By
Miami-Dade Product Control

PRODUCT REVISED
as complying with the Florida Building Code
NOA-No. 21-0825.05
Expiration Date: 08/30/2023
By: Manuel Perez
Miami-Dade Product Control

PRODUCT REVISED
as complying with the Florida Building Code
Acceptance No 18-1217.03
Expiration Date 8/31/2023
By
Miami Dade Product Control

DWN BY: fcortinas
CHK BY: MAstourian
DATE: 9/10/2018
SCALE: NTS
SHEET: 10 OF 21
REV -
DWG NO: 1605WDM

safe-air DOWCO®
NI ILLINOIS, LLC.
1855 SOUTH 54TH AVE. CICERO, IL 60804
Tel. 708-652-9100 Fax 708-652-9100

TITLE: 1605WDM LOUVER COUNTINOUS ANGLE MOUNT JAMB DETAIL

WAYNE K. HELMILA
LICENSE
No. 59092
STATE OF FLORIDA
PROFESSIONAL ENGINEER
02/19/2019

COA: 9090

RICE ENGINEERING
105 School Creek Trail
Luxemburg, WI 54217
Phone: (920) 617-1042
Fax: (920) 617-1100
www.rice-inc.com

Florida Firm No: F-01000005061
Certificate of Authorization: #9090
Wayne K. Helmila
Registration No: 59092

N:\Drawing\LOUVERS\AMCA\1605WDF\1605WDM\1605WDM 216 X 120 FL Sleeve - SA.dft

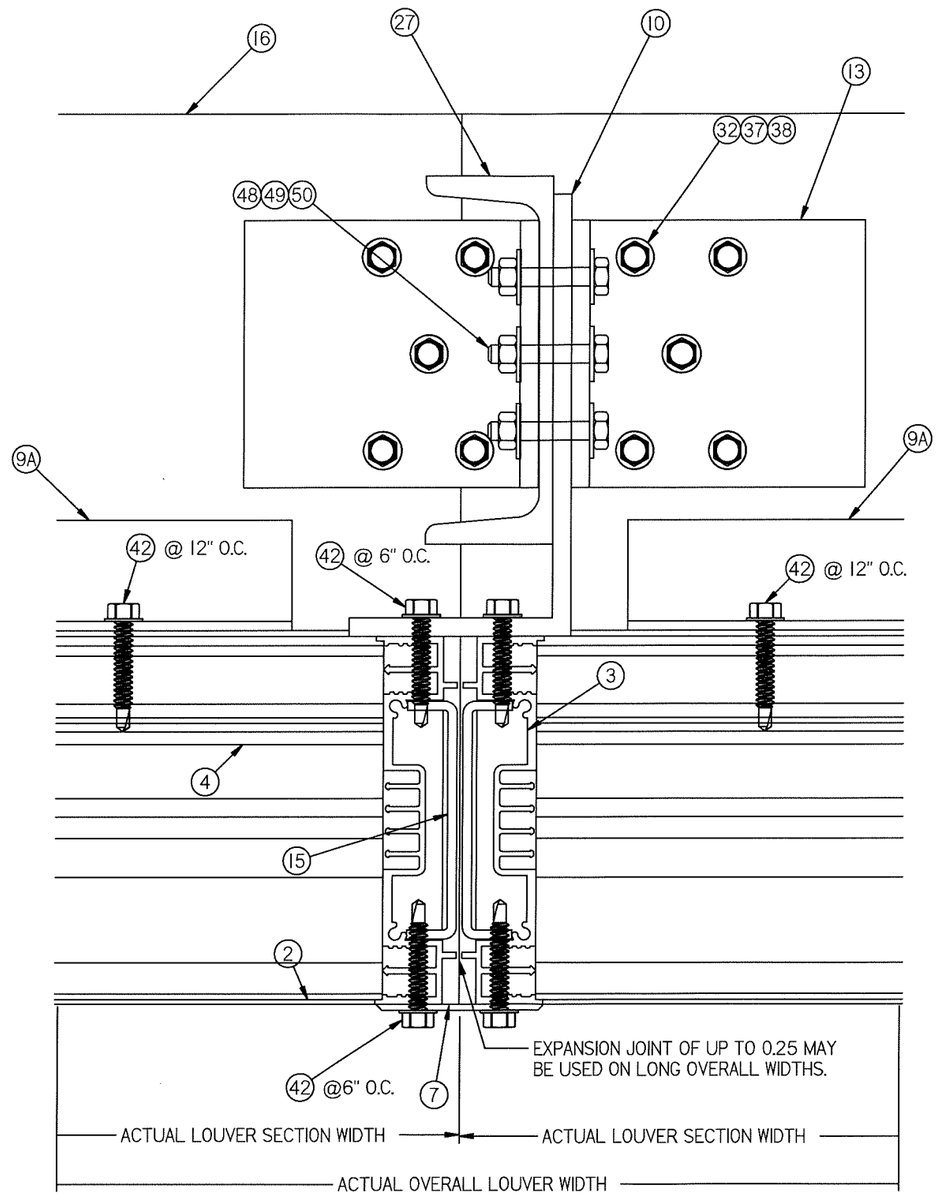

11 / 11/21 MULLION DETAIL

PRODUCT RENEWED
as complying with the Florida Building Code
NOA-No. 23-0928.04
Expiration Date 08/30/2028
By
Miami-Dade Product Control

PRODUCT REVISED
as complying with the Florida Building Code
NOA-No. **21-0825.05**
Expiration Date: 08/30/2023
By: Manuel Perez
Miami-Dade Product Control

PRODUCT REVISED
as complying with the Florida Building Code
Acceptance No. 18-1217.03
Expiration Date 8/30/2023
By
Miami-Dade Product Control

DWN BY: fcortinas | CHK BY: MAstourian
DATE: 9/10/2018 | SCALE: NTS
SHEET: 11 OF 21
DWG NO: 1605WDM | REV -

safe-air DOWCO®
NI ILLINOIS, LLC.
1855 SOUTH 54TH AVE. CICERO, IL 60804
Tel. 708-652-9100 Fax 708-652-9100

TITLE: 1605WDM LOUVER FLANGE FRAME SLEEVE MOUNT MULLION DETAIL

WAYNE K. HELMILA
LICENSE
No. 59092
STATE OF FLORIDA
PROFESSIONAL ENGINEER
02/19/2019

COA: 9090

RICE ENGINEERING
105 School Creek Trail
Luxemburg, WI 54217
Phone: (920) 617-1042
Fax: (920) 617-1100
www.rice-inc.com

Florida Firm No: F-01000005061
Certificate of Authorization: #9090
Wayne K. Helmila
Registration No: 59092

N:\Drawing\LOUVERS\AMCA\1605WDF\1605WDM\1605WDM 216 X 120 FL Sleeve - SA.dft

PRODUCT RENEWED
as complying with the Florida Building Code
NOA-No. 23-0928.04
Expiration Date 08/30/2028
By
Miami-Dade Product Control

PRODUCT REVISED
as complying with the Florida Building Code
NOA-No. 21-0825.05
Expiration Date: 08/30/2023
By: Manuel Perez
Miami-Dade Product Control

PRODUCT REVISED
as complying with the Florida Building Code
Acceptance No. 18-1217.03
Expiration Date 8/30/2023
By: Ishing J. Chan
Miami-Dade Product Control

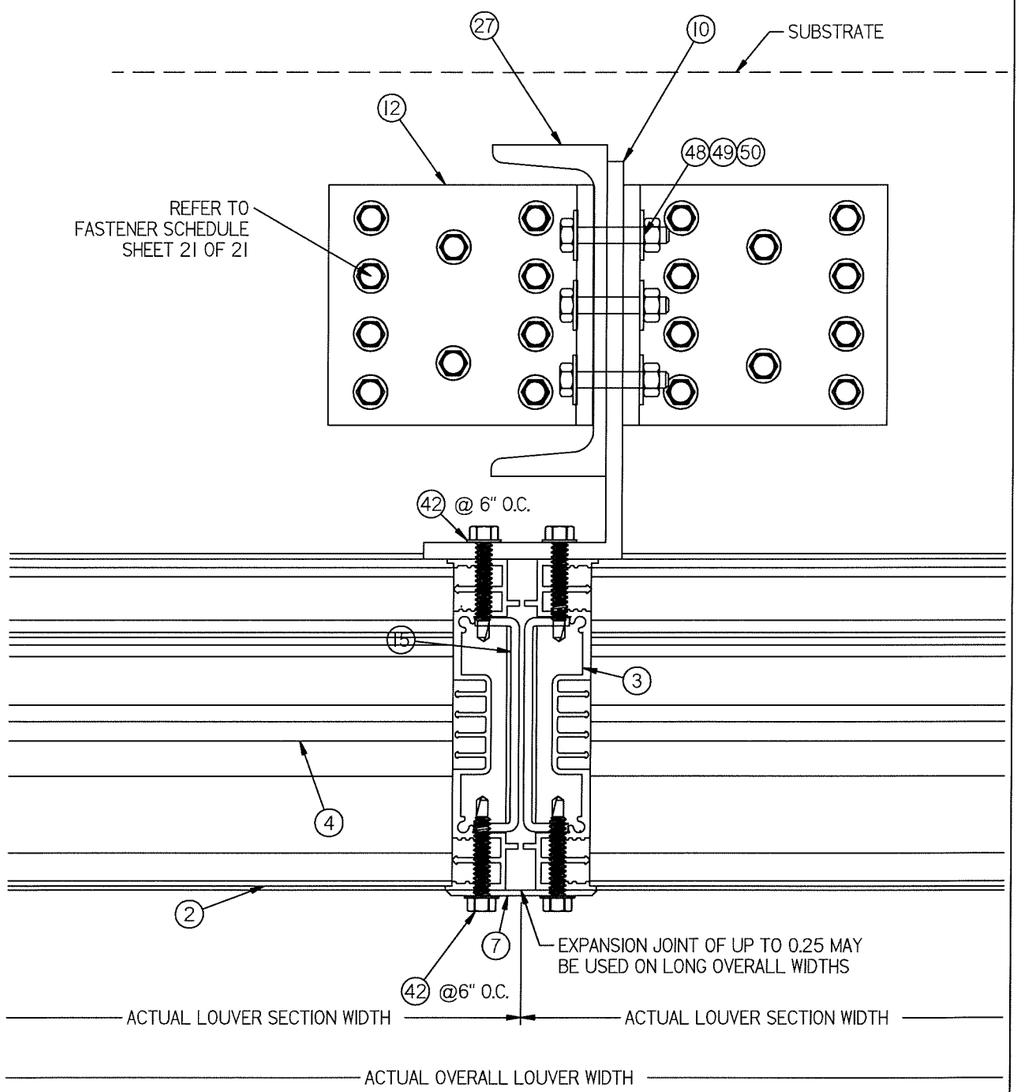

MULLION ANGLE DIRECT MOUNT (SHOWN HERE AT HEAD) IS FOR SUBSTATES WHERE MINIMUM FASTENER EDGE DISTANCE CAN BE ACHIEVED BY USE OF HOLES IN THE MULLION END CAP. DETAIL IS TYPICAL FOR BOTH HEAD AND SILL CONDITIONS WHEN APPLICABLE.

12A / 12/21 MULLION DETAIL

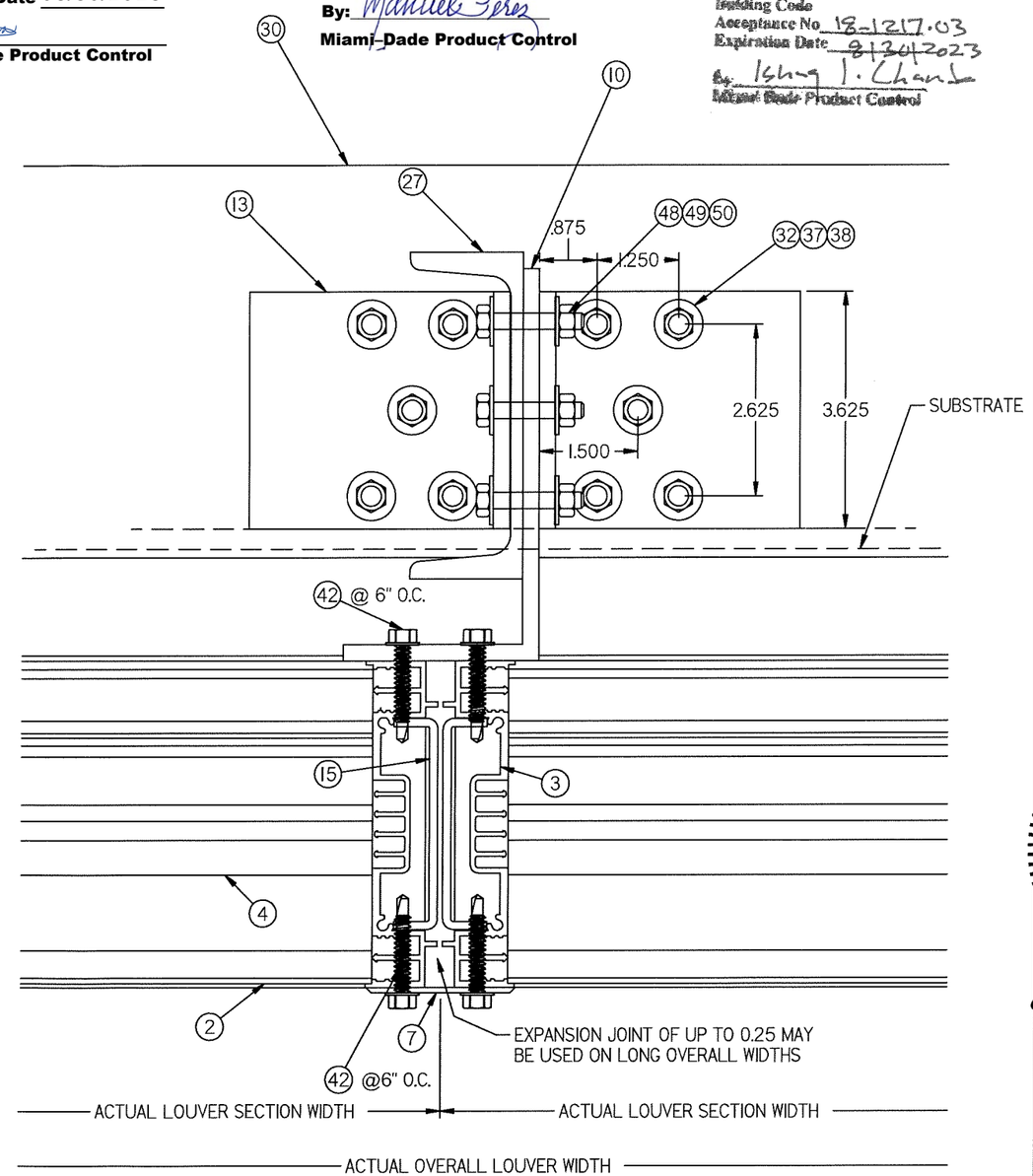

MULLION ANGLE BACK OF WALL MOUNT (SHOWN HERE AT SILL) IS FOR SUBSTRATES WHERE MINIMUM FASTENER EDGE DISTANCE CANNOT BE ACHIEVED BY USE OF HOLES IN THE MULLION END CAP. DETAIL IS TYPICAL FOR BOTH HEAD AND SILL CONDITIONS WHEN APPLICABLE.

12B / 12/21 MULLION DETAIL

N:\Drawing\LOUVERS\AMCA\1605WDF\1605WDM\1605WDM 216 X 120 FL Sleeve - SA.dft

DWN BY: fcortinas
CHK BY: MAstourian
DATE: 9/10/2018
SCALE: NTS
SHEET: 12 OF 21
REV -
DWG NO: 1605WDM

safe-AIR DOWCO®
1855 SOUTH 54TH AVE. CICERO, IL 60804
NI ILLINOIS, LLC.
Tel. 708-652-9100 Fax 708-652-9100

TITLE: 1605WDM LOUVER COUNTINOUS ANGLE MOUNT MULLION DETAIL

WAYNE K. HELMILA LICENSE No. 59092 STATE OF FLORIDA PROFESSIONAL ENGINEER
02/19/2019

COA: 9090

RICE ENGINEERING
105 School Creek Trail
Luxemburg, WI 54217
Phone: (920) 617-1042
Fax: (920) 617-1100
www.rice-inc.com

Florida Firm No: F-01000005061
Certificate of Authorization: #9090
Wayne K. Helmila
Registration No: 59092

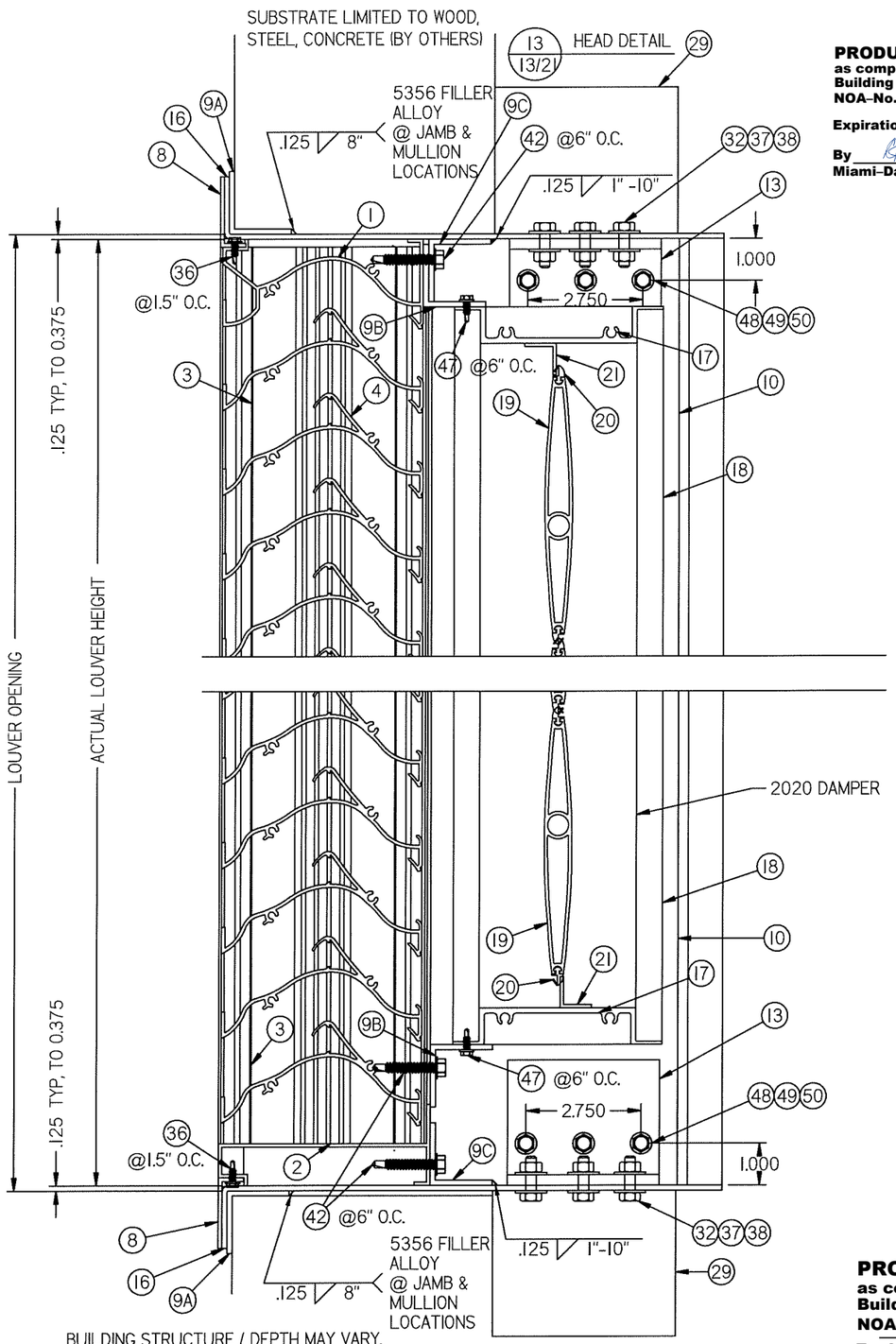

BUILDING STRUCTURE / DEPTH MAY VARY. BUILDING STRUCTURES INCLUDE BUT NOT LIMITED TO WOOD FRAME, STRUCTURAL STEEL, AND CONCRETE (BY OTHERS).

N:\Drawing\LOUVERS\AMCA\1605WDF\1605WDM\1605WDM 216 X 120 FL Sleeve - SA.dft

PRODUCT RENEWED
as complying with the Florida Building Code
NOA-No. 23-0928.04
Expiration Date 08/30/2028
By
Miami-Dade Product Control

PRODUCT REVISED
as complying with the Florida Building Code
NOA-No. 21-0825.05
Expiration Date: 08/30/2023
By: Manuel Perez
Miami-Dade Product Control

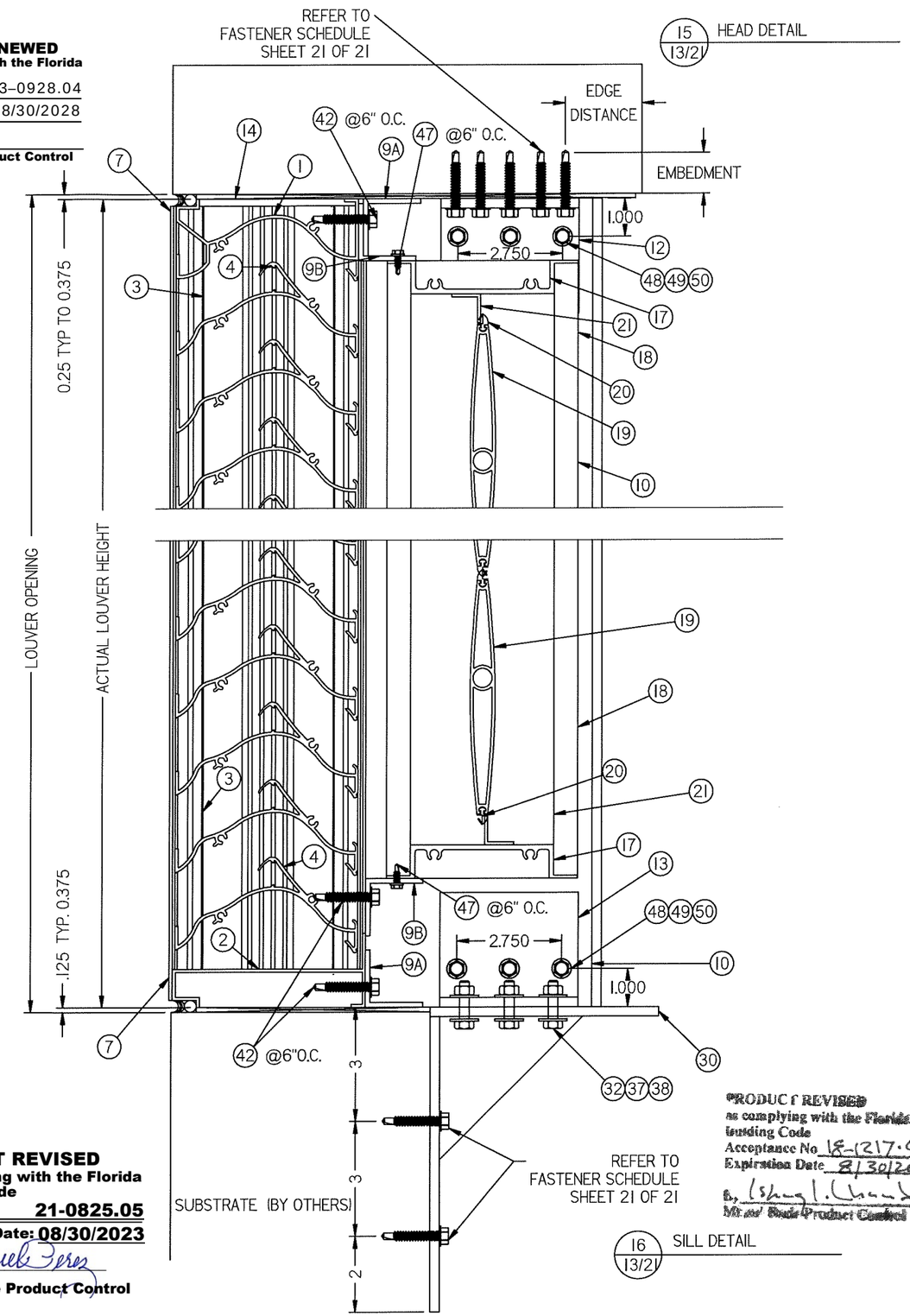

PRODUCT REVISED
as complying with the Florida Building Code
Acceptance No. 18-1217.03
Expiration Date 8/30/2023
By
Miami-Dade Product Control

DWN BY: fcortinas
DATE: 9/10/2018
CHK BY: MAstourian
SCALE: NTS
SHEET: 13 OF 21
REV -
DWG NO: 1605WDM

SafeAir DOWCO®
NI ILLINOIS, LLC.
1855 SOUTH 54TH AVE. CICERO, IL 60804
Tel. 708-652-9100 Fax 708-652-9100

TITLE: 1605WDM LOUVER / DAMPER FLANGE FRAME W/SLEEVE CONTINOUS ANGLE MOUNT HEAD & SILL DETAIL

WAYNE K. HELMILA
LICENSE
No. 59092
STATE OF FLORIDA
PROFESSIONAL ENGINEER
02/19/2019

COA: 9090

RICE ENGINEERING
105 School Creek Trail
Luxemburg, WI 54217
Phone: (920) 617-1042
Fax: (920) 617-1100
www.rice-inc.com

Florida Firm No: F-01000005061
Certificate of Authorization: #9090
Wayne K. Helmila
Registration No: 59092

PRODUCT RENEWED
as complying with the Florida Building Code
NOA-No. 23-0928.04
Expiration Date 08/30/2028
By
Miami-Dade Product Control

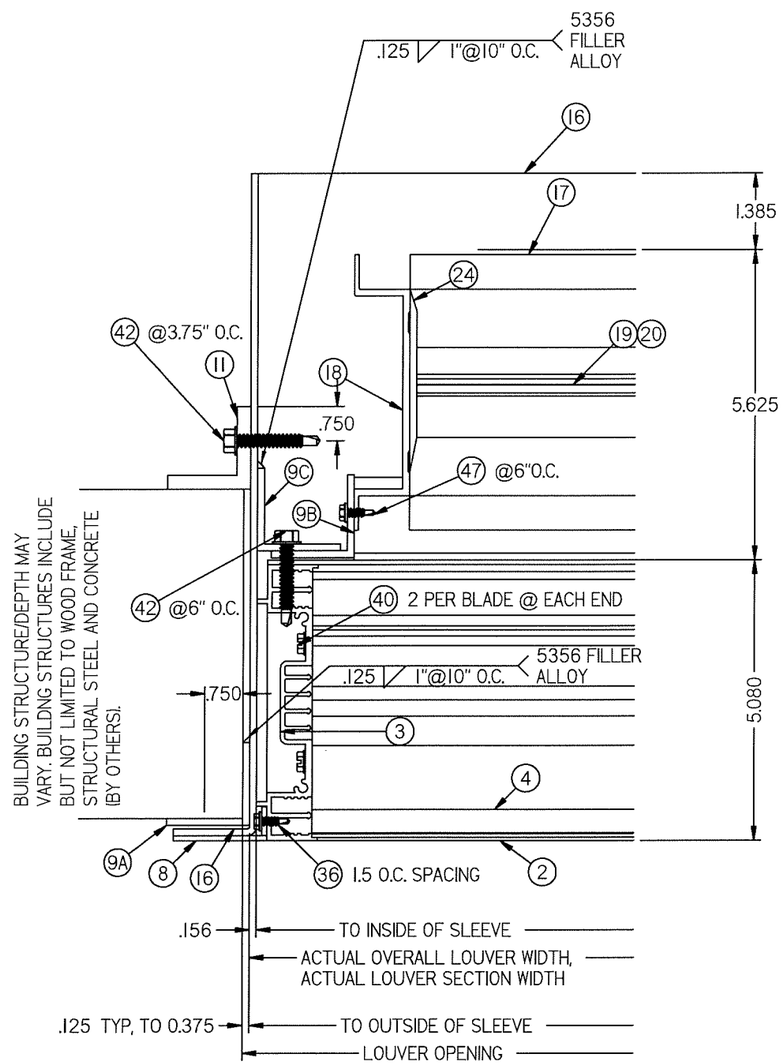

17 / 14/21 JAMB DETAIL

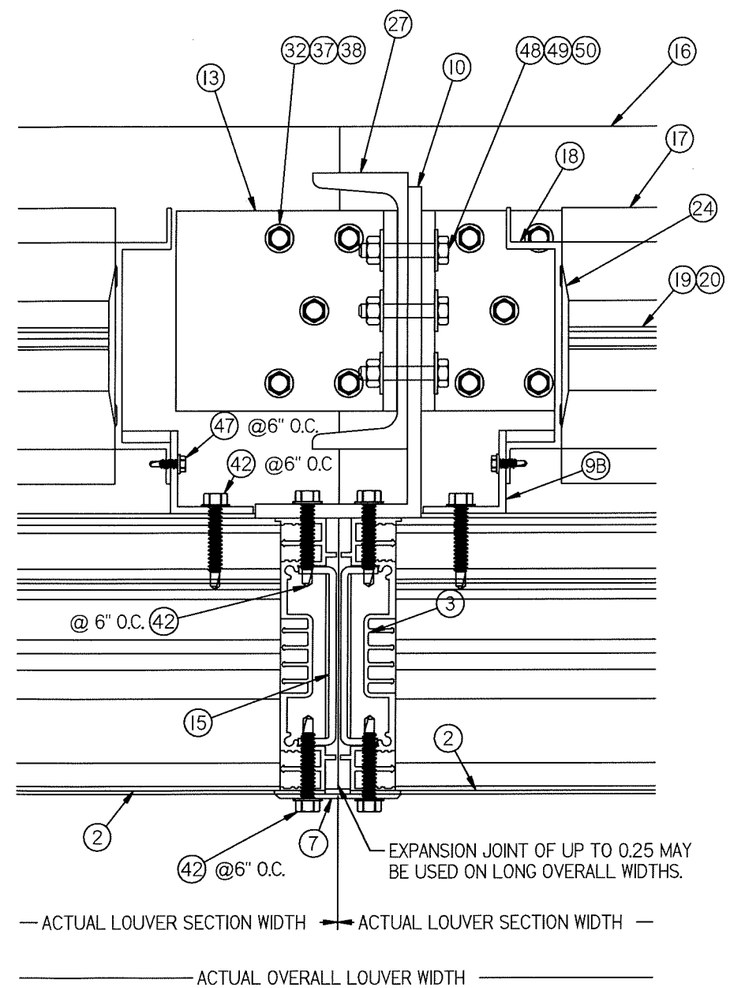

18 / 14/21 MULLION DETAIL

PRODUCT REVISED
as complying with the Florida Building Code
NOA-No. 21-0825.05
Expiration Date: 08/30/2023
By:
Miami-Dade Product Control

PRODUCT REVISED
as complying with the Florida Building Code
Acceptance No 18-1217.03
Expiration Date 8/30/2023
By
Miami-Dade Product Control

DWN BY: fcortinas
DATE: 9/10/2018
CHK BY: MAstourian
SCALE: NTS
SHEET: 14 OF 21
REV -
DWG NO: 1605WDM

SAFE-AIR DOWCO®
NI ILLINOIS, LLC.
1855 SOUTH 54TH AVE. CICERO, IL 60804
Tel. 708-652-9100 Fax 708-652-9100

TITLE:
1605WDM LOUVER / DAMPER
FLANGE FRAME SLEEVE MOUNT
JAMB AND MULLION DETAIL

WAYNE K. HELMILA
LICENSE
No. 59092
STATE OF FLORIDA
PROFESSIONAL ENGINEER
02/19/2019

COA: 9090

RICE ENGINEERING
105 School Creek Trail
Luxemburg, WI 54217
Phone: (920) 617-1042
Fax: (920) 617-1100
www.rice-inc.com
Florida Firm No: F-01000005061
Certificate of Authorization: #9090
Wayne K. Helmila
Registration No: 59092

N:\Drawing\LOUVERS\AMCA\1605WDF\1605WDM\1605WDM 216 X 120 FL Sleeve - SA.dft

PRODUCT RENEWED
as complying with the Florida Building Code
NOA-No. 23-0928.04
Expiration Date 08/30/2028
By
Miami-Dade Product Control

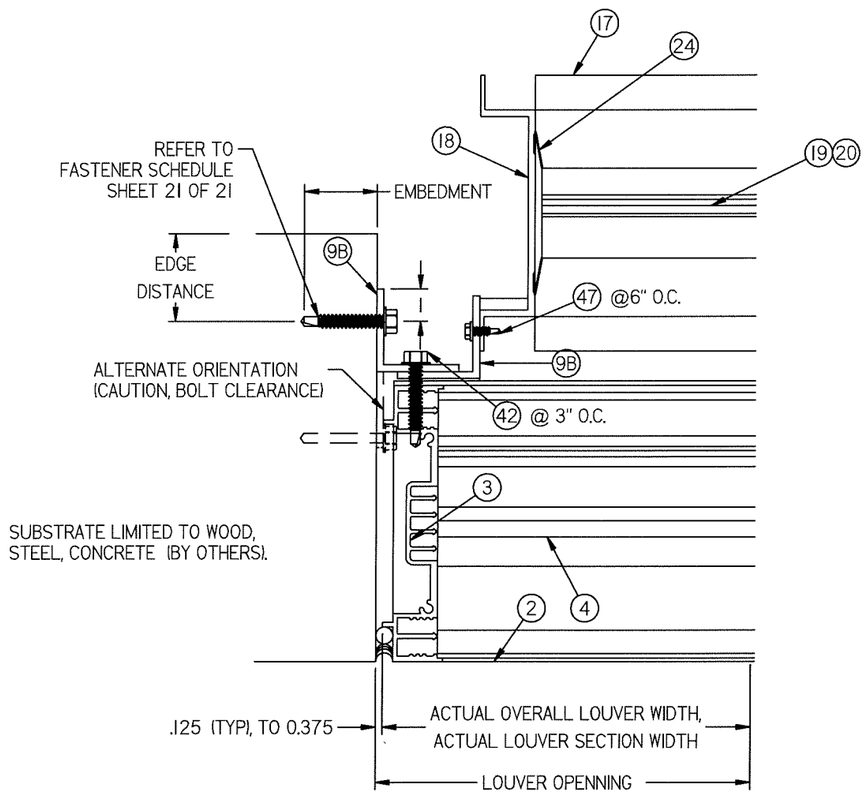

19 / 15/21 JAMB DETAIL

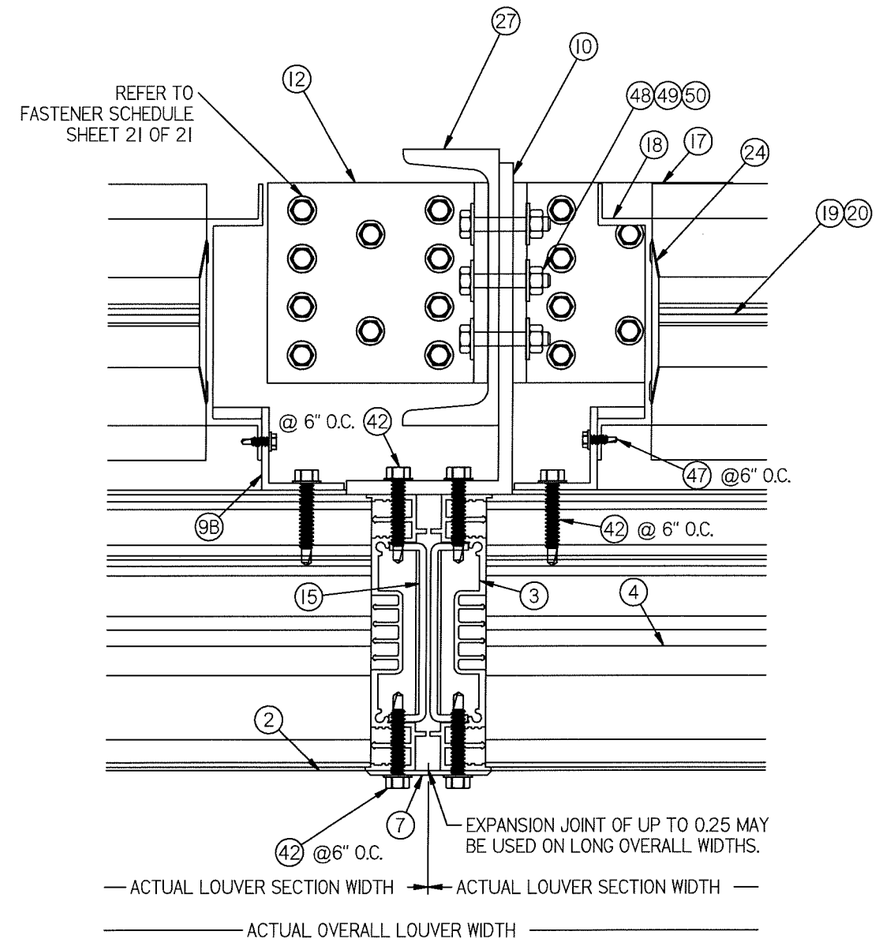

20 / 15/21 MULLION ANGLE DIRECT MOUNT DETAIL

PRODUCT REVISED
as complying with the Florida Building Code
NOA-No. 21-0825.05
Expiration Date: 08/30/2023
By:
Miami-Dade Product Control

PRODUCT REVISED
as complying with the Florida Building Code
Acceptance No 18-1217.03
Expiration Date 8/30/2023
By
Miami-Dade Product Control

N:\Drawing\LOUVERS\AMCA\1605WDF\1605WDM\1605WDM 216 X 120 FL Sleeve - SA.dft

DWN BY: fcortinas
DATE: 9/10/2018
CHK BY: MAstourian
SCALE: NTS
SHEET: 15 OF 21
DWG NO: 1605WDM
REV -

safe-air DOWCO®
1855 SOUTH 54TH AVE. CICERO, IL 60804
NI ILLINOIS, LLC.
Tel. 708-652-9100 Fax 708-652-9100

TITLE:
1605WDM LOUVER / DAMPER
CONTINUOUS ANGLE MOUNT
JAMB AND MULLION DETAIL

WAYNE K. HELMILA
LICENSE
No. 59092
STATE OF FLORIDA
PROFESSIONAL ENGINEER
02/19/2019

COA: 9090

RICE ENGINEERING
105 School Creek Trail
Luxemburg, WI 54217
Phone: (920) 617-1042
Fax: (920) 617-1100
www.rice-inc.com

Florida Firm No: F-01000005061
Certificate of Authorization: #9090
Wayne K. Helmila
Registration No: 59092

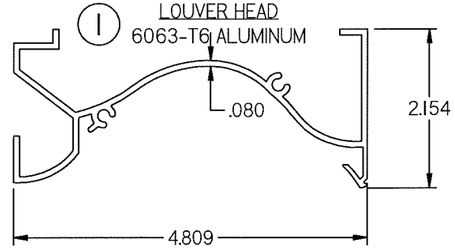

1 LOUVER HEAD
6063-T6 ALUMINUM

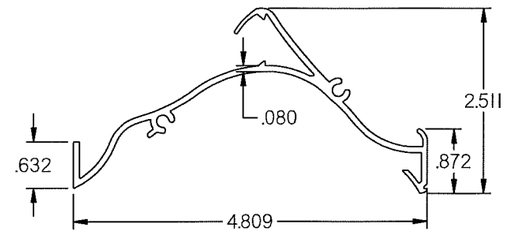

4 LOUVER BLADE
6063-T6 ALUMINUM

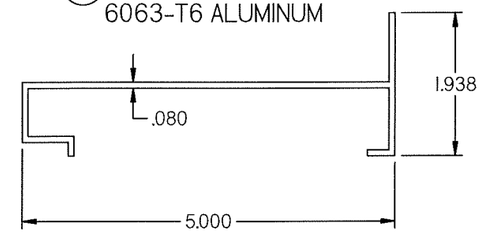

2 LOUVER SILL
6063-T6 ALUMINUM

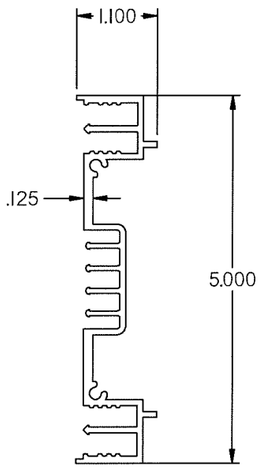

3 LOUVER JAMB
6063-T6 ALUMINUM

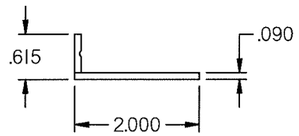

8 LOUVER FLANGE
6063-T6 ALUMINUM

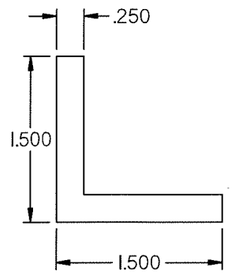

11 LOUVER SLEEVE MOUNT ANGLE
6063-T6 ALUMINUM

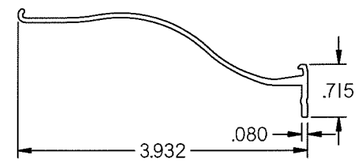

6 LOUVER BLADE BRACE
6063-T6 ALUMINUM

PRODUCT RENEWED
as complying with the Florida Building Code
NOA-No. 23-0928.04
Expiration Date 08/30/2028
By
Miami-Dade Product Control

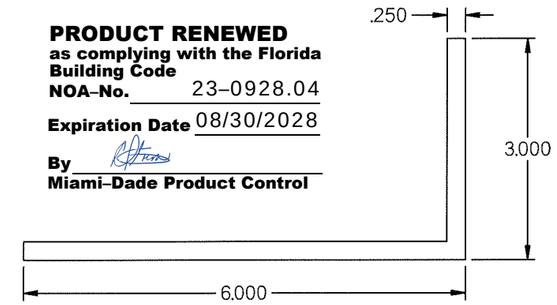

10 LOUVER SUPPORT ANGLE
6063-T6 ALUMINUM

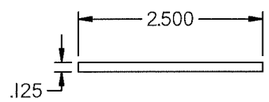

7 MULLION BAR COVER
6063-T6 ALUMINUM

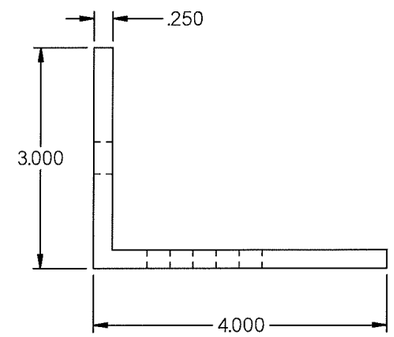

13 SLEEVE ATTACHMENT ANGLE
3.00 X 4.00 X 0.25 X 3.625 LONG
6061-T6 ALUM. ANGLE

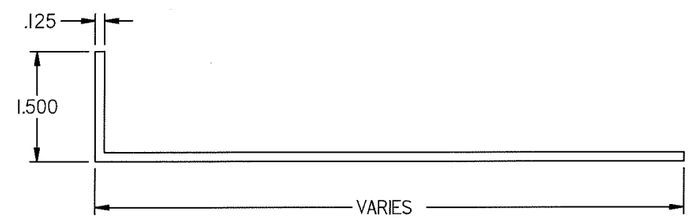

16 FORMED SLEEVE ALUM.
5052-H32 ALUMINUM

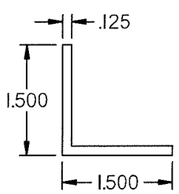

9A LOUVER SLEEVE
ATTACHMENT ANGLE (CONT.)
6063-T6 ALUMINUM

15 MULLION STIFFNER ALUM.
6063-T6 ALUMINUM

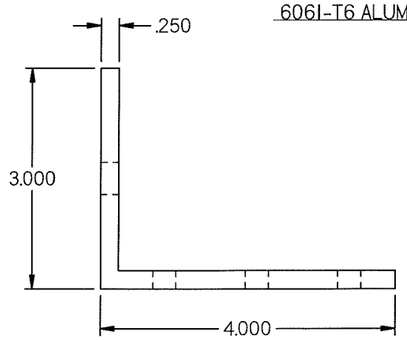

12 MULLION MOUNTING ANGLE
3.00 X 4.00 X 0.25 X 3.625 LONG 6061-T6 ALUM. ANGLE

PRODUCT REVISED
as complying with the Florida Building Code
NOA-No. 21-0825.05
Expiration Date: 08/30/2023
By: Manuel Perez
Miami-Dade Product Control

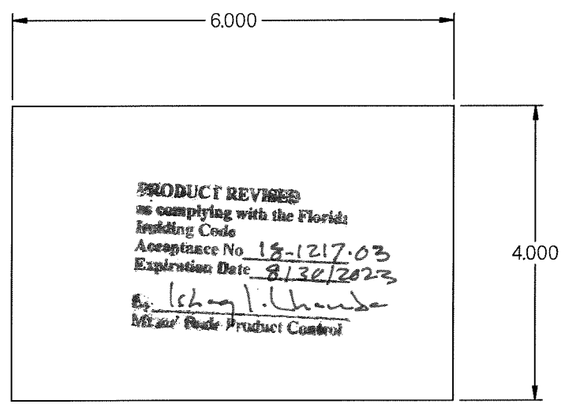

14 ALUMNUM SUPPORT SHIM
1/4"THICK
5052-H32 ALUMINUM

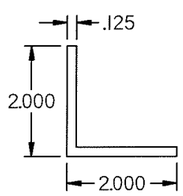

9B LOUVER SLEEVE
ATTACHMENT ANGLE (CONT.)
6063-T6 ALUMINUM

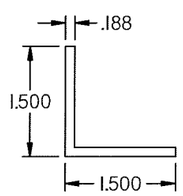

9A LOUVER SLEEVE
ATTACHMENT ANGLE (CONT.)
6063-T6 ALUMINUM

N:\Drawing\LOUVERS\AMCA\1605WDF\1605WDM\1605WDM 216 X 120 FL Sleeve - SA.dft

DWN BY: fcortinas
CHK BY: MAstourian
DATE: 9/10/2018
SCALE: NTS
SHEET: 16 OF 21
REV -
DWG NO: 1605WDM

safe-AIR DOWCO®
1855 SOUTH 54TH AVE. CICERO, IL 60804
Tel. 708-652-9100 Fax 708-652-9100
N. ILLINOIS, LLC.

TITLE: 1605WDM LOUVER, W/ AND W/O DAMPER SLEEVE/CONTINUOUS MOUNT PART PROFILES

WAYNE K. HELMILA
LICENSE
No. 59092
STATE OF FLORIDA
PROFESSIONAL ENGINEER
02/19/2019

COA: 9090

RICE ENGINEERING
105 School Creek Trail
Luxemburg, WI 54217
Phone: (920) 617-1042
Fax: (920) 617-1100
www.rice-inc.com

Florida Firm No: F-01000005061
Certificate of Authorization: #9090
Wayne K. Helmila
Registration No: 59092

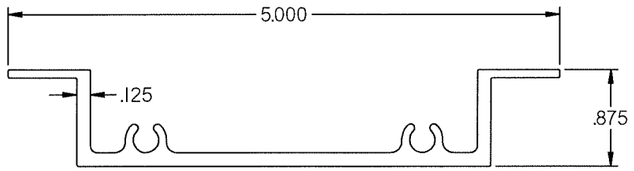

(17) DAMPER HEAD/SILL
6063-T6 ALUMINUM

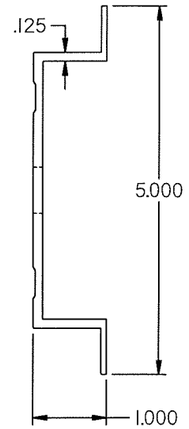

(18) DAMPER JAMB
6063-T6 ALUMINUM

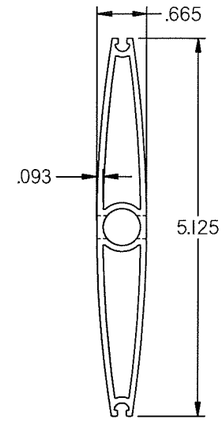

(19) DAMPER BLADE
6063-T6 ALUMINUM

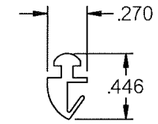

(20) DAMPER BLADE SEAL
MATERIAL VARIES

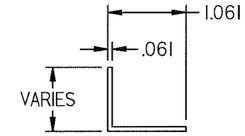

(21) DAMPER TOP/BOTTOM
CLOSUER
ALUMINUM

PRODUCT REVISED
as complying with the Florida
Building Code
Acceptance No. 18-1217.03
Expiration Date 8/30/2023
By: Isaac I. Chanda
Miami-Dade Product Control

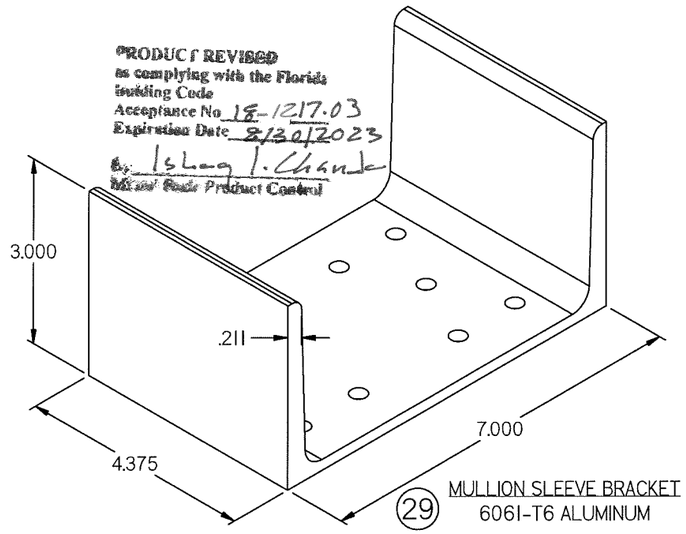

(29) MULLION SLEEVE BRACKET
6061-T6 ALUMINUM

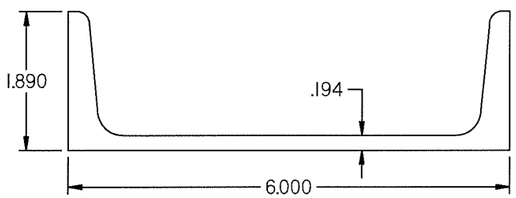

(27) LOUVER BRACE
SUPPORT CHANNEL
C6X8.2 ASTM A36 STEEL CHANNEL

PRODUCT RENEWED
as complying with the Florida Building Code
NOA-No. 23-0928.04
Expiration Date 08/30/2028
By
Miami-Dade Product Control

PRODUCT REVISED
as complying with the Florida Building Code
NOA-No. 21-0825.05
Expiration Date: 08/30/2023
By: Manuel Perez
Miami-Dade Product Control

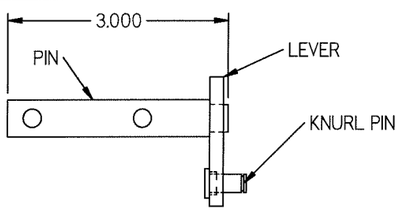

(25) NON DRIVE DAMPER AXEL ASM
MATERIAL VARIES

(22) DAMPER BUSHING
MATERIAL VARIES

(23) DAMPER LINKAGE BAR
MATERIAL VARIES

(24) DAMPER JAMB SEAL
STAINLESS STEEL

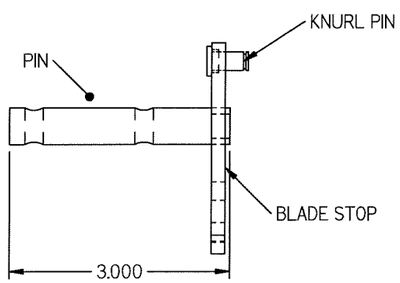

(26) DRIVE SIDE DAMPER AXLE ASM
MATERIAL VARIES

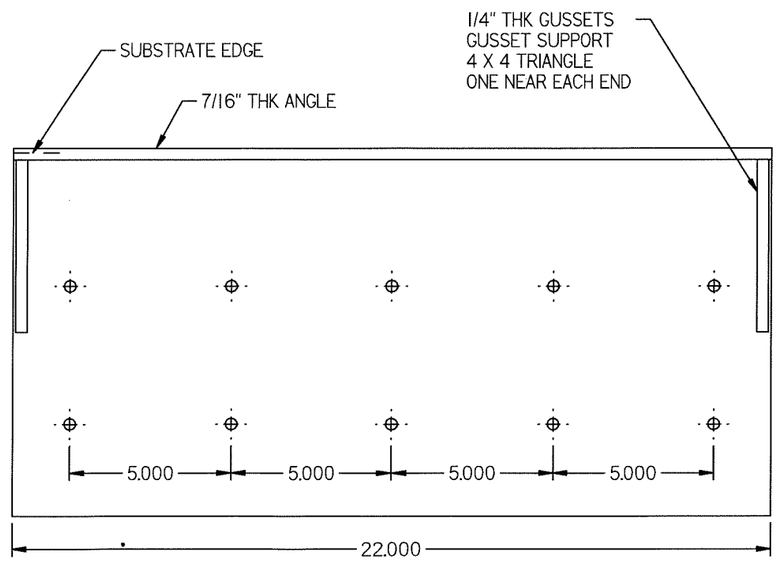

(30) MULLION MOUNTING BRACKET
FOR CONTINUOUS ANGLE BACK OF WALL MOUNT
ASTM A36

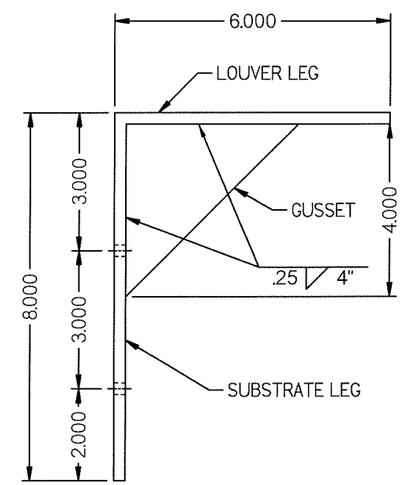

1/2" DIA HILTI KWIK HUS-EZ ANCHOR

USE (10) 1/2" HILTI KWIK HUS-EZ
4-1/4" EMBEDMENT
5" SPACING (HORIZ.) / 3" SPACING (VERT.)
3" MIN. EDGE / END DISTANCE
SPACING AS SHOWN
ASSUME: fc' = 4000 PSI UNCRACKED CONCRETE

N:\Drawing\LOUVERS\AMCA\1605WDF\1605WDM\1605WDM 216 X 120 FL Sleeve - SA.dft

DWN BY: fcortinas
CHK BY: MAstourian
DATE: 9/10/2018
SCALE: NTS
SHEET: 17 OF 21
REV -
DWG NO: 1605WDM

safe-AIR DOWCO®
NI ILLINOIS, LLC.
1855 SOUTH 54TH AVE. CICERO, IL 60804
Tel. 708-652-9100 Fax 708-652-9100

TITLE: 1605WDM LOUVER W/ AND W/O DAMPER SLEEVE/CONTINUOUS MOUNT PART PROFILES

WAYNE K. HELMILA
LICENSE
No. 59092
STATE OF FLORIDA
PROFESSIONAL ENGINEER
02/19/2019

COA: 9090
RICE ENGINEERING
105 School Creek Trail
Luxemburg, WI 54217
Phone: (920) 617-1042
Fax: (920) 617-1100
www.rice-inc.com

Florida Firm No: F-01000005061
Certificate of Authorization: #9090
Wayne K. Helmila
Registration No: 59092

1/4" DIA LAG SCREWS ANCHORS:

USE (16) 1/4 " DIA. X 6" LONG
STANDARD HEX LAG SCREW
6" FULL THREAD ENGAGMENT
1" MIN. EDGE/END DISTANCE
SPACING AS SHOWN
ASSUME: SPRUCE/PINE/FIR, SG=0.42

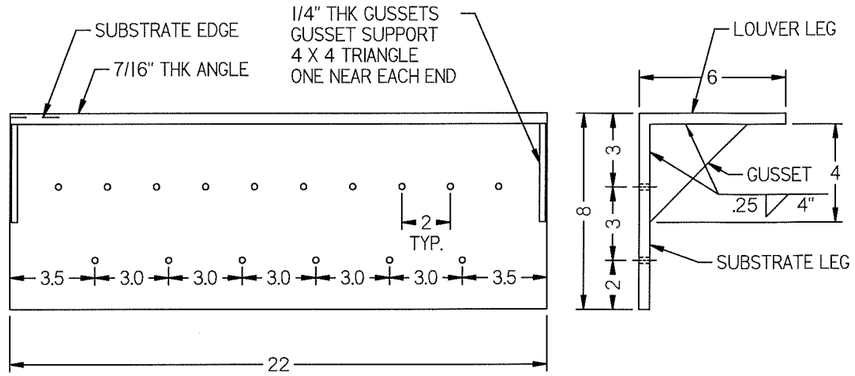

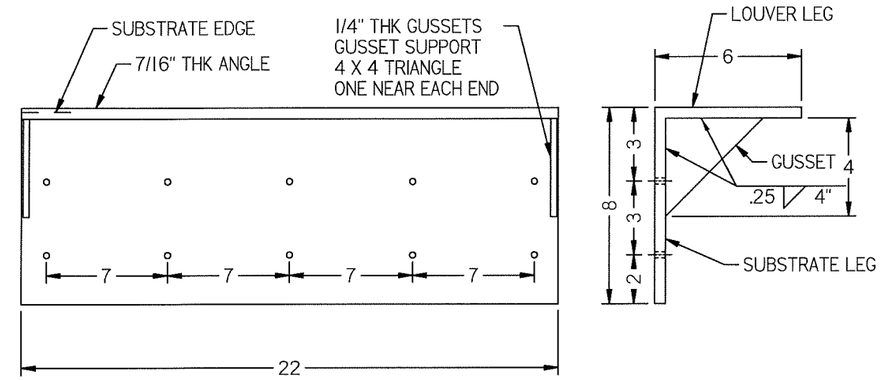

USE (10) 1/2" DIA. HILTI KWIK BOLT TZ
3-5/8"EMBEDMENT
7" SPACING (HORIZ.) / 3" SPACING (VERT.)
3" MIN. EDGE DISTANCE
4" MIN. END DISTANCE
SPACING AS SHOWN
ASSUME FC' = 4000 PSI CRACKED CONCRETE

3/8" DIA. LAG SCREWS ANCHORS:

USE (12) 3/8"DIA. X 6 LONG
STANDARD HEX LAG SCREW
6" FULL THREAD ENGAGMENT
1-1/2" MIN. EDGE/END DISTANCE
SPACING AS SHOWN
ASSUME: SPRUCE/PINE/FIR, SG=0.42

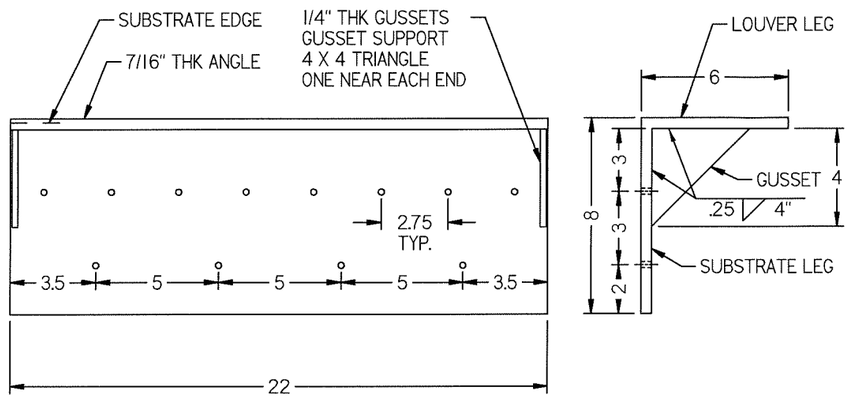

PRODUCT REVISED
as complying with the Florida Building Code
NOA-No. 21-0825.05
Expiration Date: 08/30/2023
By: Manuel Perez
Miami-Dade Product Control

PRODUCT REVISED
as complying with the Florida Building Code
Acceptance No 18-1217.03
Expiration Date 8/30/2023
By: Ishay I. Lhamda
Miami-Dade Product Control

1/4-20 DIA S.S. ELCO DRIL-FLEX ANCHORS

USE (14) 1/4-20 DIA. S.S. ELCO DRIL-FLEX
FULL THREAD ENGAGMENT
1" MIN. EDGE/END DISTANCE
SPACING AS SHOWN
ASSUME: 1/4" STEEL (A-36)

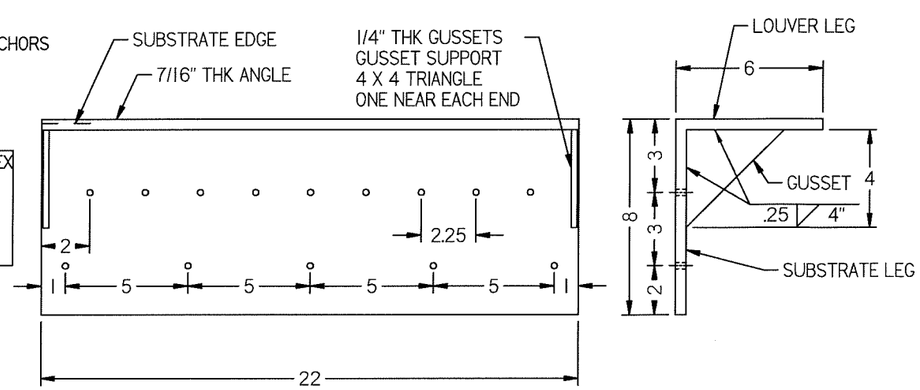

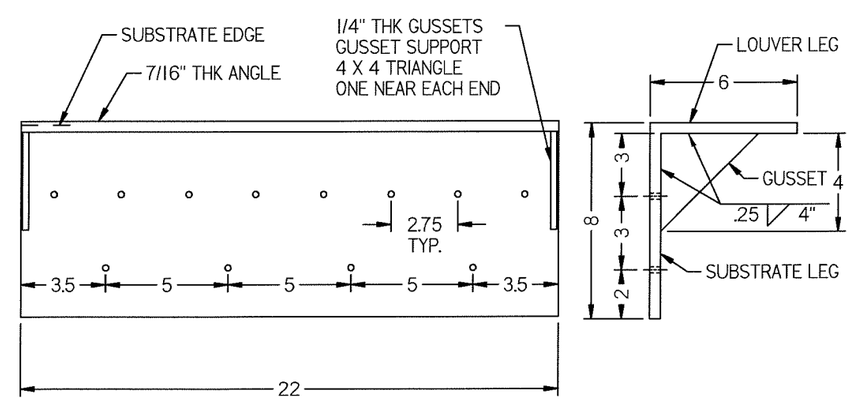

5/16-24 DIA. S.S. ELCO DRIL-FLEX ANCHOR

USE (12) 5/16" DIA. S.S. ELCO DRIL-FLEX
FULL THREAD ENGAGMENT
1" MIN. EDGE/END DISTANCE
SPACING AS SHOWN
ASSUME: 1/4" STEEL (A36)

N:\Drawing\LOUVERS\AMCA\1605WDF\1605WDM\1605WDM 216 X 120 FL Sleeve - SA.dft

DWN BY: fcortinas
CHK BY: MAstourian
DATE: 9/10/2018
SCALE: NTS
SHEET: 18 OF 21
REV -
DWG NO: 1605WDM

safe·air DOWCO®
NI ILLINOIS, LLC.
1855 SOUTH 54TH AVE. CICERO, IL 60804
Tel. 708-652-9100 Fax 708-652-9100

TITLE: MULLION ANGLES
BACK OF THE WALL MOUNT

WAYNE K. HELMILA
LICENSE
No. 59092
STATE OF FLORIDA
PROFESSIONAL ENGINEER
02/19/2019

COA: 9090

RICE ENGINEERING
105 School Creek Trail
Luxemburg, WI 54217
Phone: (920) 617-1042
Fax: (920) 617-1100
www.rice-inc.com

Florida Firm No: F-01000005061
Certificate of Authorization: #9090
Wayne K. Helmila
Registration No: 59092

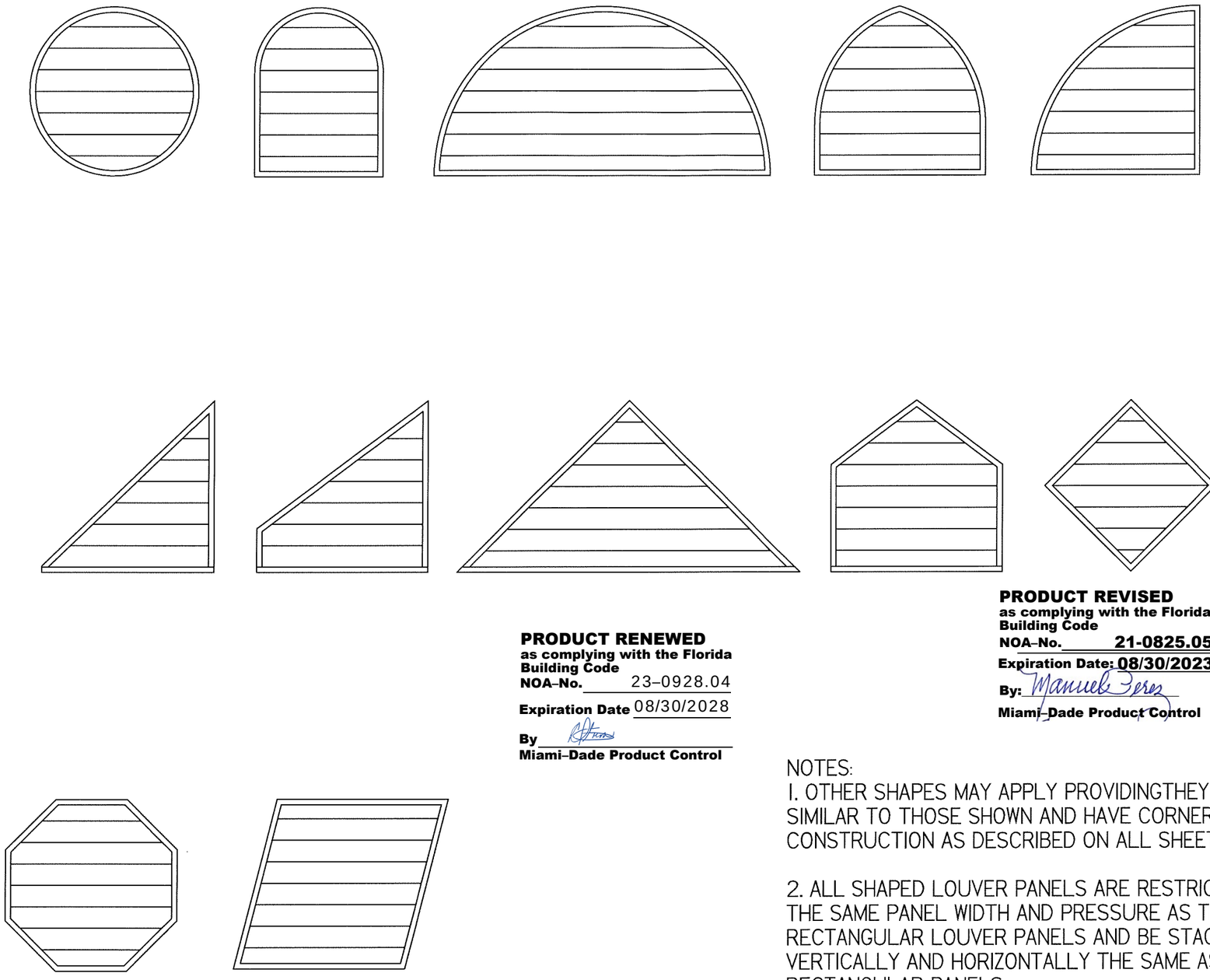

PRODUCT RENEWED
as complying with the Florida Building Code
NOA-No. 23-0928.04
Expiration Date 08/30/2028
By
Miami-Dade Product Control

PRODUCT REVISED
as complying with the Florida Building Code
NOA-No. 21-0825.05
Expiration Date: 08/30/2023
By: Manuel Perez
Miami-Dade Product Control

PRODUCT REVISED
as complying with the Florida Building Code
Acceptance No. 18-1217.03
Expiration Date 8/30/2023
By:
Miami-Dade Product Control

NOTES:

1. OTHER SHAPES MAY APPLY PROVIDINGTHEY ARE SIMILAR TO THOSE SHOWN AND HAVE CORNER CONSTRUCTION AS DESCRIBED ON ALL SHEETS.

2. ALL SHAPED LOUVER PANELS ARE RESTRICTED TO THE SAME PANEL WIDTH AND PRESSURE AS THE RECTANGULAR LOUVER PANELS AND BE STACKED VERTICALLY AND HORIZONTALLY THE SAME AS THE RECTANGULAR PANELS.

3. WHEN SECTION EXCEED 36" IN LENGTH BLADE SUPPORT ANGLES AND BRACKETS ARE REQUIRED.

N:\Drawing\LOUVERS\AMCA\1605WDF\1605WDM\1605WDM 216 X 120 FL Sleeve - SA.dft

DWN BY: fcortinas
CHK BY: MAstourian
DATE: 9/10/2018
SCALE: NTS
SHEET: 19 OF 21
REV -
DWG NO: 1605WDM

safe-air DOWCO
NI ILLINOIS, LLC.
1855 SOUTH 54TH AVE. CICERO, IL 60804
Tel. 708-652-9100 Fax 708-652-9100

TITLE: 1605WDM LOUVER W/ AND W/O DAMPER AVAILABLE SHAPES

WAYNE K. HELMILA
LICENSE
No. 59092
STATE OF FLORIDA
PROFESSIONAL ENGINEER
02/19/2019

COA: 9090

RICE ENGINEERING
105 School Creek Trail
Luxemburg, WI 54217
Phone: (920) 617-1042
Fax: (920) 617-1100
www.rice-inc.com

Florida Firm No: F-01000005061
Certificate of Authorization: #9090
Wayne K. Helmila
Registration No: 59092

BILL OF MATERIAL

ITEM	INTERNAL ID	DESCRIPTION	MATERIAL	NOTES
1	C6-201	LOUVER HEAD	6063-T6 ALUMINIUM	
2	C6-119	LOUVER SILL	6063-T6 ALUMINIUM	
3	C6-199	LOUVER JAMB	6063-T6 ALUMINIUM	
4	C6-200	LOUVER BLADE	6063-T6 ALUMINIUM	
5	-	-	-	
6	C6-202	LOUVER BLADE BRACE	6063-T6 ALUMINIUM	
7	C6-179	MULLION BAR COVER	6063-T6 ALUMINIUM	
8	C6-169	LOUVER FLANGE	6063-T6 ALUMINIUM	
9A	C6-176	1 1/2 X 1 1/2 X 1/8 ANGLE CONT.	6063-T6 ALUMINIUM	USED AT HEAD/SILL/JAMB, OF LOUVER AND SLEEVE
9B	C6-160	2 X 2 X 1/8 ANGLE CONT.	6063-T6 ALUMINIUM	USED AS ATTACHMENT ANGLE
9C		1 1/2 X 1 1/2 X 3/16 ANGLE CONT.	6063-T6 ALUMINIUM	USED AT HEAD/SILL/JAMB, OF LOUVER AND SLEEVE
10	C6-161B	6 X 3 X 1/4 ANGLE	6061-T6 ALUMINIUM	USED AT BLADE SUPPORT AND JAMB SUPPORT
11		1 1/2 X 1 1/2 X 1/4 ANGLE	6063-T6 ALUMINIUM	USED AT HEAD/SLILL/JAMB OF SLEEVE
12		4 X 3 X 1/4 X 3.625 LONG ANGLE	6061-T6 ALUMINIUM	USED AT HEAD/ SILL OF MULLION ATTACHMENT
13		4 X 3 X 1/4 X 3.625 LONG ANGLE	6061-T6 ALUMINIUM	USED AT HEAD/ SILL OF LOUVER SLEEVE ATTACHMENT
14		6 X 4 X 1/4 ALUMININM SUPPORT SHIM	5052-H3 ALUMINIUM	USED AT SILL FOR SUPPORT ANGLE
15		MULLION STIFFENER ALUM	6063-T6 ALUMINIUM	1/8 FORMED ALUM CHANNEL USED AT MULLION
16		FORMED SLEEVE	5052-H32 ALUMINIUM	1/8 FORMED SLEEVE - DEPTH VARIES
17	B2-610	DAMPER HEAD/SILL	6063-T6 ALUMINIUM	
18	B2-609	DAMPER JAMB	6063-T6 ALUMINIUM	
19	B2-527	DAMPER BLADE	6063-T6 ALUMINIUM	
20		DAMPER BLADE SEAL	SILICONE / RUBBER TYPE	MATERIAL VARIES
21		DAMPER TOP/BOTTOM CLOSURE	ALUMINIUM	
22		DAMPER BUSHING	BRONZE / SS	
23		DAMPER LINKAGE BAR	STAINLESS	
24		DAMPER JAMB SEAL	STAINLESS	
25		NON DRIVE DAMPER AXEL ASM	STAINLESS	
26		DRIVE SIDE DAMPER AXLE ASM	STAINLESS	
27		C6X8.2 STEEL CHANNEL		USED AT BLADE BLACE
28		NOT USED		USED AT MULLION
29		7" X 21" ALUMINIUM SLEEVE BRACKET	6061-T6	MULLION SLEEVE BRACKET
30		MULLION MOUNTING ANGLE BRACKET	ASTM A-36	MULLION MOUNTING
31	C6-180	SCREW,MTL,10-24X1,HEX		
32	C6-181	1/4 NYLON INSERT LOCKNUT		
33	C6-182	1/4-20x2-1/2 HEX CAP SCREW	STAINLESS	
34	C6-183	WASHER,BONDED,10X1/2	STAINLESS	300 SERIES, SS COND. CW FY - 65 KSI
35	C6-184	SCREW,MTL,12-24-1-1/4,HEX		300 SERIES, SS COND. CW FY - 65 KSI
36	C6-185	1/4-20x1 HEX SCREW	STAINLESS	300 SERIES, SS COND. CW FY - 65 KSI
37	C6-186	1/4 COMM'L FLAT WASHER		300 SERIES, SS COND. CW FY - 65 KSI
38	C6-187	1/4-20x1 HEX CAP SCREW 18-8	STAINLESS	
39	C6-188	SCREW, MTL,HEX, 8-32 X 1		300 SERIES, SS COND. CW FY - 65 KSI
40	C6-189	SCREW, METAL, HW, 10-24 X 1-1/2		300 SERIES, SS COND. CW FY - 65 KSI
41	C6-192	SCREW, MTL, HEX, 8 X 1-1/2	STAINLESS	300 SERIES, SS COND. CW FY - 65 KSI
42	C6-193	SCREW, METAL, HEX, 14 X 1-1/2	STAINLESS	300 SERIES, SS COND. CW FY - 65 KSI
43	C6-194	SCREW, METAL, HEX, 12 X 1-1/2	STAINLESS	300 SERIES, SS COND. CW FY - 65 KSI
44	C6-195	1/4-20 X 1 1/4 HEX CAP SCREW 18-8	STAINLESS	
45	C6-196	1/4-20 FIN. HEX NUT 18-8	STAINLESS	
46	C6-197	1/4 LOCKWASHER 18-8	STAINLESS	
47	C6-198	SCREW, MTL, HEX, 8 X 3/4	STAINLESS	300 SERIES, SS COND. CW FY - 65 KSI
48		3/8"-16 X 2 18-6 HEX HEAD BOLT	STAINLESS	300 SERIES, SS COND. CW FY - 65 KSI
49		3/8-16 HEX LOCK NUT	STAINLESS	300 SERIES, SS COND. CW FY - 65 KSI
50		3/8-FLAT WASHER	STAINLESS	300 SERIES, SS COND. CW FY - 65 KSI

N:\Drawing\LOUVERS\AMCA\1605WDF\1605WDM\1605WDM 216 X 120 FL Sleeve - SA.dft

PRODUCT REVISED
as complying with the Florida Building Code
NOA-No. 21-0825.05
Expiration Date: 08/30/2023
By: Manuel Perez
Miami-Dade Product Control

PRODUCT RENEWED
as complying with the Florida Building Code
NOA-No. 23-0928.04
Expiration Date 08/30/2028
By
Miami-Dade Product Control

PRODUCT REVISED
as complying with the Florida Building Code
Acceptance No. 18-1217.03
Expiration Date 8/30/2023
By
Miami-Dade Product Control

DWN BY: fcortinas
CHK BY: MAstourian
DATE: 9/10/2018
SCALE: NTS
SHEET: 20 OF 21
REV -
DWG NO: 1605WDM

safe-AIR DOWCO®
NI ILLINOIS, LLC.
1855 SOUTH 54TH AVE. CICERO, IL 60804
Tel. 708-652-9100 Fax 708-652-9100

TITLE: 1605WDM LOUVER W/ AND W/O DAMPER SLEEVE / CONTINUOUS MOUNT NOTES / BILL OF MATERIAL

WAYNE K. HELMILA
LICENSE
No. 59092
STATE OF FLORIDA
PROFESSIONAL ENGINEER
02/19/2019

COA: 9090
RICE ENGINEERING
105 School Creek Trail
Luxemburg, WI 54217
Phone: (920) 617-1042
Fax: (920) 617-1100
www.rice-inc.com

Florida Firm No: F-01000005061
Certificate of Authorization: #9090
Wayne K. Helmila
Registration No: 59092

*EMBEDMENT DEPTH IS EQUAL TO OVERALL LENGTH FOR ALL FASTENERS. IF SHIMS ARE USED, FASTENER LENGTH MUST BE INCREASED BY THICKNESSOF SHIMS

LOUVER MODEL 1605WDM FASTENER SCHEDULE

WOOD	STEEL STUD	STEEL	CONRETE	CMU	MIN.	FASTENER TYPE	DIAMETER	# Rqd	O.C. SPACING	EDGE	EMBEDMENT
JAMB ANGLE MOUNT FASTENER, WIDTH <= 72 INCHES											
X					SG 0.42	LAG SCREW (300 SERIES SS- COND. CW- Fy = 65ksi)	1/4"	1	3"	2"	2"
X					SG 0.42	LAG SCREW (300 SERIES SS- COND. CW- Fy = 65ksi)	3/8"	1	5"	2"	2"
	X				16 Ga.	ELCO DRILL-FLEX DRILLING SCREWS (300 SERIES SS- COND. CW- Fy= 65ksi)	1/4"	1	4-1/2"	2"	3 THREADS BEYOND SUBSTRATE
		X			A-36	ELCO DRILL-FLEX DRILLING SCREWS (300 SERIES SS- COND. CW- Fy= 65ksi)	1/4"	1	13-1/2"	2"	1/4"
		X			A-36	ELCO DRILL-FLEX DRILLING SCREWS (300 SERIES SS- COND. CW- Fy= 65ksi)	5/16"	1	16"	2"	1/4"
			X-CRACKED		4ksi	HILTI KWIK HUS-EZ **	1/4"	1	5-3/4"	4"	1 5/8"
			X-CRACKED		4ksi	HILTI KWIK HUS-EZ **	3/8"	1	8"	4"	1 5/8"
				X	1.5ksi	HILTI KWIK -CON II+	1/4"	1	4-3/4"	1-1/2"	1-3/4"
				X	1.5ksi	HILTI KWIK-BOLT3+	3/8"	1	8"	4"	2-1/2"
MULLION ANGLE DIRECT MOUNT FASTENERS, HEIGHT <= 120 INCHES											
X					SG 0.42	LAG SCREW (300 SERIES SS- COND. CW- Fy = 65ksi)	1/4"	10	VARIES	2"	4"
X					SG 0.42	LAG SCREW (300 SERIES SS- COND. CW- Fy = 65ksi)	1/2"	6	VARIES	2"	2"
		X			A-36	ELCO DRILL-FLEX DRILLING SCREWS (300 SERIES SS- COND. CW- Fy= 65ksi)	1/4"	4	VARIES	2"	1/4"
		X			A-36	ELCO DRILL-FLEX DRILLING SCREWS (300 SERIES SS- COND. CW- Fy= 65ksi)	5/16"	2	2-3/4"	2"	1/4"
			X-UNCRACKED		4ksi	HILTI KWIK BOLT 3 - C.S. **	3/8"	2	4"	7"	2-5/16"
			X-CRACKED		4ksi	HILTI KWIK BOLT TZ **	5/8"	2	4"	7"	4-7/16"
MULLION ANGLE MOUNT BACK OF WALL FASTENERS, HEIGHT <= 120 INCHES											
X					SG 0.42	LAG SCREW (300 SERIES SS- COND. CW- Fy = 65ksi)	1/4"	16	VARIES	1"	6"
X					SG 0.42	LAG SCREW (300 SERIES SS- COND. CW- Fy = 65ksi)	3/8"	12	VARIES	1-1/2"	6"
		X			A-36	ELCO DRILL-FLEX DRILLING SCREWS (300 SERIES SS- COND. CW- Fy= 65ksi)	1/4"	14	VARIES	1"	1/4"
		X			A-36	ELCO DRILL-FLEX DRILLING SCREWS (300 SERIES SS- COND. CW- Fy= 65ksi)	5/16"	12	VARIES	1"	1/4"
			X-UNCRACKED		4ksi	HILTI KWIK HUS-EZ **	1/2"	10	VARIES	3"	4-1/4"
			X-CRACKED		4ksi	HILTI KWIK BOLT TZ **	1/2"	10	VARIES	3"	3-5/8"

GENERAL NOTES:

1. IT SHALL BE THE RESPONISBILITY OF THE ENGINEER OF RECORD TO VERIFY THE STRUCTURAL INTEGRITY OF THE EXISTING STRUCTURE TO SUPPORT THE LOADS IMPOSED BY THE LOUVER(S).
2. THE 1605WDM WITH AND WITHOUT 2020 DAMPER HAVE BEEN DESIGNED AND TESTED IN ACCORDANCE WITH THE FLORIDA BUILDING CODE (FBC) AND TEST PROTOCALS tas 100 A (WIND DRIVEN RAIN), TAS-201 (IMPACT), TAS-202 (UNIFORM STATIC PRESSURE), AND TAS-203 (CYCLIC FATIGUE).
3. MAXIMUM SINGLE SECTION SIXE IS 72" WIDE X 120" HIGH.
4. MAXIMUM ASSEMBLED LOUVER SIZE IS UNLIMITED WIDE X 120" HIGH.
5. SECTIONS OR ASSEMBLIES MAY BE STACKED VERTICALLY PROVIDING A SUITABLE STRUCTURAL SUPPORT IS DESIGNED AND INSTALLED BY OTHERS TO SUPPORT ALL LOADS TRANSFERRED FROM THE LOUVER.
6. CMU SHALL BE ASTM C90, TYPE II, 2,000 MIN PSI GROUT-FILLED.
7. THE SLEEVE MOUNT STYLE LOUVER UTILIZES AN ANCHORLESS INSTALLATION METHOD THAT DOES NOT REQUIRE THE USE OF FASTENERS INTO THE SUBSTRATE. IT MAY BE INSTALLED IN ANY SUBSTRATE THAT WILL WITHSTAND THE LOADS TRANSFERRED TO IT BY THE LOUVER. SAFE AIR . DOES NOT DETERMINE THE STRUCTURAL INTEGRITY OF THE SUBSTRATE STRUCTURE.
8. THE CONTINUOUS ANGLE MOUNT STYLE UTILIZES A CONTINUOUS JAMB ANGLE THAT IS ATTACHED TO THE SUBSTRATE BY FASTENERS. IT MAY BE INSTALLED IN CONCRETE, CMU, STEEL, OR WOOD ACCORDING TO THE FASTENER SCHEDULE. SAFE AIR DOES NOT DETERMINE THE STRUCTUAL INTEGRITY OF THE SUBSTRATE STRUCTURE.
9. LOUVER ASSEMBLY IS QUALIFIEDFOR A MAXIMUM DESIGN LOAD OF +/- 150 PSF.
10. LOUVER ASSEMBLY WITH AND WITHOUT 2020 DAMPER SHALL ONLY BE INSTALLED IN A LOCATION WHERE THE ROOM BEHIND THE LOUVER IS DESIGNED TO DRAIN WATER PENETRATING INTO THE ROOM AND THE ROOM WILL HOUSE WATER RESISTANT / WATER PROOF EQUIPMENT, COMPONENTS, AND / OR SUPPLIES.
11. INSTALLER TO PROVIDE SEPERATION OF DISSIMILAR MATERIALS AS REQUIRED.
12. THE DAMPER MAY BE OPERATIED BY A MANUAL QUADRANT OR BY AN ELECTRIC OR PNEUMATIC ACTUALTOR, THE DAMPER'S ACTUATOR IS NOT PART OF THIS APPROVAL, BUT SHALL BE CERTIFIED BY AN INDEPENDENT TESTING AGENCY.
13. FRAME CONSTRUCTION, HEAD AND SILL ARE SQUARE CUT, JAMBS ARE SQUARE CUT @ HEAD AND SILL. CORNERS ARE SECURED WITH (2) #10-24 x 1 1/2 HW, BLADES ARE SECURED TO JAMBS WITH (2) #10-24 X 1 1/2 HW, @ EACH END.
14. STEEL / STAINLESS-STEEL/ ALUMINIUM PARTS MAY BE MADE OUT OF ALTERNATE ALLOY THA HAS EQUAL OR GREATER YIELD STRENGTH.
15. BLADE SUPPORT ANGLE AND BLADE SUPPORT BRACE ONLY REQUIRED WHEN ACTUAL LOUVER SECTION WIDTH IS GREATER THAN 36 INCHES.
16. THREAD PENETRATION LENGTH SIGNIFIES THE REQUIRED LENGTH OF THE THREADED PORTION OF THE FASTENER INTO THE WOOD SUBSTRATE PROVINDING FULL CONTACT WITH WOOD. LAG SCREW T10 CANNOT BE CONSIDERED PART OF THE TREADED PORTION OF THE SCREW. LAG SCREWS ARE NOT TO BE INSTALLED AT WOOD JOINTS / SPLICES WHERE THE LAG SCREW COULD FALL BETWEEN MEMBERS.

** NOTE ENGINEER OF RECORD (EOR) IS RESPONSIBLE FOR DETERMINING IF CONCRETE IS TO BE CONSIDERED CRACKED OR UNCRACKED.

N:\Drawing\LOUVERS\AMCA\1605WDF\1605WDM\1605WDM 216 X 120 FL Sleeve - SA.dft

PRODUCT RENEWED
as complying with the Florida Building Code
NOA-No. 23-0928.04
Expiration Date 08/30/2028
By
Miami-Dade Product Control

PRODUCT REVISED
as complying with the Florida Building Code
NOA-No. 21-0825.05
Expiration Date: 08/30/2023
By: Manuel Perez
Miami-Dade Product Control

PRODUCT REVISED
as complying with the Florida Building Code
Acceptance No 18-1217.03
Expiration Date 8/30/2023
By Ishaq I. Chanda
Miami-Dade Product Control

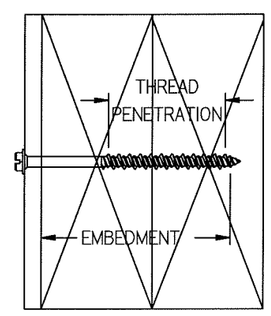

DWN BY: fcortinas
CHK BY: MAstourian
DATE: 9/10/2018
SCALE: NTS
SHEET: 21 OF 21
REV -
DWG NO: 1605WDM

safe-air DOWCO®
1855 SOUTH 54TH AVE. CICERO, IL 60804
NI ILLINOIS, LLC.
Tel. 708-652-9100 Fax 708-652-9100

TITLE: 1605WDM LOUVER W/ AND W/O DAMPER SLEEVE NOTES / FASTENER SCHEDULE

WAYNE K. HELMILA
LICENSE
No. 59092
STATE OF FLORIDA
PROFESSIONAL ENGINEER
02/19/2019

COA: 9090
RICE ENGINEERING
105 School Creek Trail
Luxemburg, WI 54217
Phone: (920) 617-1042
Fax: (920) 617-1100
www.rice-inc.com

Florida Firm No: F-01000005061
Certificate of Authorization: #9090
Wayne K. Helmila
Registration No: 59092