MIAMI-DADE COUNTY
DEPARTMENT OF REGULATORY AND ECONOMIC RESOURCES (RER)
BOARD AND CODE ADMINISTRATION DIVISION

MIAMI-DADE COUNTY
PRODUCT CONTROL SECTION
11805 SW 26 Street, Room 208
Miami, Florida 33175-2474
T (786) 315-2590 F (786) 315-2599
www.miamidade.gov/economy

NOTICE OF ACCEPTANCE (NOA)

Kingspan Insulated Panels, Inc.
726 Summerhill Drive
Deland, FL 32724

SCOPE:
This NOA is being issued under the applicable rules and regulations governing the use of construction materials. The documentation submitted has been reviewed and accepted by Miami-Dade County RER- Product Control Section to be used in Miami Dade County and other areas where allowed by the Authority Having Jurisdiction (AHJ).

This NOA shall not be valid after the expiration date stated below. The Miami-Dade County Product Control Section (In Miami Dade County) and/or the AHJ (in areas other than Miami Dade County) reserve the right to have this product or material tested for quality assurance purposes. If this product or material fails to perform in the accepted manner, the manufacturer will incur the expense of such testing and the AHJ may immediately revoke, modify, or suspend the use of such product or material within their jurisdiction. RER reserves the right to revoke this acceptance if it is determined by Miami-Dade County Product Control Section that this product or material fails to meet the requirements of the applicable building code.

This product is approved as described herein and has been designed to comply with the High Velocity Hurricane Zone of the Florida Building Code.

DESCRIPTION: "KS Series" Insulated Steel Wall Panel

APPROVAL DOCUMENT: Drawing No. 23-588-KS Series-ER, titled Kingspan "KS Series" Insulated Steel Wall Panel, sheets 1 through 10 of 10, prepared by Cbuck Engineering, dated October 15, 2023, last revision #5 dated October 15, 2023, signed and sealed by James L. Buckner, P.E., on October 15, 2023 bearing the Miami-Dade County Product Control Revision stamp with the Notice of Acceptance number and the expiration date by the Miami-Dade County Product Control Section.

MISSILE IMPACT RATING: Large and Small Missile Impact Resistant

LABELING: Each panel shall bear a permanent label with the manufacturer's name or logo, city, state and the following statement: "Miami-Dade County Product Control Approved", unless otherwise noted herein.

RENEWAL of this NOA shall be considered after a renewal application has been filed and there has been no change in the applicable building code negatively affecting the performance of this product.

TERMINATION of this NOA will occur after the expiration date or if there has been a revision or change in the materials, use, and/or manufacture of the product or process. Misuse of this NOA as an endorsement of any product, for sales, advertising or any other purposes shall automatically terminate this NOA. Failure to comply with any section of this NOA shall be cause for termination and removal of NOA.

ADVERTISEMENT: The NOA number preceded by the words Miami-Dade County, Florida, and followed by the expiration date may be displayed in advertising literature. If any portion of the NOA is displayed, then it shall be done in its entirety.

INSPECTION: A copy of this entire NOA shall be provided to the user by the manufacturer or its distributors and shall be available for inspection at the job site at the request of the Building Official.

This NOA **revises NOA #20-1102.04** and consists of this page 1, evidence submitted pages E-1, E-2 & E-3 as well as approval document mentioned above.
The submitted documentation was reviewed by **Helmy A. Makar, P.E., M.S.**

MIAMI-DADE COUNTY APPROVED

Helmy A. Makar
02/29/24

NOA No. 23-1024.07
Expiration Date: 02/04/2026
Approval Date: 02/29/2024

Kingspan Insulated Panels, Inc.

NOTICE OF ACCEPTANCE: EVIDENCE SUBMITTED

1. EVIDENCE SUBMITTED UNDER PREVIOUS APPROVAL #15-0820.05

A. DRAWINGS

1. *Drawing No. 14-143-KS Series-ER.1, titled "KS Series Insulated Wall Panel System", sheets 1 through 10 of 10, prepared by Cbuck Engineering, dated 10/08/ 2015, revision #2 dated 01/26/2016, signed & sealed by James L. Buckner, P.E.*

B. TESTS

1. *Test report on Large Missile Impact Test per TAS 201, Cyclic Wind Pressure Test per TAS 203, and Uniform Static Air Pressure Test per TAS 202 on KS Series Insulated Steel Wall Panel, prepared by Farabaugh Engineering and Testing, Inc., Report # T151-15, dated 03/31/15, signed & sealed by Daniel G. Farabaugh, P.E.*
2. *Test report on Surface Burning Characteristics per ASTM E84-10 on KS Series Insulated Steel Wall Panel, prepared by Intertek, Report No. 100151273COQ-001, dated 11/02/2011.*

C. CALCULATIONS

1. *Calculations titled KS Series Insulated Wall Panel System, 3 pages, dated 11/16/15, prepared by Cbuck Engineering, signed & sealed by James L. Buckner, P.E.*

D. QUALITY ASSURANCE

1. *By Miami-Dade County Department of Regulatory and Economic Resources.*

E. MATERIAL CERTIFICATIONS

1. *FM Approval Report for various wall series produced with minimum 26 GA. Steel facers and the KSUSSB-01 PIR Foam System.*

2. EVIDENCE SUBMITTED UNDER PREVIOUS APPROVAL #16-1130.01

A. DRAWINGS

1. *Drawing No. 16-162-KS Series-ER, titled Kingspan "KS Series" Insulated Steel Wall Panel, sheets 1 through 10 of 10, prepared by Cbuck Engineering, dated October 08, 2015, last revision #3 dated October 03, 2016, signed and sealed by James L. Buckner, P.E., on October 03, 2016.*

B. TESTS

1. *None.*

C. CALCULATIONS

1. *None.*

D. QUALITY ASSURANCE

1. *By Miami-Dade County Department of Regulatory and Economic Resources.*

Helmy A. Makar, P.E., M.S.
Product Control Section Supervisor
NOA No. 23-1024.07
Expiration Date: 02/04/2026
Approval Date: 02/29/2024

E. MATERIAL CERTIFICATIONS

1. *None.*

3. EVIDENCE SUBMITTED UNDER PREVIOUS APPROVAL #18-0118.16

A. DRAWINGS

1. *Drawing No. 16-162-KS Series-ER, titled Kingspan "KS Series" Insulated Steel Wall Panel, 10 sheets, prepared by CBuck Engineering, dated 01/06/18, revision #3 dated 10/03/16, signed and sealed by James L. Buckner, P.E., on 01/ 06/18.*

B. TESTS

1. *None.*

C. CALCULATIONS

1. *None.*

D. QUALITY ASSURANCE

1. *By Miami-Dade County Department of Regulatory and Economic Resources.*

E. MATERIAL CERTIFICATIONS

1. *None.*

4. EVIDENCE SUBMITTED UNDER PREVIOUS APPROVAL #20-1102.04

A. DRAWINGS

1. *Drawing No. 20-205-KS Series-ER, titled Kingspan "KS Series" Insulated Steel Wall Panel, sheets 1 through 10 of 10, prepared by Cbuck Engineering, dated Jan. 06, 2018, last revision #4 dated July 25, 2020, signed and sealed by James L. Buckner, P.E., on August 11, 2020.*

B. TESTS

1. *Test report per ASTM E84-10 on KS Series Insulated Steel Wall Panel, prepared by IFM Approvals, Report No. 3058165, dated 01/12/2018.*
2. *Test report on KS Series Insulated Steel Wall Panel, per ASTM E-72, prepared by Intertek, Report # 103238238TOR-007, dated 04/27/18, signed & sealed by Craig H. Wagner, P.E.*

C. CALCULATIONS

1. *None.*

D. QUALITY ASSURANCE

1. *By Miami-Dade County Department of Regulatory and Economic Resources.*

E. MATERIAL CERTIFICATIONS

1. *None.*

Helmy A. Makar, P.E., M.S.
Product Control Section Supervisor
NOA No. 23-1024.07
Expiration Date: 02/04/2026
Approval Date: 02/29/2024

NOTICE OF ACCEPTANCE: EVIDENCE SUBMITTED

5. NEW EVIDENCE SUBMITTED

A. DRAWINGS

1. *Drawing No. 23-588-KS Series-ER, titled Kingspan "KS Series" Insulated Steel Wall Panel, sheets 1 through 10 of 10, prepared by Cbuck Engineering, dated October 15, 2023, last revision #5 dated October 15, 2023, signed and sealed by James L. Buckner, P.E., on October 15, 2023.*

B. TESTS

1. *None.*

C. CALCULATIONS

1. *None.*

D. QUALITY ASSURANCE

1. *By Miami-Dade County Department of Regulatory and Economic Resources.*

E. MATERIAL CERTIFICATIONS

1. *None.*

F. STATEMENTS

1. *Letter of compliance with the FBC, 2023 Edition, dated October 15, 2023, signed and sealed by James L. Buckner, P.E., on October 15, 2023.*

Helmy A. Makar, P.E., M.S.
Product Control Section Supervisor
NOA No. 23-1024.07
Expiration Date: 02/04/2026
Approval Date: 02/29/2024

Engineering Report & Drawings

Of

Kingspan Insulated Panels, Inc.

"KS Series"

Insulated Wall Panel System

For

Miami-Dade Notice of Acceptance (N.O.A.)

Category: **Panels**
Sub - Category: **Wall**

Product Type: Insulated Metal Wall Panel System
Interior & Exterior Facing Material: Steel
Core Material: Polyisocyanurate Foam

Prepared by:
James L. Buckner, P.E.
Florida Professional Engineer # 31242

Report No.: 23-288-KS Series-ER
Revises: Report 20-205-KS Series-ER
Report No. 16-162-KS Series-ER

Date: 10 / 15 / 23

Contents:

PRODUCT REVISED
as complying with the Florida Building Code
Acceptance No 23-1024.07
Expiration Date 02/04/2026
By
Miami Dade Product Control

JAMES L. BUCKNER
LICENSE
No 31242
STATE OF FLORIDA
PROFESSIONAL ENGINEER
10/15/23

1.0 Product:

1.1 **Manufacturer:** Kingspan Insulated Panels, Inc.
1.2 **Product Name:** "KS Series" Insulated Steel Wall Panel
1.3 **Category:** Panels
1.4 **Subcategory:** Wall

2.0 Evaluation Scope:

2.1 **Evaluation Criteria:**

2.1.1 Florida Building Code (FBC) 7th Edition (2020) and FBC 8th (2023)
2.1.2 Code Section: High Velocity Hurricane Zone (HVHZ)
2.1.3 Miami-Dade Department Of Regulatory And Economic Resources, Product Control Section Checklist # 0250

2.2 **Properties Evaluated:**

2.2.1 Wind Resistance Properties
2.2.1.1 Air Infiltration per TAS 202
2.2.1.2 Uniform Static Air Pressure per TAS 202
2.2.1.3 Water Resistance per TAS 202
2.2.1.4 Large Missile Impact per TAS 201
2.2.1.5 Cyclic Wind Pressure per TAS 203

2.2.2 Material Properties
2.2.2.1 Tensile Strength per ASTM A370

2.2.3 Fire and Flame Properties
2.2.3.1 Flame Spread Index per ASTM E84
2.2.3.2 Smoke Developed Index per ASTM E84
2.2.3.3 Self-Ignition Temperature per ASTM D1929

2.3 **Limits of Evaluation:**

This product is limited to compliance with the criteria in section 2.1 and properties in section 2.2 of this report.

3.0 Evaluated Uses:

Kingspan "KS Series" Insulated Wall Panels are evaluated for use as nonbearing exterior wall panels.

4.0 Assembly Description:

4.1 **General:**

Kingspan "KS Series" Insulated Wall Panel systems are factory assembled sandwich panels with steel facings and polyisocyanurate foam core. These panels are applied vertically. The panels have a tongue and groove interlocking edges. The panels are anchored to supports with clips and screws.

4.2 **Panel Dimensions:**

4.2.1 Coverage Width: 42 in. Maximum
24 in. Minimum

4.2.2 Overall Thicknesses: 2 in, 2.5 in, 3 in, 4 in, 5 in, & 6 in

PRODUCT REVISED
as complying with the Florida Building Code
Acceptance No 23-1024.07
Expiration Date 02/04/2026
By
Miami Dade Product Control

JAMES L. BUCKNER
LICENSE
No 31242
STATE OF FLORIDA
PROFESSIONAL ENGINEER
10/15/23

5.0 Support:

The Support assembly is designed by others and shall have the following minimum Characteristics:

5.1 Type: Horizontal Girts or Vertical Studs
5.2 Material: Steel
5.3 Thickness: 14 Ga.
5.4 Yield Strength: 50 ksi Minimum
5.5 Support Spacing: Refer to Table Below

6.0 Performance:

6.1 **Wind Resistance:**

PANEL DESCRIPTION	SUPPORT SPACING (ft.)	TABLE "A" ALLOWABLE DESIGN LOADS (psf)			
		Single Span		Double Span	
		Positive	Negative	Positive	Negative
Min. 26 Ga. Steel Interior & Exterior skin Panel Core Thicknesses: 2", 2.5", 3", 4", 5", & 6"	4 ft	70	- 90	70	- 90
	5 ft	63	- 80	63	- 80
	6 ft	58	- 72	58	- 72
	7 ft	52	- 62	52	- 62
	8 ft	46	- 53	46	- 53
	9 ft	41	- 44	41	- 44
	10 ft	35	- 35	35	- 35

Notes:
- Allowable design pressure(s) for allowable stress design (ASD).
- Fastener Attachment to Steel Supports May Be Designed By A Qualified Design Professional As Required By The Florida Building Code For Site Specific Projects.
- Diaphragm and axial load capacity are not included in this evaluation.

6.2 **Air Infiltration:**

Standard: TAS 202
Results: Passed

6.3 **Water Infiltration:**

Standard: TAS 202
Results: Passed

6.4 **Impact Rating:**

Type: Large Missile Impact:
Standard: TAS 201
Results: Passed

PRODUCT REVISED
as complying with the Florida Building Code
Acceptance No 23-1024.07
Expiration Date 02/04/2026
By
Miami Dade Product Control

6.5 **Fire Classification:**

Standard: ASTM D1929

	Required	Tested
Self Ignition Temperature:	> 650° F	878° F

Standard: ASTM E 84

	Required	Tested
Flame Spread Index:	< 75	26
Smoke Developed Index:	< 450	255

JAMES L. BUCKNER
LICENSE
No 31242
STATE OF FLORIDA
PROFESSIONAL ENGINEER
10/15/23

KINGSPAN "KS SERIES" INSULATED STEEL WALL PANEL
ENGINEERING REPORT

CBUCK Engineering
Specialty Structural Engineering
CBUCK, Inc. COA #8064
www.cbuckinc.net
(561) 491-9927
1374 Community Dr.
Jupiter, FL 33458

MANUFACTURER:
Kingspan Insulated Panels, Inc.
726 Summerhill Drive
Deland, FL 32724

DATE:	10 / 15 / 23
PAGE #:	3 OF 10
REPORT #:	23-588-KS Series-ER
PROJECT #:	20-205 & 23-588
DRAWN BY:	YD
REV. 5:	10 / 15 / 23

7.0 Installation:

Each panel shall be fastened at the joints to the supports with ONE 12 ga. hidden fastener clip (per section 12.2) and TWO 1/4"-14 HWH TEK3 self-drilling screws per clip (per section 12.3).
In addition, attach the interior face of each panel with four #10 Fab-Lok fasteners (per section 12.4), at each panel intermediate to supports at 8.4" o.c. maximum.
All bolts and washers shall be galvanized or stainless steel of 60 ksi minimum
The connection of the steel channel to the existing supporting structure is not part of this product control approval and it shall be submitted to permitting jurisdiction for review and approval.
Refer to Drawings on pages 6 through 10 of this report for supplemental installation guide.

8.0 Limitations of Use:

8.1 The panel supports shall be 14 gauge minimum.
8.2 Maximum support spacing shall not be exceeded.
8.3 The panels shall be supported by structural framing members complying with the Miami-Dade (Florida High velocity zone) code.
8.4 Panel shall not be used as axial load bearing components and shall not be intended / designed to act as a diaphragm.
8.5 The engineer of record or architect shall verify that the supporting structure is capable of resisting the superimposed loads from the wall panel system and that the supporting structure is capable of providing lateral stability to carry the wind loads to the building foundation.

9.0 Code Compliance

9.1 Product meets the High Velocity Hurricane Zone (HVHZ) Requirements of the Florida Building Code, 7th Edition (2020) and 8th Edition (2023) for the properties evaluated.

10.0 Identification:

10.1 Each Panel shall bear a permanent label with the manufacturer's name or logo, manufacturing plant's city, state and the statement reading "Miami-Dade County Product Control Approved" is to be located on each panel.

11.0 Reference Data:

11.1 TAS 201, 202 & 203 – Large Missile Impact Test, Air Infiltration Test, Uniform Static Air Pressure Test & Water Resistant Test. & Cyclic Wind Pressure Loading, respectively.
Report No.: T151-15 Report Date: 3/31/15
By: Farabaugh Engineering & Testing, Inc.

11.2 TAS 201, 202 & 203 – Large Missile Impact Test, Air Infiltration Test, Uniform Static Air Pressure Test & Water Resistant Test. & Cyclic Wind Pressure Loading, respectively.
Report No.: T152-15 Report Date: 3/31/15
By: Farabaugh Engineering & Testing, Inc.

11.3 TAS 201, 202 & 203 – Large Missile Impact Test, Air Infiltration Test, Uniform Static Air Pressure Test & Water Resistant Test. & Cyclic Wind Pressure Loading, respectively.
Report No.: T153-15 Report Date: 3/31/15
By: Farabaugh Engineering & Testing, Inc.

11.4 ASTM E 84 – Flame Spread Index /Smoke Density
Report Number: 100151273CO-001 Report Date: 12/10/10, Revision Date: 11/2/11
By: Intertek

APPROVED
as complying with the Florida Building Code
Acceptance No. 23-1024.07
Expiration Date 02/04/2026
By
Miami Dade Product Control

JAMES L. BUCKNER
LICENSE
No 31242
STATE OF FLORIDA
PROFESSIONAL ENGINEER
10/15/23

KINGSPAN "KS SERIES" INSULATED STEEL WALL PANEL ENGINEERING REPORT			
CBUCK Engineering Specialty Structural Engineering CBUCK, Inc. COA #8064 www.cbuckinc.net (561) 491-9927 1374 Community Dr. Jupiter, FL 33458	MANUFACTURER: Kingspan Insulated Panels, Inc. 726 Summerhill Drive Deland, FL 32724	DATE: 10 / 15 / 23 PAGE #: 4 OF 10 REPORT #: 23-588-KS Series-ER PROJECT #: 20-205 & 23-588 DRAWN BY: YD REV. 5: 10 / 15 / 23	

12.0 Product Components:

12.1 KS Series Insulated Metal Wall Panel

(A) Panel Exterior Face

The panel has a steel face. The panel exterior face is available in various architectural finishes & profiles.

12.1.1	Material:	Steel
12.1.2	Thickness:	26 Gauge (t = 0.018 in Min.)
12.1.3	Yield Strength:	47.2 ksi Minimum
12.1.4	Corrosion Resistance:	Aluminum Zinc coated Steel per ASTM A792 AZ50 Or Galvanized Steel per ASTM A653 G-90

(B) Panel Core

The Core is either: Foamed-in-Place Polyisocyanurate (PIR)
or Quadcore rigid foam insulation

12.1.5	Density of Foam:	2.2 pcf

(C) Panel Interior Face

The panel has a steel face. The panel interior face is available in various finishes.

12.1.6	Material	Steel
12.1.7	Thickness:	26 Gauge (t = 0.018 in Min.)
12.1.8	Yield Strength:	47.2 ksi Minimum
12.1.9	Corrosion Resistance:	Aluminum Zinc coated Steel per ASTM A792 AZ50 Or Galvanized Steel per ASTM A653 G-90

12.2 Hidden Fastener Clip:

This is the standard clip used between panels to secure the panel to the steel support

12.2.1	Material:	Stainless Steel
12.2.2	Thickness:	12 Gauge
12.2.3	Nominal Dimension:	2.25" Long × 0.75" Wide
12.2.4	Corrosion Resistance:	Stainless per ASTM A240

PRODUCT REVISED
as complying with the Florida
Building Code
Acceptance No 23-1024.07
Expiration Date 02/04/2026
By Miami Dade Product Control

12.3 Clip Fasteners:

This fastener is used to attach the panel to the steel support at the panel seam

12.3.1	Type:	HWH TEK 3 Self-drilling Screw
12.3.2	Size:	#1/4" - 14 1/2" Minimum penetration through support flange
12.3.3	Head:	Hex head

12.4 Intermediate Fasteners:

This fastener is used to attach the interior face of the panel to the steel support

12.4.1	Type:	Fab-Lock Screw
12.4.2	Size:	#10 – 4 × 1"

JAMES L. BUCKNER
LICENSE
No 31242
STATE OF FLORIDA
PROFESSIONAL ENGINEER
10/15/23

KINGSPAN INSULATED PANELS, INC.
"KS Series" INSTALLATON DRAWINGS

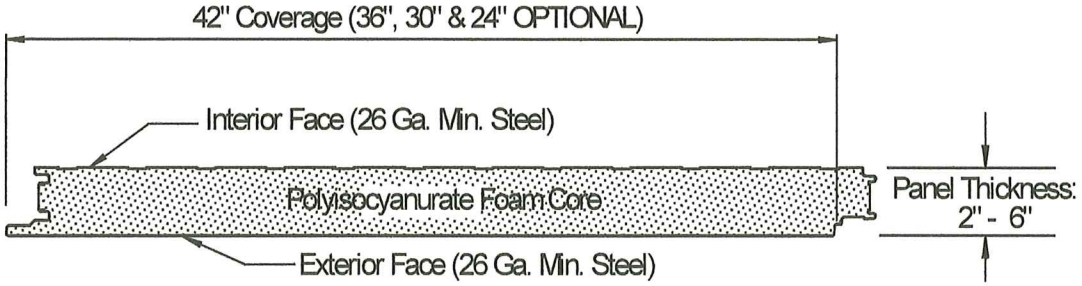

ProfileProfile

PRODUCT REVISED
as complying with the Florida
Building Code
Acceptance No 23-1024.07
Expiration Date 02/04/2026
By
Miami Dade Product Control

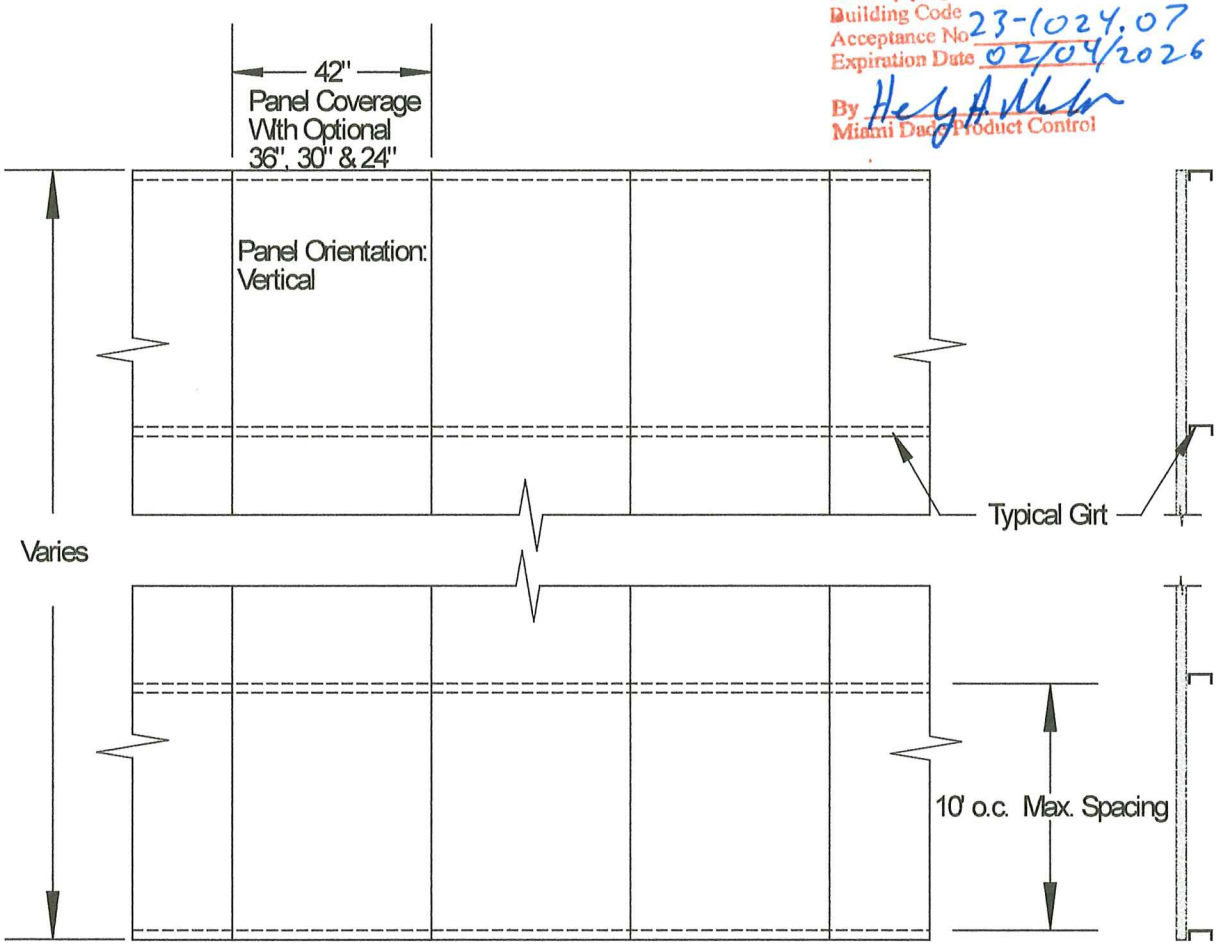

Typical Elevation View
Outside of Wall Assembly to Horizontal Supports

Typical Section View

JAMES L. BUCKNER
LICENSE
No 31242
STATE OF
FLORIDA
PROFESSIONAL ENGINEER
10/15/23

KINGSPAN "KS SERIES" INSULATED STEEL WALL PANEL
ENGINEERING REPORT

CBUCK Engineering Specialty Structural Engineering CBUCK, Inc. COA #8064 www.cbuckinc.net (561) 491-9927 1374 Community Dr. Jupiter, FL 33458	MANUFACTURER: Kingspan Insulated Panels, Inc. 726 Summerhill Drive Deland, FL 32724	DATE: 10 / 15 / 23 PAGE #: 6 OF 10 REPORT #: 23-588-KS Series-ER PROJECT #: 20-205 & 23-588 DRAWN BY: YD REV. 5: 10 / 15 / 23

KINGSPAN INSULATED PANELS, INC.
"KS Series" INSTALLATON DRAWINGS

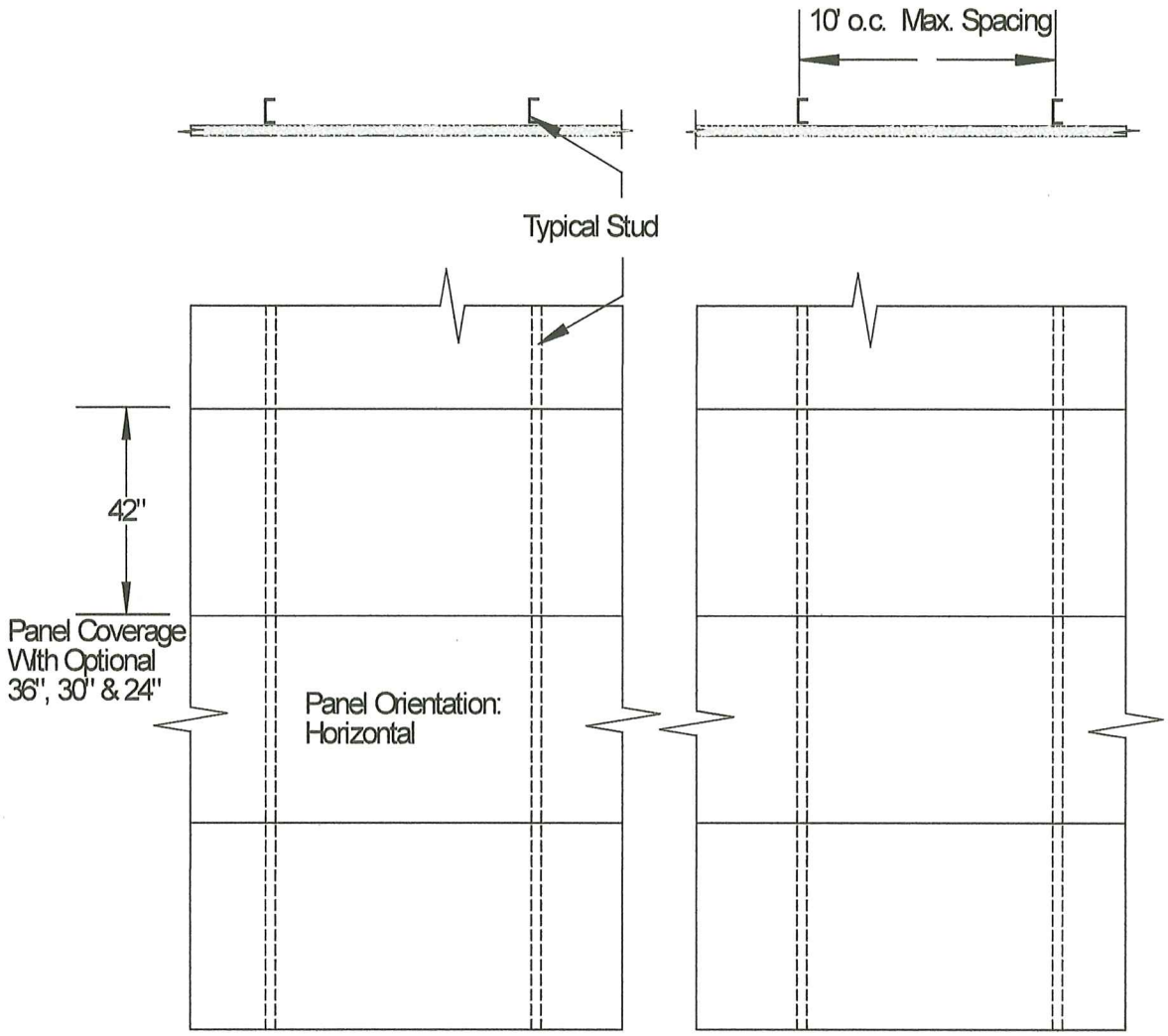

Typical Elevation View
Outside of Wall Assembly to Vertical Supports

PRODUCT REVISED
as complying with the Florida
Building Code
Acceptance No 23-1024.07
Expiration Date 02/04/2026
By
Miami Dade Product Control

JAMES L. BUCKNER
LICENSE
No 31242
STATE OF
FLORIDA
PROFESSIONAL ENGINEER
10/15/23

KINGSPAN "KS SERIES" INSULATED STEEL WALL PANEL
ENGINEERING REPORT

CBUCK Engineering
Specialty Structural Engineering
CBUCK, Inc. COA #8064
www.cbuckinc.net
(561) 491-9927
1374 Community Dr.
Jupiter, FL 33458

MANUFACTURER:
Kingspan Insulated Panels, Inc.
726 Summerhill Drive
Deland, FL 32724

DATE:	10 / 15 / 23
PAGE #:	7 OF 10
REPORT #:	23-588-KS Series-ER
PROJECT #:	20-205 & 23-588
DRAWN BY:	YD
REV. 5:	10 / 15 / 23

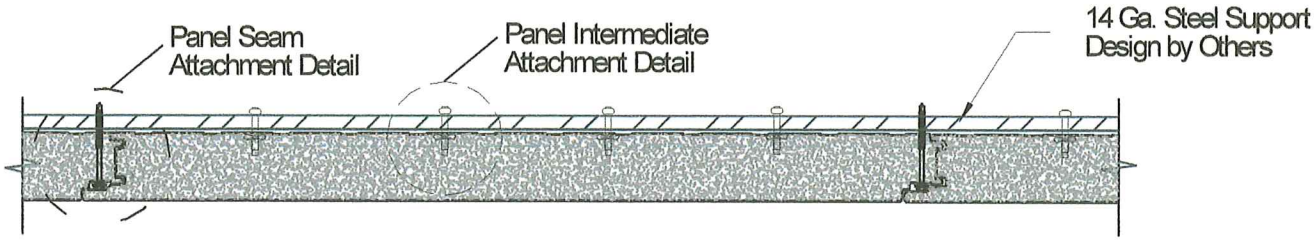

Typical Panel Attachment for Both Horizontal & Vertical Supports

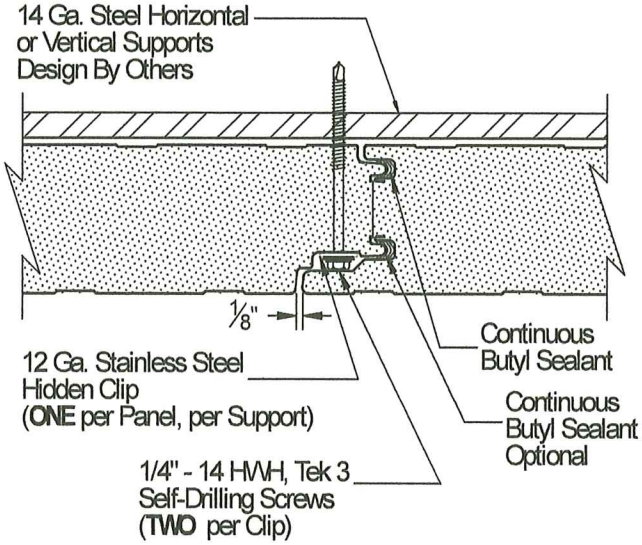

PRODUCT REVISED
as complying with the Florida
Building Code
Acceptance No 23-1024.07
Expiration Date 02/04/2026
By
Miami Dade Product Control

Typical Panel Joint Section View
Clip & Fasteners at Panel Seam to Both Horizontal & Vertical Supports

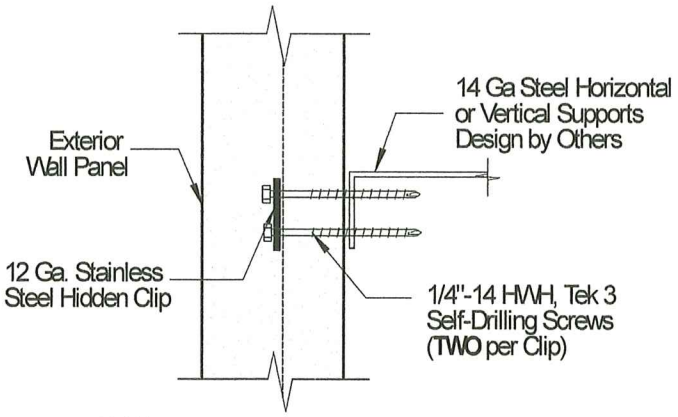

Typical Side Section View
Clip & Fasteners at Panel Seam to Support

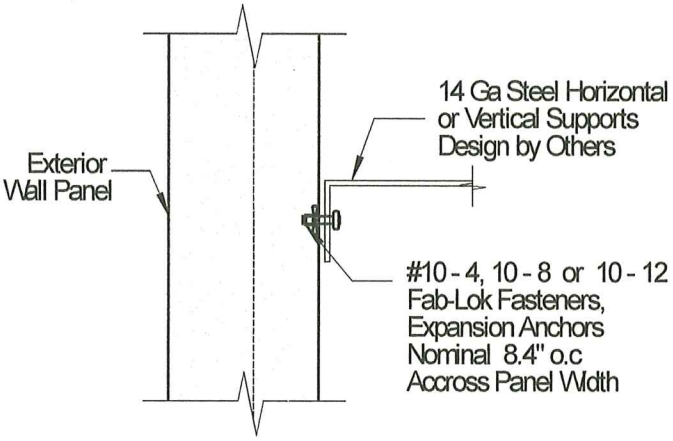

Typical Side Section View
Panel Intermediate Attachment Support

JAMES L. BUCKNER
LICENSE
No 31242
STATE OF FLORIDA
PROFESSIONAL ENGINEER
10/15/23

KINGSPAN "KS SERIES" INSULATED STEEL WALL PANEL ENGINEERING REPORT			
CBUCK Engineering Specialty Structural Engineering CBUCK, Inc. COA #8064 www.cbuckinc.net (561) 491-9927 1374 Community Dr. Jupiter, FL 33458	MANUFACTURER: Kingspan Insulated Panels, Inc. 726 Summerhill Drive Deland, FL 32724	DATE: 10 / 15 / 23 PAGE #: 8 OF 10 REPORT #: 23-588-KS Series-ER PROJECT #: 20-205 & 23-588 DRAWN BY: YD REV. 5: 10 / 15 / 23	

KINGSPAN INSULATED PANELS, INC.
"KS Series" INSTALLATON DRAWINGS

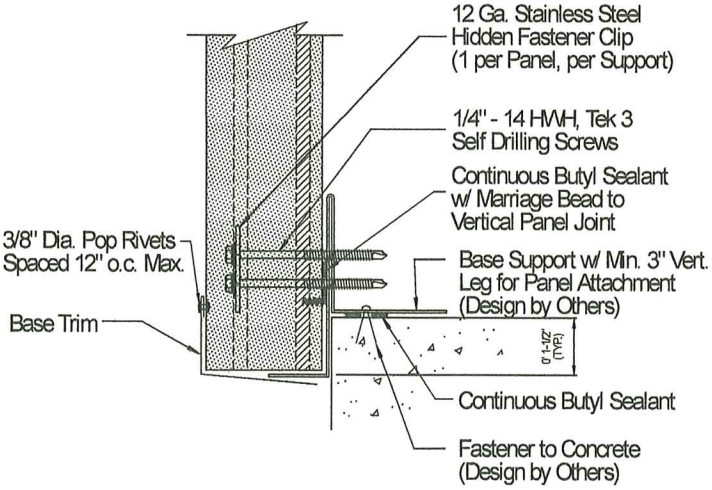

Typical Base condition
For Panel Installed Vertically to Horizontal supports

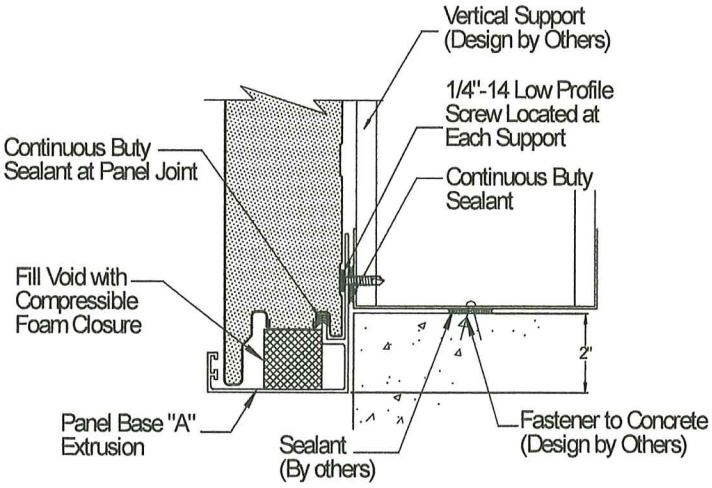

Typical Base condition
For Panel Installed Horizontally to Vertical supports

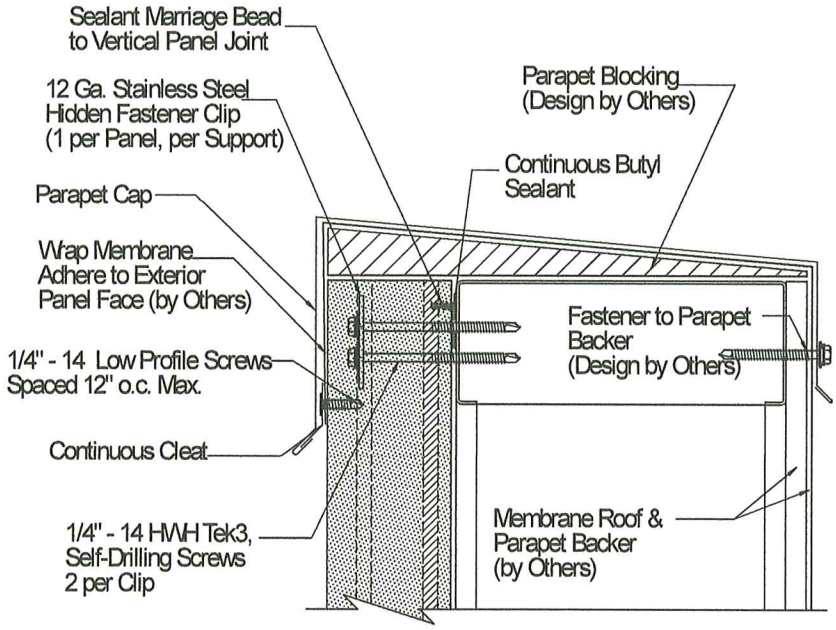

Typical Top condition
For Panels Installed to Both Horizontal and Vertical Supports

PRODUCT REVISED
as complying with the Florida
Building Code
Acceptance No 23-1024.07
Expiration Date 02/04/2026
By
Miami Dade Product Control

NOTES:
1. SUPPLEMENTAL ATTACHMENT DETAILS DESIGNED BY OTHERS
2. REFER TO MANUFACTURER FOR FASTENER, CAULKING SPECIFICATIONS & SUPPLEMENTAL ATTACHMENT DETAILS

JAMES L. BUCKNER
LICENSE
No 31242
STATE OF FLORIDA
PROFESSIONAL ENGINEER
10/15/23

KINGSPAN "KS SERIES" INSULATED STEEL WALL PANEL
ENGINEERING REPORT

CBUCK Engineering
Specialty Structural Engineering
CBUCK, Inc. COA #8064
www.cbuckinc.net
(561) 491-9927
2637 E. Atlantic Blvd, # 34026
Pompano Beach, FL 33062

MANUFACTURER:
Kingspan Insulated Panels, Inc.
726 Summerhill Drive
Deland, FL 32724

DATE:	10 / 8 / 15
PAGE #:	9 OF 10
REPORT #:	14-143-KS Series-ER.1
PROJECT #:	14-143
DRAWN BY:	YD
REV. 2:	1 / 26 / 16

KINGSPAN INSULATED PANELS, INC.
"KS Series" INSTALLATON DRAWINGS

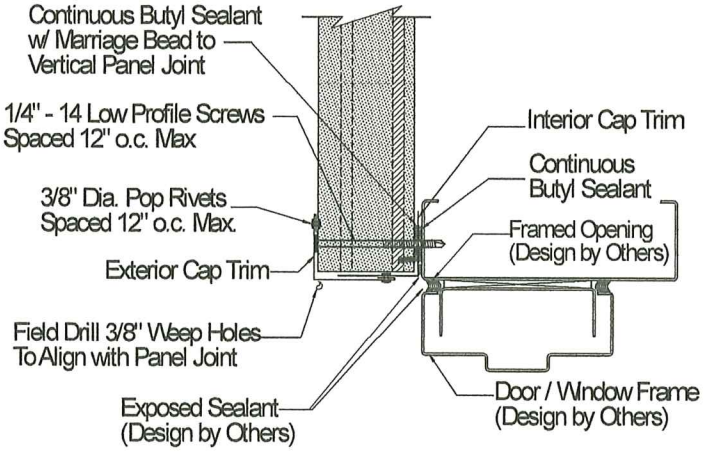

Typical Head Condition

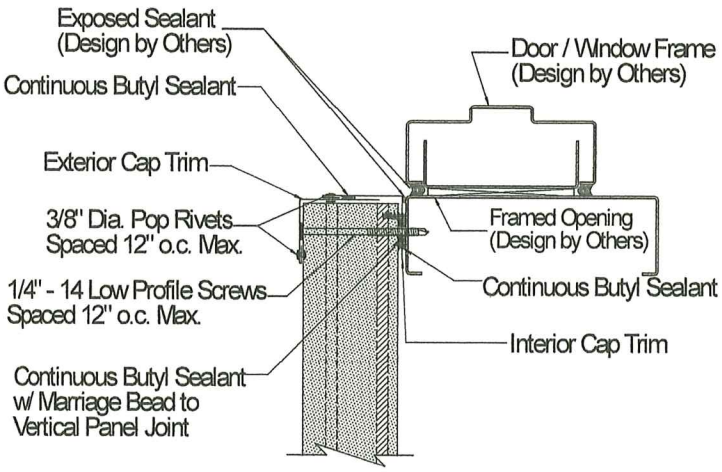

Typical Sill Condition

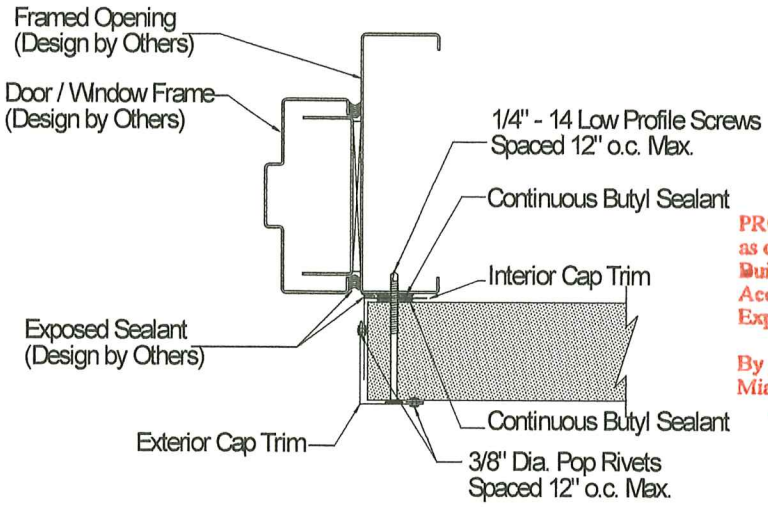

Typical Jamb Condition

PRODUCT REVISED
as complying with the Florida Building Code
Acceptance No 23-1024.07
Expiration Date 02/04/2026
By
Miami Dade Product Control

NOTES:
3. SUPPLEMENTAL ATTACHMENT DETAILS DESIGNED BY OTHERS
4. REFER TO MANUFACTURER FOR FASTENER, CAULKING SPECIFICATIONS & SUPPLEMENTAL ATTACHMENT DETAILS

JAMES L. BUCKNER
LICENSE
No 31242
STATE OF FLORIDA
PROFESSIONAL ENGINEER
10/15/23

KINGSPAN "KS SERIES" INSULATED STEEL WALL PANEL
ENGINEERING REPORT

CBUCK Engineering
Specialty Structural Engineering
CBUCK, Inc. COA #8064
www.cbuckinc.net
(561) 491-9927
2637 E. Atlantic Blvd, # 34026
Pompano Beach, FL 33062

MANUFACTURER:
Kingspan Insulated Panels, Inc.
726 Summerhill Drive
Deland, FL 32724

DATE:	10 / 8 / 15
PAGE #:	10 OF 10
REPORT #:	14-143-KS Series-ER.1
PROJECT #:	14-143
DRAWN BY:	YD
REV. 2:	1 / 26 / 16