MIAMI-DADE COUNTY
DEPARTMENT OF REGULATORY AND ECONOMIC RESOURCES (RER)
BOARD AND CODE ADMINISTRATION DIVISION

MIAMI-DADE COUNTY
PRODUCT CONTROL SECTION
11805 SW 26 Street, Room 208
Miami, Florida 33175-2474
T (786) 315-2590 F (786) 315-2599
www.miamidade.gov/economy

NOTICE OF ACCEPTANCE (NOA)

Hardware and Glass Group LLC
8 the Green Salte #7407
Dover, Delaware 19901

SCOPE:
This NOA is being issued under the applicable rules and regulations governing the use of construction materials. The documentation submitted has been reviewed and accepted by Miami-Dade County RER-Product Control Section to be used in Miami Dade County and other areas where allowed by the Authority Having Jurisdiction (AHJ).

This NOA shall not be valid after the expiration date stated below. The Miami-Dade County Product Control Section (In Miami Dade County) and/or the AHJ (in areas other than Miami Dade County) reserve the right to have this product or material tested for quality assurance purposes. If this product or material fails to perform in the accepted manner, the manufacturer will incur the expense of such testing and the AHJ may immediately revoke, modify, or suspend the use of such product or material within their jurisdiction. RER reserves the right to revoke this acceptance if it is determined by Miami-Dade County Product Control Section that this product or material fails to meet the requirements of the applicable building code.

This product is approved as described herein and has been designed to comply with the High Velocity Hurricane Zone of the Florida Building Code.

DESCRIPTION: "Series BR68, BR86, BR78, & BR80" Aluminum Glazed Railing System

APPROVAL DOCUMENT: Drawing No. BR68-T3680, titled "Series BR68 Railing System with Laminated Glass", 5 sheets, and Drawing No. BR86-T3680, titled "Series BR86 Railing System with Laminated Glass", 5 sheets, and Drawing No. BR78-T3680, titled "Series BR78 Railing System with Laminated Glass", 4 sheets, and Drawing No. BR80-T3680, titled "Series BR80 Railing System with Laminated Glass", 4 sheets, prepared by Building Drops, signed and sealed by Hermes F. Norero, P.E., on 03/04/2024, bearing the Miami-Dade County Product Control Revision stamp with the Notice of Acceptance number and the expiration date by the Miami-Dade County Product Control Section.

MISSILE IMPACT RATING: Large and Small Missile Impact Resistant

LABELING: Each unit shall bear a permanent label with the manufacturer's name or logo, city, state and the following statement: "Miami-Dade County Product Control Approved", unless otherwise noted herein.

RENEWAL of this NOA shall be considered after a renewal application has been filed and there has been no change in the applicable building code negatively affecting the performance of this product.

TERMINATION of this NOA will occur after the expiration date or if there has been a revision or change in the materials, use, and/or manufacture of the product or process. Misuse of this NOA as an endorsement of any product, for sales, advertising or any other purposes shall automatically terminate this NOA. Failure to comply with any section of this NOA shall be cause for termination and removal of NOA.

ADVERTISEMENT: The NOA number preceded by the words Miami-Dade County, Florida, and followed by the expiration date may be displayed in advertising literature. If any portion of the NOA is displayed, then it shall be done in its entirety.

INSPECTION: A copy of this entire NOA shall be provided to the user by the manufacturer or its distributors and shall be available for inspection at the job site at the request of the Building Official. The structural adequacy of the supporting structures is not part of this approval & shall be reviewed by the corresponding Building Dept.

This NOA **revises NOA #22-1011.01** and consists of this page 1, evidence submitted pages E-1 and E-2 as well as approval document mentioned above.
The submitted documentation was reviewed by **Helmy A. Makar, P.E., M.S.**

MIAMI-DADE COUNTY APPROVED

Helmy A. Makar
05/23/24

NOA No. 24-0319.07
Expiration Date: 09/09/2026
Approval Date: 05/23/2024

NOTICE OF ACCEPTANCE: EVIDENCE SUBMITTED

1. EVIDENCE SUBMITTED UNDER PREVIOUS APPROVAL #21-0312.07

A. DRAWINGS

1. *Drawing No. BR68-T3680, titled "Series BR68 Railing System with Laminated Glass", sheets 1 through 5 and Drawing No. BR86-T3680, titled "Series BR86 Railing System with Laminated Glass", sheets 1 through 5, prepared by Building Drops, dated July 16, 2021, signed and sealed by Hermes F. Norero, P.E.*

B. TESTS

1. *Test Report No.* ***BT-HWG-19001****, by Blackwater Testing, Inc., dated 12/06/2019, signed & sealed by Constantin Bortes, P.E., testing Glass Railing for concentrated and distributed loads per FBC 1618.4.6, Impacts per ANSI Z97.1, Impacts per TAS 201-94 and Static Wind Load per TAS 202-94.*

C. CALCULATIONS

1. *Calculation titled "BR68 Railing System with Laminated Glass", dated July 15, 2021, prepared by Building Drops, signed and sealed by Hermes F. Norero, P.E.*
2. *Calculation titled "BR86 Railing System with Laminated Glass", dated July 15, 2021, prepared by Building Drops, signed and sealed by Hermes F. Norero, P.E.*

D. QUALITY ASSURANCE

1. *By Miami-Dade County Department of Regulatory and Economic Resources.*

E. MATERIAL CERTIFICATIONS

1. *None.*

F. STATEMENTS

1. ***Florida Building Code, 2020 Edition Compliance Letter*** *prepared by Building Drops, signed and sealed by Hermes F. Norero, P.E., on July 15, 2021.*

2. EVIDENCE SUBMITTED UNDER PREVIOUS APPROVAL #22-1011.01

A. DRAWINGS

1. *Drawing No. BR68-T3680, titled "Series BR68 Railing System with Laminated Glass", 5 sheets, and Drawing No. BR86-T3680, titled "Series BR86 Railing System with Laminated Glass", 5 sheets, and Drawing No. BR78-T3680, titled "Series BR78 Railing System with Laminated Glass", 4 sheets, and Drawing No. BR80-T3680, titled "Series BR80 Railing System with Laminated Glass", 4 sheets, prepared by Building Drops, signed and sealed by Hermes F. Norero, P.E., on 09/16/2022.*

B. TESTS

1. *None.*

Helmy A. Makar, P.E., M.S.
Product Control Section Supervisor
NOA No. 24-0319.07
Expiration Date: 09/09/2026
Approval Date: 05/23/2024

C. CALCULATIONS

1. *Comparison calculation to justify "BR78 and BR80 Railing System with Laminated Glass", dated 12/02/22, prepared by Building Drops, signed by Spencer Moore.*

D. QUALITY ASSURANCE

1. *By Miami-Dade County Department of Regulatory and Economic Resources.*

E. MATERIAL CERTIFICATIONS

1. *None.*

F. STATEMENTS

1. ***Florida Building Code, 2020 Edition Compliance Letter** prepared by Building Drops, signed and sealed by Hermes F. Norero, P.E., on July 15, 2021.*

3. NEW EVIDENCE SUBMITTED

A. DRAWINGS

1. *Drawing No. BR68-T3680, titled "Series BR68 Railing System with Laminated Glass", 5 sheets, and Drawing No. BR86-T3680, titled "Series BR86 Railing System with Laminated Glass", 5 sheets, and Drawing No. BR78-T3680, titled "Series BR78 Railing System with Laminated Glass", 4 sheets, and Drawing No. BR80-T3680, titled "Series BR80 Railing System with Laminated Glass", 4 sheets, prepared by Building Drops, signed and sealed by Hermes F. Norero, P.E., on 03/04/2024.*

B. TESTS

1. *None.*

C. CALCULATIONS

1. *None.*

D. QUALITY ASSURANCE

1. *By Miami-Dade County Department of Regulatory and Economic Resources.*

E. MATERIAL CERTIFICATIONS

1. *None.*

F. STATEMENTS

1. ***Florida Building Code, 2023 Edition Compliance Letter** prepared by Building Drops, signed and sealed by Hermes F. Norero, P.E., on 03/04/2024.*

Helmy A. Makar, P.E., M.S.
Product Control Section Supervisor
NOA No. 24-0319.07
Expiration Date: 09/09/2026
Approval Date: 05/23/2024

BR68 RAILING SYSTEM WITH LAMINATED GLASS

GENERAL NOTES:

1. THE PRODUCT SHOWN HEREIN IS DESIGNED AND MANUFACTURED TO COMPLY WITH THE 8TH (2023) EDITION FLORIDA BUILDING CODE (FBC), INCLUDING HVHZ.
2. PRODUCT IS RATED FOR SMALL AND LARGE MISSILE IMPACT.
3. ANCHORS SHALL BE CORROSION RESISTANT, SPACED AS SHOWN ON THE DETAILS AND INSTALLED PER MANUFACTURER'S SPECIFICATIONS. SPECIFIED EMBEDMENT TO BASE MATERIALS SHALL BE BEYOND FLOOR DRESSING.
4. THE INSTALLATION DETAILS DESCRIBED HEREIN ARE GENERIC AND MAY NOT REFLECT ACTUAL CONDITIONS FOR A SPECIFIC SITE. IF SITE CONDITIONS CAUSE INSTALLATION TO DEVIATE FROM THE REQUIREMENTS DETAILED HEREIN, A LICENSED ENGINEER OR ARCHITECT SHALL PREPARE SITE SPECIFIC DOCUMENTS FOR USE WITH THIS DOCUMENT IN NON-HVHZ AREAS. IN HVHZ AREAS, ONE TIME PRODUCT APPROVAL TO BE OBTAINED FROM MIAMI DADE RER OR AHJ.
5. ADEQUACY OF THE EXISTING STRUCTURAL CONCRETE SUBSTRATE AS A MAIN WIND FORCE RESISTING SYSTEM CAPABLE OF WITHSTANDING AND TRANSFERRING APPLIED PRODUCT LOADS TO THE FOUNDATION IS THE RESPONSIBILITY OF THE ENGINEER OR ARCHITECT OF RECORD FOR THE PROJECT OF INSTALLATION.
6. THE DESIGN LOADS SHOWN IN THIS DOCUMENT ARE ALLOWABLE DESIGN LOADS.
7. GLASS MEETS THE REQUIREMENTS OF ASTM E1300

INSTRUCTIONS FOR USE:

1. DETERMINE DESIGN WIND LOAD REQUIREMENTS BASED ON WIND VELOCITY, BUILDING HEIGHT, WIND ZONE, USING APPLICABLE ASCE 7 STANDARD.
2. SEE CHARTS ON SHEETS 3 FOR DESIGN LOAD CAPACITY OF DESIRED GLASS SIZE AND THE MAXIMUM RAILING HEIGHT BASED ON THE CONCENTRATED AND DISTRIBUTED LIVE LOADS.
3. SEE ANCHOR SPECIFICATIONS ON SHEET 3.

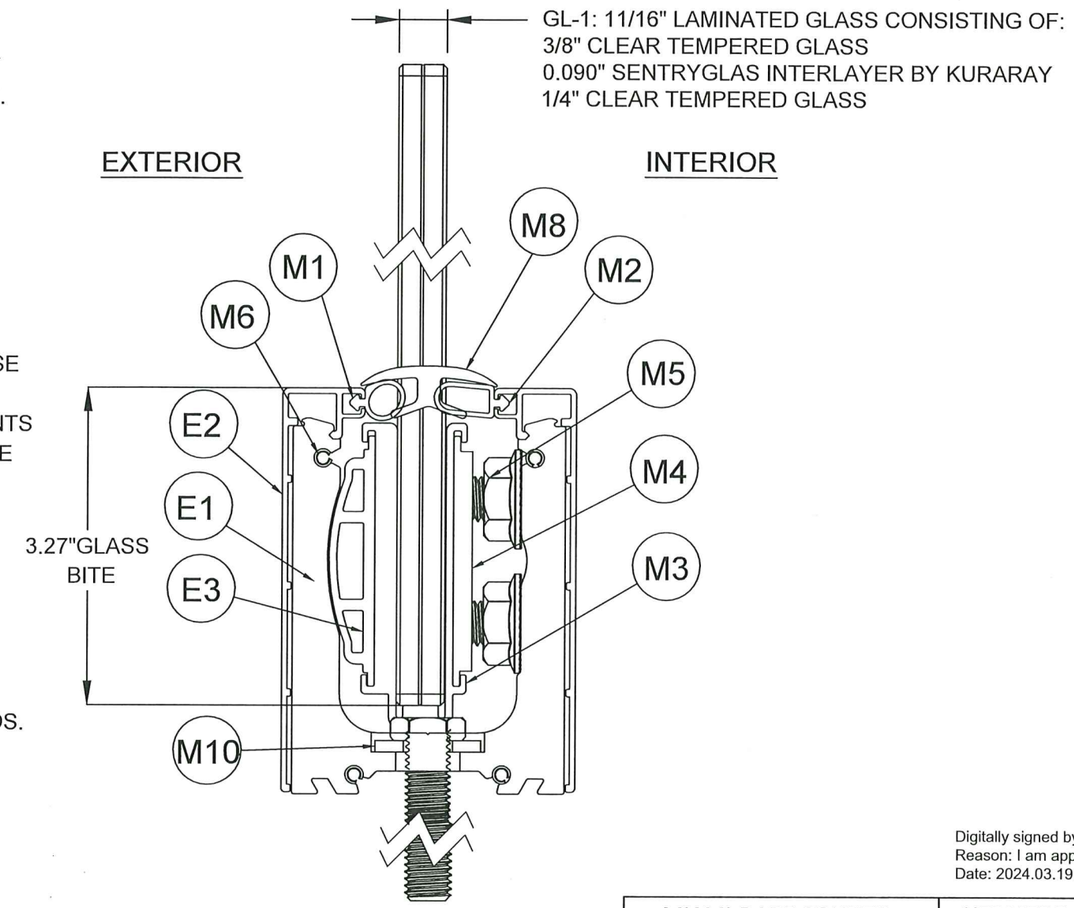

GL-1 GLAZING DETAIL

Digitally signed by Hermes F. Norero, P.E.
Reason: I am approving this document
Date: 2024.03.19 12:57:37 +01'00'

MIAMI-DADE COUNTY

PRODUCT REVISED
as complying with the Florida
Building Code
Acceptance No 24-0319.07
Expiration Date 09/09/2026
By
Miami Dade Product Control

HERMES F. NORERO, P.E.
FLORIDA PE LIC. NO. 73778

HERMES F. NORERO
LICENSE
No. 73778
STATE OF
FLORIDA
PROFESSIONAL ENGINEER

Channel Manufacturer
E-mail: wayne@hardwareandglass.com
Phone: +86 13727117405
Address: City Garden, 55 Lianjiang Road, Qingyuan City, Guangdong, China

H&G
HARDWARE AND GLASS GROUP LLC
E-mail: wayne@hardwareandglass.com
Phone: 3236475800
Address: 8 The Green Suite #7407 Dover, DE 19901

Drawing Spec.	A4	WEIGHT(KG)		Drawn by	Michael	Drawn NO.
Projection		Date	2020/02/12	Auditing by		BR68-T3680-1
Page	1 OF 5	RE Date		Approved by		

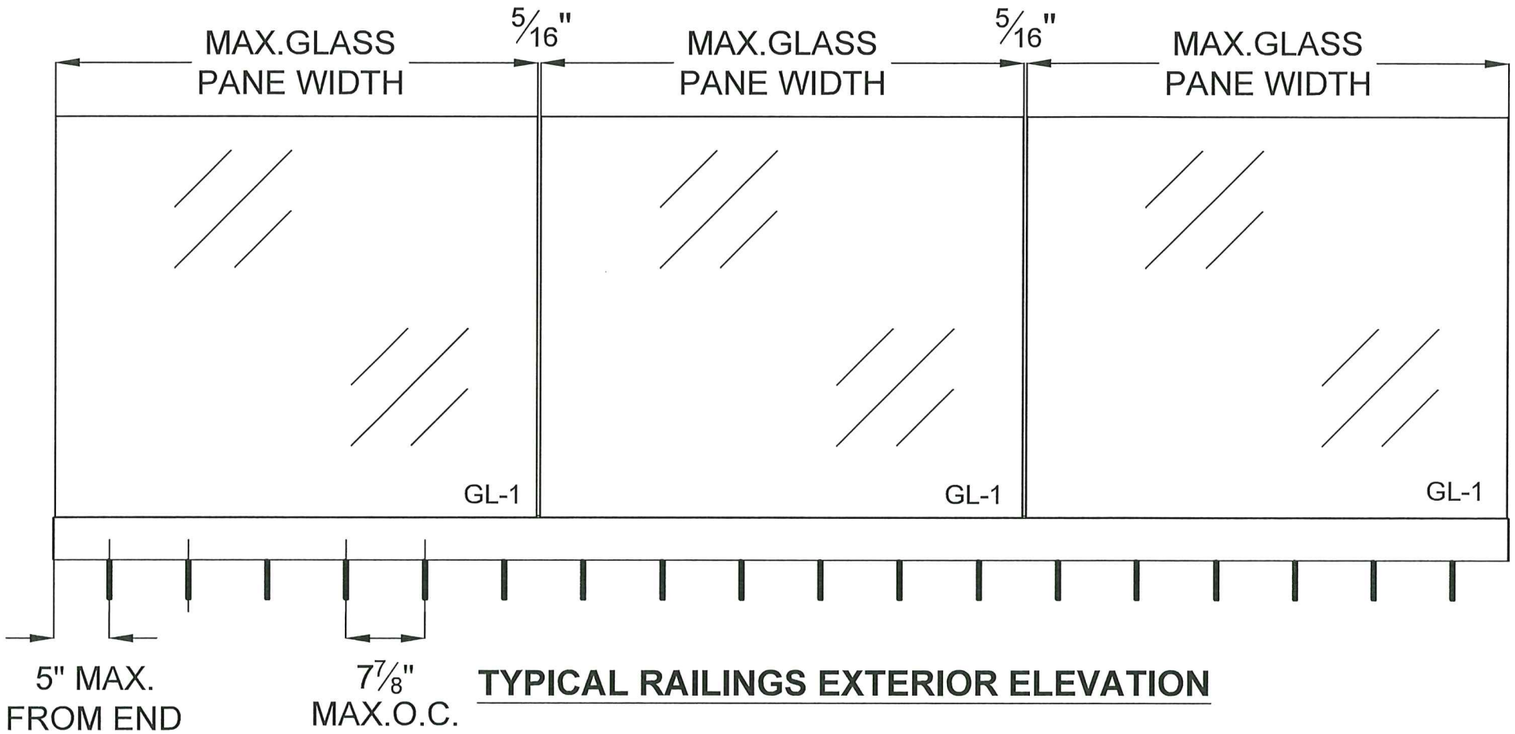

TYPICAL RAILINGS EXTERIOR ELEVATION

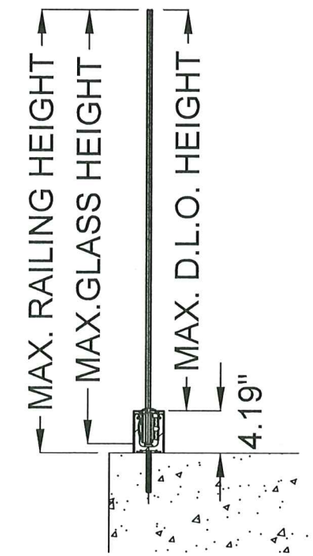

TYPICAL RAILINGS SECTION

TYPICAL RAILINGS TOP VIEW

MIAMI-DADE COUNTY

PRODUCT REVISED
as complying with the Florida Building Code
Acceptance No. 24-0319.07
Expiration Date 09/09/2026
By
Miami Dade Product Control

HERMES F. NORERO, P.E.
FLORIDA PE LIC. NO. 73778

HERMES F. NORERO
LICENSE
No. 73778
STATE OF FLORIDA
PROFESSIONAL ENGINEER

H&G
HARDWARE AND GLASS GROUP LLC
E-mail: wayne@hardwareandglass.com
Phone: 3236475800
Address: 8 The Green Suite #7407 Dover, DE 19901

Drawing Spec.	A4	WEIGHT(KG)		Drawn by	Michael	Drawn NO.
Projection		Date	2020/02/12	Auditing by		BR68-T3680-2
Page	2 OF 5	RE Date		Approved by		

GL-1:11/16" LAMINATED GLASS

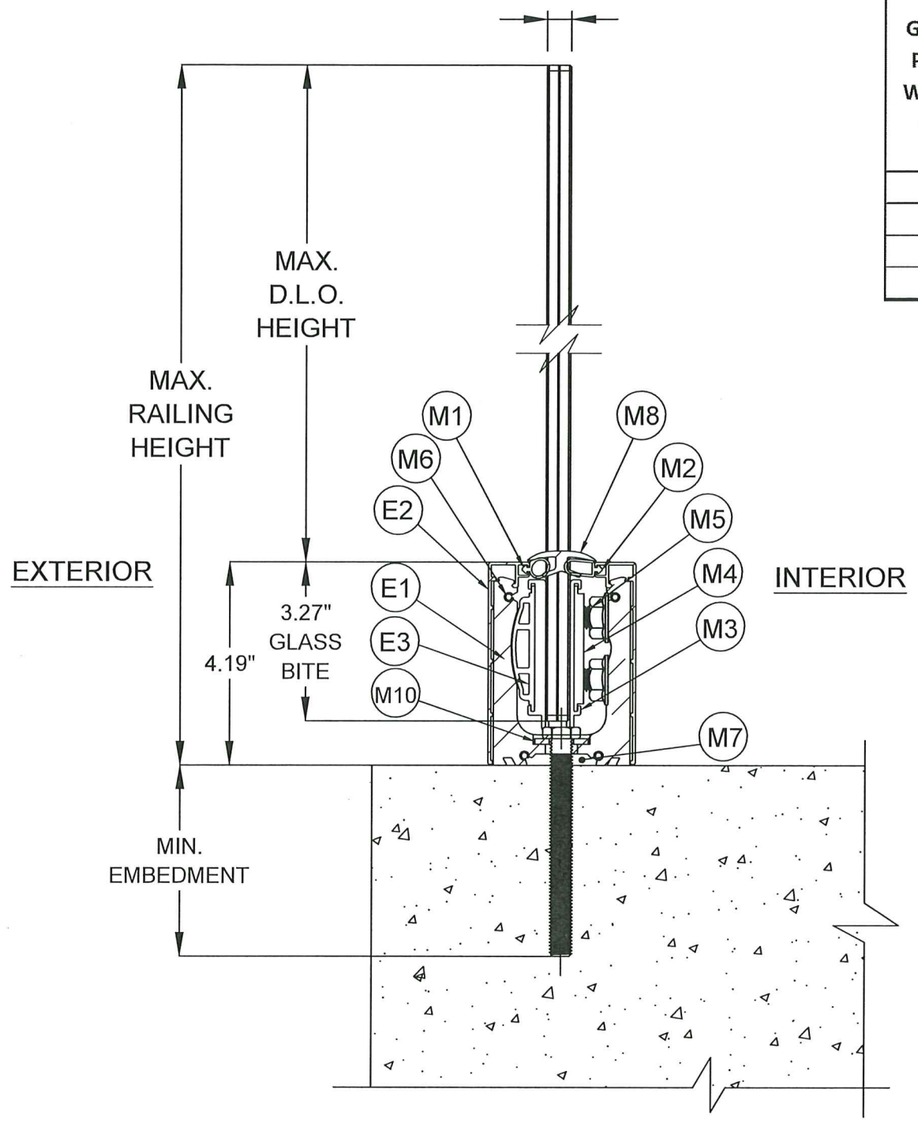

GLASS PANE WIDTH (IN)	EFFECTIVE GLASS THICKNESS		ALLOWABLE DESIGN PRESSURE (PSF)				200 LB LIVE LOAD		50 LB/FT LIVE LOAD	
	DEFLECTION (IN)	STRESS (IN)	MAX. D.L.O. HEIGHT (IN)				MAX. UNSSUPORTED GLASS HEIGHT (IN)		MAX. UNSSUPORTED GLASS HEIGHT (IN)	
			36	39.04	42	48	STRESS	DEFLECTION	STRESS	DEFLECTION
12	0.4461	0.5035	50.0	50.0	44.9	34.4	15.2	43.0	60.8	38.1
24	0.5393	0.5891	50.0	50.0	44.9	34.4	41.6	62.9	83.3	46.1
36	0.5924	0.6274	50.0	50.0	44.9	34.4	70.8	76.8	94.5	50.6
48	0.6211	0.6452	50.0	50.0	-	-	99.9	86.6	99.9	53.1

ANCHOR SPECIFICATIONS:

1. 1/2" LDT ITW RED HEAD
   4-1/2" MIN. EMBEDMENT
   4" MIN. EDGE DISTANCE
   7-7/8" MAX. SPACING
   3000 PSI MIN. CONCRETE F'c

1. 1/2" SCREW-BOLT+, DEWALT
   4-1/4" MIN. EMBEDMENT
   4" MAX. EDGE DISTANCE
   7-7/8" MAX. SPACING
   3000 PSI MIN. CONCRETE F'c

MIAMI-DADE COUNTY

PRODUCT REVISED
as complying with the Florida
Building Code
Acceptance No. 24-0318.07
Expiration Date 09/09/2026
By
Miami Dade Product Control

HERMES F. NORERO, P.E.
FLORIDA PE LIC. NO. 73778

HERMES F. NORERO
LICENSE
No. 73778
STATE OF
FLORIDA
PROFESSIONAL ENGINEER

H&G
HARDWARE AND GLASS GROUP LLC
E-mail: wayne@hardwareandglass.com
Phone: 3236475800
Address: 8 The Green Suite #7407 Dover, DE 19901

Drawing Spec.	A4	WEIGHT(KG)		Drawn by	Michael	Drawn NO.
Projection		Date	2020/02/12	Auditing by		BR68-T3680-3
Page	3 OF 5	RE Date		Approved by		

BILL OF MATERIALS

CODE	PART	DESCRIPTION	MATERIAL
E1	BR-68BD	CHANNEL	ALUMINIUM 6063-T6
E2	BR68-SCP	FULL COVER	ALUMINIUM 6063-T5/6463-T5
E3	BR68SRP	CURVE PLATE	ALUMINIUM 6063-T5
M1	BR68-R1	RUBBER	EPDM (UVSTABLE)
M2	BR68-R25	RUBBER	EPDM (UVSTABLE)
M3	BR68-RU21.6	U GASKET	TPV (UVSTABLE)
M4	BR68-PP	STAINLESS STEEL PLATE	STAINLESS STEEL 2205
M5	Flange nuts	RECOMMENDED 26 LB-FT TORQUE	STAINLESS STEEL 316
M6	BR68 CONNECT PIN	ALIGNING PIN	STAINLESS STEEL 316
M7	BR68-ECB	END CAP	ALUMINIUM 6063-T5/6463-T5
M8	BR68GCP	GLASS DIVIDER	EPDM (UVSTABLE)
M10	BR68SW	WASHER	STAINLESS STEEL 316

E1

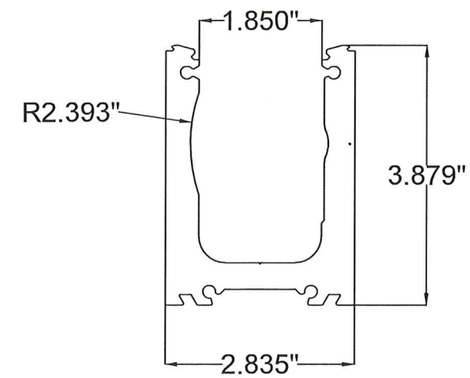

E2

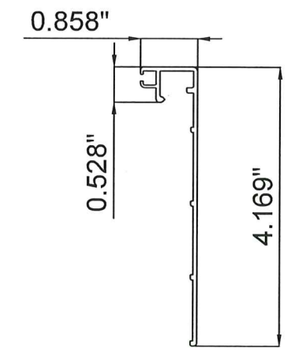

E3

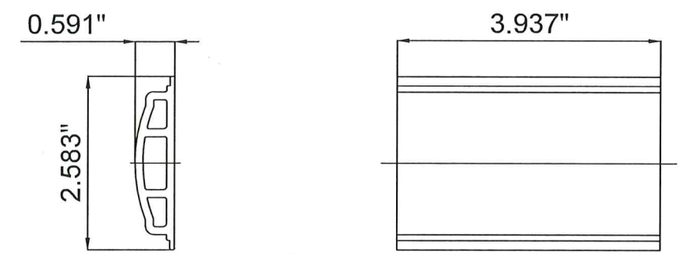

M10

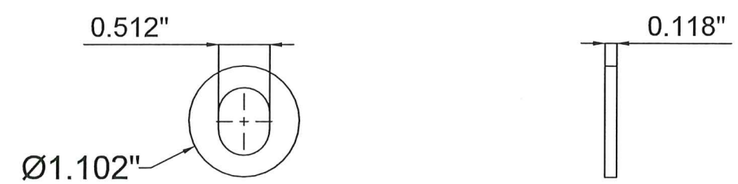

MIAMI-DADE COUNTY

PRODUCT REVISED
as complying with the Florida Building Code
Acceptance No 24-0319.07
Expiration Date 09/09/2026
By
Miami Dade Product Control

HERMES F. NORERO, P.E.
FLORIDA P.E. NO. 73778

HERMES F. NORERO
LICENSE
No. 73778
STATE OF FLORIDA
PROFESSIONAL ENGINEER

H&G
HARDWARE AND GLASS GROUP LLC
E-mail: wayne@hardwareandglass.com
Phone: 3236475800
Address: 8 The Green Suite #7407 Dover, DE 19901

Drawing Spec.	A4	WEIGHT(KG)		Drawn by	Michael	Drawn NO.
Projection		Date	2020/02/12	Auditing by		BR68-T3680-4
Page	4 OF 5	RE Date		Approved by		

M1

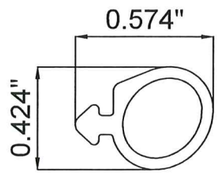

M2

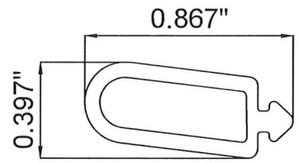

M3

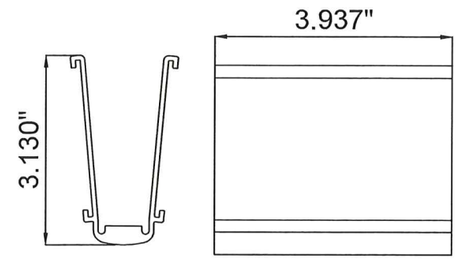

M4

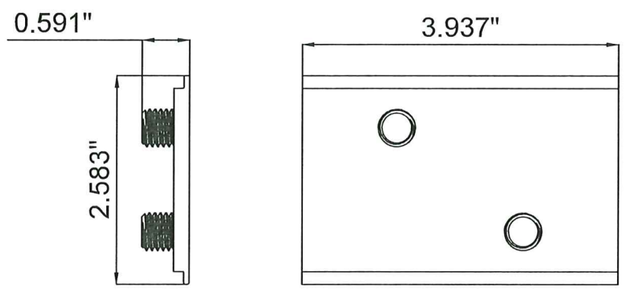

M5

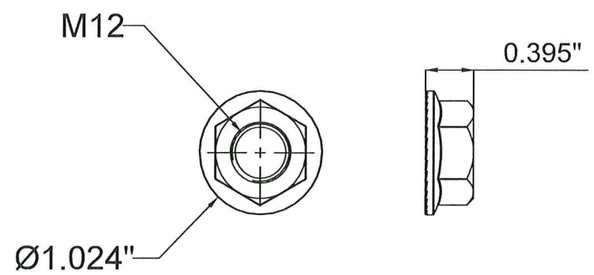

M6

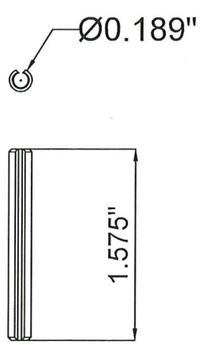

M7

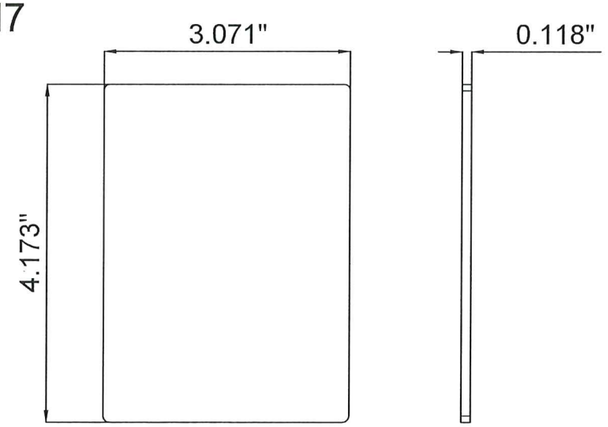

M8

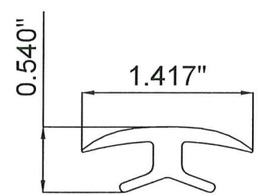

MIAMI-DADE COUNTY

PRODUCT REVISED
as complying with the Florida
Building Code
Acceptance No. 24-0319.07
Expiration Date 09/09/2026
By
Miami Dade Product Control

HERMES F. NORERO, P.E.
FLORIDA PE LIC. NO. 73778

HERMES F. NORERO
LICENSE
No. 73778
STATE OF
FLORIDA
PROFESSIONAL ENGINEER

H&G
HARDWARE AND GLASS GROUP LLC
E-mail: wayne@hardwareandglass.com
Phone: 3236475800
Address: 8 The Green Suite #7407 Dover, DE 19901

Drawing Spec.	A4	WEIGHT(KG)		Drawn by	Michael	Drawn NO.
Projection		Date	2020/02/12	Auditing by		BR68-T3680-5
Page	5 OF 5	RE Date		Approved by		

BR86 RAILING SYSTEM WITH LAMINATED GLASS

GENERAL NOTES:

1. THE PRODUCT SHOWN HEREIN IS DESIGNED AND MANUFACTURED TO COMPLY WITH THE 8TH (2023) EDITION FLORIDA BUILDING CODE (FBC), INCLUDING HVHZ.
2. PRODUCT IS RATED FOR SMALL AND LARGE MISSILE IMPACT.
3. ANCHORS SHALL BE CORROSION RESISTANT, SPACED AS SHOWN ON THE DETAILS AND INSTALLED PER MANUFACTURER'S SPECIFICATIONS. SPECIFIED EMBEDMENT TO BASE MATERIALS SHALL BE BEYOND FLOOR DRESSING.
4. THE INSTALLATION DETAILS DESCRIBED HEREIN ARE GENERIC AND MAY NOT REFLECT ACTUAL CONDITIONS FOR A SPECIFIC SITE. IF SITE CONDITIONS CAUSE INSTALLATION TO DEVIATE FROM THE REQUIREMENTS DETAILED HEREIN, A LICENSED ENGINEER OR ARCHITECT SHALL PREPARE SITE SPECIFIC DOCUMENTS FOR USE WITH THIS DOCUMENT IN NON-HVHZ AREAS. IN HVHZ AREAS, ONE TIME PRODUCT APPROVAL TO BE OBTAINED FROM MIAMI DADE RER OR AHJ.
5. ADEQUACY OF THE EXISTING STRUCTURAL CONCRETE SUBSTRATE AS A MAIN WIND FORCE RESISTING SYSTEM CAPABLE OF WITHSTANDING AND TRANSFERRING APPLIED PRODUCT LOADS TO THE FOUNDATION IS THE RESPONSIBILITY OF THE ENGINEER OR ARCHITECT OF RECORD FOR THE PROJECT OF INSTALLATION.
6. THE DESIGN LOADS SHOWN IN THIS DOCUMENT ARE ALLOWABLE DESIGN LOADS.
7. GLASS MEETS THE REQUIREMENTS OF ASTM E1300

INSTRUCTIONS FOR USE:

1. DETERMINE DESIGN WIND LOAD REQUIREMENTS BASED ON WIND VELOCITY, BUILDING HEIGHT, WIND ZONE, USING APPLICABLE ASCE 7 STANDARD.
2. SEE CHARTS ON SHEETS 3 FOR DESIGN LOAD CAPACITY OF DESIRED GLASS SIZE AND THE MAXIMUM RAILING HEIGHT BASED ON THE CONCENTRATED AND DISTRIBUTED LIVE LOADS.
3. SEE ANCHOR SPECIFICATIONS ON SHEET 3.

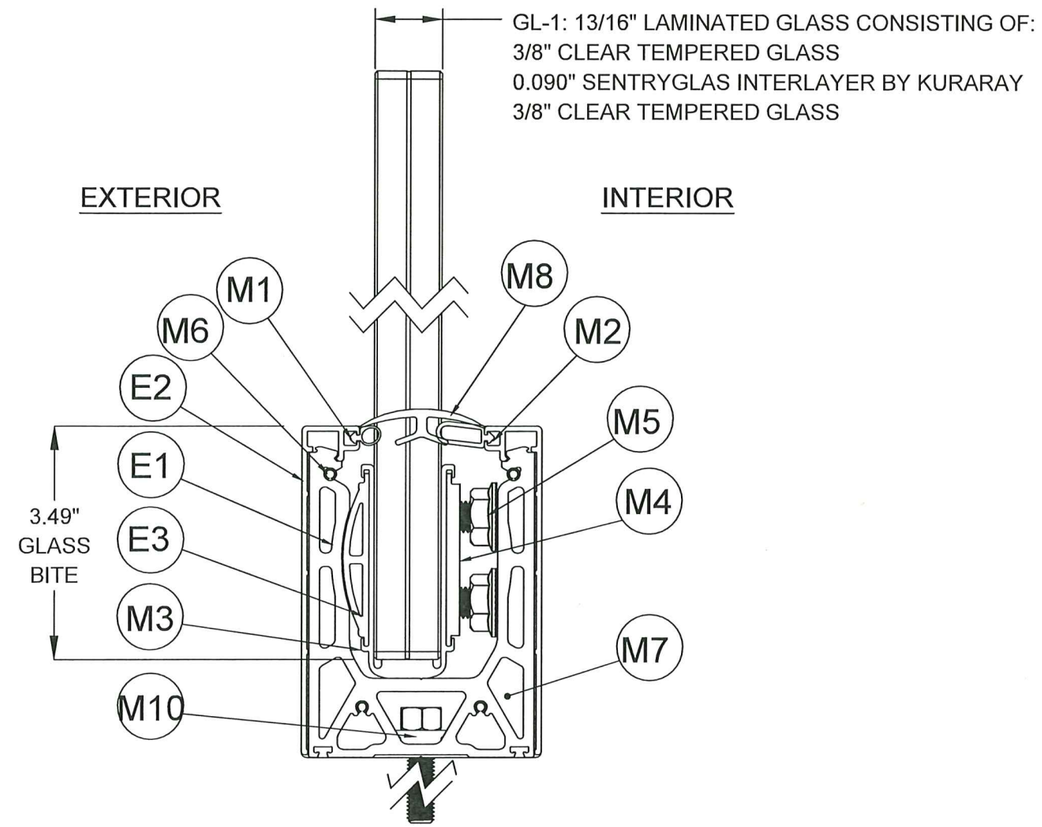

G1-L GLAZING DETAIL

MIAMI-DADE COUNTY

PRODUCT REVISED
as complying with the Florida Building Code
Acceptance No 24-0319.07
Expiration Date 09/09/2026
By
Miami Dade Product Control

HERMES F. NORERO, P.E.
FLORIDA PE NO. 73778

HERMES F. NORERO
LICENSE
No. 73778
STATE OF FLORIDA
PROFESSIONAL ENGINEER

H&G	**Channel Manufacturer** E-mail: wayne@hardwareandglass.com Phone: +8613727117405 Address: City Garden, 55 Lianjiang Road, Qingyuan City, Guangdong,China **HARDWARE AND GLASS GROUP LLC** E-mail: wayne@hardwareandglass.com Phone:3236475800 Address: 8 The Green Suite # 7407 Dover,DE 19901	Drawing Spec.	A4	WEIGHT(KG)		Drawn by	Michael	Drawn NO.
		Projection		Date	2020/02/13	Auditing by		BR86-T3680-1
		Page	1 OF 5	RE Date		Approved by		

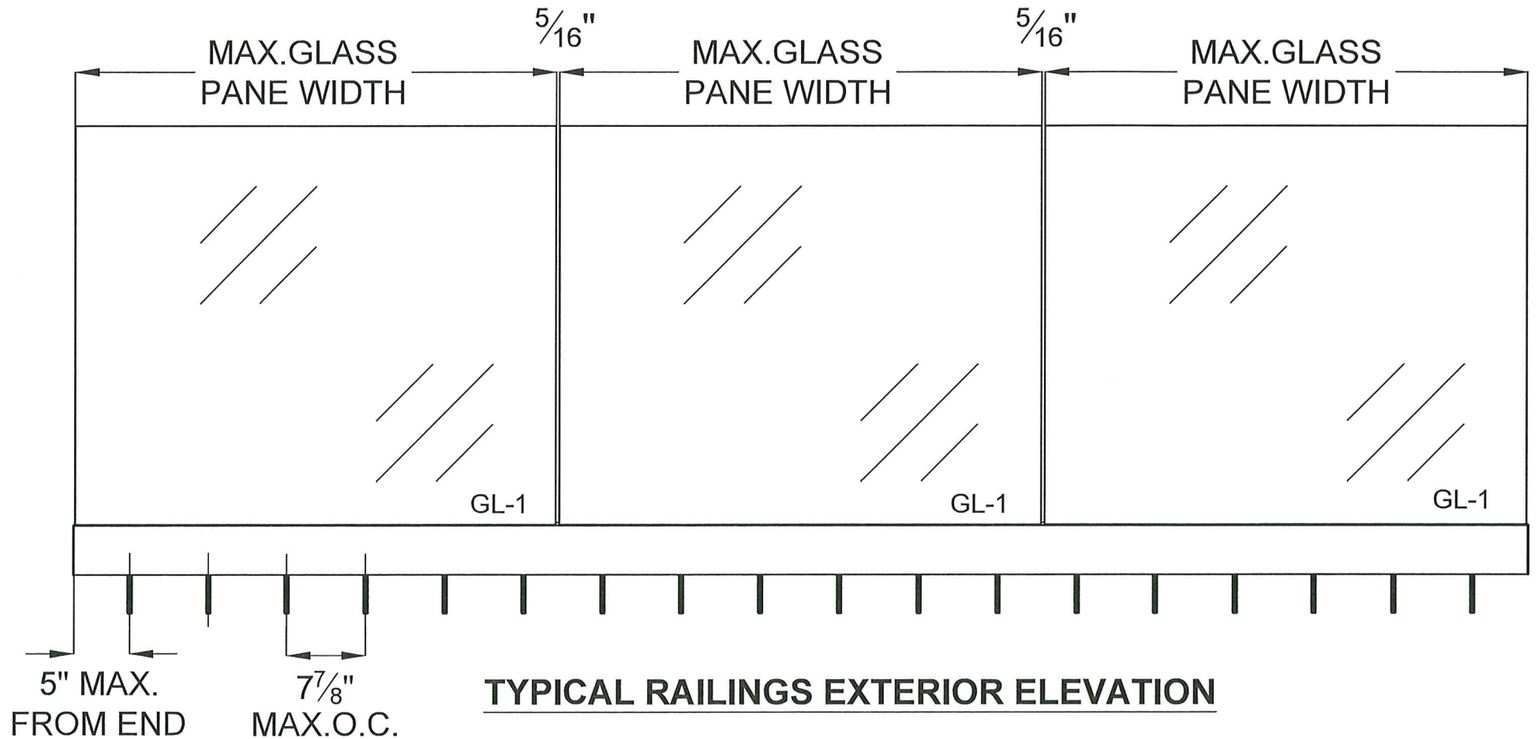

TYPICAL RAILINGS EXTERIOR ELEVATION

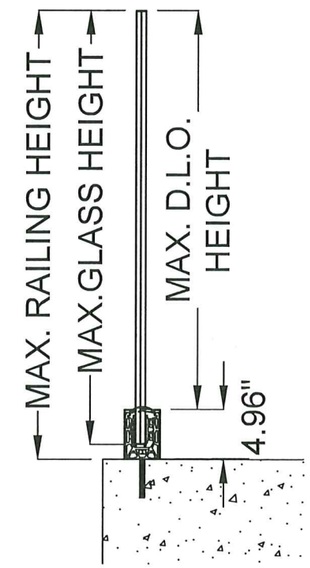

TYPICAL RAILINGS SECTION

TYPICAL RAILINGS TOP VIEW

MIAMI-DADE COUNTY

PRODUCT REVISED
as complying with the Florida Building Code
Acceptance No. 24-0719.07
Expiration Date 09/09/2026
By
Miami Dade Product Control

HERMES F. NORERO, P.E.
FLORIDA PE NO. 73778

HERMES F. NORERO
LICENSE
No. 73778
STATE OF FLORIDA
PROFESSIONAL ENGINEER

H&G

Channel Manufacturer
E-mail: wayne@hardwareandglass.com
Phone: +8613727117405
Address: City Garden, 55 Lianjiang Road, Qingyuan City, Guangdong,China

HARDWARE AND GLASS GROUP LLC
E-mail: wayne@hardwareandglass.com
Phone:3236475800
Address: 8 The Green Suite # 7407 Dover,DE 19901

Drawing Spec.	A4	WEIGHT(KG)		Drawn by	Michael	Drawn NO.
Projection		Date	2020/02/13	Auditing by		BR86-T3680-2
Page	2 OF 5	RE Date		Approved by		

GL-1:13/16" LAMINATED GLASS

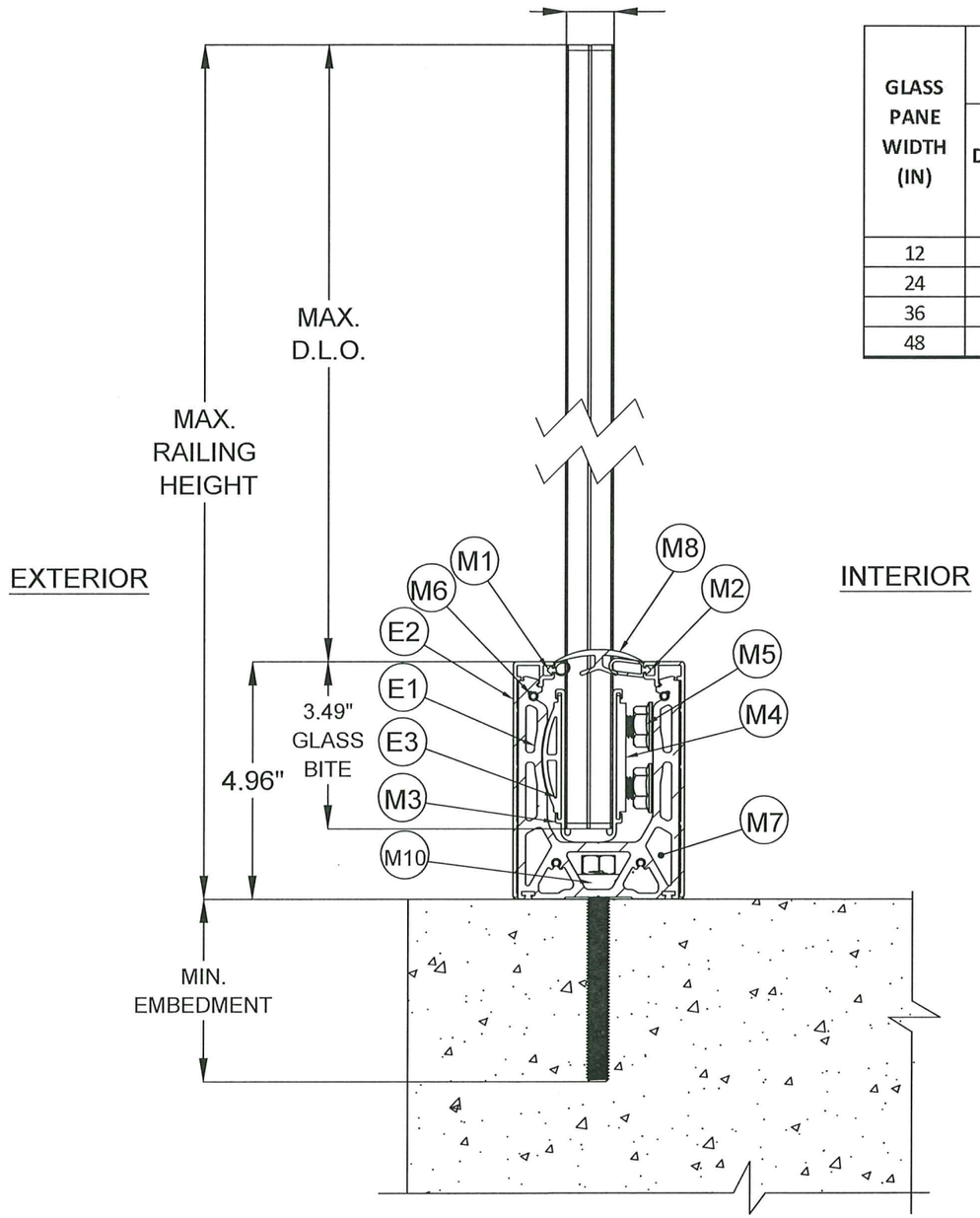

GLASS PANE WIDTH (IN)	EFFECTIVE GLASS THICKNESS		ALLOWABLE DESIGN PRESSURE (PSF)				200 LB LIVE LOAD		50 LB/FT LIVE LOAD	
	DEFLECTION (IN)	STRESS (IN)	MAX. D.L.O. HEIGHT (IN)				MAX. UNSSUPORTED GLASS HEIGHT (IN)		MAX. UNSSUPORTED GLASS HEIGHT (IN)	
			36	39.04	42	48	STRESS	DEFLECTION	STRESS	DEFLECTION
12	0.5384	0.6023	50.0	50.0	43.2	33.1	21.8	53.4	87.1	46.0
24	0.6399	0.6901	50.0	50.0	43.2	33.1	57.1	76.6	114.3	54.7
36	0.6938	0.7272	50.0	50.0	43.2	33.1	95.2	92.3	126.9	59.3
48	0.7216	0.744	50.0	50.0	-	-	132.8	103.1	132.8	61.7

ANCHOR SPECIFICATIONS:

1. 1/2" LDT ITW RED HEAD
   4-1/2" MIN. EMBEDMENT
   4" MIN. EDGE DISTANCE
   7-7/8" MAX. SPACING
   3000 PSI MIN. CONCRETE F'c

1. 1/2" SCREW-BOLT+, DEWALT
   4-1/4" MIN. EMBEDMENT
   4" MAX. EDGE DISTANCE
   7-7/8" MAX. SPACING
   3000 PSI MIN. CONCRETE F'c

MIAMI-DADE COUNTY

PRODUCT REVISED
as complying with the Florida
Building Code
Acceptance No. 24-0319.07
Expiration Date 09/09/2026
By
Miami Dade Product Control

HERMES F. NORERO, P.E.
FLORIDA PE NO. 73778

HERMES F. NORERO
LICENSE
No. 73778
STATE OF
FLORIDA
PROFESSIONAL ENGINEER

Channel Manufacturer
E-mail: wayne@hardwareandglass.com
Phone: +8613727117405
Address: City Garden, 55 Lianjiang Road, Qingyuan City, Guangdong,China

HARDWARE AND GLASS GROUP LLC
E-mail: wayne@hardwareandglass.com
Phone:3236475800
Address: 8 The Green Suite # 7407 Dover,DE 19901

Drawing Spec.	A4	WEIGHT(KG)		Drawn by	Michael	Drawn NO.
Projection		Date	2020/02/13	Auditing by		BR86-T3680-3
Page	3 OF 5	RE Date		Approved by		

BILL OF MATERIALS

CODE	PART	DESCRIPTION	MATERIAL
E1	BR86C	CHANNEL	ALUMINIUM 6063-T6
E2	BR86CP	FULL COVER	ALUMINIUM 6063-T5/6463-T5
E3	BR86SRP	CURVE PLATE	ALUMINIUM 6063-T5
M1	BR68-R4	RUBBER	EPDM (UVSTABLE)
M2	BR68-R17	RUBBER	EPDM (UVSTABLE)
M3	BR68-RU21.6	U GASKET	TPV (UVSTABLE)
M4	BR86-PP	STAINLESS STEEL PLATE	STAINLESS STEEL 2205
M5	Flange nuts	RECOMMENDED 30 LB-FT TORQUE	STAINLESS STEEL 316
M6	BR68 CONNECT PIN	ALIGNING PIN	STAINLESS STEEL 316
M7	BR86ECB	END CAP	ALUMINIUM 6063-T5/6463-T5
M8	BR86GC	GLASS DIVIDER	EPDM (UVSTABLE)
M10	BR86SW	WASHER	ALUMINIUM 6063-T6

E1

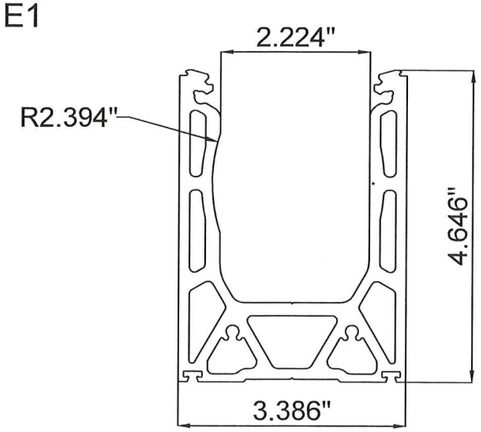

E2

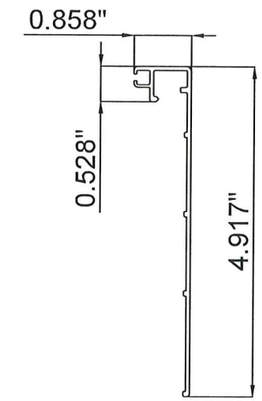

E3

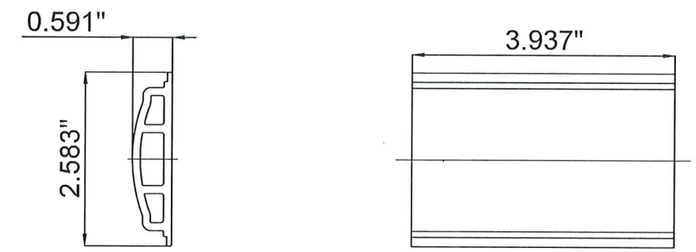

M10

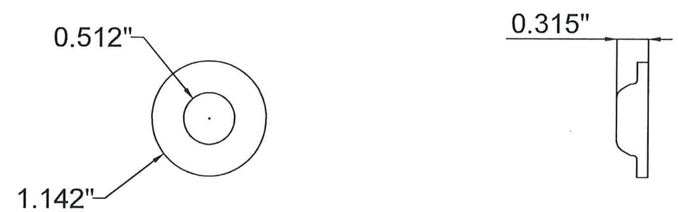

MIAMI-DADE COUNTY

PRODUCT REVISED
as complying with the Florida
Building Code
Acceptance No 24-0919.07
Expiration Date 09/09/2026
By
Miami Dade Product Control

HERMES F. NORERO, P.E.
FLORIDA PE NO. 73778

HERMES F. NORERO
LICENSE
No. 73778
STATE OF
FLORIDA
PROFESSIONAL ENGINEER

Channel Manufacturer
E-mail: wayne@hardwareandglass.com
Phone: +8613727117405
Address: City Garden, 55 Lianjiang Road, Qingyuan City, Guangdong,China

HARDWARE AND GLASS GROUP LLC
E-mail: wayne@hardwareandglass.com
Phone:3236475800
Address: 8 The Green Suite # 7407 Dover,DE 19901

Drawing Spec.	A4	WEIGHT(KG)		Drawn by	Michael	Drawn NO.
Projection		Date	2020/02/13	Auditing by		BR86-T3680-4
Page	4 OF 5	RE Date		Approved by		

M1

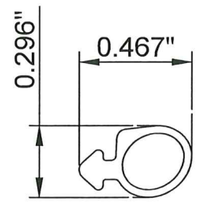

M2

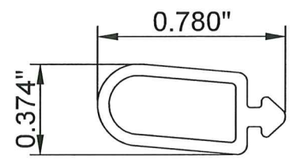

M3

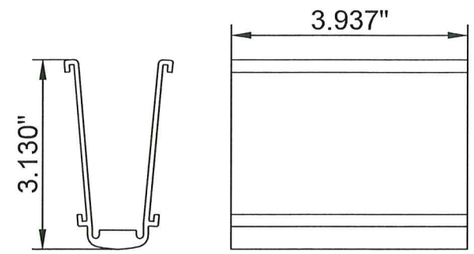

M4

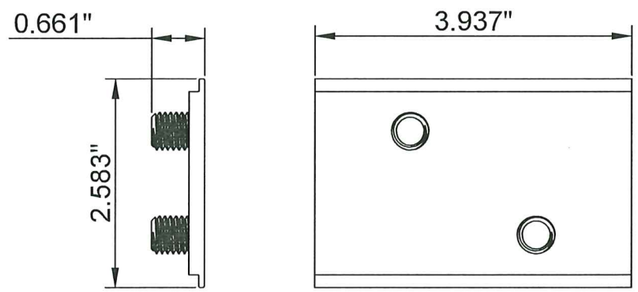

M5

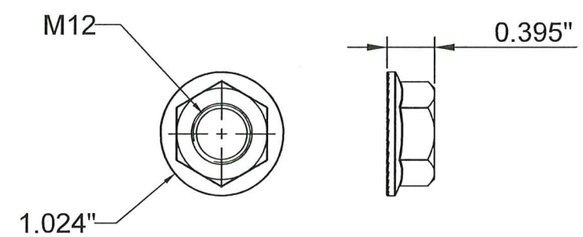

M6

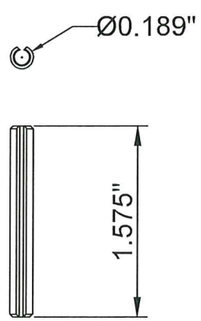

M7

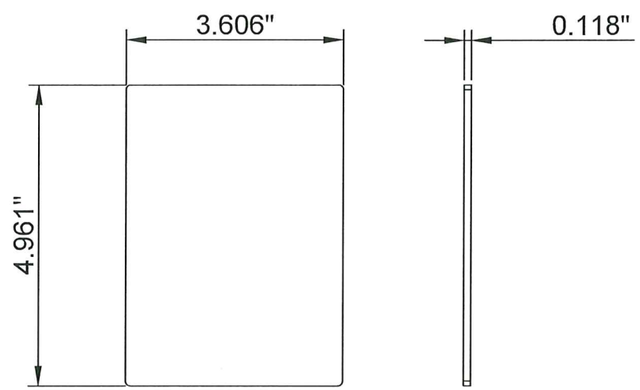

M8

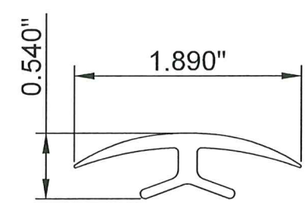

MIAMI-DADE COUNTY

PRODUCT REVISED
as complying with the Florida
Building Code
Acceptance No 26-0918.07
Expiration Date 09/09/2026
By
Miami Dade Product Control

HERMES F. NORERO, P.E.
FLORIDA REG. NO. 73778

HERMES F. NORERO
LICENSE
No. 73778
STATE OF
FLORIDA
PROFESSIONAL ENGINEER

Channel Manufacturer
E-mail: wayne@hardwareandglass.com
Phone: +8613727117405
Address: City Garden, 55 Lianjiang Road, Qingyuan City, Guangdong,China

HARDWARE AND GLASS GROUP LLC
E-mail: wayne@hardwareandglass.com
Phone:3236475800
Address: 8 The Green Suite # 7407 Dover,DE 19901

Drawing Spec.	A4	WEIGHT(KG)		Drawn by	Michael	Drawn NO.
Projection		Date	2020/02/13	Auditing by		BR86-T3680-5
Page	5 OF 5	RE Date		Approved by		

BR78 RAILING SYSTEM WITH LAMINATED GLASS

GENERAL NOTES:

1. THE PRODUCT SHOWN HEREIN IS DESIGNED AND MANUFACTURED TO COMPLY WITH THE 8TH (2023) EDITION FLORIDA BUILDING CODE (FBC), INCLUDING HVHZ.
2. PRODUCT IS RATED FOR SMALL AND LARGE MISSILE IMPACT.
3. ANCHORS SHALL BE CORROSION RESISTANT, SPACED AS SHOWN ON THE DETAILS AND INSTALLED PER MANUFACTURER'S SPECIFICATIONS. SPECIFIED EMBEDMENT TO BASE MATERIALS SHALL BE BEYOND FLOOR DRESSING.
4. THE INSTALLATION DETAILS DESCRIBED HEREIN ARE GENERIC AND MAY NOT REFLECT ACTUAL CONDITIONS FOR A SPECIFIC SITE. IF SITE CONDITIONS CAUSE INSTALLATION TO DEVIATE FROM THE REQUIREMENTS DETAILED HEREIN, A LICENSED ENGINEER OR ARCHITECT SHALL PREPARE SITE SPECIFIC DOCUMENTS FOR USE WITH THIS DOCUMENT IN NON-HVHZ AREAS. IN HVHZ AREAS, ONE TIME PRODUCT APPROVAL TO BE OBTAINED FROM MIAMI DADE RER OR AHJ.
5. ADEQUACY OF THE EXISTING STRUCTURAL CONCRETE SUBSTRATE AS A MAIN WIND FORCE RESISTING SYSTEM CAPABLE OF WITHSTANDING AND TRANSFERRING APPLIED PRODUCT LOADS TO THE FOUNDATION IS THE RESPONSIBILITY OF THE ENGINEER OR ARCHITECT OF RECORD FOR THE PROJECT OF INSTALLATION.
6. THE DESIGN LOADS SHOWN IN THIS DOCUMENT ARE ALLOWABLE DESIGN LOADS.
7. GLASS MEETS THE REQUIREMENTS OF ASTM E1300

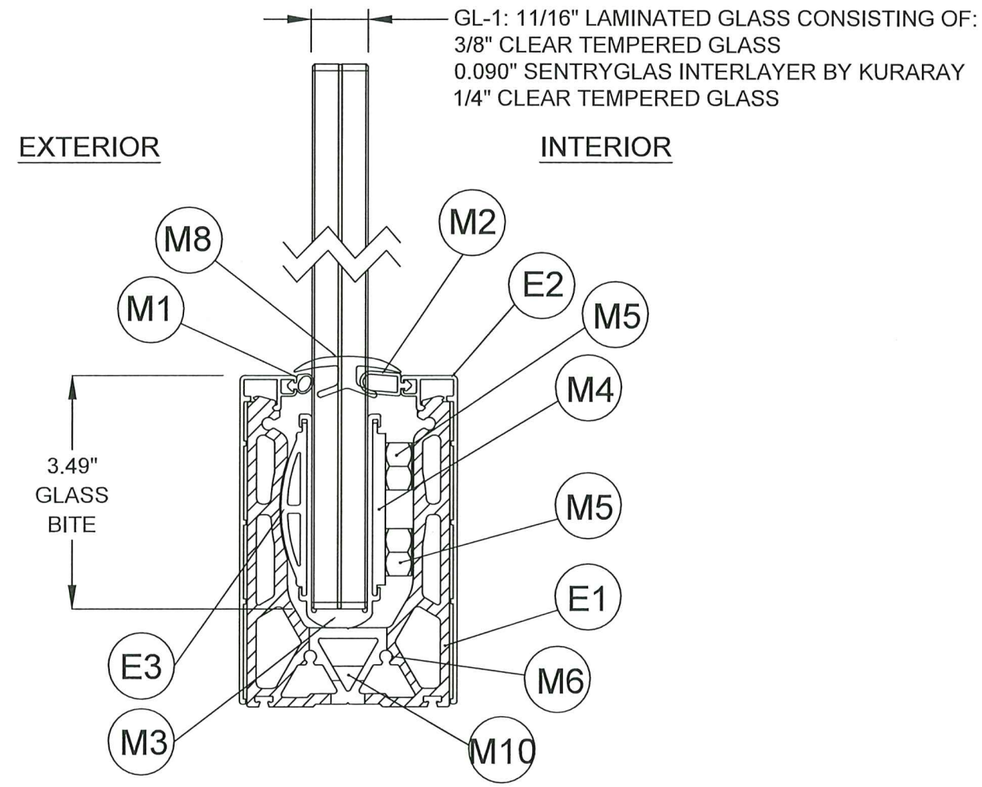

G1-L GLAZING DETAIL

INSTRUCTIONS FOR USE:

1. DETERMINE DESIGN WIND LOAD REQUIREMENTS BASED ON WIND VELOCITY, BUILDING HEIGHT, WIND ZONE, USING APPLICABLE ASCE 7 STANDARD.
2. SEE CHARTS ON SHEETS 3 FOR DESIGN LOAD CAPACITY OF DESIRED GLASS SIZE AND THE MAXIMUM RAILING HEIGHT BASED ON THE CONCENTRATED AND DISTRIBUTED LIVE LOADS.
3. SEE ANCHOR SPECIFICATIONS ON SHEET 3.

MIAMI-DADE COUNTY

PRODUCT REVISED
as complying with the Florida
Building Code
Acceptance No 24-0319.07
Expiration Date 09/09/2026
By
Miami Dade Product Control

HERMES F. NORERO, P.E.
FLORIDA PE NO. 73778

HERMES F. NORERO
LICENSE
No. 73778
STATE OF
FLORIDA
PROFESSIONAL ENGINEER

H&G

Channel Manufacturer
E-mail: wayne@hardwareandglass.com
Phone: +8613727117405
Address: City Garden, 55 Lianjiang Road, Qingyuan City, Guangdong,China

HARDWARE AND GLASS GROUP LLC
E-mail: wayne@hardwareandglass.com
Phone:3236475800
Address: 8 The Green Suite # 7407 Dover,DE 19901

Drawing Spec.	A4	WEIGHT(KG)		Drawn by	Michael	Drawn NO.
Projection		Date	2022/05/06	Auditing by		BR78-T3680-1
Page	1 OF 4	RE Date		Approved by		

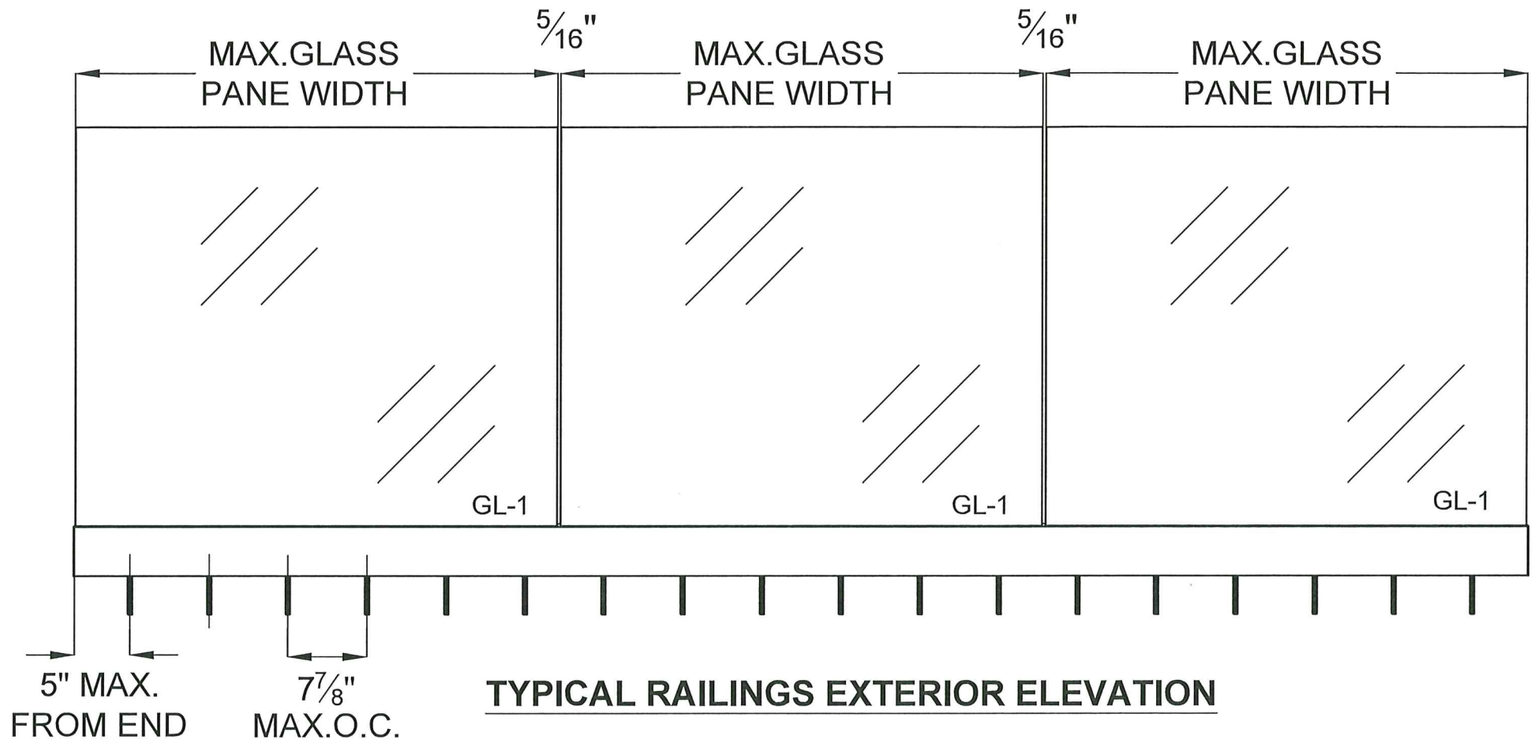

TYPICAL RAILINGS EXTERIOR ELEVATION

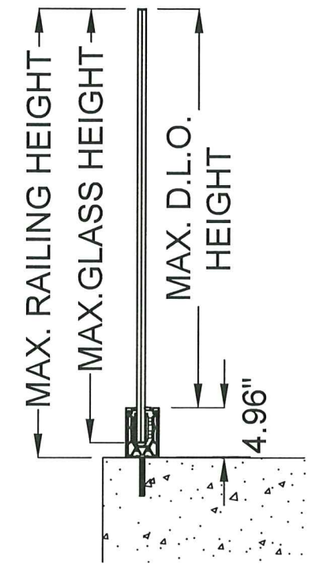

TYPICAL RAILINGS SECTION

TYPICAL RAILINGS TOP VIEW

MIAMI-DADE COUNTY

PRODUCT REVISED
as complying with the Florida Building Code
Acceptance No 24-0719.07
Expiration Date 09/09/2026
By
Miami Dade Product Control

HERMES F. NORERO, P.E.
FLORIDA PE NO. 73778

HERMES F. NORERO
LICENSE
No. 73778
STATE OF FLORIDA
PROFESSIONAL ENGINEER

Channel Manufacturer
E-mail: wayne@hardwareandglass.com
Phone: +8613727117405
Address: City Garden, 55 Lianjiang Road, Qingyuan City, Guangdong,China

HARDWARE AND GLASS GROUP LLC
E-mail: wayne@hardwareandglass.com
Phone:3236475800
Address: 8 The Green Suite # 7407 Dover,DE 19901

Drawing Spec.	A4	WEIGHT(KG)		Drawn by	Michael	Drawn NO.
Projection		Date	2022/05/06	Auditing by		BR78-T3680-2
Page	2 OF 4	RE Date		Approved by		

GL-1:11/16" LAMINATED GLASS

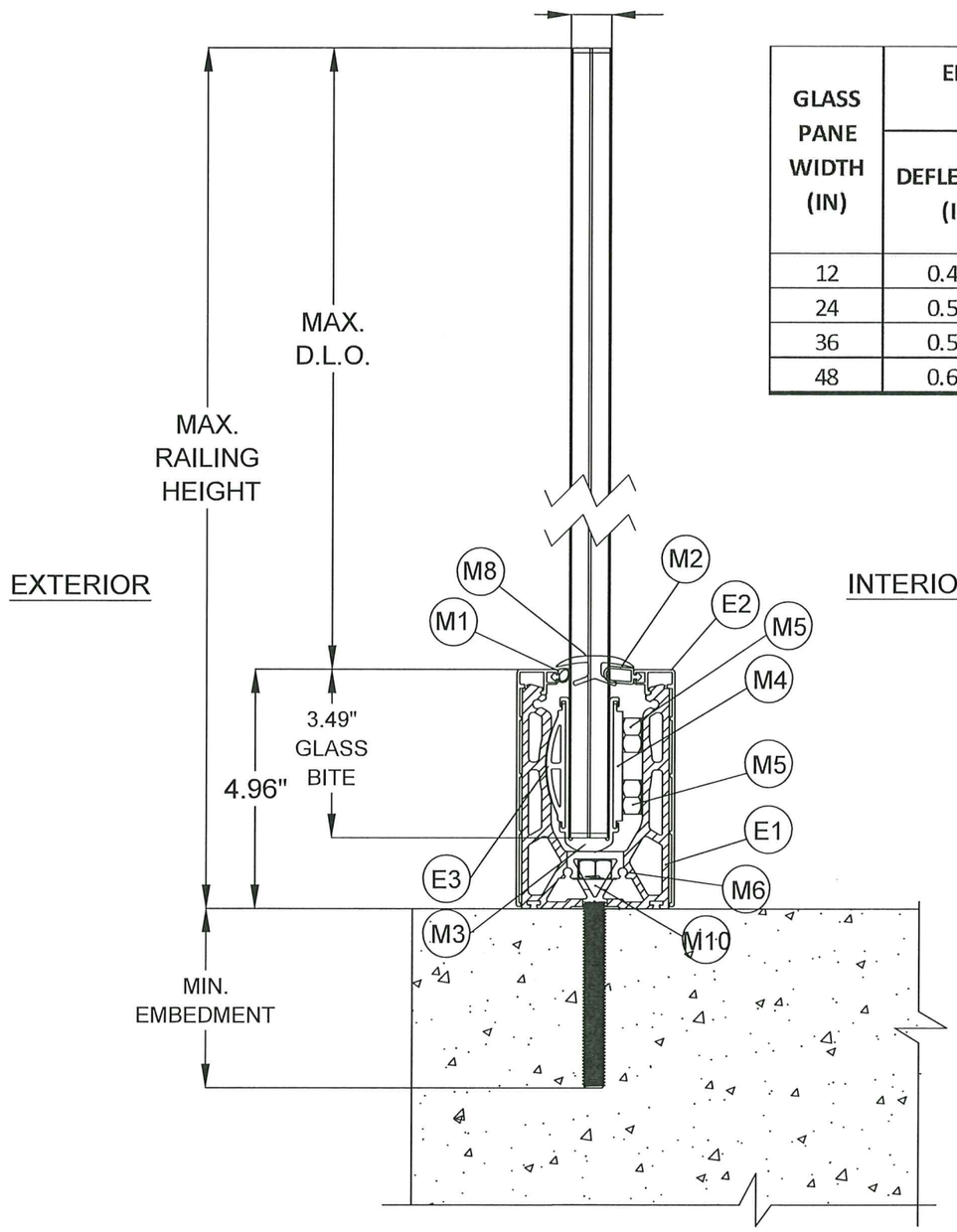

GLASS PANE WIDTH (IN)	EFFECTIVE GLASS THICKNESS		ALLOWABLE DESIGN PRESSURE (PSF)				200 LB LIVE LOAD		50 LB/FT LIVE LOAD	
	DEFLECTION (IN)	STRESS (IN)	MAX. D.L.O. HEIGHT (IN)				MAX. UNSSUPORTED GLASS HEIGHT (IN)		MAX. UNSSUPORTED GLASS HEIGHT (IN)	
			36	39.04	42	48	STRESS	DEFLECTION	STRESS	DEFLECTION
12	0.4461	0.5035	50.0	50.0	44.9	34.4	15.2	43.0	60.8	38.1
24	0.5393	0.5891	50.0	50.0	44.9	34.4	41.6	62.9	83.3	46.1
36	0.5924	0.6274	50.0	50.0	44.9	34.4	70.8	76.8	94.5	50.6
48	0.6211	0.6452	50.0	50.0	-	-	99.9	86.6	99.9	53.1

ANCHOR SPECIFICATIONS:

1. 1/2" LDT ITW RED HEAD
   4-1/2" MIN. EMBEDMENT
   4" MIN. EDGE DISTANCE
   7-7/8" MAX. SPACING
   3000 PSI MIN. CONCRETE F'c

1. 1/2" SCREW-BOLT+, DEWALT
   4-1/4" MIN. EMBEDMENT
   4" MAX. EDGE DISTANCE
   7-7/8" MAX. SPACING
   3000 PSI MIN. CONCRETE F'c

MIAMI-DADE COUNTY

PRODUCT REVISED
as complying with the Florida
Building Code
Acceptance No 24-0319.07
Expiration Date 09/09/2026
By
Miami Dade Product Control

HERMES F. NORERO, P.E.
FLORIDA PE NO. 73778

HERMES F. NORERO
LICENSE
No. 73778
STATE OF
FLORIDA
PROFESSIONAL ENGINEER

Channel Manufacturer
E-mail: wayne@hardwareandglass.com
Phone: +8613727117405
Address: City Garden, 55 Lianjiang Road, Qingyuan City, Guangdong,China

HARDWARE AND GLASS GROUP LLC
E-mail: wayne@hardwareandglass.com
Phone:3236475800
Address: 8 The Green Suite # 7407 Dover,DE 19901

Drawing Spec.	A4	WEIGHT(KG)		Drawn by	Michael	Drawn NO.
Projection		Date	2022/05/06	Auditing by		BR78-T3680-3
Page	3 OF 4	RE Date		Approved by		

BILL OF MATERIALS

CODE	PART	DESCRIPTION	MATERIAL
E1	BR-68BD	CHANNEL	ALUMINIUM 6063-T6
E2	BR68-SCP	FULL COVER	ALUMINIUM 6063-T5/6463-T5
E3	BR78SRP	CURVE PLATE	ALUMINIUM 6063-T5
M1	BR68-R2	RUBBER	EPDM (UVSTABLE)
M2	BR68-R17	RUBBER	EPDM (UVSTABLE)
M3	BR68-RU21.6	U GASKET	TPV (UVSTABLE)
M4	BR68-PP	STAINLESS STEEL PLATE	STAINLESS STEEL 2205
M5	Flange nuts	RECOMMENDED 26 LB-FT TORQUE	STAINLESS STEEL 316
M6	BR68 CONNECT PIN	ALIGNING PIN	STAINLESS STEEL 316
M7	BR68-ECB	END CAP	ALUMINIUM 6063-T5/6463-T5
M8	BR68GCP	GLASS DIVIDER	EPDM (UVSTABLE)
M10	BR68SW	WASHER	STAINLESS STEEL 316

E1

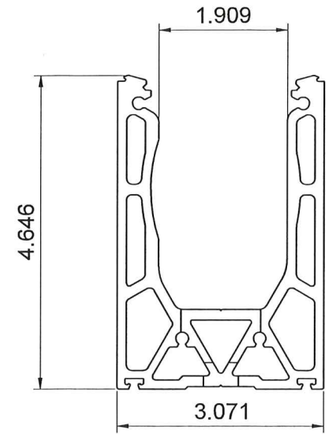

E2

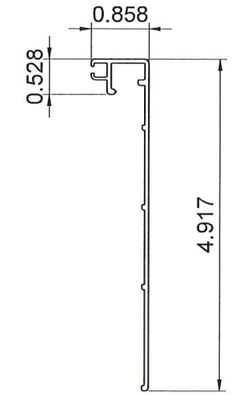

E3

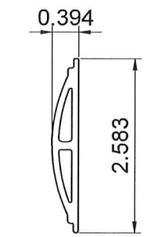

M1

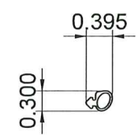

M2

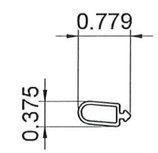

M3

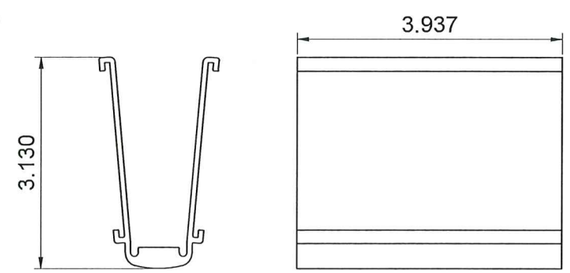

M4

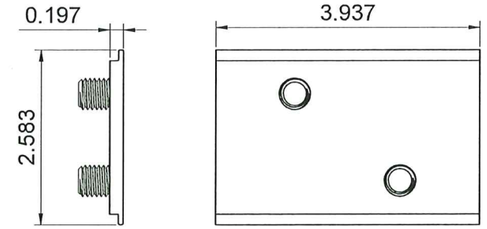

M5

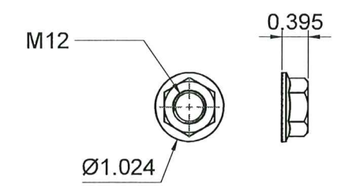

M10

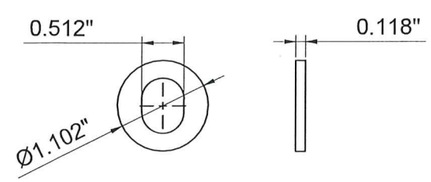

MIAMI-DADE COUNTY

PRODUCT REVISED
as complying with the Florida
Building Code
Acceptance No 24-0319.07
Expiration Date 08/09/2026
By
Miami Dade Product Control

HERMES F. NORERO, P.E.
FLORIDA REG. NO. 73778

HERMES F. NORERO
LICENSE
No. 73778
STATE OF
FLORIDA
PROFESSIONAL ENGINEER

H&G

Channel Manufacturer
E-mail: wayne@hardwareandglass.com
Phone: +8613727117405
Address: City Garden, 55 Lianjiang Road, Qingyuan City, Guangdong,China

HARDWARE AND GLASS GROUP LLC
E-mail: wayne@hardwareandglass.com
Phone:3236475800
Address: 8 The Green Suite # 7407 Dover,DE 19901

Drawing Spec.	A4	WEIGHT(KG)		Drawn by	Michael	Drawn NO.
Projection		Date	2022/05/06	Auditing by		BR78-T3680-4
Page	4 OF 4	RE Date		Approved by		

BR80 RAILING SYSTEM WITH LAMINATED GLASS

GENERAL NOTES:

1. THE PRODUCT SHOWN HEREIN IS DESIGNED AND MANUFACTURED TO COMPLY WITH THE 8TH (2023) EDITION FLORIDA BUILDING CODE (FBC), INCLUDING HVHZ.
2. PRODUCT IS RATED FOR SMALL AND LARGE MISSILE IMPACT.
3. ANCHORS SHALL BE CORROSION RESISTANT, SPACED AS SHOWN ON THE DETAILS AND INSTALLED PER MANUFACTURER'S SPECIFICATIONS. SPECIFIED EMBEDMENT TO BASE MATERIALS SHALL BE BEYOND FLOOR DRESSING.
4. THE INSTALLATION DETAILS DESCRIBED HEREIN ARE GENERIC AND MAY NOT REFLECT ACTUAL CONDITIONS FOR A SPECIFIC SITE. IF SITE CONDITIONS CAUSE INSTALLATION TO DEVIATE FROM THE REQUIREMENTS DETAILED HEREIN, A LICENSED ENGINEER OR ARCHITECT SHALL PREPARE SITE SPECIFIC DOCUMENTS FOR USE WITH THIS DOCUMENT IN NON-HVHZ AREAS. IN HVHZ AREAS, ONE TIME PRODUCT APPROVAL TO BE OBTAINED FROM MIAMI DADE RER OR AHJ.
5. ADEQUACY OF THE EXISTING STRUCTURAL CONCRETE SUBSTRATE AS A MAIN WIND FORCE RESISTING SYSTEM CAPABLE OF WITHSTANDING AND TRANSFERRING APPLIED PRODUCT LOADS TO THE FOUNDATION IS THE RESPONSIBILITY OF THE ENGINEER OR ARCHITECT OF RECORD FOR THE PROJECT OF INSTALLATION.
6. THE DESIGN LOADS SHOWN IN THIS DOCUMENT ARE ALLOWABLE DESIGN LOADS.
7. GLASS MEETS THE REQUIREMENTS OF ASTM E1300

INSTRUCTIONS FOR USE:

1. DETERMINE DESIGN WIND LOAD REQUIREMENTS BASED ON WIND VELOCITY, BUILDING HEIGHT, WIND ZONE, USING APPLICABLE ASCE 7 STANDARD.
2. SEE CHARTS ON SHEETS 3 FOR DESIGN LOAD CAPACITY OF DESIRED GLASS SIZE AND THE MAXIMUM RAILING HEIGHT BASED ON THE CONCENTRATED AND DISTRIBUTED LIVE LOADS.
3. SEE ANCHOR SPECIFICATIONS ON SHEET 3.

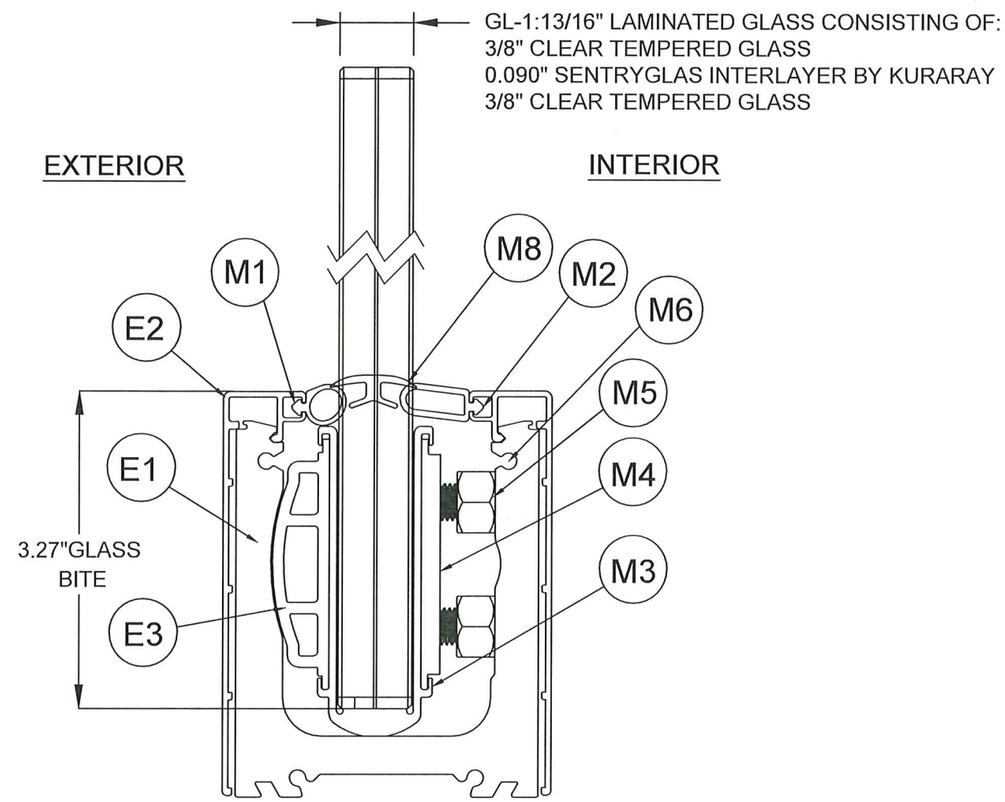

GL-1 GLAZING DETAIL

MIAMI-DADE COUNTY

PRODUCT REVISED
as complying with the Florida Building Code
Acceptance No 24-0318.07
Expiration Date 08/07/2026
By
Miami Dade Product Control

HERMES F. NORERO, P.E.
FLORIDA PE LIC. NO. 73778

HERMES F. NORERO
LICENSE
No. 73778
STATE OF FLORIDA
PROFESSIONAL ENGINEER

Channel Manufacturer
E-mail: wayne@hardwareandglass.com
Phone: +86 13727117405
Address: City Garden, 55 Lianjiang Road, Qingyuan City, Guangdong, China

H&G
HARDWARE AND GLASS GROUP LLC
E-mail: wayne@hardwareandglass.com
Phone: 3236475800
Address: 8 The Green Suite #7407 Dover, DE 19901

Drawing Spec.	A4	WEIGHT(KG)		Drawn by	Michael	Drawn NO.
Projection		Date	2022/05/06	Auditing by		BR80-T3680-1
Page	1 OF 4	RE Date		Approved by		

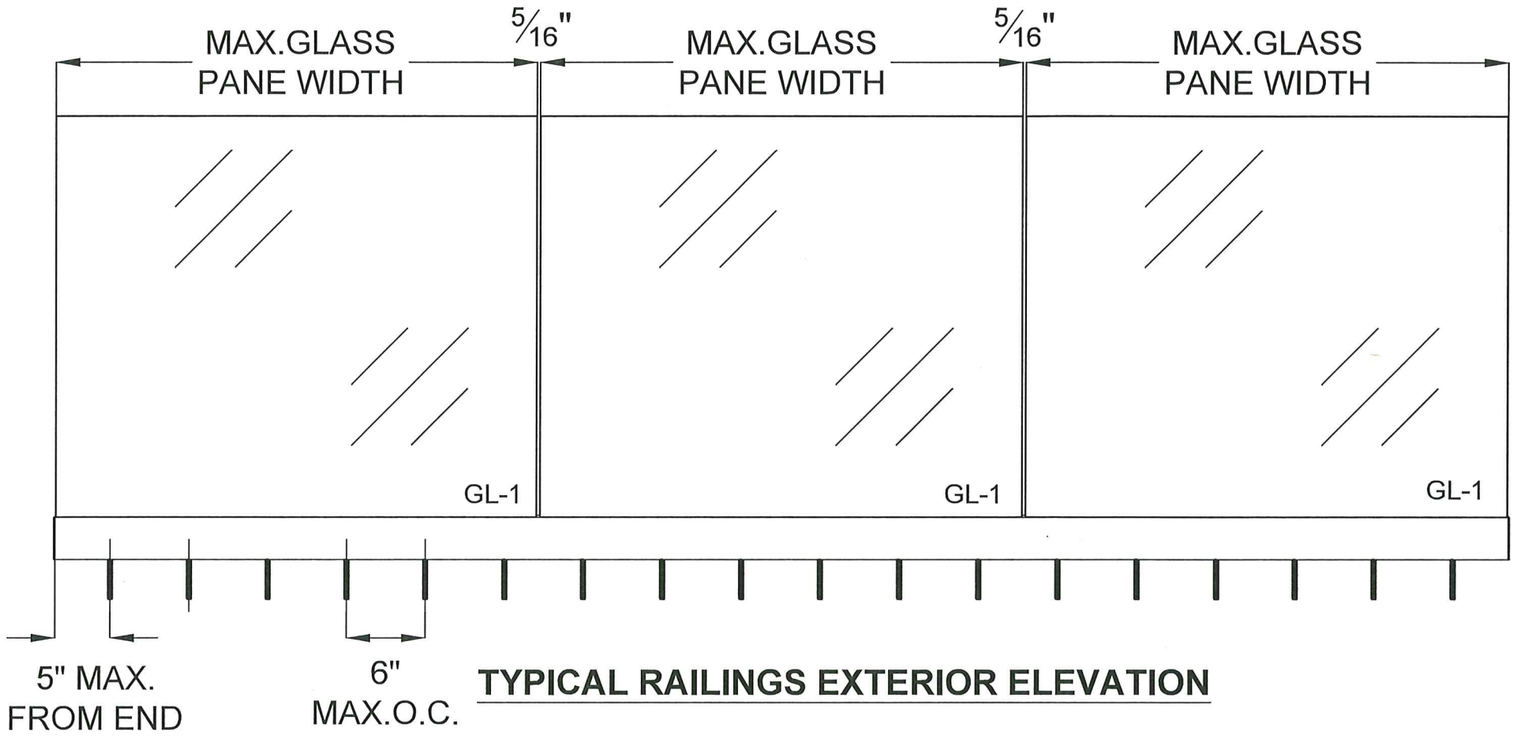

TYPICAL RAILINGS EXTERIOR ELEVATION

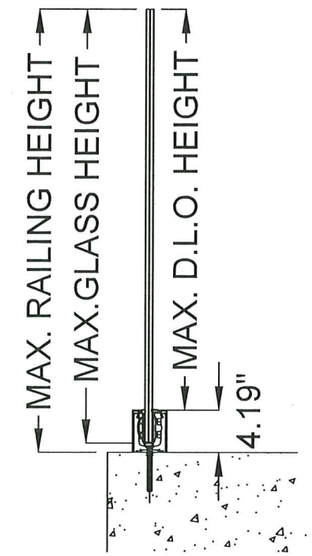

TYPICAL RAILINGS SECTION

TYPICAL RAILINGS TOP VIEW

MIAMI-DADE COUNTY

PRODUCT REVISED
as complying with the Florida Building Code
Acceptance No 24-0319.07
Expiration Date 09/09/2026
By
Miami Dade Product Control

HERMES F. NORERO, P.E.
FLORIDA PE LIC. NO. 73778

HERMES F. NORERO
LICENSE
No. 73778
STATE OF FLORIDA
PROFESSIONAL ENGINEER

H&G
HARDWARE AND GLASS GROUP LLC
E-mail: wayne@hardwareandglass.com
Phone: 3236475800
Address: 8 The Green Suite #7407 Dover, DE 19901

Drawing Spec.	A4	WEIGHT(KG)		Drawn by	Michael	Drawn NO.
Projection		Date	2022/05/06	Auditing by		BR80-T3680-2
Page	2 OF 4	RE Date		Approved by		

GL-1:13/16" LAMINATED GLASS

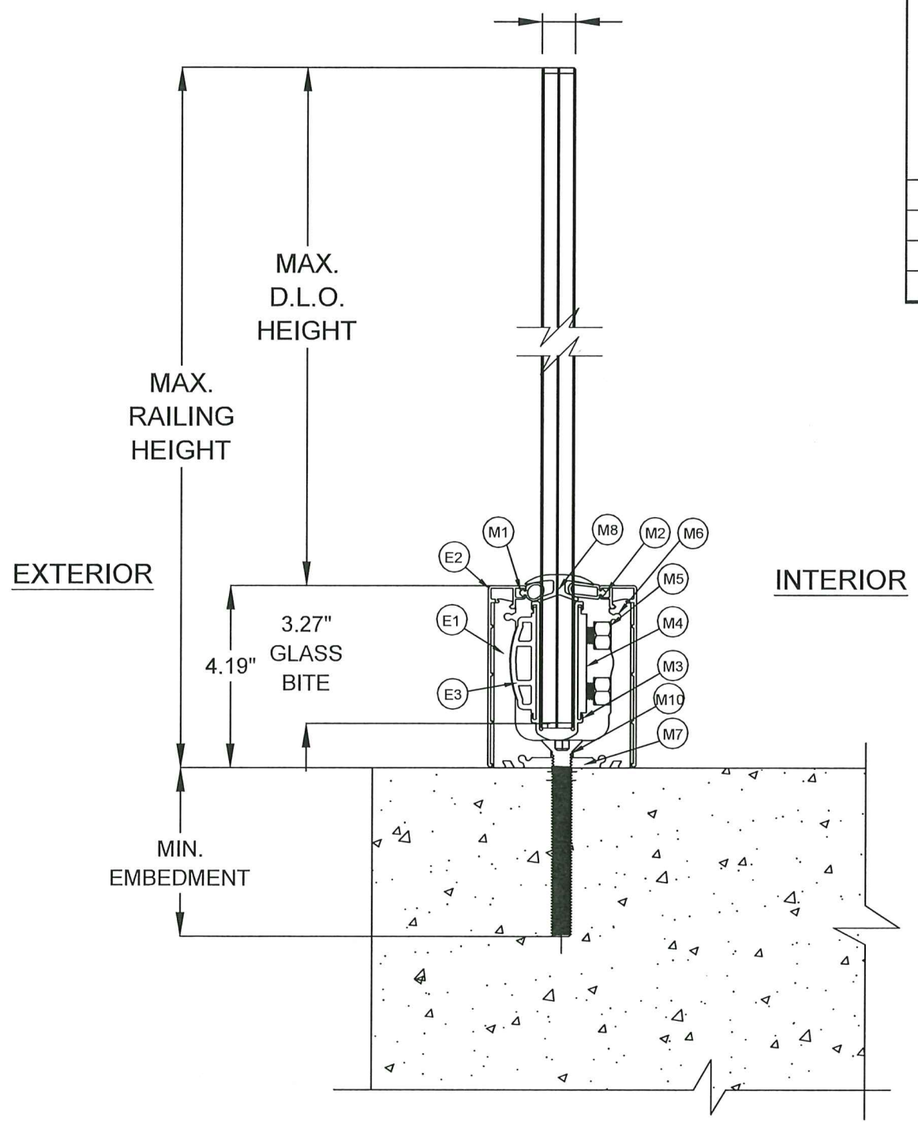

GLASS PANE WIDTH (IN)	EFFECTIVE GLASS THICKNESS		ALLOWABLE DESIGN PRESSURE (PSF)				200 LB LIVE LOAD		50 LB/FT LIVE LOAD	
	DEFLECTION (IN)	STRESS (IN)	MAX. D.L.O. HEIGHT (IN)				MAX. UNSSUPORTED GLASS HEIGHT (IN)		MAX. UNSSUPORTED GLASS HEIGHT (IN)	
			36	39.81	42	48	STRESS	DEFLECTION	STRESS	DEFLECTION
12	0.5384	0.6023	50.0	50.0	44.9	34.4	21.8	53.4	87.1	46.0
24	0.6399	0.6901	50.0	50.0	44.9	34.4	57.1	76.6	114.3	54.7
36	0.6938	0.7272	50.0	50.0	44.9	34.4	95.2	92.3	126.9	59.3
48	0.7216	0.744	50.0	50.0	-	-	132.8	103.1	132.8	61.7

ANCHOR SPECIFICATIONS:

1. 1/2" TITEN HD FLAT WASHER HEAD, SIMPSON
   4" MIN. EMBEDMENT
   4" MAX. EDGE DISTANCE
   6" MAX. SPACING
   2500 PSI MIN. CONCRETE F'c

MIAMI-DADE COUNTY

PRODUCT REVISED
as complying with the Florida
Building Code
Acceptance No 24-0319.07
Expiration Date 09/09/2026
By
Miami Dade Product Control

HERMES F. NORERO, P.E.
FLORIDA PE LICENSE NO. 73778

HERMES F. NORERO
LICENSE
No. 73778
STATE OF
FLORIDA
PROFESSIONAL ENGINEER

H&G
HARDWARE AND GLASS GROUP LLC
E-mail: wayne@hardwareandglass.com
Phone: 3236475800
Address: 8 The Green Suite #7407 Dover, DE 19901

Drawing Spec.	A4	WEIGHT(KG)		Drawn by	Michael	Drawn NO.
Projection		Date	2022/05/06	Auditing by		BR80-T3680-3
Page	3 OF 4	RE Date		Approved by		

BILL OF MATERIALS

CODE	PART	DESCRIPTION	MATERIAL
E1	BR78C	CHANNEL	ALUMINIUM 6063-T6
E2	BR65CP	COVER PLATE	ALUMINIUM 6063-T5/6463-T5
E3	BR68-SRP	CURVE PLATE	ALUMINIUM 6063-T5
M1	BR68-R1	RUBBER	EPDM (UVSTABLE)
M2	BR68-R25	RUBBER	EPDM (UVSTABLE)
M3	BR68-U21	U GASKET	TPV (UVSTABLE)
M4	BR68-PP	STAINLESS STEEL PLATE	STAINLESS STEEL 2205
M5	Flange nuts	RECOMMENDED 30 LB-FT TORQUE	STAINLESS STEEL 316
M6	BR68 CONNECT PIN	ALIGNING PIN	STAINLESS STEEL 316
M7	BR68-ECB	END CAP	ALUMINIUM 6063-T5/6463-T5
M8	BR68GCP	GLASS DIVIDER	EPDM (UVSTABLE)
M10	BR68SW	WASHER	STAINLESS STEEL 316

E1

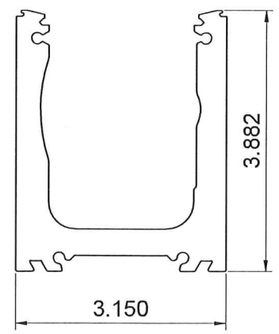

E2

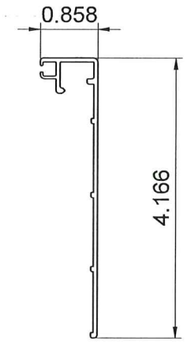

E3

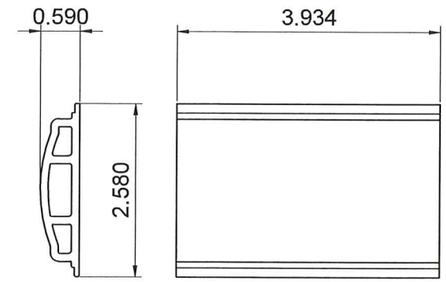

M1

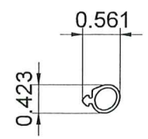

M2

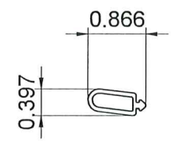

M3

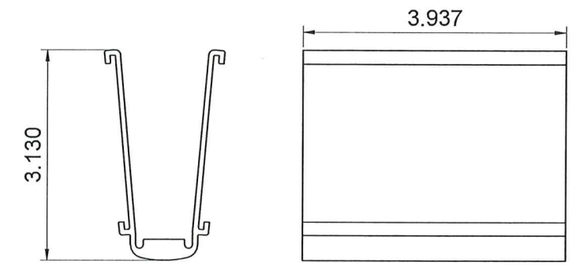

M4

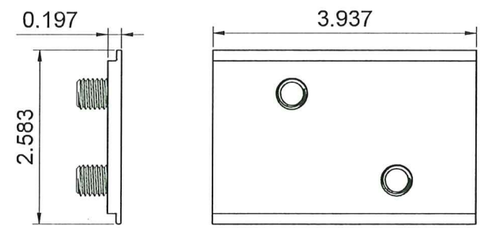

M5

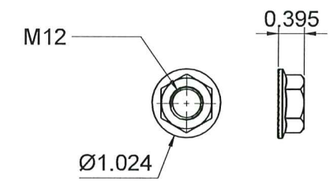

MIAMI-DADE COUNTY

PRODUCT REVISED
as complying with the Florida
Building Code
Acceptance No 24-0319.07
Expiration Date 09/09/2026
By
Miami Dade Product Control

HERMES E. NORERO, P.E.
FLORIDA PE LIC. NO. 73778

HERMES E. NORERO
LICENSE
No. 73778
STATE OF
FLORIDA
PROFESSIONAL ENGINEER

H&G
HARDWARE AND GLASS GROUP LLC
E-mail: wayne@hardwareandglass.com
Phone: 3236475800
Address: 8 The Green Suite #7407 Dover, DE 19901

Drawing Spec.	A4	WEIGHT(KG)		Drawn by	Michael	Drawn NO.
Projection		Date	2022/05/06	Auditing by		BR80-T3680-4
Page	4 OF 4	RE Date		Approved by		