MIAMI-DADE COUNTY
PRODUCT CONTROL SECTION
11805 SW 26 Street, Room 208
Miami, Florida 33175-2474
T (786) 315-2590 F (786) 315-2599
www.miamidade.gov/economy

DEPARTMENT OF REGULATORY AND ECONOMIC RESOURCES (RER)
BOARD AND CODE ADMINISTRATION DIVISION

NOTICE OF ACCEPTANCE (NOA)

Babcock-Davis
9300 73rd Avenue North
Brooklyn Park, MN 55428

SCOPE:

This NOA is being issued under the applicable rules and regulations governing the use of construction materials. The documentation submitted has been reviewed and accepted by Miami-Dade County RER-Product Control Section to be used in Miami-Dade County and other areas where allowed by the Authority Having Jurisdiction (AHJ).

This NOA shall not be valid after the expiration date stated below. The Miami-Dade County Product Control Section (In Miami-Dade County) and/or the AHJ (in areas other than Miami-Dade County) reserve the right to have this product or material tested for quality assurance purposes. If this product or material fails to perform in the accepted manner, the manufacturer will incur the expense of such testing and the AHJ may immediately revoke, modify, or suspend the use of such product or material within their jurisdiction. RER reserves the right to revoke this acceptance if it is determined by Miami-Dade County Product Control Section that this product or material fails to meet the requirements of the applicable building code.

This product is approved as described herein and has been designed to comply with the Florida Building Code, including the High Velocity Hurricane Zone.

DESCRIPTION: Hurricane Zone and Personnel Series BG, BA and BW Steel and Aluminum Roof Hatch

APPROVAL DOCUMENT: Drawing titled "Roof Hatch, Hurricane Zone and Personnel Series Single Door, Single Wall Curb, Single-Point and Two-Point Latch", sheets 1 through 16 of 16, dated 03/17/2017, with revision D dated 01/13/2023, prepared by Babcock-Davis, signed and sealed by Wayne K. Helmila, P.E. on 04/25/2024, bearing the Miami-Dade County Product Control revision stamp with the Notice of Acceptance number and expiration date by the Miami-Dade County Product Control Section.

MISSILE IMPACT RATING: Large and Small Missile Impact Resistant

LABELING: Each unit shall bear a permanent label with the manufacturer's name or logo, city, state and following statement: "Miami-Dade County Product Control Approved", unless otherwise noted herein.

RENEWAL of this NOA shall be considered after a renewal application has been filed and there has been no change in the applicable building code negatively affecting the performance of this product.

TERMINATION of this NOA will occur after the expiration date or if there has been a revision or change in the materials, use, and/or manufacture of the product or process. Misuse of this NOA as an endorsement of any product, for sales, advertising or any other purposes shall automatically terminate this NOA. Failure to comply with any section of this NOA shall be cause for termination and removal of NOA.

ADVERTISEMENT: The NOA number preceded by the words Miami-Dade County, Florida, and followed by the expiration date may be displayed in advertising literature. If any portion of the NOA is displayed, then it shall be done in its entirety.

INSPECTION: A copy of this entire NOA shall be provided to the user by the manufacturer or its distributors and shall be available for inspection at the job site at the request of the Building Official.

This NOA **revises NOA # 21-1201.02** and consists of this page 1 and evidence pages E-1, E-2, E-3, E-4, E-5 and E-6, as well as approval document mentioned above.

The submitted documentation was reviewed by **Carlos M. Utrera, P.E.**

MIAMI-DADE COUNTY APPROVED

12/17/24

NOA No. 24-0904.09
Expiration Date: May 25, 2027
Approval Date: December 26, 2024

NOTICE OF ACCEPTANCE: EVIDENCE SUBMITTED

1. EVIDENCE SUBMITTED UNDER PREVIOUS NOA's

A. DRAWINGS ***"Submitted under NOA #17-0703.03"***

1. Drawing No. **Door Hatch Assembly**, titled "Roof Hatch, Hurricane Zone Series Single Door, Single Wall Curb, Single Point and Two Point Latch", sheets 1 through 16 of 16, 06/22/2017, prepared by Babcock-Davis, signed and sealed by Wayne K. Helmila, P.E.

B. TESTS ***"Submitted under NOA #17-0207.12"***

1. Test report on 1) Air Infiltration Test, per FBC, TAS 202-94
2) Uniform Static Air Pressure Test, Loading per FBC TAS 202-94
3) Water Resistance Test, per FBC, TAS 202-94
4) Large Missile Impact Test per FBC, TAS 201-94,
5) Cyclic Wind Pressure Test per FBC, TAS 203-94,
along with marked-up drawings and installation diagram of Model RHHA48X48S1T Aluminum Roof Hatch/Single Door, prepared by Element Materials Technology, Test Report No. **ESP023828P-A4848N.2A Rev2**, dated 10/18/2016, signed and sealed by Jason R. Steen, P.E.

2. Test report on 1) Air Infiltration Test, per FBC, TAS 202-94
2) Uniform Static Air Pressure Test, Loading per FBC TAS 202-94
3) Water Resistance Test, per FBC, TAS 202-94
4) Large Missile Impact Test per FBC, TAS 201-94,
5) Cyclic Wind Pressure Test per FBC, TAS 203-94,
along with marked-up drawings and installation diagram of Model RHHG48X48S1T Galvaneal A653 Roof Hatch/Single Door, prepared by Element Materials Technology, Test Report No. **ESP023828P-G4848N.3A Rev2**, dated 10/18/2016, signed and sealed by Jason R. Steen, P.E.

3. Test report on 1) Air Infiltration Test, per FBC, TAS 202-94
2) Uniform Static Air Pressure Test, Loading per FBC TAS 202-94
3) Water Resistance Test, per FBC, TAS 202-94
4) Large Missile Impact Test per FBC, TAS 201-94,
5) Cyclic Wind Pressure Test per FBC, TAS 203-94,
along with marked-up drawings and installation diagram of Model RHHG30X96S1T Galvaneal A653 Roof Hatch/Single Door, prepared by Element Materials Technology, Test Report No. **ESP023828P-G3096N.1A Rev2**, dated 10/18/2016, signed and sealed by Jason R. Steen, P.E.

Carlos M. Utrera, P.E.
Product Control Examiner
NOA No. 24-0904.09
Expiration Date: May 25, 2027
Approval Date: December 26, 2024

NOTICE OF ACCEPTANCE: EVIDENCE SUBMITTED

B. TESTS *"Submitted under NOA #17-0207.12"* (Continued)

4. Test report on 1) Air Infiltration Test, per FBC, TAS 202-94
2) Uniform Static Air Pressure Test, Loading per FBC TAS 202-94
3) Water Resistance Test, per FBC, TAS 202-94
4) Large Missile Impact Test per FBC, TAS 201-94,
5) Cyclic Wind Pressure Test per FBC, TAS 203-94,
along with marked-up drawings and installation diagram of Model RHHA30X96S1T Aluminum Roof Hatch/Single Door, prepared by Element Materials Technology, Test Report No. **ESP023828P-A3096N.4A Rev2**, dated 10/18/2016, signed and sealed by Jason R. Steen, P.E.

C. CALCULATIONS *"Submitted under NOA #17-0207.12"*

1. Anchoring calculations prepared by Rice Engineering, dated 12/29/2016, signed and sealed by Wayne K. Helmila, P.E.

D. QUALITY ASSURANCE

1. Miami-Dade Department of Regulatory and Economic Resources (RER).

E. MATERIAL CERTIFICATIONS *"Submitted under NOA #17-0703.03"*

1. Notice of Acceptance issued to Firestone Building Products Company, LLC for their Firestone Polyisocyanurate Foam Insulation, approved on 05/09/2013 and expiring on 06/05/2018.

2. UL Certification #BRYX.R13184 issued to Diversifoam Products Inc. for their EPS foam plastic insulation.

F. STATEMENTS *"Submitted under NOA #17-0207.12"*

1. Statement letter of code conformance to 5th edition (2014) FBC issued by Rice Engineering, dated 01/18/2017, signed and sealed by Wayne K. Helmila, P.E.

2. Statement letter of no financial interest issued by Rice Engineering, dated 01/18/2017, signed and sealed by Wayne K. Helmila, P.E.

Carlos M. Utrera, P.E.
Product Control Examiner
NOA No. 24-0904.09
Expiration Date: May 25, 2027
Approval Date: December 26, 2024

NOTICE OF ACCEPTANCE: EVIDENCE SUBMITTED

2. EVIDENCE SUBMITTED UNDER NOA # 18-0110.04

A. DRAWINGS

1. None.

B. TESTS

1. None.

C. CALCULATIONS

1. None.

D. QUALITY ASSURANCE

1. Miami-Dade Department of Regulatory and Economic Resources (RER).

E. MATERIAL CERTIFICATIONS

1. None.

F. STATEMENTS

1. Statement letter of code conformance to **FBC 6th Edition (2017)**, dated December 19, 2017, issued by Rice Engineering, signed and sealed by Wayne K. Helmila, P.E.

Carlos M. Utrera, P.E.
Product Control Examiner
NOA No. 24-0904.09
Expiration Date: May 25, 2027
Approval Date: December 26, 2024

NOTICE OF ACCEPTANCE: EVIDENCE SUBMITTED

3. NEW EVIDENCE SUBMITTED

A. DRAWINGS

1. Drawing titled "Roof Hatch, Hurricane Zone and Personnel Series Single Door, Single Wall Curb, Single-Point and Two-Point Latch", sheets 1 through 16 of 16, dated 03/17/2017, prepared by Babcock-Davis, signed and sealed by Wayne K. Helmila, P.E. on 11/16/2021.

B. TESTS *"Submitted under NOA # 21-1201.01"*

1. Test report on 1) Air Infiltration Test, per FBC, TAS 202-94
2) Uniform Static Air Pressure Test, Loading per FBC TAS 202-94
3) Water Resistance Test, per FBC, TAS 202-94
4) Large Missile Impact Test per FBC, TAS 201-94 (Level E, 80 ft/sec),
5) Cyclic Wind Pressure Test per FBC, TAS 203-94,
along with marked-up drawings and installation diagram of Model RHHA48X48S1T Aluminum Roof Hatch/Single Door, prepared by Element Materials Technology, Test Report No. **ESP023828P-A4848N.2A Rev3**, dated 10/18/2016, revised on 10/12/2021, signed and sealed by Jason R. Steen, P.E.

2. Test report on 1) Air Infiltration Test, per FBC, TAS 202-94
2) Uniform Static Air Pressure Test, Loading per FBC TAS 202-94
3) Water Resistance Test, per FBC, TAS 202-94
4) Large Missile Impact Test per FBC, TAS 201-94 (Level E, 80 ft/sec),
5) Cyclic Wind Pressure Test per FBC, TAS 203-94,
along with marked-up drawings and installation diagram of Model A3096 Aluminum Roof Hatch/Single Door, prepared by Intertek, Test Report No. **M5878.01-201-18 R0**, dated 08/09/2021, signed and sealed by Vinu J. Abraham, P.E.

3. Test report on 1) Air Infiltration Test, per FBC, TAS 202-94
2) Uniform Static Air Pressure Test, Loading per FBC TAS 202-94
3) Water Resistance Test, per FBC, TAS 202-94
4) Large Missile Impact Test per FBC, TAS 201-94 (Level E, 80 ft/sec),
5) Cyclic Wind Pressure Test per FBC, TAS 203-94,
along with marked-up drawings and installation diagram of Model G3096 Galvannealed Roof Hatch/Single Door, prepared by Intertek, Test Report No. **M5880.01-201-18 R0**, dated 08/09/2021, signed and sealed by Vinu J. Abraham, P.E.

Carlos M. Utrera, P.E.
Product Control Examiner
NOA No. 24-0904.09
Expiration Date: May 25, 2027
Approval Date: December 26, 2024

NOTICE OF ACCEPTANCE: EVIDENCE SUBMITTED

B. TESTS (Continued)

4. Test report on 1) Air Infiltration Test, per FBC, TAS 202-94
2) Uniform Static Air Pressure Test, Loading per FBC TAS 202-94
3) Water Resistance Test, per FBC, TAS 202-94
4) Large Missile Impact Test per FBC, TAS 201-94 (Level E, 80 ft/sec),
5) Cyclic Wind Pressure Test per FBC, TAS 203-94,
along with marked-up drawings and installation diagram of Model RHHA30X96S1T Aluminum Roof Hatch/Single Door, prepared by Element Materials Technology, Test Report No. **ESP023828P-A3096N.4A Rev3**, dated 10/18/2016, revised on 10/12/2021, signed and sealed by Jason R. Steen, P.E.

C. CALCULATIONS *"Submitted under NOA # 21-1201.01"*

1. Anchoring calculations prepared by Rice Engineering, dated 11/05/2021, signed and sealed by Wayne K. Helmila, P.E.

D. QUALITY ASSURANCE

1. Miami-Dade Department of Regulatory and Economic Resources (RER).

E. MATERIAL CERTIFICATIONS

1. None.

F. STATEMENTS

1. Statement letter of code conformance to 7th edition (2020) of the FBC, issued by Rice Engineering, dated 11/15/2021, signed and sealed by Wayne K. Helmila, P.E.

2. Statement letter of no financial interest, issued by Rice Engineering, dated 11/15/2021, signed and sealed by Wayne K. Helmila, P.E.

Carlos M. Utrera, P.E.
Product Control Examiner
NOA No. 24-0904.09
Expiration Date: May 25, 2027
Approval Date: December 26, 2024

NOTICE OF ACCEPTANCE: EVIDENCE SUBMITTED

4. NEW EVIDENCE SUBMITTED

A. DRAWINGS

1. Drawing titled "Roof Hatch, Hurricane Zone and Personnel Series Single Door, Single Wall Curb, Single-Point and Two-Point Latch", sheets 1 through 16 of 16, dated 03/17/2017, with revision D dated 01/13/2023, prepared by Babcock-Davis, signed and sealed by Wayne K. Helmila, P.E. on 04/25/2024.

B. TESTS

1. None.

C. CALCULATIONS

1. None.

D. QUALITY ASSURANCE

1. Miami-Dade Department of Regulatory and Economic Resources (RER)

E. MATERIAL CERTIFICATIONS

1. None.

F. STATEMENTS

1. Statement letter of code conformance to 8th edition (2023) of the FBC, issued by Rice Engineering, dated 11/13/2024, signed and sealed by Wayne K. Helmila, P.E.

Carlos M. Utrera, P.E.
Product Control Examiner
NOA No. 24-0904.09
Expiration Date: May 25, 2027
Approval Date: December 26, 2024

REVISIONS			
REV	DESCRIPTION	DATE	APPROVED
A	INITIAL RELEASE	10/10/16	IMT
B	ADDED HINGE DETAIL PG. 1; ADDED DETAIL VIEW TITLES PG. 1; UPDATED MAT'L , PG. 6,7,8; NOTE 7 PG. 1 TO READ 'ALUMINUM DESIGN MANUAL' ACRONYMNS PG. 2; ADDED MODEL# NOTE PG.2	3/17/17	IMT
C	CORRECTED TYPOS, REMOVED NOTCHES FROM LATCH STIFFENER	11/9/21	AMB
D	ADDED STANDARD AND CUSTOM MODEL NUMBERS BW3630, BW3636, BW3054, BW4848 BW W X* L (WHERE W = 18" - 48" AND L = 18" - 60")**	1/13/23	PNN

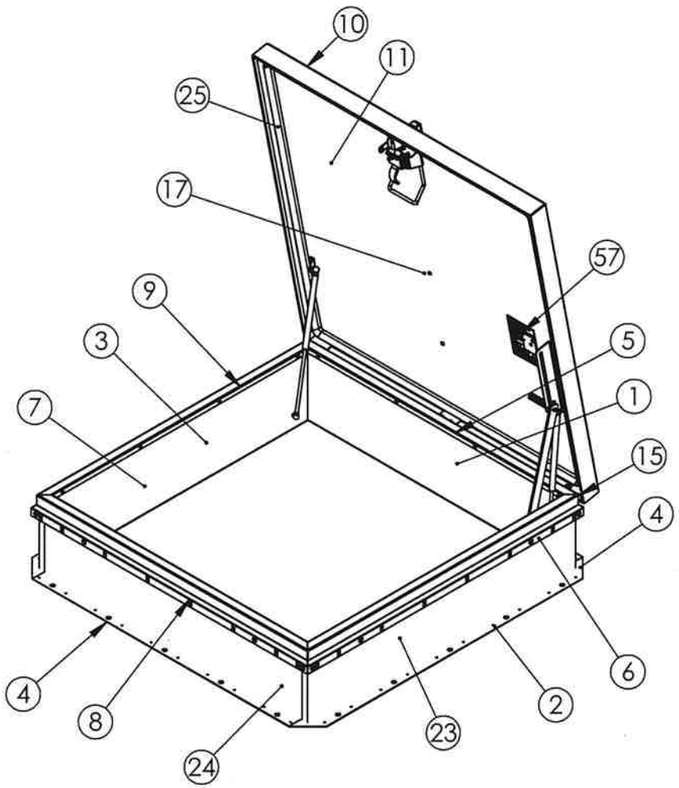

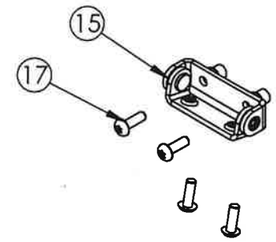

HINGE ASSEMBLY

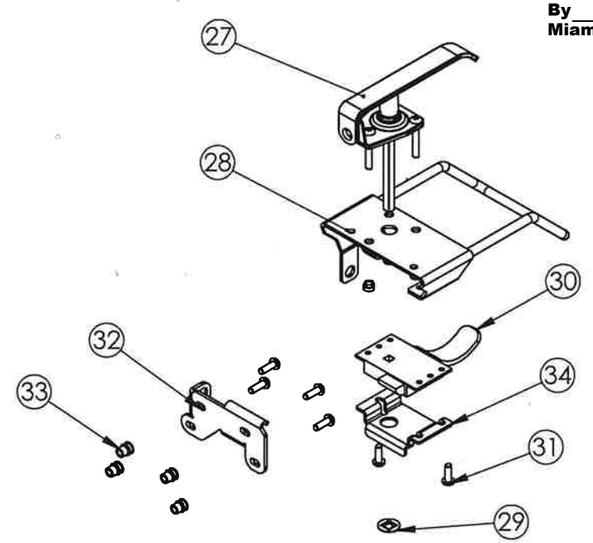

SINGLE POINT LATCH ASSEMBLY

PRODUCT REVISED
as complying with the Florida Building Code
NOA-No. 24-0904.09
Expiration Date 05/25/2027
By
Miami-Dade Product Control

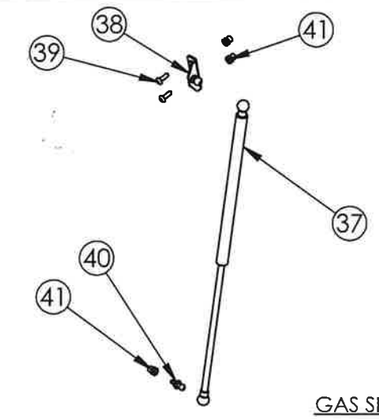

GAS SPRING ASSEMBLY

HOLD OPEN ARM ASSEMBLY

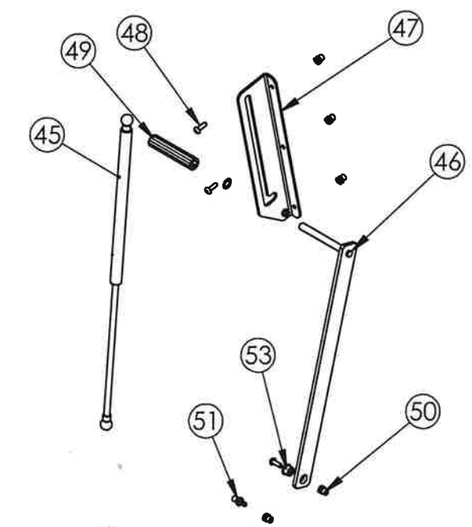

NOTES:

1) THE DESIGN CONTAINED HEREIN IS DESIGNED AND TESTED IN ACCORDANCE WITH THE FLORIDA BUILDING CODE: TEST PROTOCOL TAS-201, TAS 202, TAS-203
2) THE SHORT TERM LOAD FACTOR HAS NOT BEEN USED.
3) PRODUCT APPROVED UP TO A INSIDE AREA OF 16.00 SF (WIDTH X LENGTH ≤ 16.00 SF).
4) ATTACHMENT TO STRUCTURE SHALL MEET THE FOLLOWING ALLOWABLE LOAD CONDITIONS. THE VALUES PROVIDED ASSUME THE ATTACHMENT DIRECTLY TO THE STRUCTURAL ELEMENTS WITHOUT SPACE. ALLOWABLE MINIMUM LOAD VALUES PULLOUT: 1,120 LBS. SHEAR: 324 LBS.
5) USE THE FASTENER MANUFACTURES RECOMMENDED SAFETY FACTORS. IF DIFFERENT CONDITIONS EXIST, CONTACT NYSTROM OR A FLORIDA LICENSED ENGINEER FOR CONSULTATION.
6) ALL LABELS TO BE LOCATED IN APPROXIMATE LOCATIONS AS SHOWN.
7) PROTECTION BETWEEN ALUMINUM & DISSIMILAR MATERIALS MUST BE PROVIDED PER ALUMINUM DESIGN MANUAL
8) ALL FASTENERS EXPOSED TO EXTERIOR CONDITIONS (EXCEPT FOR 300 SERIES STAINLESS STEEL) MUST BE SEALED WITH PROSOCO LIQUID FLASHING

DESIGN PRESSURE RATING	IMPACT RATING	WATER FILTRATION
+/- 70 PSF	LARGE MISSILE IMPACT	100%DP WITH ZERO WATER FILTRATION

WAYNE K. HELMILA
LICENSE
No. 59092
STATE OF FLORIDA
PROFESSIONAL ENGINEER

APR 2 5 2024

RICE ENGINEERING
105 School Creek Trail
Luxemburg, WI 54217
Phone: (920) 617-1042
Fax: (920) 617-1100
www.rice-inc.com

Florida Firm No: F-01000005061
Certificate of Authorization: #9090
Wayne K. Helmila
Registration No: 59092

Building Code: FBC 2023 — Project No: R24-03-052

babcockdavis
9300 73rd Avenue North
Brooklyn Park, MN 55428

	NAME	DATE
DRAWN	DKL	10/10/2016
RELEASED	IMT	3/21/2017

TITLE: Roof Hatch, Hurricane Zone Series
Single Door, Single Wall Curb
Single Point Latch

SIZE	DWG. NO.	REV
B	DOOR HATCH ASSEMBLY	D

WEIGHT: Weight
SHEET 01 OF 16

ITEM	QTY.	PART NUMBER	DESCRIPTION
		CURB ASSEMBLY	
1	1	CurbHinge	CURB - HINGE SIDE
2	1	CurbBottom	CURB - BOTTOM SIDE
3	1	CurbTop	CURB - TOP SIDE
4	1	CurbLatch	CURB - LATCH SIDE
		CAP FLASH ASSEMBLY	
5	1	CflshHinge	CAP FLASH - HINGE SIDE
6	1	CflshBtm	CAP FLASH - BOTTOM SIDE
7	1	CflshTop	CAP FLASH - TOP SIDE
8	1	CflshLatch	CAP FLASH - LATCH SIDE
9	22	28544	BUTTON HD TORX SCREW, 1/4 x .75, 3 PT, (ZPS)
		COVER ASSEMBLY	
10	1	Cover	COVER
11	1	Liner	COVER LINER
12	2	Stiffener Side	STIFFENER - TOP/BOTTOM
13	1	Stiffer Latch	STIFFENER - LATCH SIDE
14	1	Stiffener Mid	STIFFENER - MIDDLE
15	3	28719	ASSY, HINGE, (ZPS)
17	20	28544	BUTTON HD TORX SCREW, 1/4 x .75, 3 PT, (ZPS)
18	9	4359	RIVNUT, 1/4-20, .027-.165 GRIP
19	1	29898	BRKT, SUPPORT, HINGE, (ZPS)
		INSULATION AND GASKET	
23	2	RHInsulationTopBottom	INSULATION, 1" POLY ISO R-6
24	2	RHInsulationLatchHinge	INSULATION, 1" POLY ISO R-6
25	1	RHGasketCover	GASKET, RH, (EPDM), 1.125" x 0.655" CLOSED CELL FOAM
		LATCH ASSEMBLY - SINGLE POINT	
27	1	29860	HDL, PADLOCKING, STL, (ZPS)
28	1	29870	HANDLE
29	1	29903	NUT, PUSH, TINNERMAN, 5/16 SQ, (BLK PHOS)
30	1	1297	LATCH, SLAM, (ZPS)
31	7	28544	BUTTON HD TORX SCREW, 1/4 x .75, 3 PT, (ZPS)
32	1	30336	BRKT, LATCH CATCH
33	4	4359	RIVNUT, 1/4-20, .027-.165 GRIP (ALUM)
34	1	30337	BRKT, LATCH, SUPPORT

ITEM	QTY	PART NUMBER	DESCRIPTION
		GAS SPRING ASSEMBLY	
37	1	29880	GAS SPRING, 56 LBF
37	1	29881	GAS SPRING, 112 LBF
38	1	29878	BRKT, BALL STUD, SPG, (ZPS)
39	2	28544	BUTTON HD TORX SCREW, 1/4 x .75, 3 PT, (ZPS)
40	1	29879	BALL STUD, 10MM, 1/4-20, (ZPS)
41	3	4359	RIVNUT, 1/4-20, .027-.165 GRIP (ALUM)
		LIFTING/HINGE SUPPORT ASSEMBLY	
45	1	29880	GAS SPRING, 56 LBF
45	1	29881	GAS SPRING, 112 LBF
46	1	29863	ARM, HOA, STL, (ZPS)
47	1	29890	BRKT, HOA/SPG, (ZPS)
48	4	28544	BUTTON HD TORX SCREW, 1/4 x .75, 3 PT, (ZPS)
49	1	2934	HDL, RED GRIP, (VINYL)
50	5	4359	RIVNUT, 1/4-20, .027-.165 GRIP (ALUM)
51	1	29879	BALL STUD, 10MM, 1/4-20, (ZPS)
53	1	29895	BEARING, HOA, (ZPS)
		LABELS & MISC.	
56	1	29905	LABEL, 4" x 6", MODEL NUMBER
57	1	29906	LABEL, HANDLE RELEASE
58	1	29907	LABEL, INSTALLATION, 5X7,
59	-	-	2" FIBERGLASS TAPE
60	-	28096	SILICONE

WAYNE K. HELMILA
LICENSE
No. 59092
STATE OF FLORIDA
PROFESSIONAL ENGINEER
APR 2 5 2024

STANDARD MODEL NUMBERS:

BG3630	BA3630	BW3630
BG3636	BA3636	BW3636
BG3054	BA3054	BW3054
BG4848	BA4848	BW4848

CUSTOM MODEL NUMBERS:
BA W X* L (WHERE W= 18" - 48" AND L = 18" - 60")**
BG W X* L (WHERE W= 18" - 48" AND L = 18" - 60")**
BW W X* L (WHERE W= 18" - 48" AND L = 18" - 60")**
*"X" OMITTED ON NON-FRACTIONAL WIDTH AND LENGTHS
**AREA NOT TO EXCEED 16 SQ. FT.

NOTE:
NUMBER OF ANCHORS RANGES BETWEEN 2 AND 4 PER SPACING DIMENSIONS ON SHEET 4.

▷ MATERIAL THICKNESS TO BE DIFFERENT ON STEEL AND ALUMINUM MODELS
△2 QTY VARIES PER HATCH SIZE
(3) REQUIRED ON ALUMINUM VERSONS
[4] NOT REQUIRED ON ALUMINUM VERSONS
[5] NOT SHOWN ON ASSEMBLY

PRODUCT REVISED
as complying with the Florida Building Code
NOA-No. 24-0904.09
Expiration Date 05/25/2027
By
Miami-Dade Product Control

RICE ENGINEERING
105 School Creek Trail
Luxemburg, WI 54217
Phone: (920) 617-1042
Fax: (920) 617-1100
www.rice-inc.com
Florida Firm No: F-01000005061
Certificate of Authorization: #9090
Wayne K. Helmila
Registration No: 59092

Building Code: FBC 2023 — Project No: R24-03-052

babcockdavis
9300 73rd Avenue North
Brooklyn Park, MN 55428

	NAME	DATE
DRAWN	DKL	10/10/2016
RELEASED	IMT	3/21/2017

TITLE: Roof Hatch, Hurricane Zone Series
Single Door, Single Wall Curb
Single Point Latch

SIZE	DWG. NO.	REV
B	DOOR HATCH ASSEMBLY	D

WEIGHT: Weight
SHEET 02 OF 16

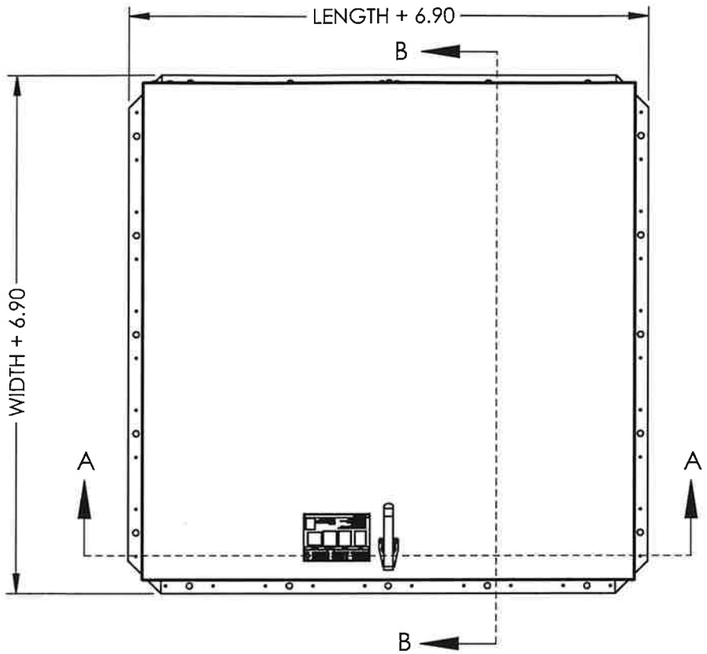

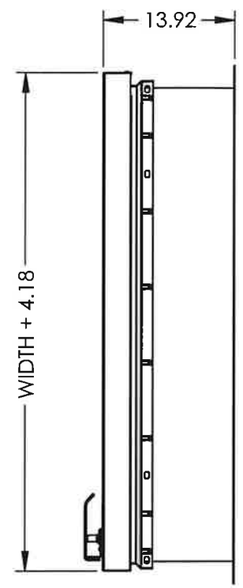

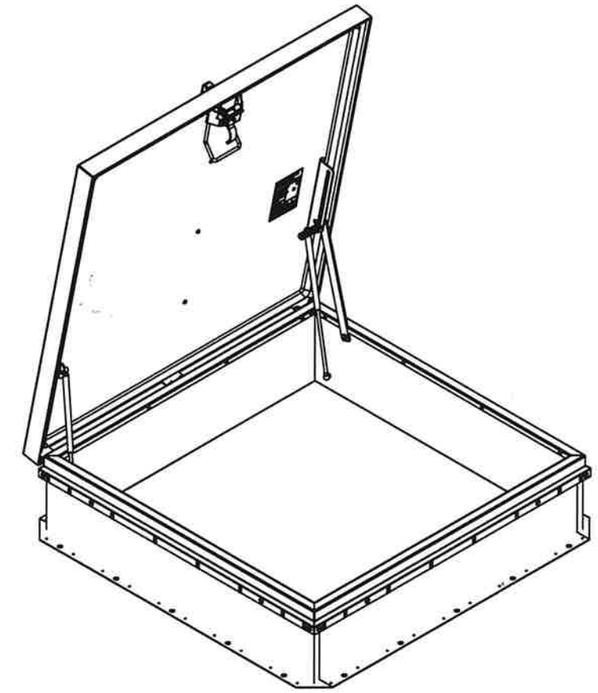

PRODUCT REVISED
as complying with the Florida Building Code
NOA-No. 24-0904.09
Expiration Date 05/25/2027
By
Miami-Dade Product Control

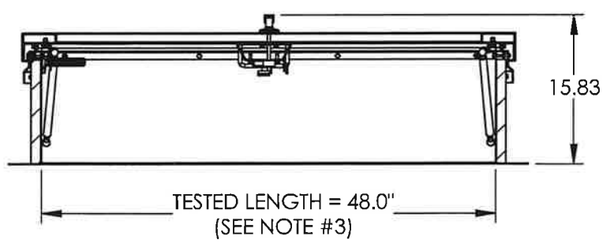

SECTION A-A

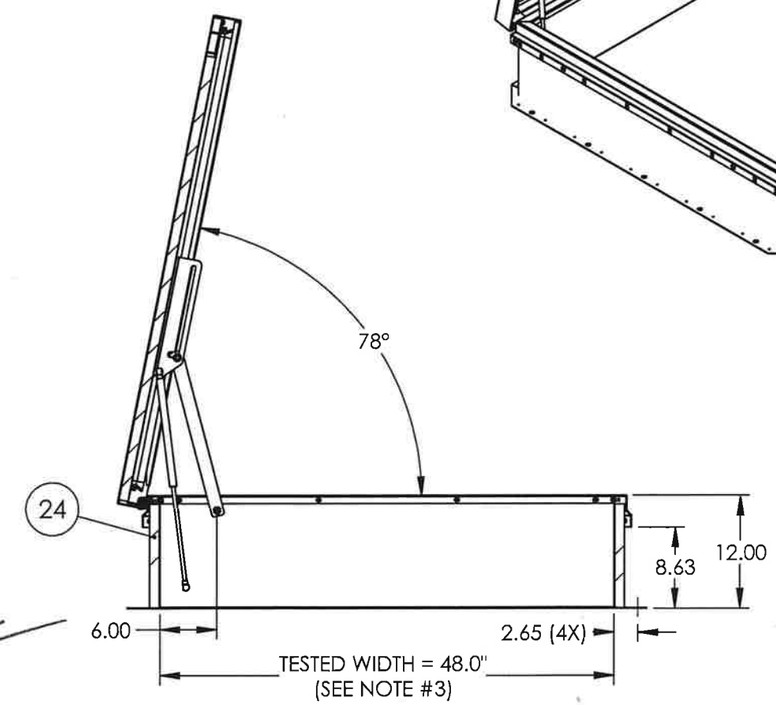

SECTION B-B

WAYNE K. HELMILA
LICENSE
No. 59092
STATE OF FLORIDA
PROFESSIONAL ENGINEER

APR 2 5 2024

RICE ENGINEERING
105 School Creek Trail
Luxemburg, WI 54217
Phone: (920) 617-1042
Fax: (920) 617-1100
www.rice-inc.com

Florida Firm No: F-01000005061
Certificate of Authorization: #9090
Wayne K. Helmila
Registration No: 59092

Building Code: FBC 2023 — Project No: R24-03-052

babcockdavis
9300 73rd Avenue North
Brooklyn Park, MN 55428

TITLE: Roof Hatch, Hurricane Zone Series
Single Door, Single Wall Curb
Single Point Latch

	NAME	DATE
DRAWN	DKL	10/10/2016
RELEASED	IMT	3/21/2017

SIZE	DWG. NO.	REV
B	DOOR HATCH ASSEMBLY	D

WEIGHT: Weight
SHEET 03 OF 16

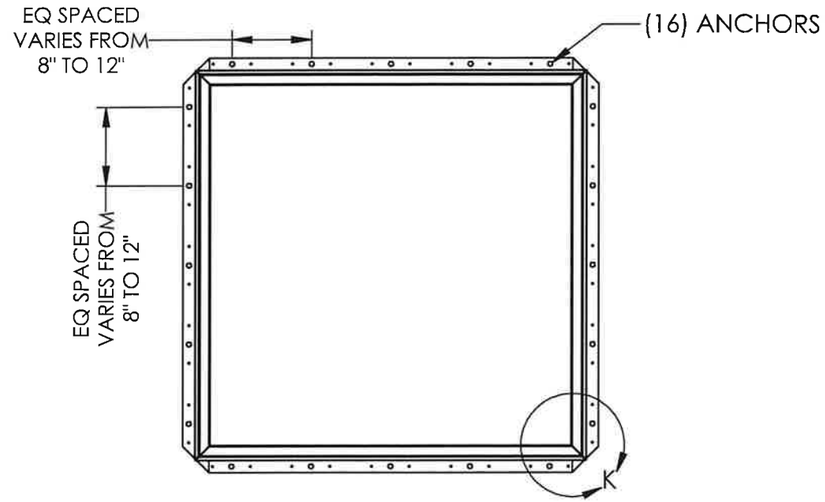

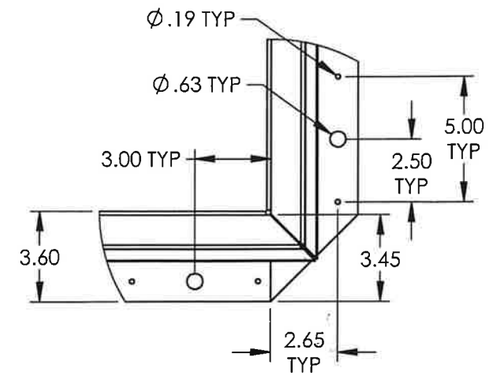

DETAIL K
SCALE 1 : 6

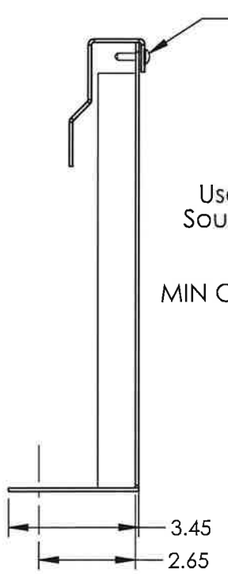

CURB
DETAIL

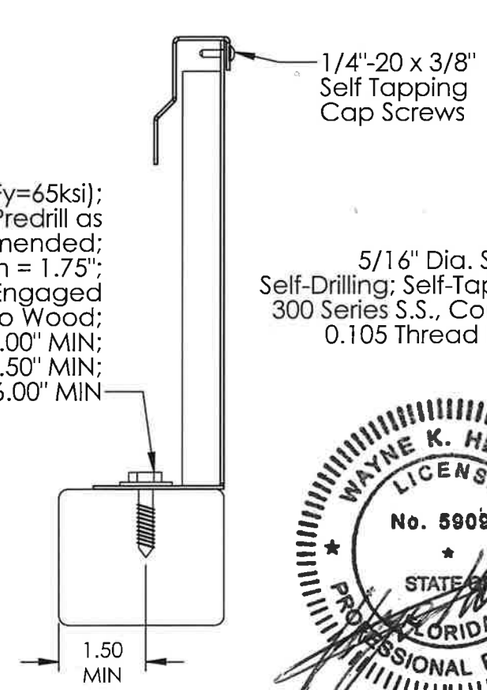

WOOD
CURB
WOOD S.G.= 0.55 MIN

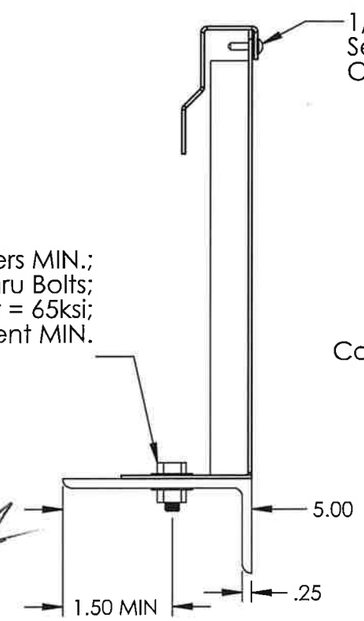

STEEL
CURB
(Fy = 33Ksi: MIN)
(THICKNESS = 0.105" MIN.)

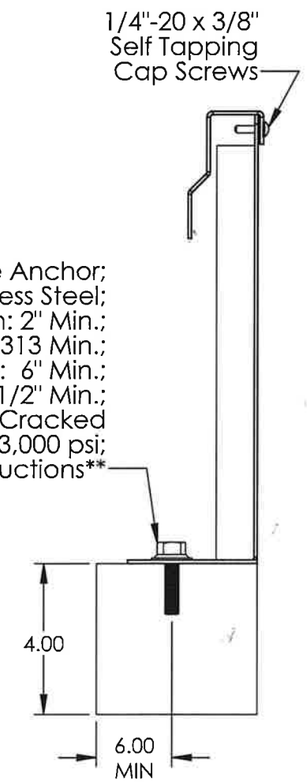

CONCRETE
CURB
3000 PSI MIN

PRODUCT REVISED
as complying with the Florida Building Code
NOA-No. 24-0904.09
Expiration Date 05/25/2027
By
Miami-Dade Product Control

WAYNE K. HELMILA
LICENSE
No. 59092
STATE OF FLORIDA
PROFESSIONAL ENGINEER

APR 2 5 2024

ANCHORING DETAIL
OPTIONS

RICE ENGINEERING
105 School Creek Trail
Luxemburg, WI 54217
Phone: (920) 617-1042
Fax: (920) 617-1100
www.rice-inc.com
Florida Firm No: F-01000005061
Certificate of Authorization: #9090
Wayne K. Helmila
Registration No: 59092

Building Code: FBC 2023 – Project Nr: R24-03-052

babcockdavis
9300 73rd Avenue North
Brooklyn Park, MN 55428

	NAME	DATE
DRAWN	DKL	10/10/2016
RELEASED	IMT	3/21/2017

TITLE: Roof Hatch, Hurricane Zone Series
Single Door, Single Wall Curb
Single Point Latch

SIZE	DWG. NO.	REV
B	DOOR HATCH ASSEMBLY	D

WEIGHT: Weight
SHEET 04 OF 16

COVER WELDMENT

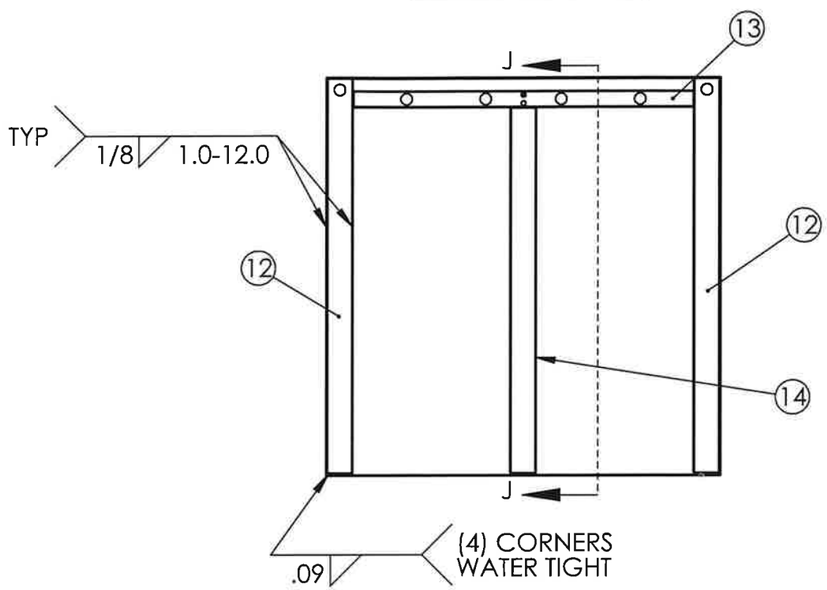

SECTION J-J

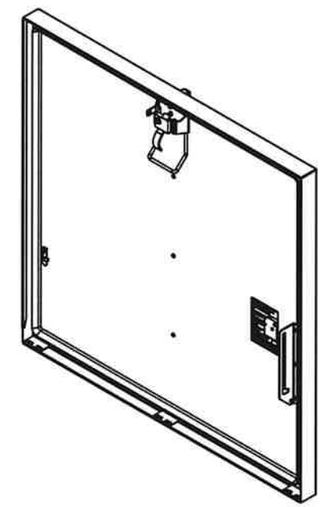

COVER ASSEMBLY

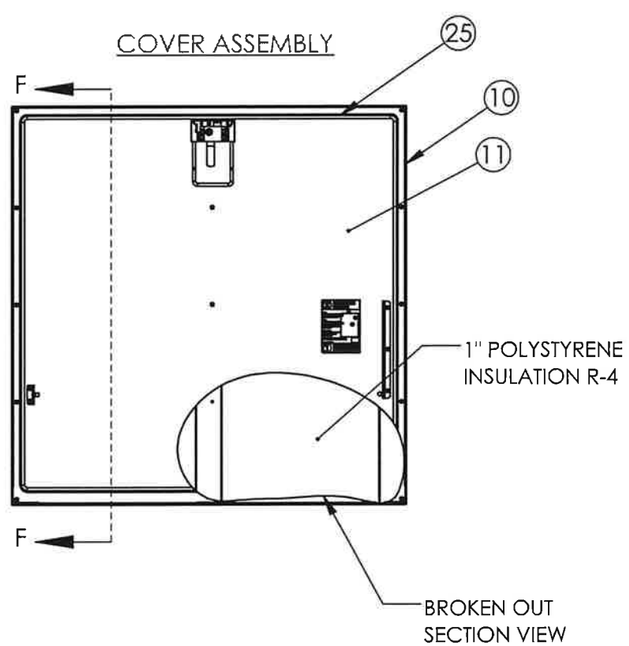

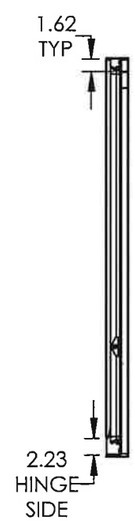

SECTION F-F

WAYNE K. HELMILA
LICENSE
No. 59092
STATE OF FLORIDA
PROFESSIONAL ENGINEER

APR 2 5 2024

PRODUCT REVISED
as complying with the Florida Building Code
NOA-No. 24-0904.09
Expiration Date 05/25/2027
By
Miami-Dade Product Control

RICE ENGINEERING
105 School Creek Trail
Luxemburg, WI 54217
Phone: (920) 617-1042
Fax: (920) 617-1100
www.rice-inc.com

Florida Firm No: F-01000005061
Certificate of Authorization: #9090
Wayne K. Helmila
Registration No: 59092

Building Code: FBC 2023 — Project #: R24-03-052

babcockdavis
9300 73rd Avenue North
Brooklyn Park, MN 55428

	NAME	DATE
DRAWN	DKL	10/10/2016
RELEASED	IMT	3/21/2017

TITLE: Roof Hatch, Hurricane Zone Series
Single Door, Single Wall Curb
Single Point Latch

SIZE	DWG. NO.	REV
B	DOOR HATCH ASSEMBLY	D

WEIGHT: Weight

SHEET 05 OF 16

CURB WELDMENT
CURB & CAP FLASHING

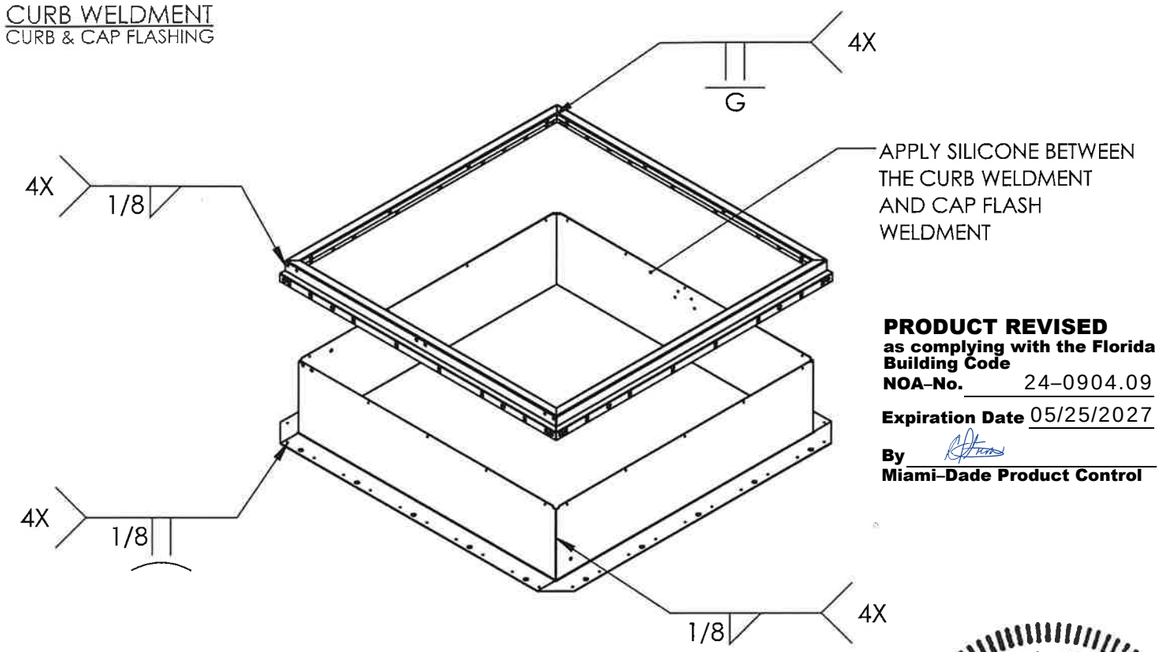

PRODUCT REVISED
as complying with the Florida Building Code
NOA-No. 24-0904.09
Expiration Date 05/25/2027
By
Miami-Dade Product Control

WAYNE K. HELMILA
LICENSE
No. 59092
STATE OF FLORIDA
PROFESSIONAL ENGINEER

APR 2 5 2024

LATCH CURB

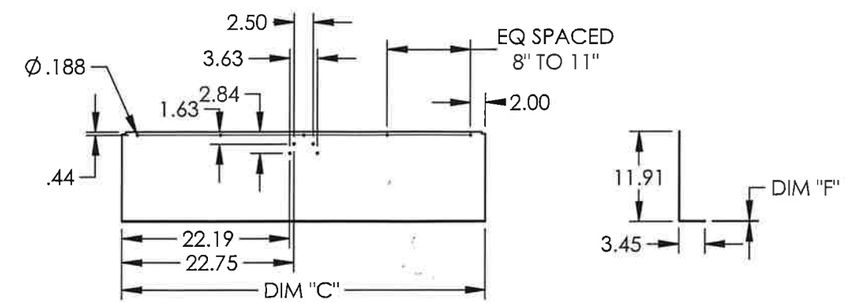

HATCH MATERIAL	DIM "C"	DIM "D"	DIM "E"	DIM "F"
GALVANEAL A653, 33KSI MIN	LENGTH	LENGTH/2 - 1.25	ø.218	.075 (14GA)
ALUMINUM 3003-H14	LENGTH	LENGTH/2 - 1.25	ø.391	.090 (11GA

HINGE CURB

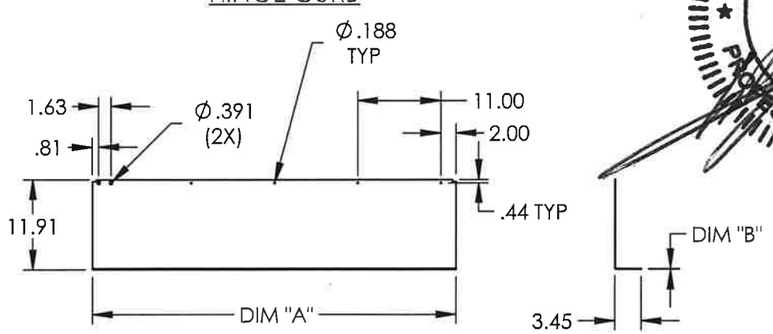

HATCH MATERIAL	DIM "A"	DIM "B"
GALVANEAL A653, 33KSI MIN	LENGTH	.075 (14GA)
ALUMINUM 3003-H14	LENGTH	.090 (11GA)

TOP & BOTTOM CURB

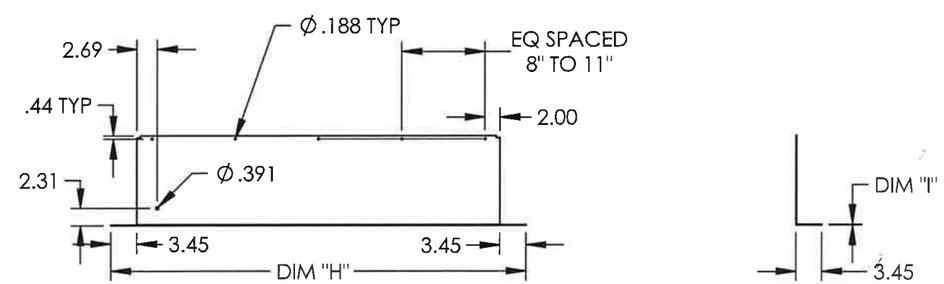

CURB	HATCH MATERIAL	DIM "H"	DIM "I"
TOP CURB	GALVANEAL A653, 33KSI MIN	WIDTH + 6.9	.075 (14GA)
TOP CURB	ALUMINUM 3003-H14	WIDTH + 6.9	.090 (11GA)
BOTTOM CURB	GALVANEAL A653, 33KSI MIN	WIDTH + 6.9	.075 (14GA)
BOTTOM CURB	ALUMINUM 3003-H14	WIDTH + 6.9	.090 (11GA)

RICE ENGINEERING
105 School Creek Trail
Luxemburg, WI 54217
Phone: (920) 617-1042
Fax: (920) 617-1100
www.rice-inc.com

Florida Firm No: F-01000005061
Certificate of Authorization: #9090
Wayne K. Helmila
Registration No: 59092

Building Code: FBC 2023 – Project No: R24-03-052

babcockdavis
9300 73rd Avenue North
Brooklyn Park, MN 55428

	NAME	DATE
DRAWN	DKL	10/10/2016
RELEASED	IMT	3/21/2017

TITLE:
Roof Hatch, Hurricane Zone Series
Single Door, Single Wall Curb
Single Point Latch

SIZE: B
DWG. NO.: DOOR HATCH ASSEMBLY
REV: D
WEIGHT: Weight
SHEET 06 OF 16

CAP FLASHING TYP EZ TAB LOCATIONS AND SAFETY RAIL MOUNTING HOLES

NOTE:
EZ TAB AND SAFETY RAIL MOUNTING HOLE DIMENTIONS ARE TYPICAL FROM BOTH ENDS OF ALL TYPES OF CAP FLASH.

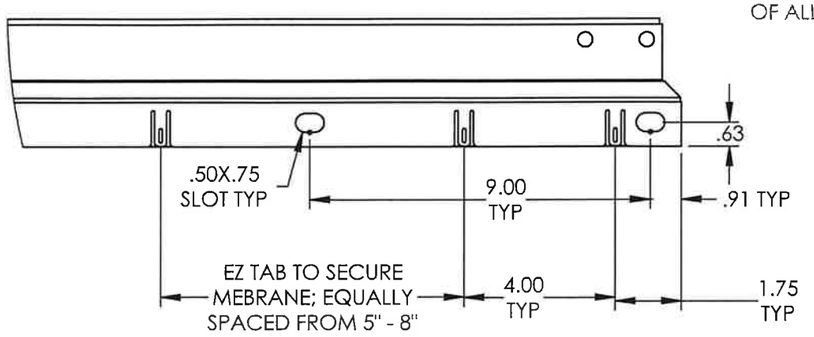

WAYNE K. HELMILA
LICENSE
No. 59092
STATE OF FLORIDA
PROFESSIONAL ENGINEER

APR 2 5 2024

PRODUCT REVISED
as complying with the Florida Building Code
NOA-No. 24-0904.09
Expiration Date 05/25/2027
By
Miami-Dade Product Control

LATCH CAP FLASHING

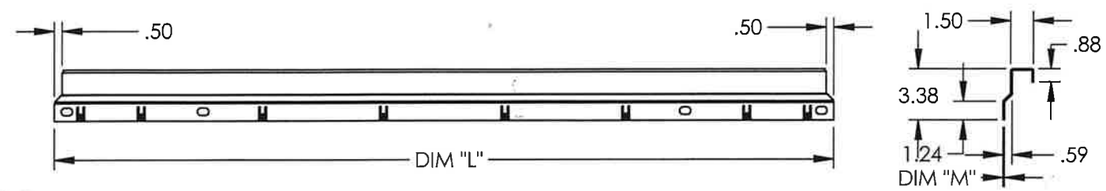

HATCH MATERIAL	DIM "L"	DIM "M"
GALVANEAL A653, 33KSI MIN	LENGTH + 3.51	.075 (14GA)
ALUMINUM 3003-H14	LENGTH + 3.51	.090 (11GA)

HINGE CAP FLASHING

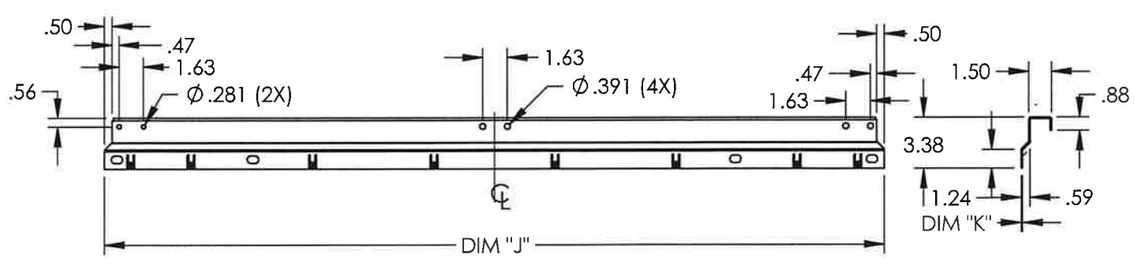

HATCH MATERIAL	DIM "J"	DIM "K"
GALVANEAL A653, 33KSI MIN	LENGTH + 3.51	.075 (14GA)
ALUMINUM 3003-H14	LENGTH + 3.51	.090 (11GA)

TOP & BOTTOM CAP FLASHING

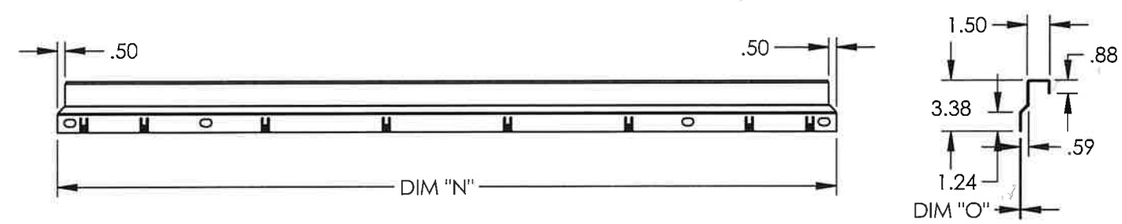

HATCH MATERIAL	DIM "N"	DIM "O"
GALVANEAL A653, 33KSI MIN	WIDTH + 3.56	.075 (14GA)
ALUMINUM 3003-H14	WIDTH + 3.56	.090 (11GA)

RICE ENGINEERING
105 School Creek Trail
Luxemburg, WI 54217
Phone: (920) 617-1042
Fax: (920) 617-1100
www.rice-inc.com

Florida Firm No: F-01000005061
Certificate of Authorization: #9090
Wayne K. Helmila
Registration No: 59092

Building Code: FBC 2023 — Project Nr: R24-93-052

babcockdavis
9300 73rd Avenue North
Brooklyn Park, MN 55428

	NAME	DATE
DRAWN	DKL	10/10/2016
RELEASED	IMT	3/21/2017

TITLE:
Roof Hatch, Hurricane Zone Series
Single Door, Single Wall Curb
Single Point Latch

SIZE: B
DWG. NO.: DOOR HATCH ASSEMBLY
REV: D
WEIGHT: Weight
SHEET 07 OF 16

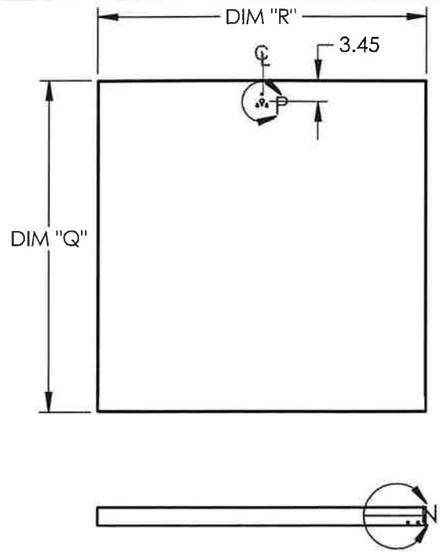

COVER

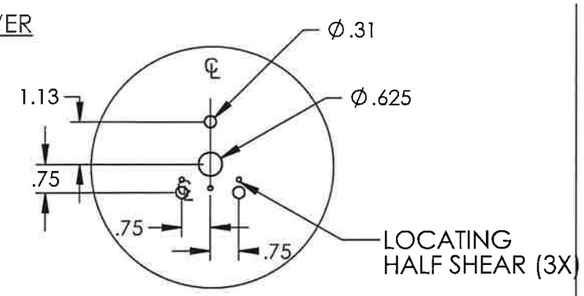

DETAIL P
SCALE 1 : 4

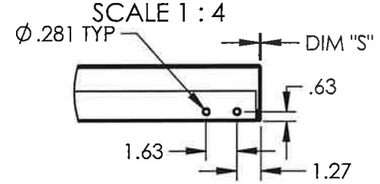

DETAIL N
SCALE 1 : 8

PRODUCT REVISED
as complying with the Florida Building Code
NOA-No. 24-0904.09
Expiration Date 05/25/2027
By
Miami-Dade Product Control

COVER LINER

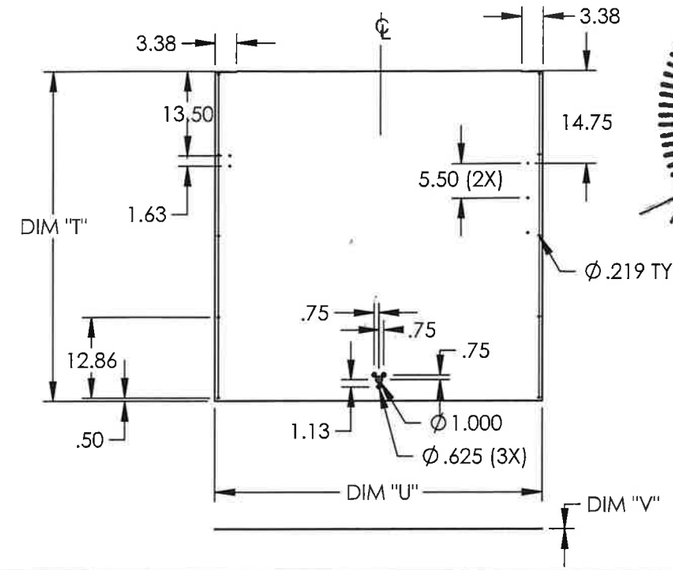

WAYNE K. HELMILA
LICENSE
No. 59092
STATE OF FLORIDA
PROFESSIONAL ENGINEER

APR 2 5 2024

HATCH MATERIAL	DIM "Q"	DIM "R"	DIM "S"
GALVANEAL A653, 33KSI MIN	WIDTH + 4.18	LENGTH + 4.09	.075 (14GA)
ALUMINUM 3003-H14	WIDTH + 4.18	LENGTH + 4.09	0.090

HATCH MATERIAL	DIM "T"	DIM "U"	DIM "V"
GALVANEAL A653, 33KSI MIN	WIDTH + 3.88	LENGTH + 3.88	.034 (22GA)
ALUMINUM 3003-H14	WIDTH + 3.88	LENGTH + 3.88	.040 (18 GA)

LATCH STIFFENER

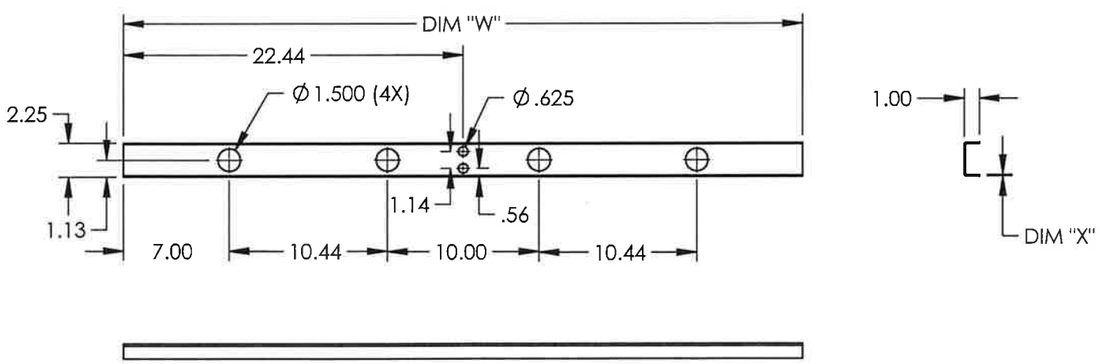

HATCH MATERIAL	DIM "W"	DIM "X"
GALVANEAL A653, 33KSI MIN	LENGTH + 3.75	.075 (14GA)
ALUMINUM 5032-H32	LENGTH + 3.75	.125

MIDDLE & SIDE STIFFENER

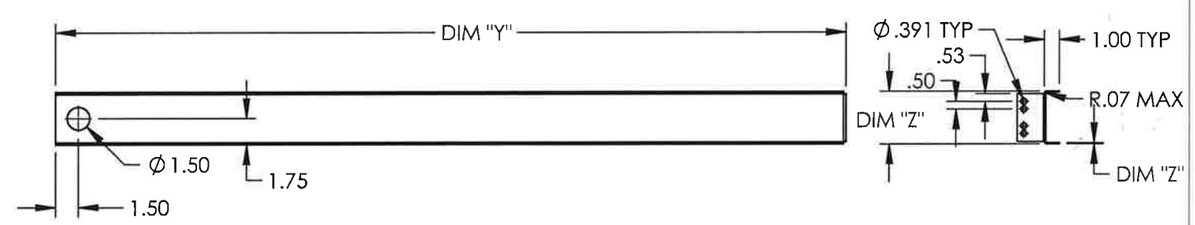

STIFFENER	HATCH MATERIAL	DIM "Y"	DIM "Z"	DIM "ZZ"
HINGE STIFFERNER	GALVANEAL A653, 33KSI MIN	LENGTH + 3.75	4.0	.075 (14GA)
HINGE STIFFERNER	ALUMINUM 5052-H32	LENGTH + 3.75	4.0	.125
SIDE STIFFENER	GALVANEAL A653, 33KSI MIN	WIDTH - 8.75	5.0	.075 (14GA)
SIDE STIFFENER	ALUMINUM 5052-H32	WIDTH - 8.75	5.0	.125

RICE ENGINEERING
105 School Creek Trail
Luxemburg, WI 54217
Phone: (920) 617-1042
Fax: (920) 617-1100
www.rice-inc.com

Florida Firm No: F-01000005061
Certificate of Authorization: #9090
Wayne K. Helmila
Registration No: 59092

Building Code: FBC 2023 — Project Nr: R24-03-052

babcockdavis
9300 73rd Avenue North
Brooklyn Park, MN 55428

	NAME	DATE
DRAWN	DKL	10/10/2016
RELEASED	IMT	3/21/2017

TITLE: Roof Hatch, Hurricane Zone Series
Single Door, Single Wall Curb
Single Point Latch

SIZE: B
DWG. NO.: DOOR HATCH ASSEMBLY
REV: D
WEIGHT: Weight
SHEET 08 OF 16

REVISIONS			
REV.	DESCRIPTION	DATE	APPROVED
A	RELEASE	11/9/21	AMB
B	ADDED STANDARD SIZES - BW3096, BW3672, BW3072 BW W X L S1T (WHERE W = 18" - 48" AND L = 60.25" - 96")*	1/12/23	PNN

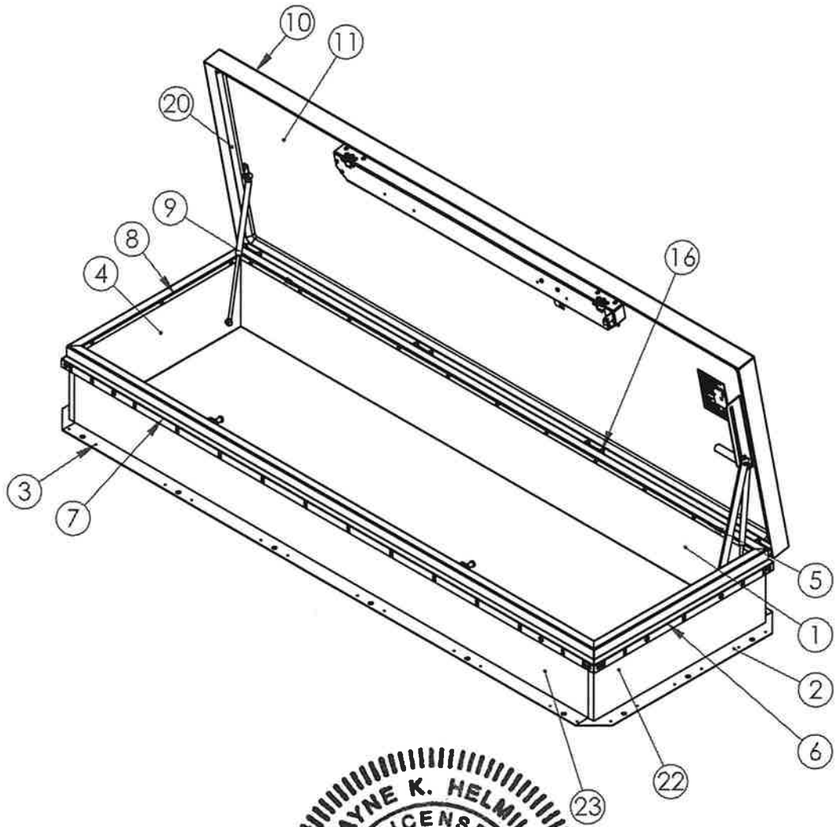

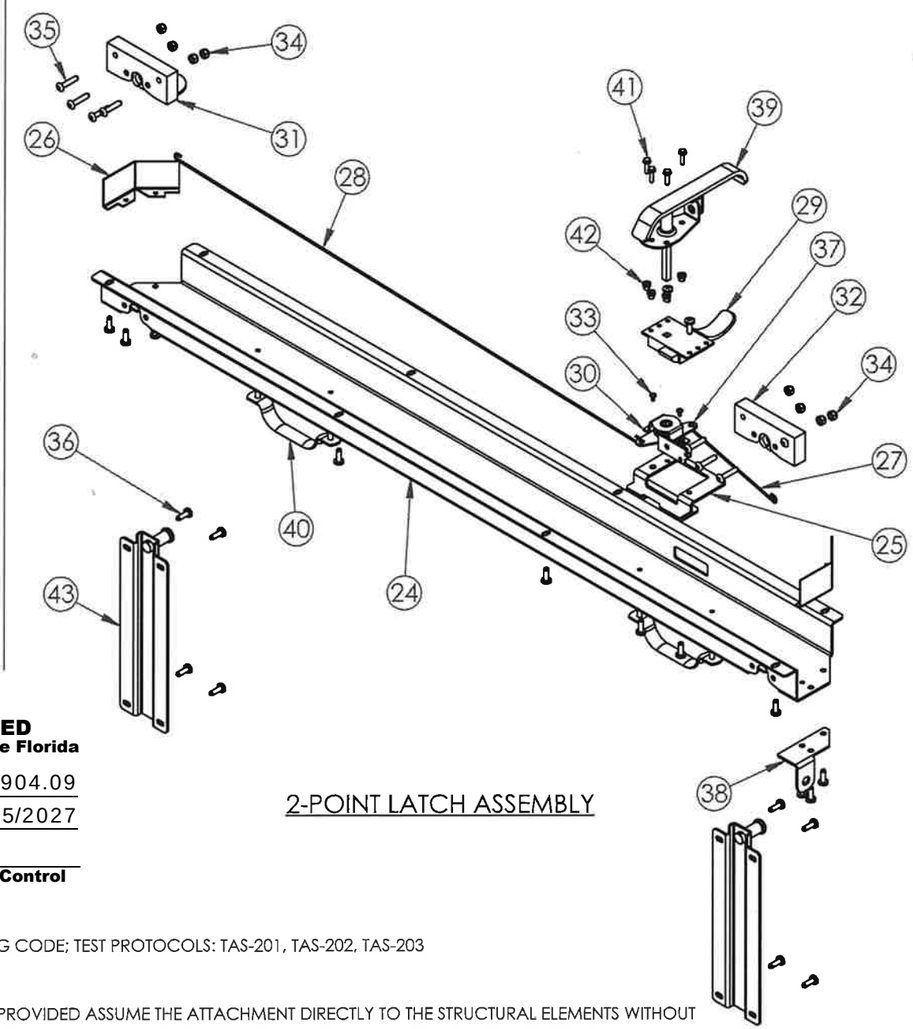

2-POINT LATCH ASSEMBLY

HOLD OPEN ARM ASSEMBLY

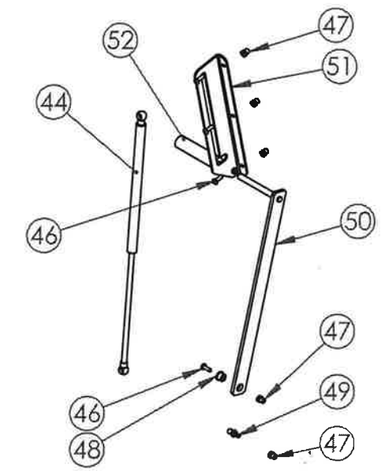

HINGE ASSEMBLY

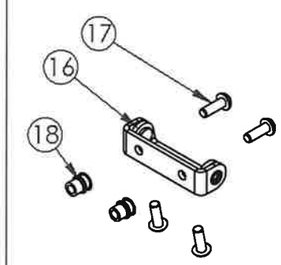

GAS SPRING ASSEMBLY

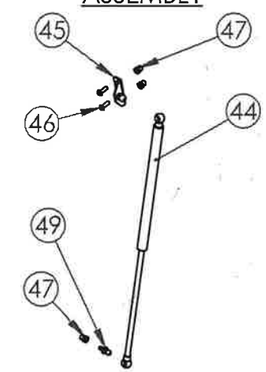

RICE
ENGINEERING
105 School Creek Trail
Luxemburg, WI 54217
Phone: (920) 617-1042
Fax: (920) 617-1100
www.rice-inc.com

Florida Firm No: F-01000005061
Certificate of Authorization: #9090
Wayne K. Helmila
Registration No: 59092

Building Code: FBC 2023 — Project Ver. R24-03-052

WAYNE K. HELMILA
LICENSE
No. 59092
STATE OF FLORIDA
PROFESSIONAL ENGINEER

APR 2 5 2024

PRODUCT REVISED
as complying with the Florida Building Code
NOA-No. 24-0904.09
Expiration Date 05/25/2027
By
Miami-Dade Product Control

1) THE DESIGN CONTAINED HEREIN IS DESIGNED AND TESTED IN ACCORDANCE WITH THE FLORIDA BUILDING CODE; TEST PROTOCOLS: TAS-201, TAS-202, TAS-203
2) THE SHORT-TERM LOAD FACTOR HAS NOT BEEN USED
3) PRODUCT APPROVED UP TO AN INSIDE AREA OF 20.00 SF (WIDTH * LENGTH ≤ 20.00 SF)
4) ATTACHMENT TO STRUCTURE SHALL MEET THE FOLLOWING ALLOWABLE LOAD CONDITIONS. THE VALUES PROVIDED ASSUME THE ATTACHMENT DIRECTLY TO THE STRUCTURAL ELEMENTS WITHOUT SPACE. ALLOWABLE MINIMUM LOAD VALUES PULLOUT: 1400 LBS. SHEAR 654 LB.
5) USE THE FASTENER MANUFACTURES RECOMMENDED SAFETY FACTOR. IF DIFFERENT CONDITIONS EXIST, CONTACT NYSTROM OR A FLORIDA LICENSED ENGINEER FOR A CONSULATION
6) ALL LABELS TO BE LOCATED IN APPROXIMATE LOCATIONS AS SHOWN
7) PROTECTION BETWEEN ALUMINUM & DISSIMILAR MATERIALS MUST BE PROVIDED PER ALUMINUM DESIGN MANUAL
8) ALL FASTENERS EXPOSED TO EXTERIOR CONDITIONS (EXCEPT FOR 300 SERIES STAINLESS STEEL) MUST BE SEALED WITH PROSOCO LIQUID FLASHING

DESIGN PRESSURE RATING	IMPACT RATING	WATER FILTRATION
+/- 70 PSF	LARGE MISSILE IMPACT	100%DP WITH ZERO WATER FILTRATION

babcockdavis
9300 73rd Avenue North
Brooklyn Park, MN 55428

TITLE: Roof Hatch, Personnel Series, Single Door, Single Wall Curb Two Point Latch

	NAME	DATE
DRAWN	AMB	8/17/2021
RELEASED	AMB	11/7/2023

SIZE	DWG. NO.	REV
B	Babcock PII Two Point Door Hatch Assembly	B
WEIGHT: Weight		SHEET 09 OF 16

ITEM	QTY.	PART#	DESCRIPTION
		CURB ASSEMBLY	
1	1	CurbHinge	CURB - HINGE SIDE
2	1	CurbBottom	CURB - BOTTOM SIDE
3	1	CurbTop	CURB - TOP SIDE
4	1	CurbLatch	CURB - LATCH SIDE
		CAP FLASH ASSEMBLY	
5	1	CflshHinge	CAP FLASH - HINGE SIDE
6	1	CflshBottom	CAP FLASH - BOTTOM SIDE
7	1	CflshTop	CAP FLASH - TOP SIDE
8	1	CflshLatch	CAP FLASH - LATCH SIDE
9	12	28544	BUTTON HEAD MACHINE SCREW, 1/4-20 x .75, (ZPS)
		COVER ASSEMBLY	
10	1	Cover	COVER
11	1	Liner	COVER LINER
12	1	StiffenerHinge	STIFFENER - HINGE SIDE
13	2	StiffenerWidth	STIFFENER - SIDES
14	1	StiffenerLatch	STIFFENER - LATCH SIDE
15	1	StiffenerMid	STIFFENER - MIDDLE
16	4	28719	ASSY, HINGE (ZPS)
17	16	28544	BUTTON HD TORX SCREW, 1/4 X .75, 3PT, (ZPS)
18	5	4359	RIVNUT, 1/4-20, .027-.165 GRIP
19	1	29898	BRKT, SUPPORT, HINGE, (ZPS)
		INSULATION AND GASKET	
20	2	6650	COVER GASKET, RH (EPDM),1.125" x 0.655 CLOSED CELL FOAM
21	12	RHInsulationCover	INSULATION, COVER (POLYSTYRENE R=4.0)
22	1	RHInsulationTopBottom	INSULATION, 1" POLYISO, R-6
23	2	RHInsulationHingeLatch	INSULATION, 1" POLYISO, R-6
		LATCH ASSEMBLY	
24	1	28908	LATCH HOUSING, 2-POINT, RH, (ZPS)
25	1	28910	LATCH CASE BRKT, 2-POINT, RH, (ZPS)
26	2	28909	LATCH HOUSING COVER,2-POINT, RH, (ZPS)
27	1	28938	LATCH ROD, SHORT, 2-POINT, RH, (ZPS)
28	1	28913	LATCH ROD,LONG, 2-POINT, RH, (ZPS)
29	1	1297	LATCH, SLAM, ZINC COATED,
30	1	28916	LATCH CENTER CASE, 2-POINT, RH, (ZPS)
31	1	6618	ROTARY, TOP, LEFT HAND, (ZPS)
32	1	6617	ROTARY, BTM, RIGHT HAND, (ZPS)
33	2	28939	BHMS, 10-32x5/16 Self Tread, (ZPS)
34	8	2944	NUT, HEX, LOCK, NYLON, 1/4-20, (ZPS)
35	8	28677	BUTTON HEAD MACHINE SCREW, 1/4-20 x 1.25, (ZPS)
36	17	28221	BUTTON HEAD MACHINE SCREW, 1/4-20 x .75, (ZPS)
37	1	29183	LATCH STOP,2PT MOD, (ZPS)
38	2	29674	BRACKET, PADLOCK, COVER, (ZPS)
39	1	28923	HDL, PADLOCKING, STL, SHORT, (ZPS)
41	4	2846	HEX WASHER HEAD TEK SCREW, 10-16 x .75, 3 PT, (ZPS)
42	4	6507	RIVNUT, 10-24, .020-.130 GRIP, (ZPS)
43	2	28835	STRIKER WDMT, CURB RH, (ZPS)

ITEM	QTY.	PART #	DESCRIPTION
		GAS SPRING/HOA ASSEMBLIES	
44A	-	30268	GAS SPRING, 150N
44A	-	29880	GAS SPRING, 250N
44A	-	29881	GAS SPRING, 500N
44A	-	30269	GAS SPRING, 600N
45	1	29878	BRKT, BALL STUD, SPG, (ZPS)
46	6	28221	BUTTON HD TORX MACHINE SCREW, 1/4 X .75, (ZPS)
47	8	4359	RIVNUT, 1/4-20, .027-.165 GRIP (ALUM)
48	1	29895	BEARING, HOA, (ZPS)
49	2	29879	BRKT, BALL STUD, SPG, (ZPS)
50	1	29863	ARM, HOA, STL, (ZPS)
51	1	29890	BRKT, HOA/SPG, (ZPS)
52	1	2934	HDL, RED GRIP, (VINYL)
		LABELS & MISC.	
64	-	3021	PAINT, POWDER
65	1	26504	LABEL, MADE IN THE USA
66	1	3114	LABEL, LOGO, LARGE
67	2	3036	LABEL, CAUTION, HANDLE
68	1	1851	LABEL, RELEASE HANDLE
69	1	28883	LABEL, PRODUCT APPROVED (ALUMINUM FOIL)
71	-	28096	SILICONE

PRODUCT REVISED
as complying with the Florida Building Code
NOA-No. 24-0904.09
Expiration Date 05/25/2027
By
Miami-Dade Product Control

WAYNE K. HELMILA
LICENSE
No. 59092
STATE OF FLORIDA
PROFESSIONAL ENGINEER

APR 2 5 2024

RICE
ENGINEERING
105 School Creek Trail
Luxemburg, WI 54217
Phone: (920) 617-1042
Fax: (920) 617-1100
www.rice-inc.com

Florida Firm No: F-01000005061
Certificate of Authorization: #9090
Wayne K. Helmila
Registration No: 59092

Building Code: FBC 2023 -- Project Nr: R24-03-052

STANDARD MODEL NUMBERS:

BG3096	BA3096	BW3096
BG3672	BA3672	BW3672
BG3072	BA3072	BW3072

CUSTOM MODEL NUMBERS:
BG W X L S1T (WHERE W = 18" - 48" AND L = 60.25" - 96")*
BA W X L S1T (WHERE W = 18" - 48" AND L = 60.25" - 96")*
BW W X L S1T (WHERE W = 18" - 48" AND L = 60.25" - 96")*
*AREA NOT TO EXCEED 20 SQ. FT.

1. MATERIAL THICKNESS TO BE DIFFERENT ON STEEL AND ALUMINUM MODELS
2. SPRING QTY AND TYPE VARIES PER HATCH SIZE TO MEET ≤ 30 LBS COVER OPENING PRESSURE
3. REQUIRED ON ALUMINUM VERSONS
4. NOT REQUIRED ON ALUMINUM VERSONS
5. NOT SHOWN ON ASSEMBLY

NOTES:
NUMBER OF ANCHORS RANGES BETWEEN 2 AND 6 PER SPACING DIMENSIONS ON SHEET 4.

babcockdavis
9300 73rd Avenue North
Brooklyn Park, MN 55428

TITLE: Roof Hatch, Personnel Series, Single Door, Single Wall Curb Two Point Latch

	NAME	DATE
DRAWN	AMB	8/17/2021
RELEASED	AMB	11/7/2023

SIZE	DWG. NO.	REV
B	Babcock PII Two Point Door Hatch Assembly	B

WEIGHT: Weight
SHEET 10 OF 16

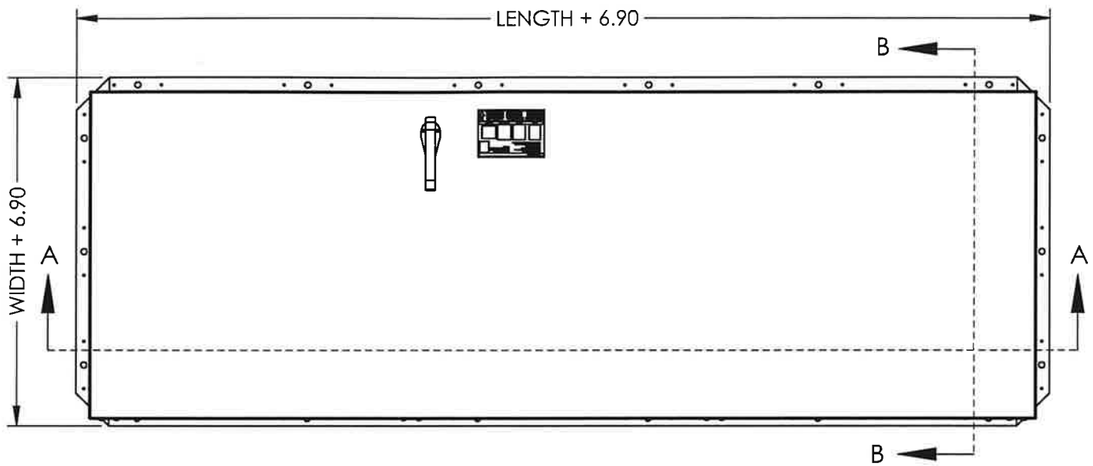

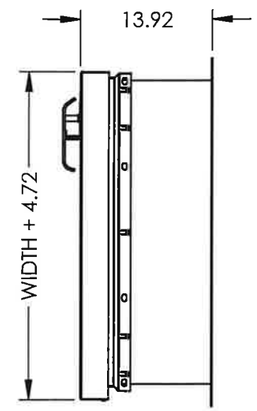

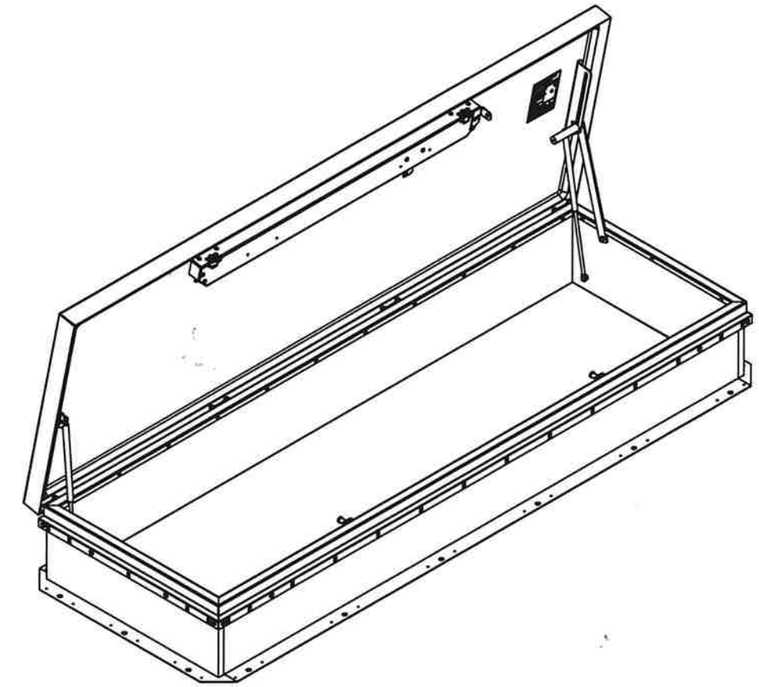

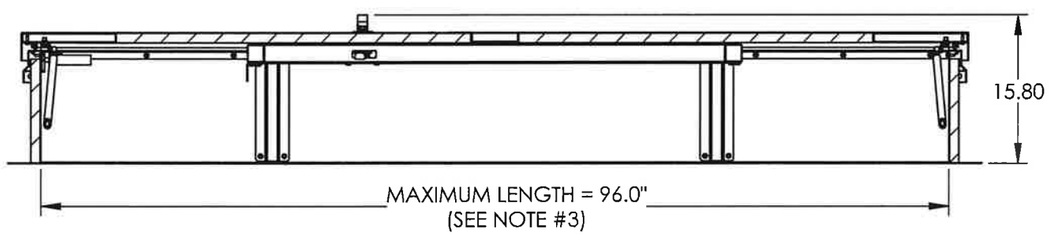

SECTION A-A

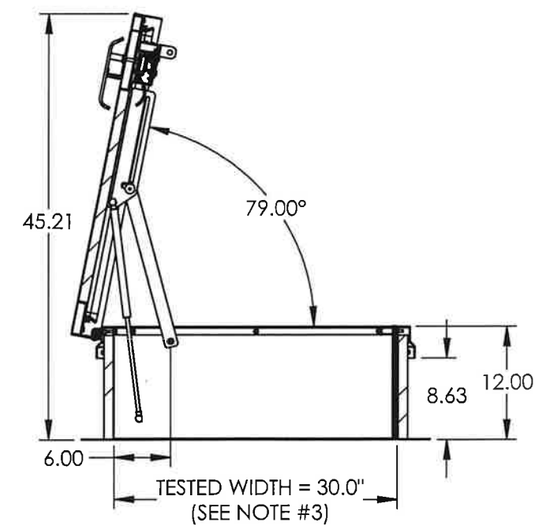

SECTION B-B

WAYNE K. HELMILA
LICENSE
No. 59092
STATE
FLORIDA
PROFESSIONAL ENGINEER

APR 2 5 2024

PRODUCT REVISED
as complying with the Florida Building Code
NOA-No. 24-0904.09
Expiration Date 05/25/2027
By
Miami-Dade Product Control

RICE ENGINEERING
105 School Creek Trail
Luxemburg, WI 54217
Phone: (920) 617-1042
Fax: (920) 617-1100
www.rice-inc.com

Florida Firm No: F-01000005061
Certificate of Authorization: #9090
Wayne K. Helmila
Registration No: 59092

Building Code: FBC 2023 — Project Nr: R24-03-052

babcockdavis
9300 73rd Avenue North
Brooklyn Park, MN 55428

	NAME	DATE
DRAWN	AMB	8/17/2021
RELEASED	AMB	11/7/2023

TITLE: Roof Hatch, Personnel Series, Single Door, Single Wall Curb Two Point Latch

SIZE	DWG. NO.	REV
B	Babcock PII Two Point Door Hatch Assembly	B

WEIGHT: Weight

SHEET 11 OF 16

RICE ENGINEERING
105 School Creek Trail
Luxemburg, WI 54217
Phone: (920) 617-1042
Fax: (920) 617-1100
www.rice-inc.com

Florida Firm No: F-01000005061
Certificate of Authorization: #9090
Wayne K. Helmila
Registration No: 59092

Building Code: FBC 2023 — Project No: F24-03-052

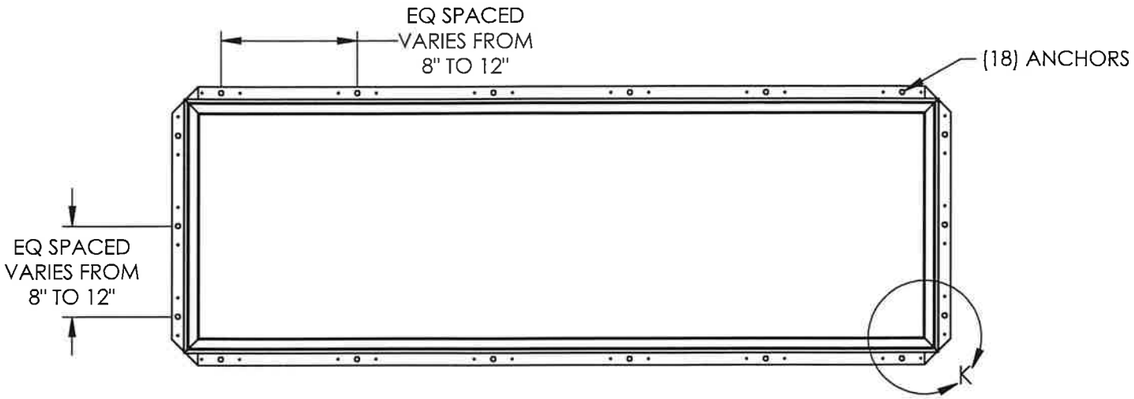

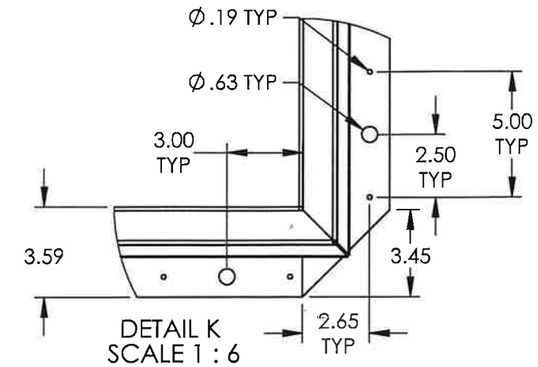

DETAIL K
SCALE 1 : 6

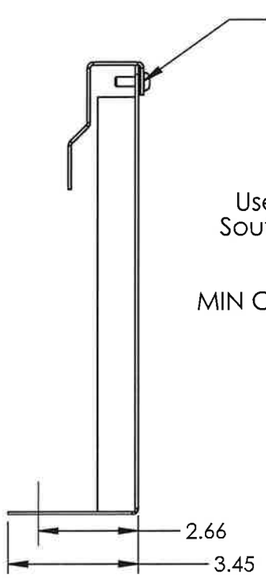

CURB
DETAIL

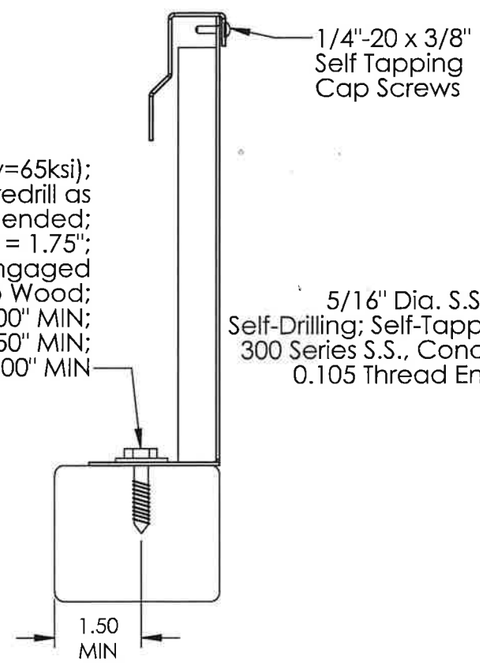

WOOD
CURB
WOOD S.G.= 0.55 MIN

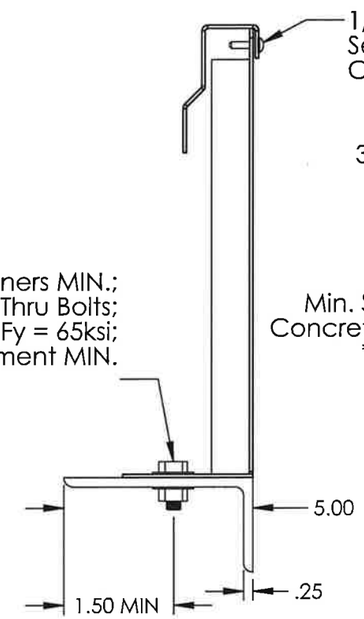

STEEL
CURB
(Fy = 33Ksi: MIN)
(THICKNESS = 0.105" MIN.)

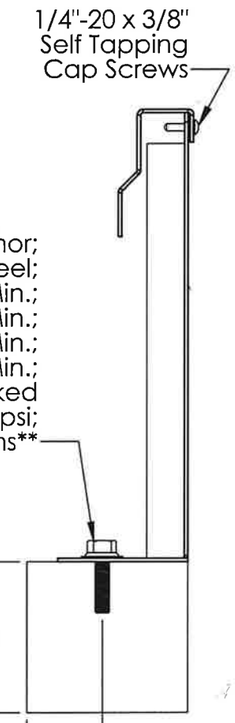

CONCRETE
CURB
3000 PSI MIN

WAYNE K. HELMILA
LICENSE
No. 59092
STATE OF
FLORIDA
PROFESSIONAL ENGINEER

APR 2 5 2024

ANCHORING DETAIL
OPTIONS

PRODUCT REVISED
as complying with the Florida Building Code
NOA-No. 24-0904.09
Expiration Date 05/25/2027
By
Miami-Dade Product Control

NOTE: Anchorage designed for 70 psf Lateral and 70 psf Uplift (Applied Independently)

babcockdavis
9300 73rd Avenue North
Brooklyn Park, MN 55428

	NAME	DATE
DRAWN	AMB	8/17/2021
RELEASED	AMB	11/7/2023

TITLE: Roof Hatch, Personnel Series, Single Door, Single Wall Curb Two Point Latch

SIZE: B
DWG. NO.: Babcock PII Two Point Door Hatch Assembly
REV: B
WEIGHT: Weight
SHEET 12 OF 16

RICE ENGINEERING
105 School Creek Trail
Luxemburg, WI 54217
Phone: (920) 617-1042
Fax: (920) 617-1100
www.rice-inc.com

Florida Firm No: F-01000005061
Certificate of Authorization: #9090
Wayne K. Helmila
Registration No: 59092

Building Code: FBC 2023 — Project No: R24-03-052

COVER WELDMENT

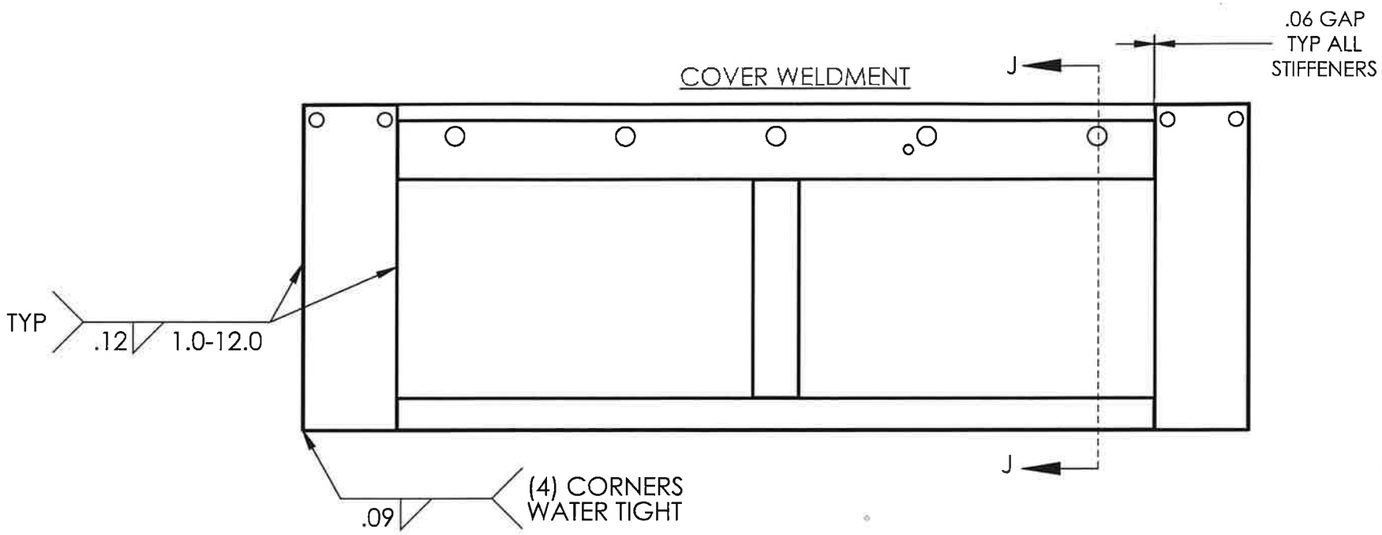

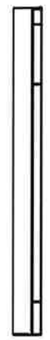

SECTION J-J

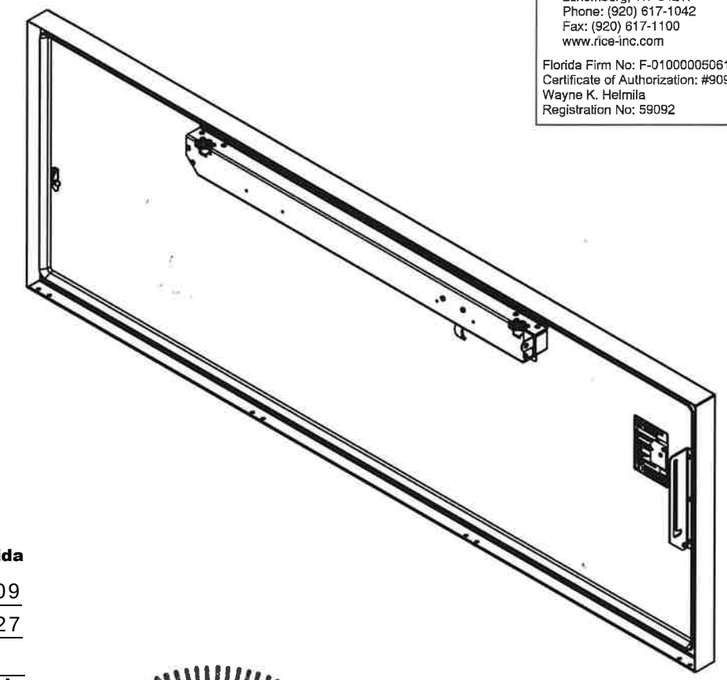

PRODUCT REVISED
as complying with the Florida Building Code
NOA-No. 24-0904.09
Expiration Date 05/25/2027
By _____
Miami-Dade Product Control

COVER ASSEMBLY

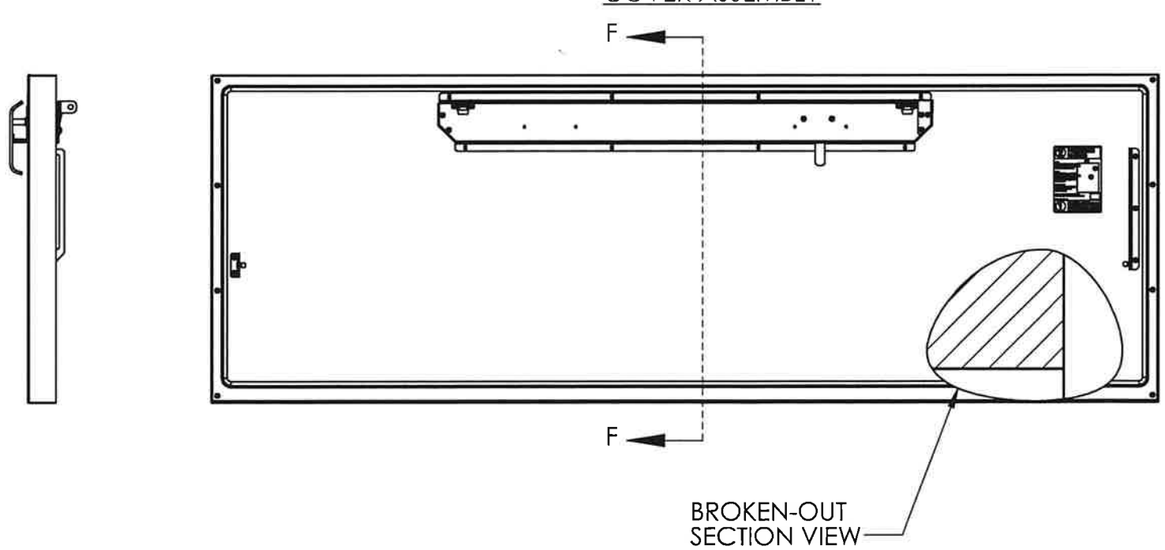

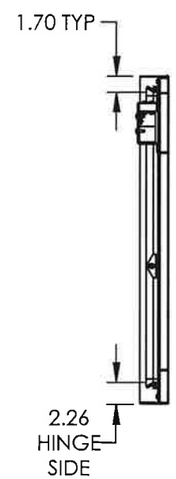

SECTION F-F

WAYNE K. HELMILA
LICENSE
No. 59092
STATE OF
FLORIDA
PROFESSIONAL ENGINEER

APR 2 5 2024

babcockdavis
9300 73rd Avenue North
Brooklyn Park, MN 55428

TITLE: Roof Hatch, Personnel Series, Single Door, Single Wall Curb Two Point Latch

	NAME	DATE
DRAWN	AMB	8/17/2021
RELEASED	AMB	11/7/2023

SIZE: B
DWG. NO.: Babcock PII Two Point Door Hatch Assembly
REV: B
WEIGHT: Weight
SHEET 13 OF 16

CURB WELDMENT
CURB & CAP FLASHING

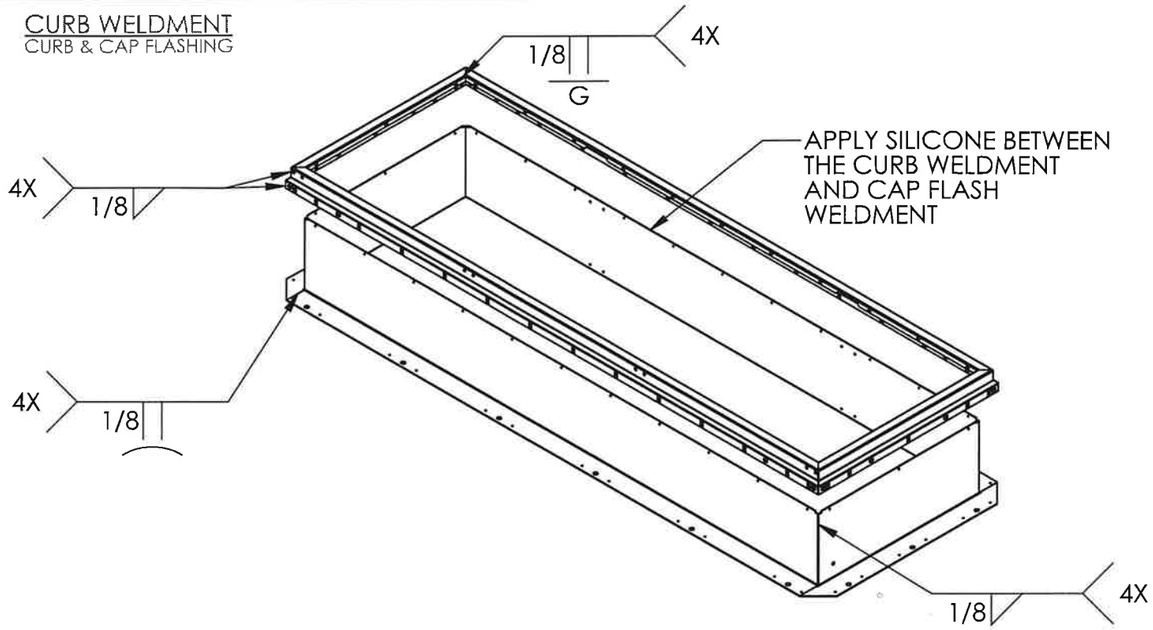

LATCH CURB

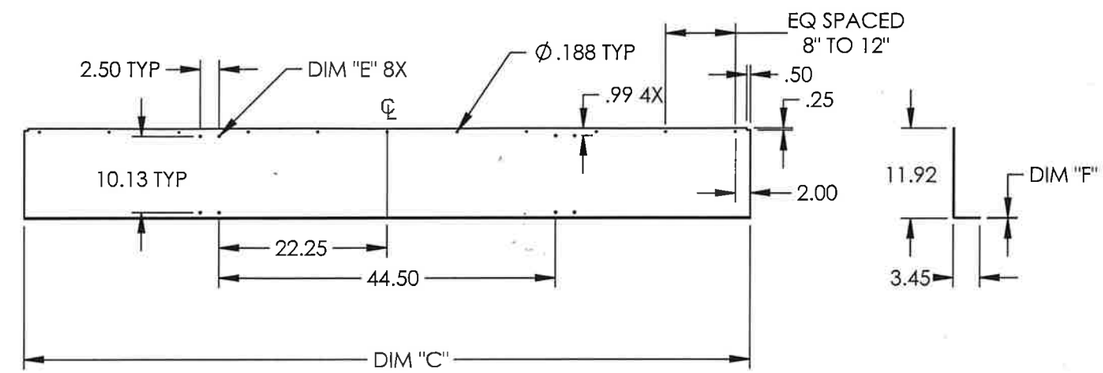

HATCH MATERIAL	DIM "C"	DIM "D"	DIM "E"	DIM "F"
GALVANEAL A653 33KSI MIN	LENGTH	LENGTH/2 - 1.25	ø.218	.075 (14GA)
ALUMINUM 3003-H14	LENGTH	LENGTH/2 - 1.25	ø.391	.090 (11GA

WAYNE K. HELMILA
LICENSE
No. 59092
STATE OF FLORIDA
PROFESSIONAL ENGINEER

APR 2 5 2024

PRODUCT REVISED
as complying with the Florida Building Code
NOA-No. 24-0904.09
Expiration Date 05/25/2027
By
Miami-Dade Product Control

TOP & BOTTOM CURB

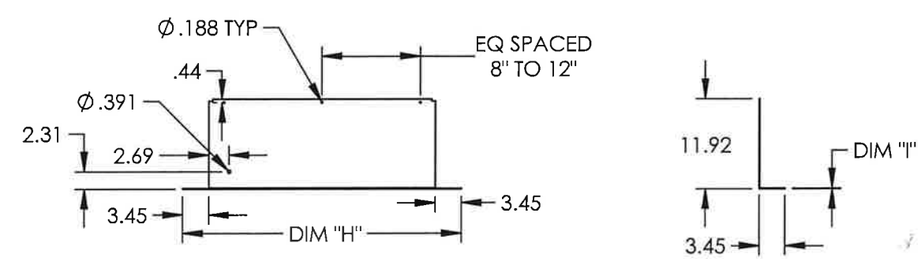

CURB	HATCH MATERIAL	DIM "H"	DIM "I"
TOP CURB	GALVANEAL A653 33KSI MIN	WIDTH + 6.9	.075 (14GA)
TOP CURB	ALUMINUM 3003-H14	WIDTH + 6.9	.090 (11GA
BOTTOM CURB	GALVANEAL A653 33KSI MIN	WIDTH + 6.9	.075 (14GA)
BOTTOM CURB	ALUMINUM 3003-H14	WIDTH + 6.9	.090 (11GA

HINGE CURB

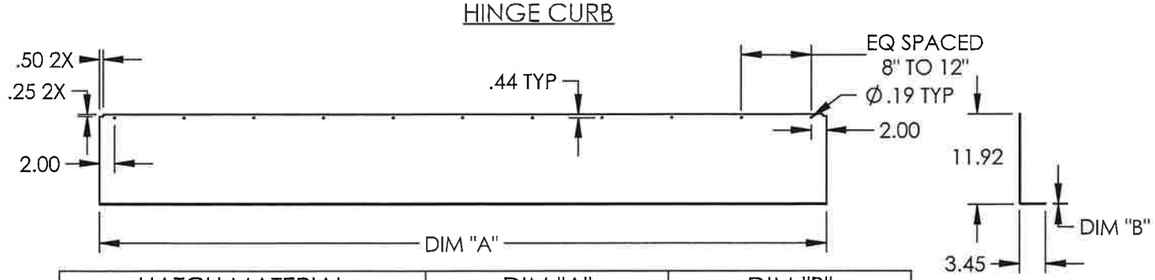

HATCH MATERIAL	DIM "A"	DIM "B"
GALVANEAL A653 33KSI MIN	LENGTH	.075 (14GA)
ALUMINUM 3003-H14	LENGTH	.090 (11GA)

RICE ENGINEERING
105 School Creek Trail
Luxemburg, WI 54217
Phone: (920) 617-1042
Fax: (920) 617-1100
www.rice-inc.com

Florida Firm No: F-01000005061
Certificate of Authorization: #9090
Wayne K. Helmila
Registration No: 59092

Building Code: FBC 2023 — Project#: R24-03-052

babcockdavis
9300 73rd Avenue North
Brooklyn Park, MN 55428

	NAME	DATE
DRAWN	AMB	8/17/2021
RELEASED	AMB	11/7/2023

TITLE: Roof Hatch, Personnel Series, Single Door, Single Wall Curb Two Point Latch

SIZE: B
DWG. NO.: Babcock PII Two Point Door Hatch Assembly
REV: B
WEIGHT: Weight
SHEET 14 OF 16

CAP FLASHING TYP EZ TAP LOCATIONS

NOTE:
EZ TAB DIMENTIONS ARE TYP FROM BOTH ENDS OF ALL TYPES OF CAP FLASH.

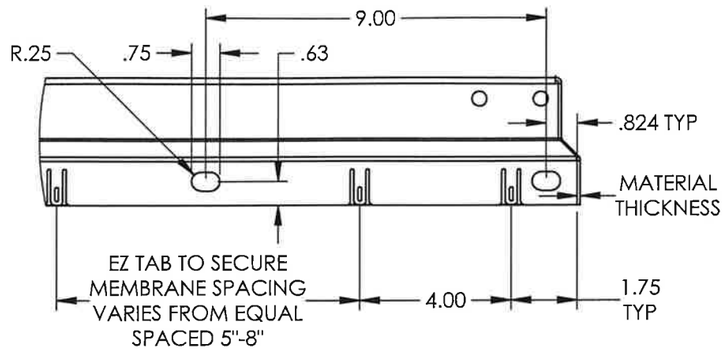

LATCH CAP FLASHING

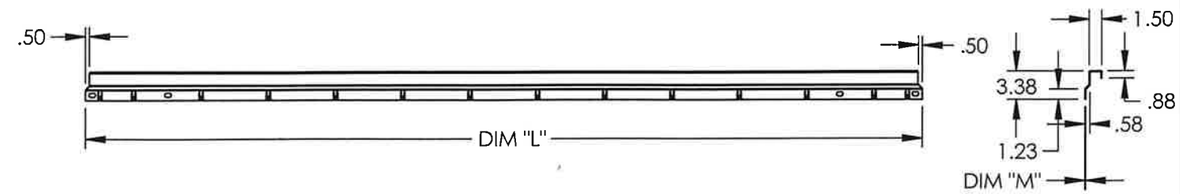

HATCH MATERIAL	DIM "L"	DIM "M"
GALVANEAL A653, 33KSI MIN	LENGTH + 3.51	.075 (14GA)
3003 ALUMINUM-H14	LENGTH + 3.51	.090 (11GA)

HINGE CAP FLASHING

PRODUCT REVISED
as complying with the Florida Building Code
NOA-No. 24-0904.09
Expiration Date 05/25/2027
By
Miami-Dade Product Control

WAYNE K. HELMILA LICENSE No. 59092 STATE OF FLORIDA PROFESSIONAL ENGINEER

APR 2 5 2024

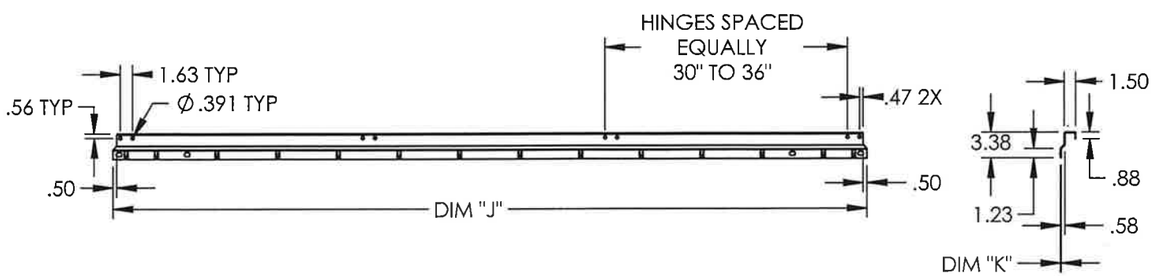

HATCH MATERIAL	DIM "J"	DIM "K"
GALVANEAL A653, 33KSI MIN	LENGTH + 3.51	.075 (14GA)
ALUMINUM 3003-H14	LENGTH + 3.51	.090 (11GA)

TOP & BOTTOM CAP FLASHING

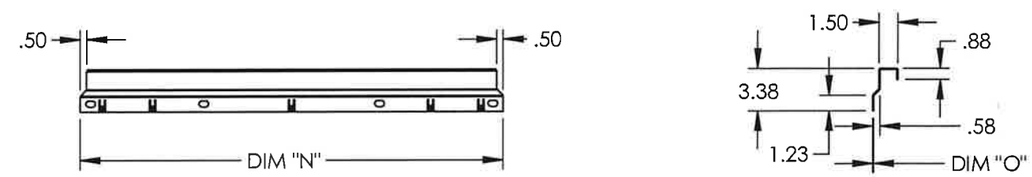

HATCH MATERIAL	DIM "N"	DIM "O"
GALVANEAL A653, 33KSI MIN	WIDTH + 3.56	.075 (14GA)
ALUMINUM 3003-H14	WIDTH + 3.56	.090 (11GA)

RICE ENGINEERING
105 School Creek Trail
Luxemburg, WI 54217
Phone: (920) 617-1042
Fax: (920) 617-1100
www.rice-inc.com
Florida Firm No: F-01000005061
Certificate of Authorization: #9090
Wayne K. Helmila
Registration No: 59092

Building Code: FBC 2023 -- Project No: R24-03-052

babcockdavis
9300 73rd Avenue North
Brooklyn Park, MN 55428

	NAME	DATE
DRAWN	AMB	8/17/2021
RELEASED	AMB	11/7/2023

TITLE: Roof Hatch, Personnel Series, Single Door, Single Wall Curb Two Point Latch

SIZE: B
DWG. NO.: Babcock PII Two Point Door Hatch Assembly
REV: B
WEIGHT: Weight
SHEET 15 OF 16

COVER

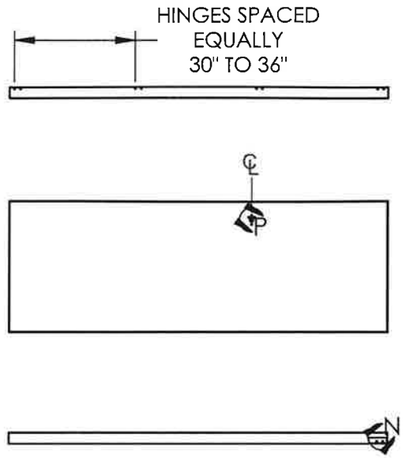

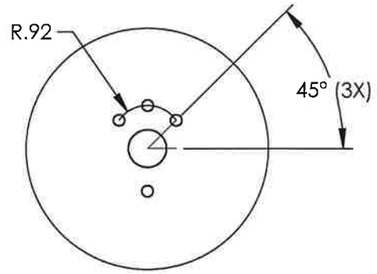

DETAIL P
SCALE 1 : 4

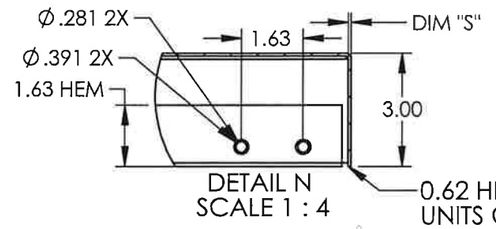

DETAIL N
SCALE 1 : 4

PRODUCT REVISED
as complying with the Florida Building Code
NOA-No. 24-0904.09
Expiration Date 05/25/2027
By
Miami-Dade Product Control

HATCH MATERIAL	DIM "Q"	DIM "R"	DIM "S"
GALVANEAL A653, 33KSI MIN	WIDTH + 4.72	LENGTH + 4.09	.075 (14GA)
ALUMINUM 3003-H14	WIDTH + 4.72	LENGTH + 4.09	0.090

COVER LINER

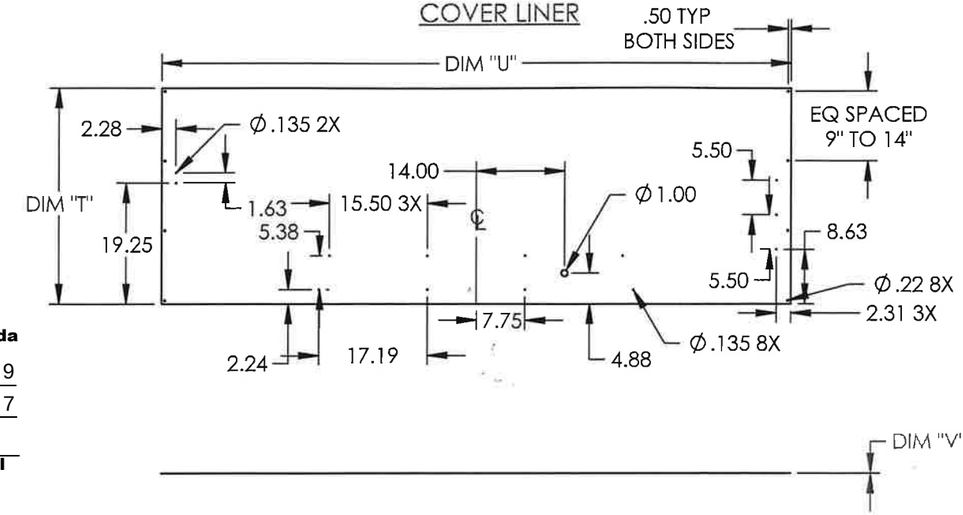

HATCH MATERIAL	DIM "T"	DIM "U"	DIM "V"
GALVANEAL A653, 33KSI MIN	WIDTH + 4.375	LENGTH + 3.875	0.034 (21 GA)
ALUMINUM 3003-H14	WIDTH + 4.375	LENGTH + 3.875	0.040

HINGE STIFFENER

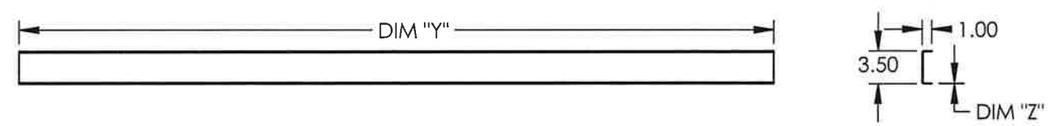

HATCH MATERIAL	DIM "Y"	DIM "Z"
GALVANEAL A653, 33KSI MIN	LENGTH - 16.125	.075 (14GA)
ALUMINUM 5052-H32	LENGTH - 16.125	.125

LATCH STIFFENER

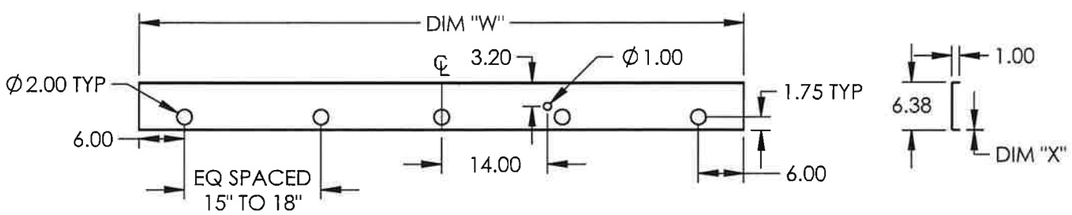

HATCH MATERIAL	DIM "W"	DIM "X"
GALVANEAL A653, 33 KSI MIN	LENGTH - 16.125	.075 (14GA)
ALUMINUM 5052-H32	LENGTH - 16.125	.125

SIDE STIFFENER

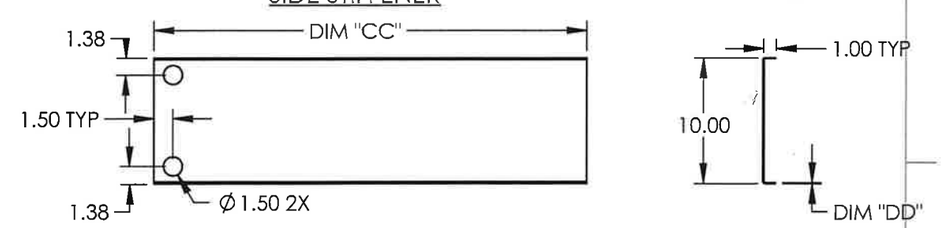

HATCH MATERIAL	DIM "CC"	DIM "DD"
GALVANEAL A653, 33 KSI MIN	WIDTH + 4.375	.075 (14GA)
ALUMINUM 5052-H32	WIDTH + 4.375	.125

MIDDLE STIFFENER

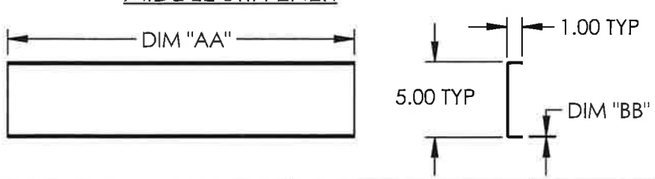

HATCH MATERIAL	DIM "AA"	DIM "BB"
GALVANEAL A653, 33 KSI MIN	WIDTH - 7.125	.075 (14GA)
ALUMINUM 5052-H32	WIDTH - 7.125	.125

WAYNE K. HELMILA
LICENSE
No. 59092
STATE OF FLORIDA
PROFESSIONAL ENGINEER

APR 2 5 2024

RICE ENGINEERING
105 School Creek Trail
Luxemburg, WI 54217
Phone: (920) 617-1042
Fax: (920) 617-1100
www.rice-inc.com

Florida Firm No: F-01000005061
Certificate of Authorization: #9090
Wayne K. Helmila
Registration No: 59092

Building Code: FBC 2023 -- Project No: R24-03-052

babcockdavis
9300 73rd Avenue North
Brooklyn Park, MN 55428

TITLE: Roof Hatch, Personnel Series, Single Door, Single Wall Curb Two Point Latch

	NAME	DATE
DRAWN	AMB	8/17/2021
RELEASED	AMB	11/7/2023

SIZE: B
DWG. NO.: Babcock PII Two Point Door Hatch Assembly
REV: B
WEIGHT: Weight
SHEET 16 OF 16