MIAMI-DADE COUNTY
DEPARTMENT OF REGULATORY AND ECONOMIC RESOURCES (RER)
BOARD AND CODE ADMINISTRATION DIVISION

MIAMI-DADE COUNTY
PRODUCT CONTROL SECTION
11805 SW 26 Street, Room 208
Miami, Florida 33175-2474
T (786) 315-2590 F (786) 315-2599
www.miamidade.gov/economy

NOTICE OF ACCEPTANCE (NOA)

Poma & Sons, Inc. (dba Poma Architectural metals)
2049 S.W. Poma Drive
Palm City, Florida 34990

SCOPE:
This NOA is being issued under the applicable rules and regulations governing the use of construction materials. The documentation submitted has been reviewed and accepted by Miami-Dade County RER-Product Control Section to be used in Miami Dade County and other areas where allowed by the Authority Having Jurisdiction (AHJ).

This NOA shall not be valid after the expiration date stated below. The Miami-Dade County Product Control Section (In Miami Dade County) and/or the AHJ (in areas other than Miami Dade County) reserve the right to have this product or material tested for quality assurance purposes. If this product or material fails to perform in the accepted manner, the manufacturer will incur the expense of such testing and the AHJ may immediately revoke, modify, or suspend the use of such product or material within their jurisdiction. RER reserves the right to revoke this acceptance if it is determined by Miami-Dade County Product Control Section that this product or material fails to meet the requirements of the applicable building code.

This product is approved as described herein and has been designed to comply with the High Velocity Hurricane Zone of the Florida Building Code.

DESCRIPTION: Infinity Postless Glass Railing System

APPROVAL DOCUMENT: Drawing No. IGRS 58-1, titled " Infinity Postless Glass Railing System ", sheets 1 through 16 of 16, prepared by Poma & Sons, Inc., dated February 2018, last revised on 10/31/24, signed and sealed by Timothy C. Boudah, P.E., on 10/31/24, bearing the Miami-Dade County Product Control revision stamp with the Notice of Acceptance number & the expiration date by the Miami-Dade County Product Control Section.

MISSILE IMPACT RATING: Large and Small Missile Impact Resistant

LABELING: Each unit shall bear a permanent label with the manufacturer's name or logo, city, state and the following statement: "Miami-Dade County Product Control Approved", unless otherwise noted herein.

RENEWAL of this NOA shall be considered after a renewal application has been filed and there has been no change in the applicable building code negatively affecting the performance of this product.

TERMINATION of this NOA will occur after the expiration date or if there has been a revision or change in the materials, use, and/or manufacture of the product or process. Misuse of this NOA as an endorsement of any product, for sales, advertising or any other purposes shall automatically terminate this NOA. Failure to comply with any section of this NOA shall be cause for termination and removal of NOA.

ADVERTISEMENT: The NOA number preceded by the words Miami-Dade County, Florida, and followed by the expiration date may be displayed in advertising literature. If any portion of the NOA is displayed, then it shall be done in its entirety.

INSPECTION: A copy of this entire NOA shall be provided to the user by the manufacturer or its distributors and shall be available for inspection at the job site at the request of the Building Official. The structural adequacy of the supporting structures is not part of this approval & shall be reviewed by the corresponding Building Dept.

This NOA **revises NOA #23-0216.02** and consists of this page 1, evidence submitted pages E-1, E-2 and E-3 as well as approval document mentioned above.
The submitted documentation was reviewed by **Helmy A. Makar, P.E., M.S.**

MIAMI-DADE COUNTY APPROVED

Helmy A. Makar
12/26/24

NOA No. 24-1203.05
Expiration Date: 04/26/2028
Approval Date: 12/26/2024

Poma & Sons, Inc. (dba Poma Architectural metals)

NOTICE OF ACCEPTANCE: EVIDENCE SUBMITTED

1. EVIDENCE SUBMITTED UNDER PREVIOUS APPROVAL #18-0312.03

A. DRAWINGS

1. *Drawing No. IGRS 58-1, titled " Infinity Postless Glass Railing System ", sheets 1 through 16 of 16, prepared by Poma & Sons, Inc., dated February 2018, signed and sealed by Timothy C. Boudah, P.E., on March 06, 2018.*

B. TESTS

1. *Test Report No. **BT-AE-17-001B**, by Blackwater Testing, Inc., dated August 01, 2017, signed and sealed by Constantin Bortes, P.E., testing Infinity Postless Glass Railing System for concentrated and distributed loads per FBC 1618.4.6, Impacts per ANSI Z97.1, Static Wind Load per TAS 202-94 and Large Missile Impact per TAS 201-94.*
2. *Test Report No. **BT-AE-17-001C**, by Blackwater Testing, Inc., dated August 01, 2017, signed and sealed by Constantin Bortes, P.E., testing Infinity Postless Glass Railing System for concentrated and distributed loads per FBC 1618.4.6, Impacts per ANSI Z97.1, Static Wind Load per TAS 202-94 and Large Missile Impact per TAS 201-94.*

C. CALCULATIONS

1. *Calculation titled "Infinity Postless Glass Railing System", 103 pages, prepared by Timothy C. Boudah, P.E., dated February 2018, signed and sealed by Timothy C. Boudah, P.E., on March 06, 2018.*

D. QUALITY ASSURANCE

1. *By Miami-Dade County Department of Regulatory and Economic Resources.*

E. MATERIAL CERTIFICATIONS

1. *None.*

F. STATEMENTS

1. ***Florida Building Code, 2014 Edition and 2017 Edition Compliance Letter** prepared by Timothy C. Boudah, P.E., dated March 06, 2018, signed and sealed by Timothy C. Boudah, P.E., on March 06, 2018.*

2. EVIDENCE SUBMITTED UNDER PREVIOUS APPROVAL #21-0219.07

A. DRAWINGS

1. *Drawing No. IGRS 58-1, titled " Infinity Postless Glass Railing System ", sheets 1 through 16 of 16, prepared by Poma & Sons, Inc., dated February 2018, signed and sealed by Timothy C. Boudah, P.E., on April 25, 2022.*

B. TESTS

1. *None.*

Helmy A. Makar, P.E., M.S.
Product Control Section Supervisor
NOA No. 24-1203.05
Expiration Date: 04/26/2028
Approval Date: 12/26/2024

C. CALCULATIONS

1. *Calculation titled "Infinity Postless Glass Railing System", 103 pages, prepared by Timothy C. Boudah, P.E., dated April 25, 2022, signed and sealed by Timothy C. Boudah, P.E., on April 25, 2022.*

D. QUALITY ASSURANCE

1. *By Miami-Dade County Department of Regulatory and Economic Resources.*

E. MATERIAL CERTIFICATIONS

1. *None.*

F. STATEMENTS

1. ***Florida Building Code, 2020 Edition Compliance Letter** prepared by Timothy C. Boudah, P.E., dated April 25, 2022, signed and sealed by Timothy C. Boudah, P.E., on April 25, 2022.*

3. EVIDENCE SUBMITTED UNDER PREVIOUS APPROVAL #23-0216.02

A. DRAWINGS

1. *None.*

B. TESTS

1. *None.*

C. CALCULATIONS

1. *None.*

D. QUALITY ASSURANCE

1. *By Miami-Dade County Department of Regulatory and Economic Resources.*

E. MATERIAL CERTIFICATIONS

1. *None.*

F. STATEMENTS

1. ***Florida Building Code, 2020 Edition Compliance Letter** prepared by Timothy C. Boudah, P.E., dated April 25, 2022, signed and sealed by Timothy C. Boudah, P.E., on April 25, 2022.*

4. NEW EVIDENCE SUBMITTED

A. DRAWINGS

1. *Drawing No. IGRS 58-1, titled " Infinity Postless Glass Railing System ", sheets 1 through 16 of 16, prepared by Poma & Sons, Inc., dated February 2018, last revised on 10/31/24, signed and sealed by Timothy C. Boudah, P.E., on 10/31/24.*

Helmy A. Makar, P.E., M.S.
Product Control Section Supervisor
NOA No. 24-1203.05
Expiration Date: 04/26/2028
Approval Date: 12/26/2024

B. TESTS

1. None.

C. CALCULATIONS

1. None.

D. QUALITY ASSURANCE

1. By Miami-Dade County Department of Regulatory and Economic Resources.

E. MATERIAL CERTIFICATIONS

1. None.

F. STATEMENTS

1. ***Florida Building Code, 2023 Edition Compliance Letter*** *prepared by Timothy C. Boudah, P.E., dated Oct. 31, 2024, signed and sealed by Timothy C. Boudah, P.E., on Oct. 31, 2024.*

Helmy A. Makar, P.E., M.S.
Product Control Section Supervisor
NOA No. 24-1203.05
Expiration Date: 04/26/2028
Approval Date: 12/26/2024

MANUFACTURED BY:

poma

POMA ARCHITECTURAL METALS

INFINITY

Postless Glass Railing System

TESTED IN ACCORDANCE WITH MIAMI-DADE COUNTY PRODUCT CONTROL REQUIREMENTS

MAXIMUM ALLOWABLE WIND DESIGN PRESSURE:	
DRY GLAZED =	+115 PSF & -115 PSF
WET GLAZED =	+120 PSF & -120 PSF

TABLE OF CONTENTS

SHT. NO	SHEET TITLE
1	GENERAL NOTES
2	DRY GLAZED-T BOLT SYSTEM PLAN & ELEVATION
3	DRY GLAZED-ANCHOR PIN SYSTEM PLAN & ELEVATION
4	WET GLAZED-T BOLT SYSTEM PLAN & ELEVATION
5	WET GLAZED-T BOLT SYSTEM PLAN & ELEVATION
6	T BOLT ANCHOR SYSTEM RAILING SECTION DETAIL
7	ANCHOR PIN SYSTEM RAILING SECTION DETAIL
8	RAILING SECTION DIE PRINTS & PARTS
9	T-BOLT & ANCHOR PIN DETAILS
10	SUPPLEMENTAL RAILING ASSEMBLY COMPONENTS
11	ANCHOR PIN ANCHOR SYSTEM-EXPLODED ISOMETRIC VIEW
12	T BOLT ANCHOR SYSTEM-EXPLODED ISOMETRIC VIEW
13	ANCHOR PIN ANCHORING SYSTEM SPACING TABLE
14	ANCHOR PIN ANCHORING SYSTEM SPACING TABLE
15	T BOLT ANCHORING SYSTEM SPACING TABLE
16	T BOLT ANCHORING SYSTEM SPACING TABLE

GENERAL NOTES:

MATERIALS:

A. ALUMINUM FRAMING ELEMENTS TO CONSIST OF ALLOY 6061, 6005, 6063 (TEMPER T5 OR T6) & 5052 WITH MINIMUM MECHANICAL PROPERTIES SPECIFIED IN TABLE A.4.3 OF THE 2020 ALUMINUM DESIGN MANUAL AS PUBLISHED BY THE ALUMINUM ASSOCIATION, INC., ARLINGTON, VIRGINIA. 1

B. MECHANICAL FASTENERS TO BE TYPE 304, 316 OR 410 STAINLESS STEEL UNLESS OTHERWISE NOTED.

C. WELD FILLER ALLOYS SHALL MEET AWS A5.10 STANDARDS, AND AS A MINIMUM, SHALL CONSIST OF ALUMINUM ALLOY 4043 or 5356 (100% Ar) PER AWS D1.2 TABLE 4.2.

ALUMINUM FINISHES:

A. PRETREATMENT:
(6) STAGE NON-ALKALINE PRETREATMENT SYSTEM WITH AMORPHOUS CHROME PHOSPHATE CONVERSION COATING; 40-90 MG PER FT².

B. PAINT SYSTEM: CUSTOMER SELECTION OF ONE OF THE FOLLOWING:
1. E.S.P. APPLIED SINGLE COAT SUPER-DURABLE POLYESTER POWDER COAT- MEETS AAMA 2604
2. E.S.P. APPLIED SINGLE COAT HIGH PERFORMANCE FLUOROPOLYMER POWDER COAT- MEETS AAMA 2605
3. E.S.P. APPLIED (2) COAT HIGH PERFORMANCE FLUOROPOLYMER POWDER COAT- EXCEEDS AAMA 2605
4. E.S.P. APPLIED (3) COAT HIGH PERFORMANCE 70% PVDF LIQUID COATING SYSTEM-EXCEEDS AAMA 2605

C. COLOR: CUSTOMER CHOICE OF STANDARD AVAILABLE COLORS
POMA AND ITS' AFFILIATED COMPANIES ARE APPROVED APPLICATORS FOR THE FOLLOWING COATING MANUFACTURERS:
A. PPG INDUSTRIES
B. IFS COATINGS
C. SHERWIN WILLIAMS
D. NORTEK POWDER COATINGS
E. TIGER DRYLAC POWDER COATINGS

CONSTRUCTION:

SHOP FABRICATION AND ASSEMBLY SHALL BE DONE IN ACCORDANCE WITH POMA STANDARDS WITH THE DETAILS SPECIFICALLY AS SHOWN AND NOTED ON THESE DRAWINGS. SHOP CONNECTIONS SHALL BE DONE IN A NEAT, WORKMANLIKE MANNER UTILIZING THE MIG AND/OR TIG WELDING PROCESSES. EXPOSED WELDS WILL REMAIN UNFINISHED UNLESS NOTED OTHERWISE IN THESE DRAWINGS. ANY WELDS NOT SPECIFICALLY SHOWN OR NOTED WILL BE SIZED AND LOCATED BY POMA TO ENSURE PROPER FABRICATION. ALL COMPONENTS SHALL BE FIRMLY ATTACHED TO ONE ANOTHER TO ASSURE FIXED FASTENING FOR THE LIFE OF THE PRODUCT(S). CORNERS SHALL BE HAIRLINE FITTED AND/OR WELDED TO INSURE MAXIMUM STRENGTH DURING USAGE.

NOTE: THE DESIGN OF CERTAIN FACTORY COATED ARCHITECTURAL PRODUCTS MAY REQUIRE THE PLACEMENT OF WEEP HOLES TO PROPERLY EXHAUST PRETREATMENT CHEMICALS USED DURING THE COATING PROCESS. THESE WEEP HOLES SHALL BE LOCATED & SIZED ACCORDINGLY BY POMA DURING THE FABRICATION PROCESSES, AND TO THE EXTENT POSSIBLE, SHALL BE STRATEGICALLY PLACED IN AN INCONSPICUOUS LOCATION. CERTAIN DESIGN LIMITATIONS DO EXIST THAT MAY PREVENT WEEP HOLES FROM BEING CONCEALED FROM NORMAL VIEW. TYPICAL WEEP HOLE SIZE IS 1/4" DIA. BUT IN ANY INSTANCE SHALL NOT EXCEED 1/2".

DELIVERY:

DELIVER AND STORE ALL PRODUCT(S) IN A DRY AND SAFE LOCATION IN CLOSE PROXIMITY TO STAGING AREA DESIGNATED AND PROVIDED BY THE GENERAL CONTRACTOR OR OWNER. HANDLE PRODUCT(S) WITH EXTREME CARE TO AVOID MARRING OF THE FINISHED PRODUCT.

INSTALLATION:

1. PRODUCT(S) SHOULD BE INSTALLED FROM THE TOP FLOOR DOWN WHEN POSSIBLE AND ONLY WHEN ALL MASONRY WORK AND PAINTING IS COMPLETED.
2. INSTALL INFINITY BOTTOM BASE RAIL WITH EITHER POMA'S STAINLESS STEEL ANCHOR PIN ASSEMBLY CONSISTING OF 1-1/8" Ø ANCHOR PIN INSTALLED BY MEANS OF SLEEVING, HAMMER DRILLING OR CORE-DRILLING A 1-1/2" MINIMUM TO 4" MAXIMUM DIAMETER HOLE, OR WITH POMA'S 1/2"Ø T-BOLT ANCHOR ASSEMBLY INSTALLED BY MEANS OF HAMMER DRILLED HOLES AT 5/8" MINIMUM TO 1" MAXIMUM DIAMETER. THESE ANCHORING SYSTEMS SHALL BE INSTALLED AS DETAILED AND NOTED IN THESE DRAWINGS USING EPOXY ADHESIVE OR GROUT ANCHORING PRODUCTS AS SPECIFIED IN THESE DRAWINGS, OR ADHESIVE ANCHORING PRODUCTS WHICH HAVE A BOND CHARACTERISTIC VALUE DETERMINED BY PRODUCT TESTING, IN CONFORMANCE WITH ASTM E488, OR PUBLISHED ANCHOR PRODUCT MANUFACTURER'S TEST DATA, PERFORMED IN ACCORDANCE WITH ACI 355.4.
3. FIELD SPLICE LOCATIONS OF PRODUCT(S) COMPONENTS SHALL BE DETERMINED BY POMA TO BEST ACCOMMODATE FABRICATION, PAINTING, SHIPPING AND SITE SPECIFIC INSTALLATION. FIELD SPLICES SHALL BE ACCOMPLISHED BY BUTTING ONE MEMBER OF ONE SECTION TO ANOTHER, USING AN INTERIOR/EXTERIOR SLEEVE INSERT OR CONCEALED/EXPOSED CONNECTION TAB OR ANGLE AND FURTHER SECURED BY MEANS OF STAINLESS STEEL FASTENERS, OR NON FERROUS, SELF EXPANDING RIVETS. IT SHOULD BE NOTED THAT, ALTHOUGH ALL FIELD SPLICES WILL BE DONE IN A WORKMANLIKE MANNER, THESE JOINTS MAY BE VISIBLE UPON COMPLETION AND MAY ALSO REQUIRE A MIN. GAP OF 1/8" PER TWENTY FOOT SECTION OF EACH MEMBER, TO ALLOW FOR EXPANSION AND CONTRACTION OF PRODUCT(S) AND/OR STRUCTURE.

NOTE: THE INSTALLING CONTRACTOR SHALL BE RESPONSIBLE TO APPLY A SUITABLE ISOLATION MATERIAL TO ALL ALUMINUM SURFACES THAT MAY CONTACT DISSIMILAR METALS OR LIME-MORTAR, CONCRETE OR OTHER MASONRY MATERIALS. SUITABLE PRODUCTS INCLUDE: HEAVY BODIED BITUMINOUS PAINT, METHACRYLATE LACQUER OR NEOPRENE ISOLATION SHIMS, TAPES OR GASKETS AND HIGH GRADE TWO PART EPOXY ADHESIVES.

HOST STRUCTURE QUALIFICATION NOTES:

1. THE PROJECT ENGINEER OF RECORD AND GENERAL CONTRACTOR ARE RESPONSIBLE FOR PROPER DESIGNING AND CONSTRUCTION OF SUITABLE SUBSTRATE FOR ATTACHMENT OF SYSTEMS.
2. FOR EXISTING STRUCTURES IT IS ASSUMED THAT THE THE PROJECT ENGINEER OF RECORD AND GENERAL CONTRACTOR HAVE VERIFIED THE EXISTING HOST STRUCTURE HAS BEEN DESIGNED AND CONSTRUCTED TO SAFELY SUPPORT THE LOADS IMPOSED BY THE INFINITY (POSTLESS) GLASS RAILING SYSTEM.
3. IT IS RECOMMENDED THAT THE PROJECT ENGINEER OF RECORD AND GENERAL CONTRACTOR REVIEW AS-BUILT CONSTRUCTION RECORDS FOR THE EXISTING HOST STRUCTURE AND/OR VERIFY EXISTING CONCRETE SLABS ARE PROVIDED WITH ADEQUATE REINFORCEMENTS TO SUPPORT IMPOSED RAILING SYSTEM LOADS.
4. FOR EXISTING STRUCTURES POMA RECOMMENDS THAT IN-SITU CONCRETE SAMPLING AND CORE TESTS BE PERFORMED BY LICENSED CONCRETE TESTING FIRM, TO DETERMINE ACTUAL CONCRETE COMPRESSIVE STRENGTH OF EXISTING CONCRETE BALCONY SLABS.
5. SEE TABLES ON SHEETS 13 THRU 16 FOR MINIMUM CONCRETE COMPRESSIVE STRENGTH (F'c) REQUIREMENTS FOR INFINITY GRS INSTALLED FOR BALCONY GUARDRAIL/RAILING WITHIN DESIGNATED WIND DESIGN PRESSURE LIMITS.

CLEANING AND PROTECTION:

1. ON DELIVERY ALL PRODUCT(S) WILL HAVE A PROTECTIVE COVERING OVER THE TOP HANDRAIL CAP ONLY. IMMEDIATELY UPON COMPLETION OF INSTALLATION OF RAILING FRAME, INSTALLER SHALL REMOVE PROTECTIVE COVER.
2. AFTER INSTALLATION GENERAL CONTRACTOR OR OWNER SHALL BE RESPONSIBLE FOR PROTECTING PRODUCT(S) DURING BALANCE OF CONSTRUCTION.
3. PAINTED ALUMINUM SURFACES SHALL BE CLEANED WITH PLAIN WATER CONTAINING A MILD SOAP OR DETERGENT. NO ABRASIVE AGENTS OR HARSH CHEMICALS ARE TO BE USED. (NOTE: ALL FACTORY COATED MATERIALS REQUIRE PERIODIC MAINTENANCE ESPECIALLY THOSE SUBJECT TO OCEAN SALT AIR OR HARMFUL CHEMICAL ENVIRONMENTS (WITHIN 1 MILE), WHICH REQUIRE WASHING A MINIMUM OF ONCE EVERY (3) MONTHS. APPLICATION OF AN APPROVED UV PROTECTANT AFTER WASHING IS RECOMMENDED-REFER TO AAMA 609 & 610; CLEANING AND MAINTENANCE GUIDE FOR ARCHITECTURALLY FINISHED ALUMINUM.

APPLICABLE GOVERNING BUILDING CODES: 1 2

1. THE INFINITY GUARDRAIL/RAILING COMPONENTS SPECIFIED AND SHOWN IN THIS PRODUCT APPROVAL DOCUMENT ARE SHOP FABRICATED AND ASSEMBLED TO WITHSTAND LOADS REQUIRED BY THE 8TH EDITION 2023 FLORIDA BUILDING CODE-BUILDING, AS THEY PERTAIN TO VARIOUS RAILING AND GUARDRAIL LIVE LOAD CONDITIONS CONSISTENT WITH SECTION 1607.8.1, WITH APPLICABLE SAFETY FACTOR PRESCRIBED BY SECTION 2407.1.1.
2. CONSISTENT WITH THE 8TH EDITION 2023 FLORIDA BUILDING CODE-BUILDING, SECTION 1618.4.6.3, HVHZ SPECIAL LOAD CONSIDERATIONS, THE INFINITY (POSTLESS) GLASS RAILING SYSTEM CAPACITY HAS BEEN TESTED AT TWO TIMES (2x) THE DESIGNATED MAXIMUM DESIGN WIND PRESSURE (AS REQUIRED BY MIAMI-DADE BCCO CHECKLIST #0460) BY PRODUCT TESTING PERFORMED BY BLACKWATER TESTING, INC. (TEST REPORT No. BT-AE-17-001B, AND TEST REPORT No. BT-AE-17-001C), IN CONFORMANCE WITH TEST APPLICATION STANDARD TAS 202, ALONG WITH GLAZING DYNAMIC IMPACT TESTS CONFORMING TO ANSI Z97.1, TEST CATEGORY CLASS A STANDARDS, CONSISTENT WITH 2023 FBC-B SECTION 2406.4.4, AND SECTION 2407.1.

PRODUCT REVISED
as complying with the Florida
Building Code
Acceptance No 24-1203.05
Expiration Date 04/26/2028
By
Miami Dade Product Control

TIMOTHY CHARLES BOUDAH
LICENSED
ENGINEER
No. 63179
STATE OF
FLORIDA
PROFESSIONAL ENGINEER

Timothy C. Boudah, P.E.
State of Florida Registration No. 63179
514 S.W. PORT ST. LUCIE BLVD., PORT ST. LUCIE, FL 34953
PHONE: (772)398-0342 TCBPENG@Outlook.com

Revisions

No.	Date	By	Description
1	4/25/2020	T.B.	UPDATE CODE REFERENCES TO 2020 FBC-B
2	10/31/2024	T.B.	UPDATE CODE REFERENCES TO 2023 FBC-B

PREMIER MANUFACTURER OF RAILINGS & ARCHITECTURAL METAL PRODUCTS

POMA ARCHITECTURAL METALS
www.pomametals.com
2949 S.W. POMA DR. PALM CITY, FL 34990
OFFICE: 772.283.9099 FAX: 772.283.7340

poma

INFINITY
Postless Glass Railing® System
TESTED IN ACCORDANCE WITH MIAMI-DADE COUNTY PRODUCT CONTROL REQUIREMENTS

PRODUCT DESCRIPTION: INFINITY POSTLESS GRS
FABRICATOR: POMA ARCHITECTURAL METALS
ADDRESS: 2049 SW POMA DR. PALM CITY, FL
ENGINEER: TIMOTHY C. BOUDAH, P.E.
Sheet Size: 11X17

Product No.: IGRS 58-1
Drawn By: JP/TCB
Checked By: FP
Scale: NO SCALE
Date: FEB, 2018
Sheet No.: 1 of 16

U.S. Patent No. 8,820,721

INFINITY

Postless Glass Railing System

DRY GLAZED-T BOLT SYSTEM

MAXIMUM ALLOWABLE WIND DESIGN PRESSURE:
DRY GLAZED = +115 PSF & -115 PSF

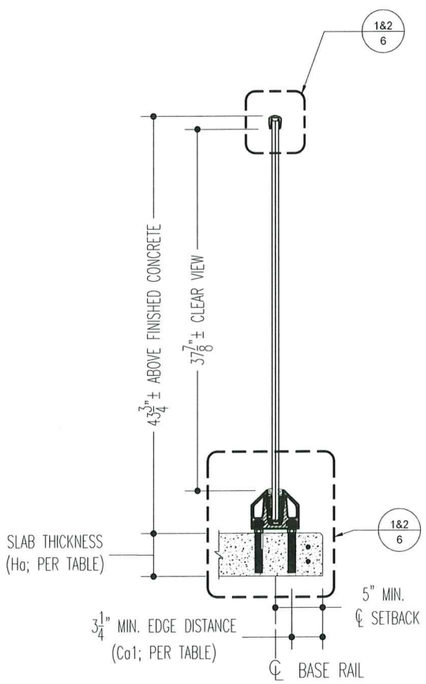

A RAILING PROFILE
NTS

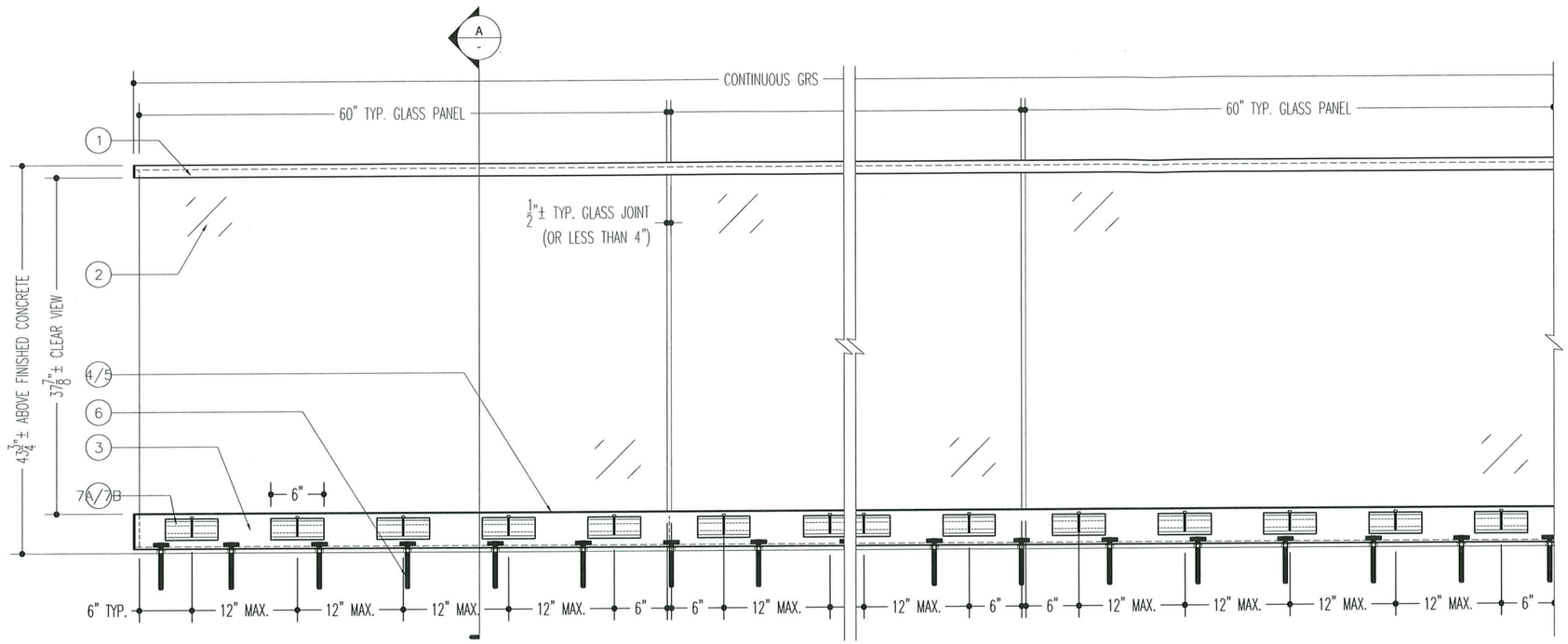

1 INFINITY GUARDRAIL ELEVATION
NTS

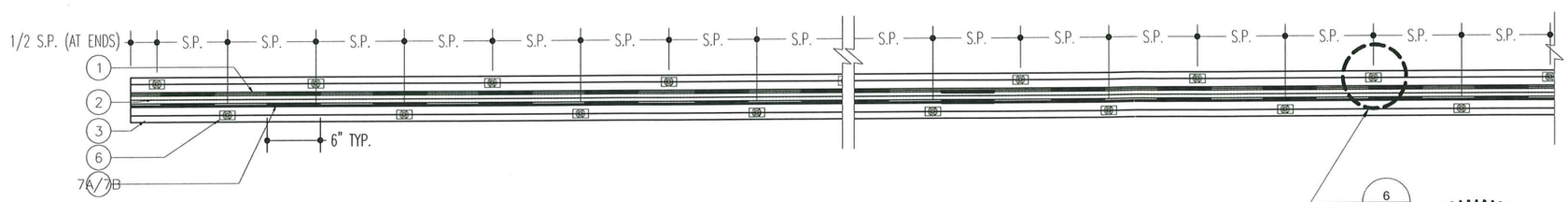

2 INFINITY GUARDRAIL PLAN VIEW
NTS

INFINITY GLASS RAILING COMPONENTS TABLE				
ITEM	PART#	COMPONENT DESCRIPTION	MATERIAL	ALLOY
1A-1C	GI-X	TOP RAIL-SEE OPTIONS	ALUMINUM	6005-T5
1D	GI-PC	TOP RAIL POSITIONING CHANNEL	VINYL	90 D
2	-	5/8" NOMINAL, LAMINATED F.T. GLASS	-	-
3	GI-85	BOTTOM BASE RAIL	ALUMINUM	6005-T5
4	121115A	T.P.E. WEDGE GASKET (INT)	T.P.V./EPDM	65 A
5	P598	T.P.E. PRE-SET GASKET (EXT)	T.P.V./EPDM	65 A
6	-	T-BOLT ANCHOR ASSEMBLY	S.S.	304
6A	-	ANCHOR PIN ASSEMBLY	S.S.	304
7A	TW2	ALUM. COMPRESSION TAPER-WEDGE	ALUMINUM	6005-T5
7B	TWSB58	"L" SETTING/POSITIONING BLOCK	NYLON	90 D
7C	GG735	SikaGlaze GG735	POLYURETHANE	80 D

PRODUCT REVISED
as complying with the Florida
Building Code
Acceptance No 24-1203.05
Expiration Date 04/26/2028
By
Miami Dade Product Control

NOTES:
1. Ca1 = EDGE DISTANCE (SEE TABLES ON SHEETS 13 THRU 16 FOR MINIMUM REQUIREMENTS).
2. (#) = INFINITY GLASS RAILING COMPONENTS (SEE COMPONENT TABLES FOR COMPONENT DESCRIPTIONS).
3. S.P. = T-BOLT ANCHOR & ANCHOR PIN SPACING (SEE TABLES ON SHEETS 13 THRU 16).

TIMOTHY CHARLES BOUDAH
LICENSED PROFESSIONAL ENGINEER
ENGINEER
No. 63179
STATE OF FLORIDA
10-31-24
Timothy C. Boudah, P.E.
State of Florida License No. 63179
514 S.W. PORT ST. LUCIE BLVD., PORT ST. LUCIE, FL. 34953
PHONE: (772)398-0342 FAX: (772)398-0342

Revisions

No.	Date	By	Description

PREMIER MANUFACTURER OF RAILINGS & ARCHITECTURAL METAL PRODUCTS

POMA ARCHITECTURAL METALS
www.pomametals.com
2049 S.W. POMA DR. PALM CITY, FL. 34990
OFFICE: 772.283.0899 FAX: 772.283.7340

INFINITY
Postless Glass Railing® System
TESTED IN ACCORDANCE WITH MIAMI-DADE COUNTY PRODUCT CONTROL REQUIREMENTS

PRODUCT DESCRIPTION: INFINITY POSTLESS GRS
FABRICATOR: POMA ARCHITECTURAL METALS
ADDRESS: 2049 SW POMA DR. PALM CITY, FL
ENGINEER: TIMOTHY C. BOUDAH, P.E.
Sheet Size: 11X17

Product No.: IGRS 58-1
Drawn By: JP/TCB
Checked By: FP
Scale: NO SCALE
Date: FEB, 2018
Sheet No.: 2 of 16

U.S. Patent No. 8,820,721

INFINITY

Postless Glass Railing System

DRY GLAZED-ANCHOR PIN SYSTEM

MAXIMUM ALLOWABLE WIND DESIGN PRESSURE:
DRY GLAZED = +115 PSF & -115 PSF

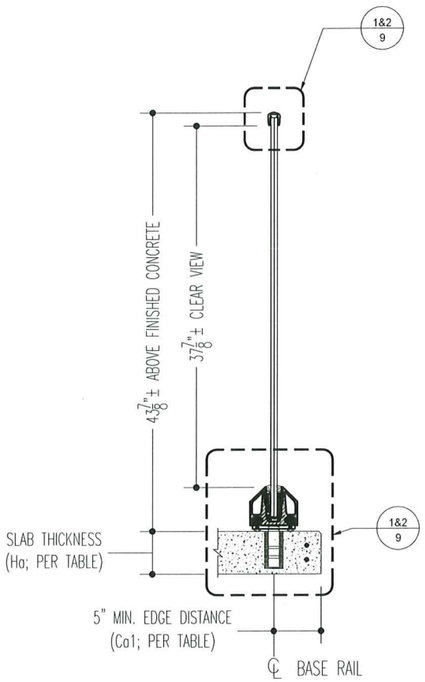

A RAILING PROFILE
NTS

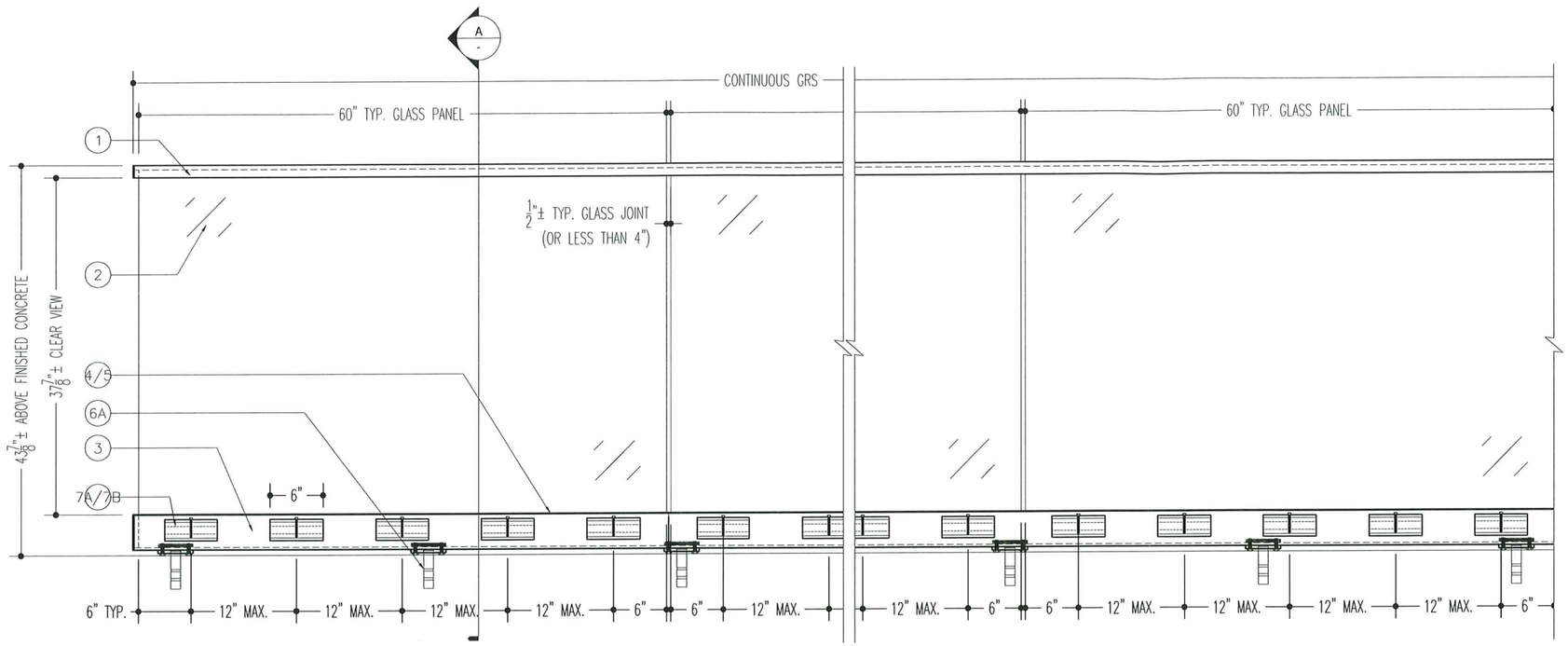

1 INFINITY GUARDRAIL ELEVATION
NTS

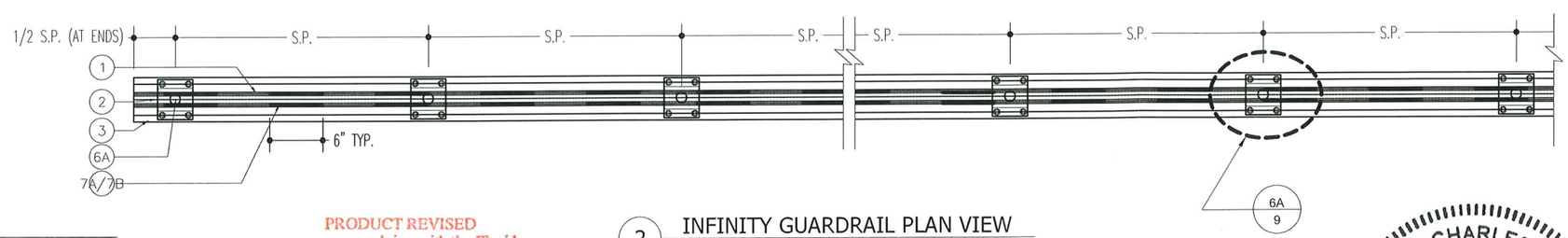

2 INFINITY GUARDRAIL PLAN VIEW
NTS

INFINITY GLASS RAILING COMPONENTS TABLE				
ITEM	PART#	COMPONENT DESCRIPTION	MATERIAL	ALLOY
1A-1C	GI-X	TOP RAIL-SEE OPTIONS	ALUMINUM	6005-T5
1D	GI-PC	TOP RAIL POSITIONING CHANNEL	VINYL	90 D
2	-	5/8" NOMINAL, LAMINATED F.T. GLASS	-	-
3	GI-85	BOTTOM BASE RAIL	ALUMINUM	6005-T5
4	121115A	T.P.E. WEDGE GASKET (INT)	T.P.V./EPDM	65 A
5	P598	T.P.E. PRE-SET GASKET (EXT)	T.P.V./EPDM	65 A
6	-	T-BOLT ANCHOR ASSEMBLY	S.S.	304
6A	-	ANCHOR PIN ASSEMBLY	S.S.	304
7A	TW2	ALUM. COMPRESSION TAPER-WEDGE	ALUMINUM	6005-T5
7B	TWSB58	"L" SETTING/POSITIONING BLOCK	NYLON	90 D
7C	GG735	SikaGlaze GG735	POLYURETHANE	80 D

PRODUCT REVISED
as complying with the Florida
Building Code
Acceptance No 24-1203.05
Expiration Date 04/26/2028
By
Miami Dade Product Control

NOTES:
1. Ca1 = EDGE DISTANCE (SEE TABLES ON SHEETS 13 THRU 16 FOR MINIMUM REQUIREMENTS).
2. (#) = INFINITY GLASS RAILING COMPONENTS (SEE COMPONENT TABLES FOR COMPONENT DESCRIPTIONS).
3. S.P. = T-BOLT ANCHOR & ANCHOR PIN SPACING (SEE TABLES ON SHEETS 13 THRU 16).

TIMOTHY CHARLES BOUDAH
LICENSED ENGINEER
No. 63179
STATE OF FLORIDA
PROFESSIONAL ENGINEER
Date: 10-3-2024
Timothy C. Boudah, P.E.
State of Florida License No. 63179
514 S.W. PORT ST. LUCIE BLVD., PORT ST. LUCIE, FL. 34953
PHONE: (772)398-0342 FAX: (772)398-0342

Revisions

No.	Date	By	Description

PREMIER MANUFACTURER OF RAILINGS & ARCHITECTURAL METAL PRODUCTS

POMA ARCHITECTURAL METALS
www.pomametals.com
2049 S.W. POMA DR. PALM CITY, FL 34990
OFFICE: 772.283.0099 FAX: 772.283.7540

INFINITY
Postless Glass Railing® System
TESTED IN ACCORDANCE WITH MIAMI-DADE COUNTY PRODUCT CONTROL REQUIREMENTS

PRODUCT DESCRIPTION: INFINITY POSTLESS GRS
FABRICATOR: POMA ARCHITECTURAL METALS
ADDRESS: 2049 SW POMA DR. PALM CITY, FL
ENGINEER: TIMOTHY C. BOUDAH, P.E.
Sheet Size: 11X17

Product No.: IGRS 58-1
Drawn By: JP/TCB
Checked By: FP
Scale: NO SCALE
Date: FEB, 2018
Sheet No.: 3 of 16

U.S. Patent No. 8,820,721

INFINITY

Postless Glass Railing System

WET GLAZED-T BOLT SYSTEM

MAXIMUM ALLOWABLE WIND DESIGN PRESSURE:

WET GLAZED= +120 PSF & -120 PSF

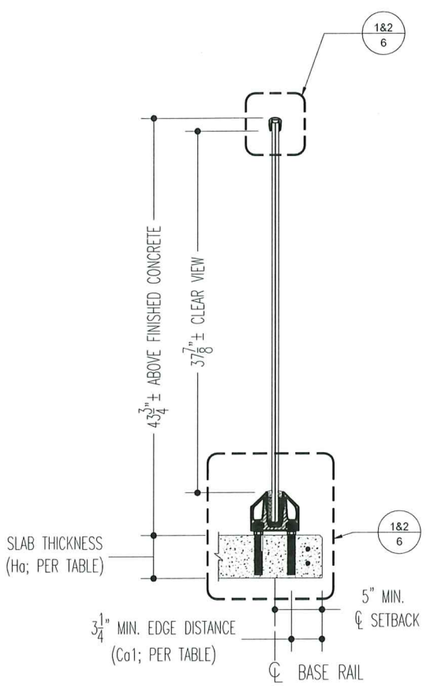

A RAILING PROFILE

NTS

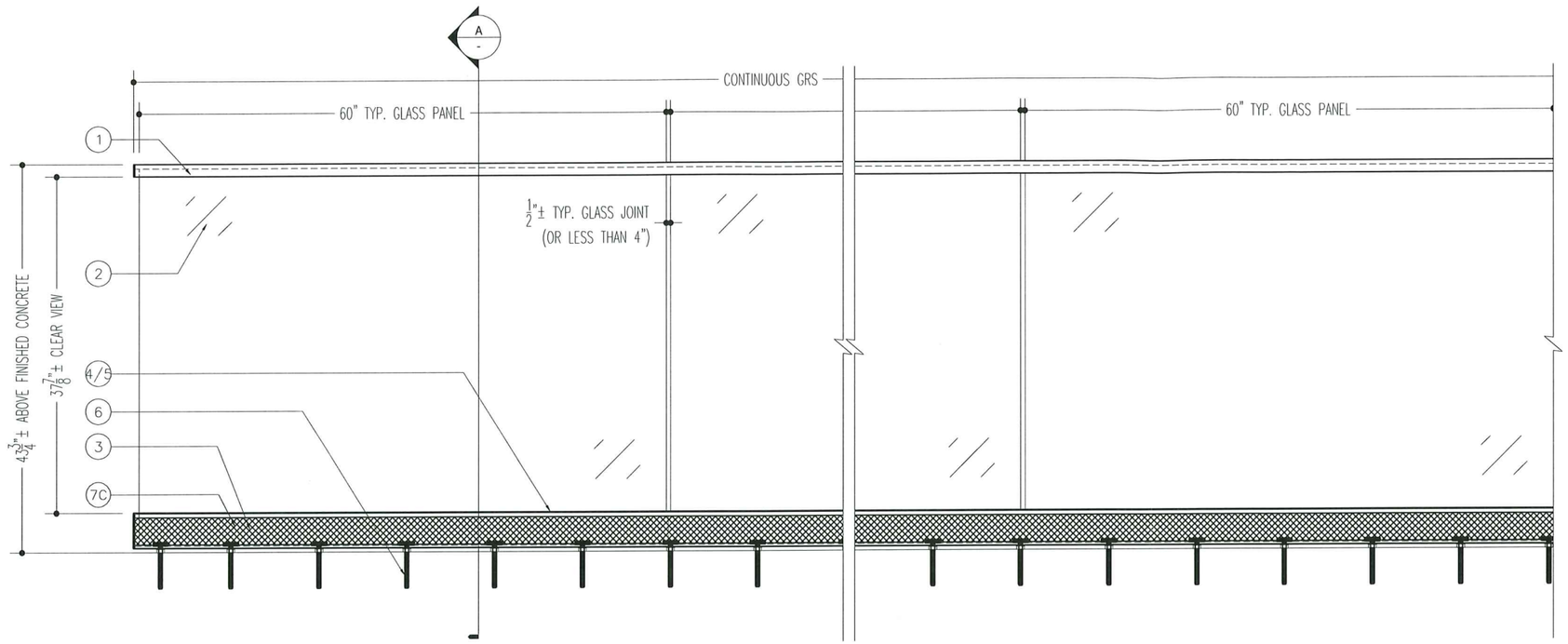

1 INFINITY GUARDRAIL ELEVATION

NTS

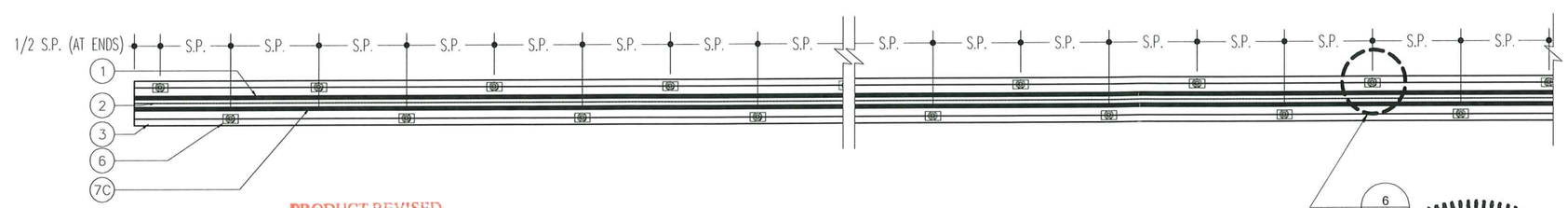

2 INFINITY GUARDRAIL PLAN VIEW

NTS

PRODUCT REVISED
as complying with the Florida
Building Code
Acceptance No. 24-1203.05
Expiration Date 04/26/2028
By
Miami Dade Product Control

INFINITY GLASS RAILING COMPONENTS TABLE				
ITEM	PART#	COMPONENT DESCRIPTION	MATERIAL	ALLOY
1A-1C	GI-X	TOP RAIL-SEE OPTIONS	ALUMINUM	6005-T5
1D	GI-PC	TOP RAIL POSITIONING CHANNEL	VINYL	90 D
2	-	5/8" NOMINAL, LAMINATED F.T. GLASS	-	-
3	GI-85	BOTTOM BASE RAIL	ALUMINUM	6005-T5
4	121115A	T.P.E. WEDGE GASKET (INT)	T.P.V./EPDM	65 A
5	P598	T.P.E. PRE-SET GASKET (EXT)	T.P.V./EPDM	65 A
6	-	T-BOLT ANCHOR ASSEMBLY	S.S.	304
6A	-	ANCHOR PIN ASSEMBLY	S.S.	304
7A	TW2	ALUM. COMPRESSION TAPER-WEDGE	ALUMINUM	6005-T5
7B	TWSB58	"L" SETTING/POSITIONING BLOCK	NYLON	90 D
7C	GG735	SikaGlaze GG735	POLYURETHANE	80 D

NOTES:
1. Ca1 = EDGE DISTANCE (SEE TABLES ON SHEETS 13 THRU 16 FOR MINIMUM REQUIREMENTS).
2. (#) = INFINITY GLASS RAILING COMPONENTS (SEE COMPONENT TABLES FOR COMPONENT DESCRIPTIONS).
3. S.P. = T-BOLT ANCHOR & ANCHOR PIN SPACING (SEE TABLES ON SHEETS 13 THRU 16).

TIMOTHY CHARLES BOUDAH
LICENSED ENGINEER
No. 63179
STATE OF FLORIDA
PROFESSIONAL ENGINEER

Timothy C. Boudah, P.E.
State of Florida Registration No. 63179
514 S.W. PORT ST. LUCIE BLVD., PORT ST. LUCIE, FL. 34953
PHONE: (772)398-0342 FAX: (772)398-0342

Revisions			
No.	Date	By	Description

PREMIER MANUFACTURER OF RAILINGS & ARCHITECTURAL METAL PRODUCTS

POMA ARCHITECTURAL METALS
www.pomametals.com
2049 S.W. POMA DR., PALM CITY, FL. 34990
OFFICE: 772.283.0099 FAX: 772.283.7540

INFINITY
Postless Glass Railing® System
TESTED IN ACCORDANCE WITH MIAMI-DADE COUNTY PRODUCT CONTROL REQUIREMENTS

PRODUCT DESCRIPTION: INFINITY POSTLESS GRS
FABRICATOR: POMA ARCHITECTURAL METALS
ADDRESS: 2049 SW POMA DR. PALM CITY, FL
ENGINEER: TIMOTHY C. BOUDAH, P.E.
Sheet Size: 11X17

Product No.: IGRS 58-1
Drawn By: JP/TCB
Checked By: FP
Scale: NO SCALE
Date: FEB, 2018
Sheet No.: 4 of 16

U.S. Patent No. 8,820,721

INFINITY

Postless Glass Railing System

WET GLAZED-ANCHOR PIN SYSTEM

MAXIMUM ALLOWABLE WIND DESIGN PRESSURE:

WET GLAZED= +120 PSF & -120 PSF

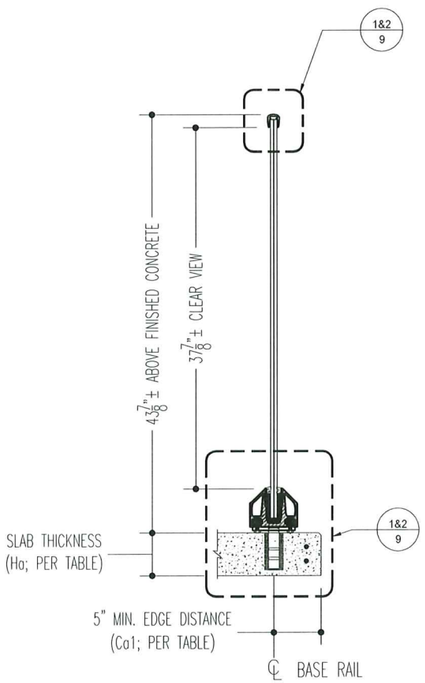

A RAILING PROFILE

NTS

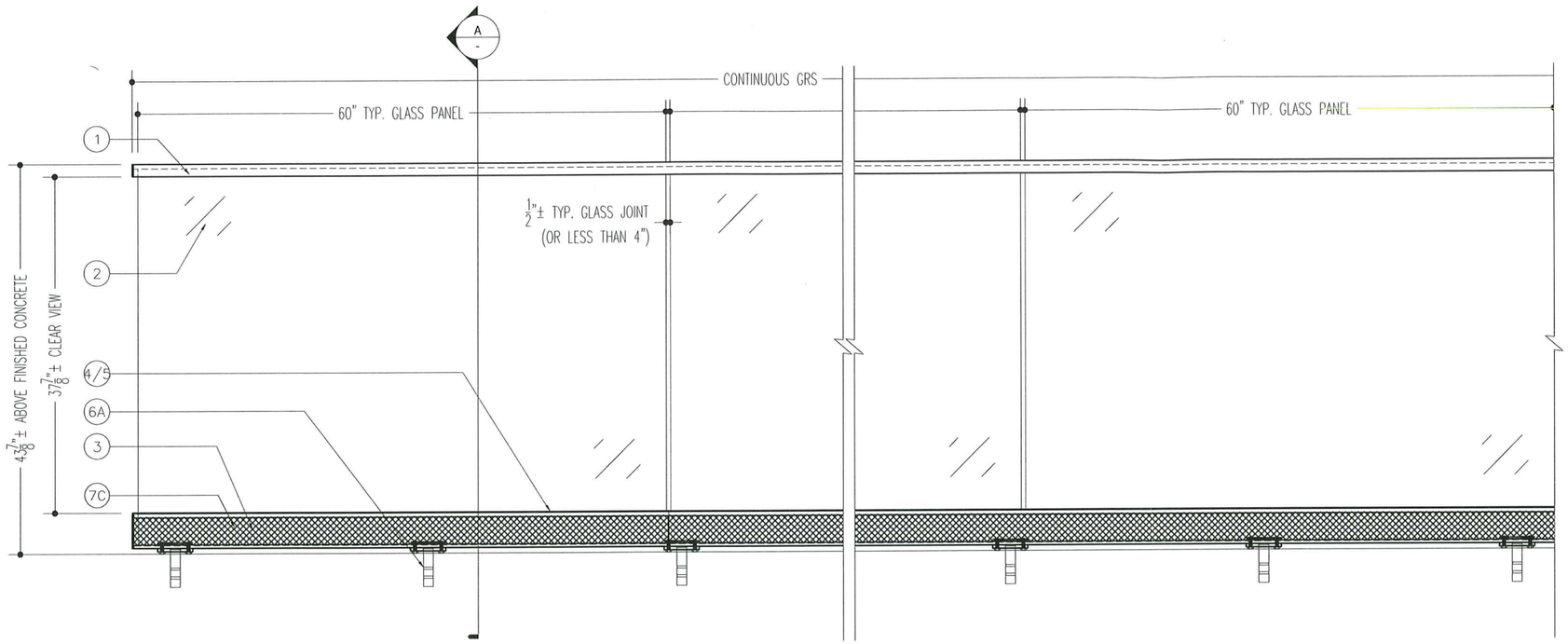

1 INFINITY GUARDRAIL ELEVATION

NTS

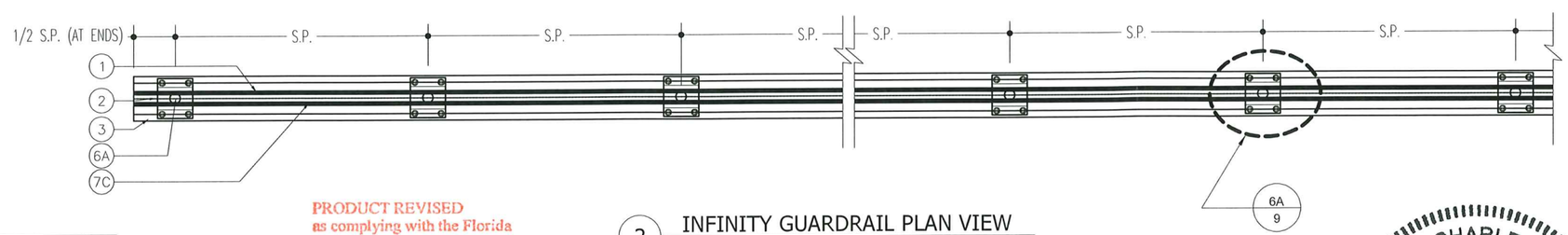

2 INFINITY GUARDRAIL PLAN VIEW

NTS

PRODUCT REVISED
as complying with the Florida
Building Code
Acceptance No. 24-1203.05
Expiration Date 04/26/2028
By
Miami Dade Product Control

INFINITY GLASS RAILING COMPONENTS TABLE				
ITEM	PART#	COMPONENT DESCRIPTION	MATERIAL	ALLOY
1A-1C	GI-X	TOP RAIL-SEE OPTIONS	ALUMINUM	6005-T5
1D	GI-PC	TOP RAIL POSITIONING CHANNEL	VINYL	90 D
2	-	5/8" NOMINAL, LAMINATED F.T. GLASS	-	-
3	GI-85	BOTTOM BASE RAIL	ALUMINUM	6005-T5
4	121115A	T.P.E. WEDGE GASKET (INT)	T.P.V./EPDM	65 A
5	P598	T.P.E. PRE-SET GASKET (EXT)	T.P.V./EPDM	65 A
6	-	T-BOLT ANCHOR ASSEMBLY	S.S.	304
6A	-	ANCHOR PIN ASSEMBLY	S.S.	304
7A	TW2	ALUM. COMPRESSION TAPER-WEDGE	ALUMINUM	6005-T5
7B	TWSB58	"L" SETTING/POSITIONING BLOCK	NYLON	90 D
7C	GG735	SikaGlaze GG735	POLYURETHANE	80 D

NOTES:
1. Ca1 = EDGE DISTANCE (SEE TABLES ON SHEETS 13 THRU 16 FOR MINIMUM REQUIREMENTS).
2. (#) = INFINITY GLASS RAILING COMPONENTS (SEE COMPONENT TABLES FOR COMPONENT DESCRIPTIONS).
3. S.P. = T-BOLT ANCHOR & ANCHOR PIN SPACING (SEE TABLES ON SHEETS 13 THRU 16).

TIMOTHY CHARLES BOUDAH
LICENSE
No. 63179
STATE OF FLORIDA
PROFESSIONAL ENGINEER
Date: 10-31-22

Timothy C. Boudah, P.E.
State of Florida Registration No. 63179
514 S.W. PORT ST. LUCIE BLVD., PORT ST. LUCIE, FL 34953
PHONE: (772)398-0342 FAX: (772)398-0342

Revisions

No.	Date	By	Description

PREMIER MANUFACTURER OF RAILINGS & ARCHITECTURAL METAL PRODUCTS

POMA ARCHITECTURAL METALS
www.pomametals.com
2049 S.W. POMA DR. PALM CITY, FL 34990
OFFICE: 772.283.0099 FAX: 772.283.7540

INFINITY
Postless Glass Railing® System
TESTED IN ACCORDANCE WITH MIAMI-DADE COUNTY PRODUCT CONTROL REQUIREMENTS

PRODUCT DESCRIPTION: INFINITY POSTLESS GRS
FABRICATOR: POMA ARCHITECTURAL METALS
ADDRESS: 2049 SW POMA DR. PALM CITY, FL
ENGINEER: TIMOTHY C. BOUDAH, P.E.
Sheet Size: 11X17

Product No.: IGRS 58-1
Drawn By: JP/TCB
Checked By: FP
Scale: NO SCALE
Date: FEB, 2018
Sheet No.: 5 of 16

U.S. Patent No. 8,820,721

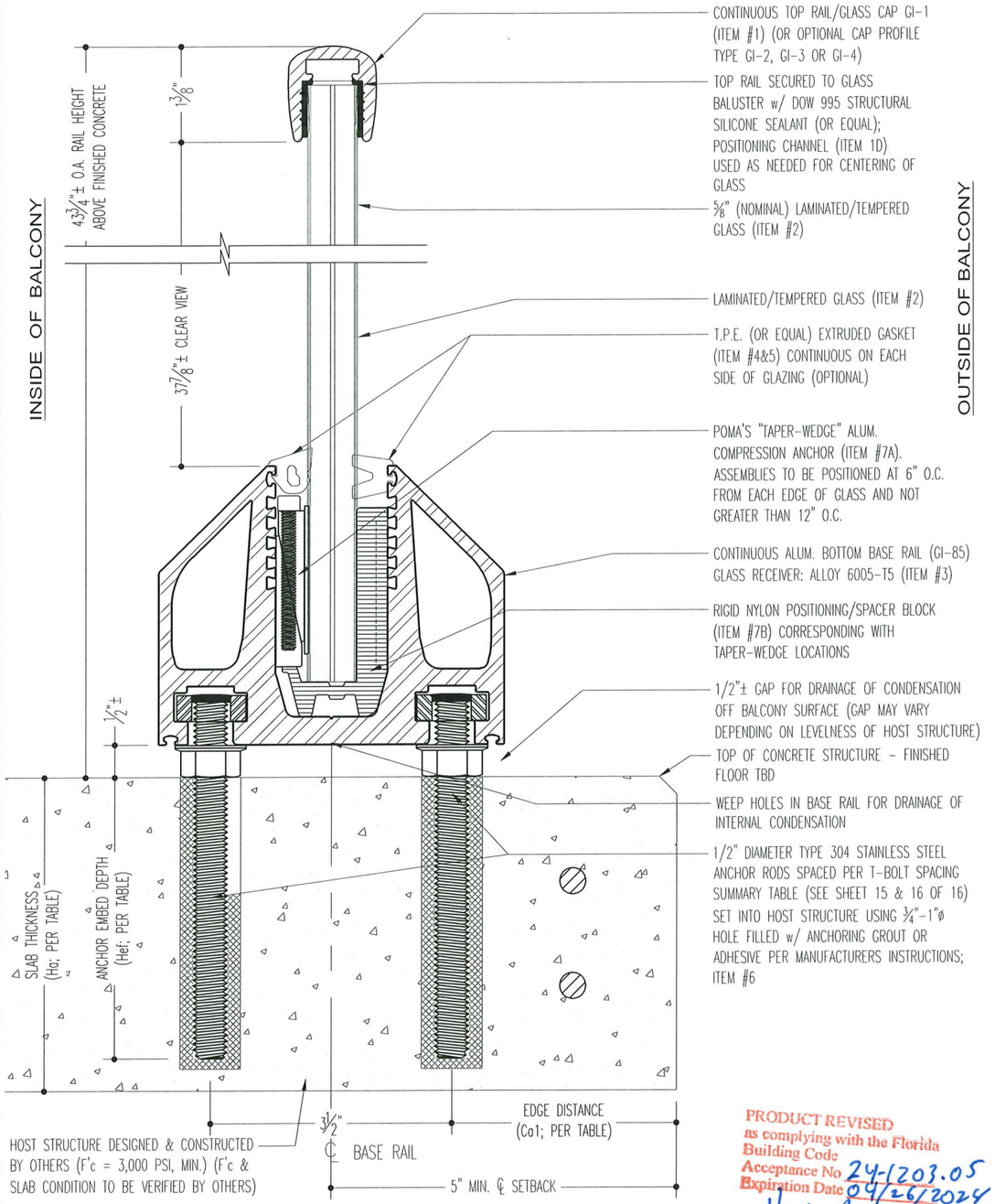

1 ENLARGED INFINITY RAILING SECTION-DRY GLAZED (TAPER WEDGE) NTS

PRODUCT REVISED
as complying with the Florida Building Code
Acceptance No 24-1203.05
Expiration Date 04/26/2024
By
Miami Dade Product Control

MAXIMUM ALLOWABLE WIND DESIGN PRESSURE:
DRY GLAZED = +115 PSF & -115 PSF
WET GLAZED= +120 PSF & -120 PSF

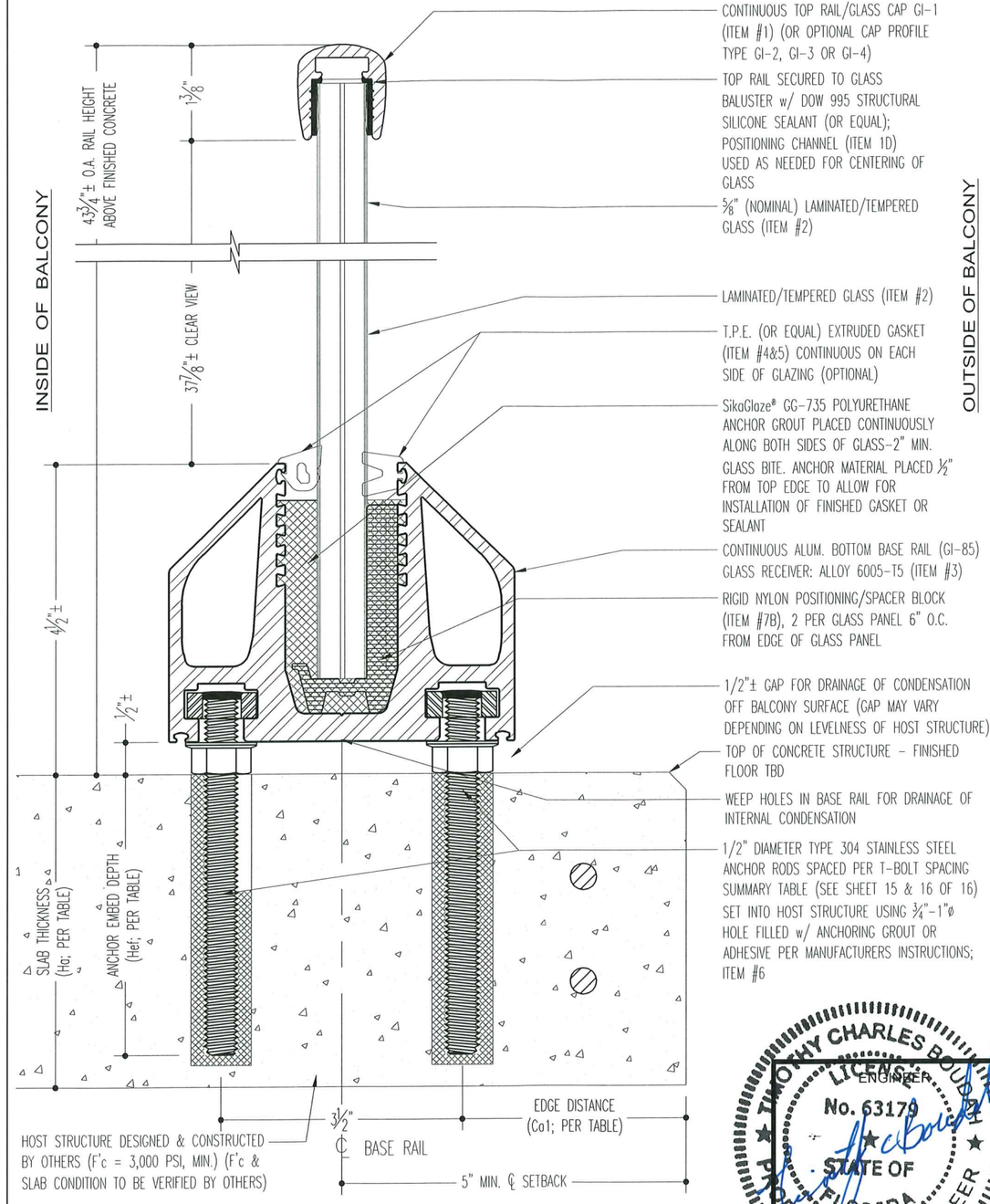

2 ENLARGED INFINITY RAILING SECTION-WET GLAZED NTS

TIMOTHY CHARLES BOUDAH LICENSED PROFESSIONAL ENGINEER No. 63179 STATE OF FLORIDA

10-31-2024

Timothy C. Boudah, P.E.
State of Florida Registration No. 63179
514 S.W. PORT ST. LUCIE BLVD., PORT ST. LUCIE, FL 34953
PHONE: (772)398-0342 FAX: (772)398-0342

Revisions			
No.	Date	By	Description

PREMIER MANUFACTURER OF RAILINGS & ARCHITECTURAL METAL PRODUCTS

POMA ARCHITECTURAL METALS
www.pomametals.com
2049 S.W. POMA DR. PALM CITY, FL 34990
OFFICE: 772.283.0099 FAX: 772.283.7340

INFINITY
Postless Glass Railing® System
TESTED IN ACCORDANCE WITH MIAMI-DADE COUNTY PRODUCT CONTROL REQUIREMENTS

PRODUCT DESCRIPTION: INFINITY POSTLESS GRS
FABRICATOR: POMA ARCHITECTURAL METALS
ADDRESS: 2049 SW POMA DR. PALM CITY, FL
ENGINEER: TIMOTHY C. BOUDAH, P.E.
Sheet Size: 11X17

Product No.: IGRS 58-1
Drawn By: JP/TCB
Checked By: FP
Scale: NO SCALE
Date: FEB, 2018
Sheet No.: 6 of 16

U.S. Patent No. 8,820,721

MAXIMUM ALLOWABLE WIND DESIGN PRESSURE:
DRY GLAZED = +115 PSF & -115 PSF
WET GLAZED= +120 PSF & -120 PSF

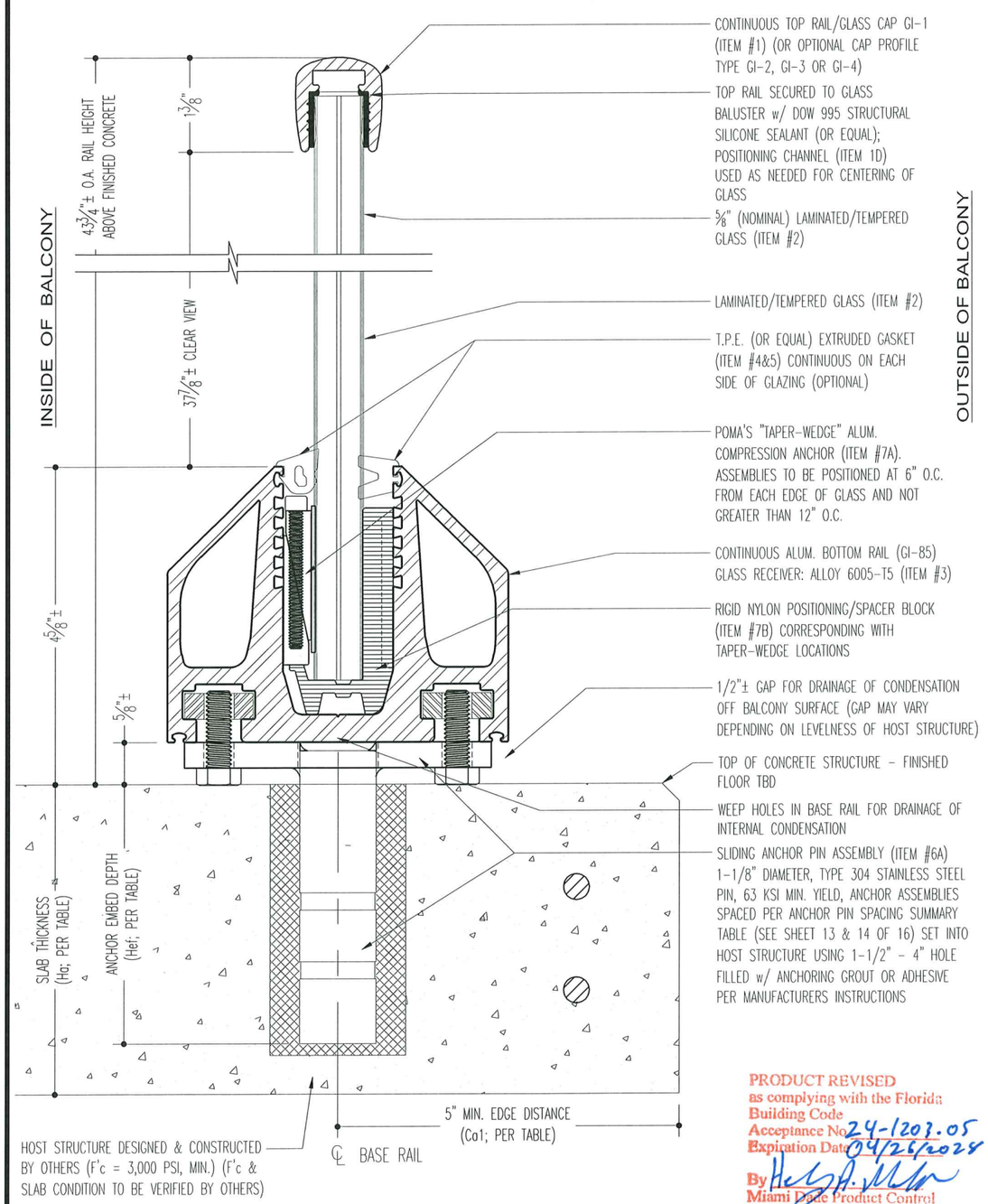

PRODUCT REVISED
as complying with the Florida Building Code
Acceptance No. 24-1203.05
Expiration Date 04/25/2028
By Miami Dade Product Control

1 ENLARGED INFINITY RAILING SECTION-TAPER WEDGE
NTS

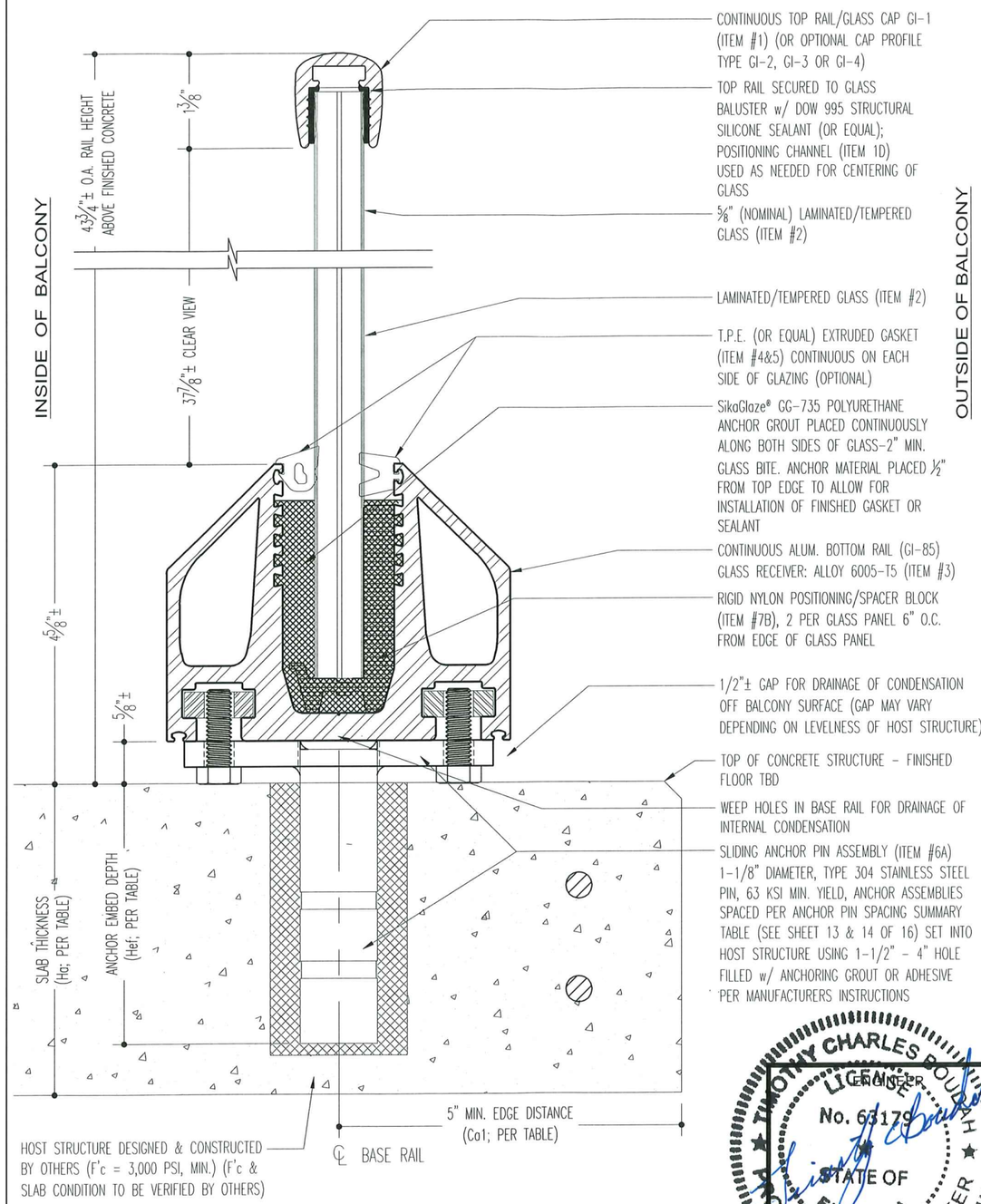

2 ENLARGED INFINITY RAILING SECTION-WET GLAZED
NTS

TIMOTHY CHARLES BOUDAH
LICENSED PROFESSIONAL ENGINEER
No. 63179
STATE OF FLORIDA

Date: 10-31-24
Timothy C. Boudah, P.E.
State of Florida Registration No. 63179
514 S.W. PORT ST. LUCIE BLVD., PORT ST. LUCIE, FL. 34953
PHONE: (772)398-0342 FAX: (772)398-0342

Revisions			
No.	Date	By	Description

PREMIER MANUFACTURER OF RAILINGS & ARCHITECTURAL METAL PRODUCTS

POMA ARCHITECTURAL METALS
www.pomametals.com
2049 S.W. POMA DR. PALM CITY, FL. 34990
OFFICE: 772.283.0099 FAX: 772.283.7340

INFINITY
Postless Glass Railing® System
TESTED IN ACCORDANCE WITH MIAMI-DADE COUNTY PRODUCT CONTROL REQUIREMENTS

PRODUCT DESCRIPTION: INFINITY POSTLESS GRS
FABRICATOR: POMA ARCHITECTURAL METALS
ADDRESS: 2049 SW POMA DR. PALM CITY, FL
ENGINEER: TIMOTHY C. BOUDAH, P.E.
Sheet Size: 11X17

Product No.: IGRS 58-1
Drawn By: JP/TCB
Checked By: FP
Scale: NO SCALE
Date: FEB, 2018
Sheet No.: 7 of 16

MAXIMUM ALLOWABLE WIND DESIGN PRESSURE:
DRY GLAZED = +115 PSF & -115 PSF
WET GLAZED= +120 PSF & -120 PSF

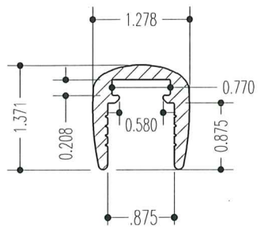

1 ITEM #1 TOP RAIL GI-1

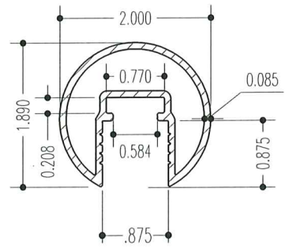

1A ITEM #1A ROUND TOP RAIL GI-2

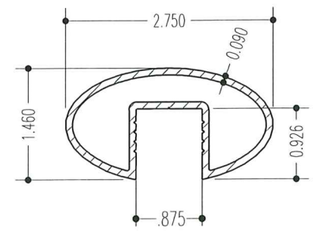

1B ITEM #1B OVAL TOP RAIL GI-3

U.S. Patent No. 8,820,721

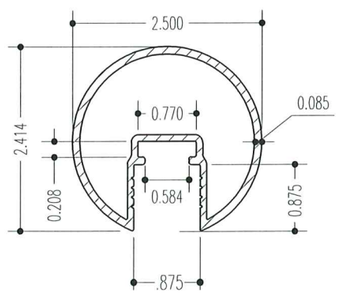

1C ITEM #1C ROUND TOP RAIL GI-4

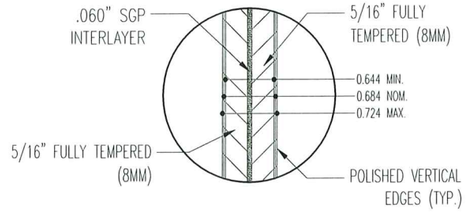

LAMINATED/TEMPERED GLASS PER ASTM C1036 & C1048, QUALITY Q3

2 ITEM #2 GLASS INFILL

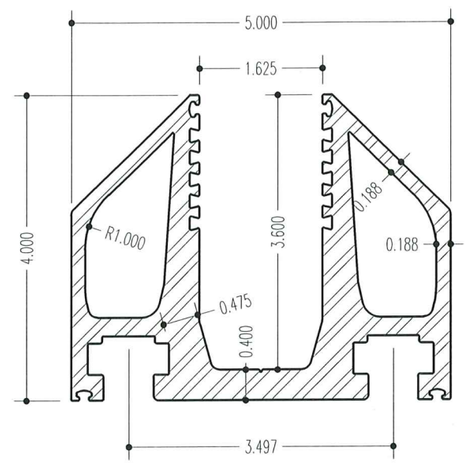

3 ITEM #3 BOTTOM RAIL RECEIVER GI-85

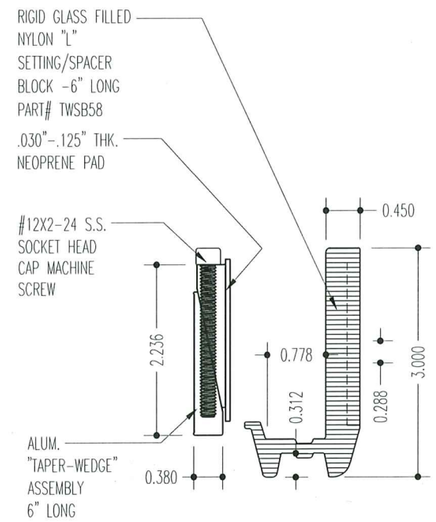

7 ITEM #7A/7B COMPRESSION ASSEMBLY; SHIPPED LOOSE

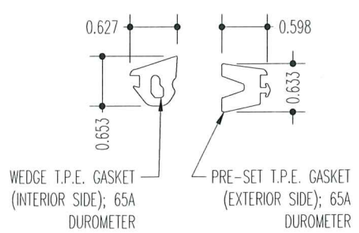

4/5 ITEM #4/5 PRE-SET & WEDGE GASKET SHIPPED LOOSE

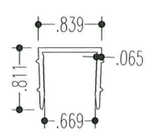

RIGID BLACK VINYL POSITIONING CHANNEL AS NEEDED FOR CENTERING OF GLASS IN TOP RAIL DURING INSTALLATION; 90D DUROMETER
NOTE: NON-INTEGRAL COMPONENT

8 ITEM #1D GLASS POSITIONING CHANNEL

PRODUCT REVISED
as complying with the Florida Building Code
Acceptance No 24-1203.05
Expiration Date 04/26/2028
By Holly A. Walker
Miami Dade Product Control

TIMOTHY CHARLES BOUDAH
LICENSED PROFESSIONAL ENGINEER
No. 63179
STATE OF FLORIDA

Timothy C. Boudah, P.E.
State of Florida Registration No. 63179
514 S.W. PORT ST. LUCIE BOUL., PORT ST. LUCIE, FL. 34953
PHONE: (772)398-0342 FAX: (772)398-0342

Revisions			
No.	Date	By	Description

PREMIER MANUFACTURER OF RAILINGS & ARCHITECTURAL METAL PRODUCTS

POMA ARCHITECTURAL METALS
www.pomametals.com
2049 S.W. POMA DR. PALM CITY, FL. 34990
OFFICE: 772.283.3099 FAX: 772.283.7340

INFINITY
Postless Glass Railing® System
TESTED IN ACCORDANCE WITH MIAMI-DADE COUNTY PRODUCT CONTROL REQUIREMENTS

PRODUCT DESCRIPTION: INFINITY POSTLESS GRS
FABRICATOR: POMA ARCHITECTURAL METALS
ADDRESS: 2049 SW POMA DR. PALM CITY, FL
ENGINEER: TIMOTHY C. BOUDAH, P.E.
Sheet Size: 11X17

Product No.: IGRS 58-1
Drawn By: JP/TCB
Checked By: FP
Scale: NO SCALE
Date: FEB, 2018
Sheet No.: 8 of 16

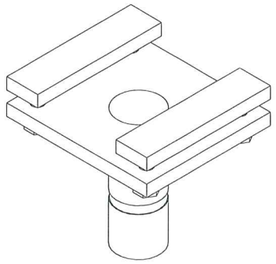

ISOMETRIC VIEW
(FOR REFERENCE ONLY)

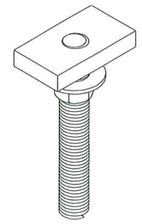

ISOMETRIC VIEW
(FOR REFERENCE ONLY)

MAXIMUM ALLOWABLE WIND DESIGN PRESSURE:
DRY GLAZED = +115 PSF & -115 PSF
WET GLAZED= +120 PSF & -120 PSF

U.S. Patent No. 8,820,721

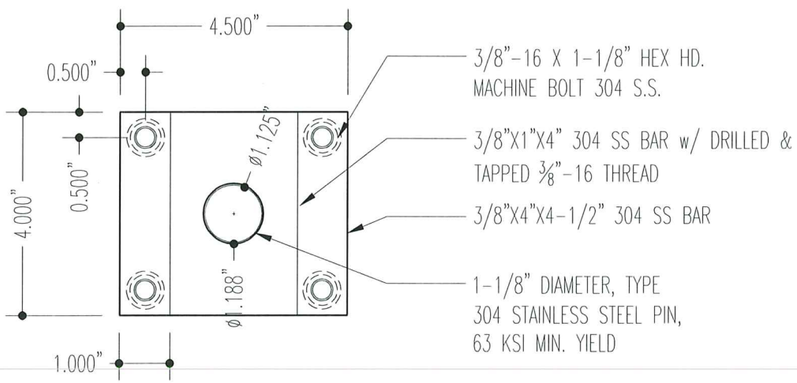

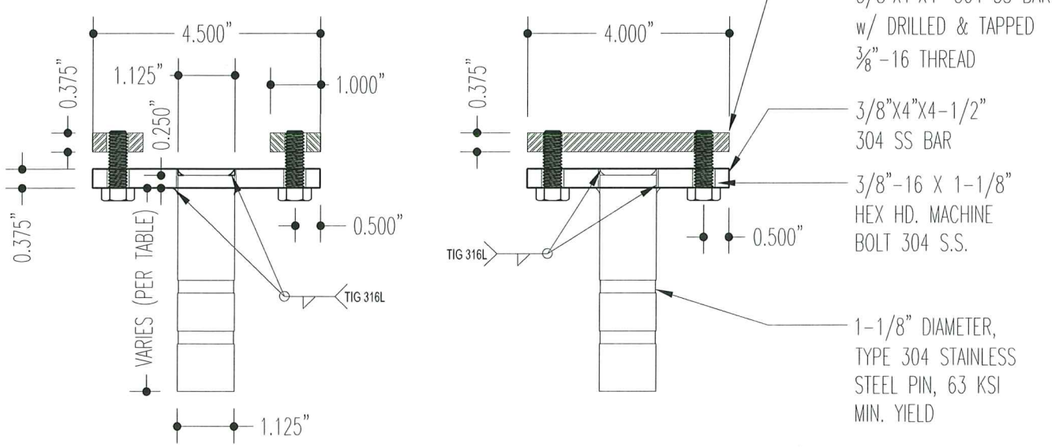

6A ANCHOR PIN ASSEMBLY

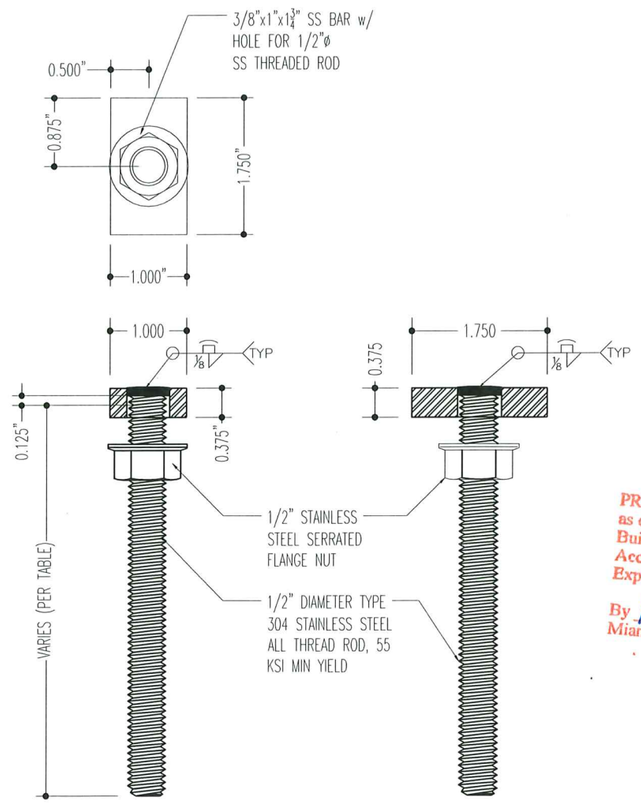

6 T-BOLT ANCHOR ASSEMBLY

PRODUCT REVISED
as complying with the Florida Building Code
Acceptance No. 24-1203.05
Expiration Date 04/26/2028
By Miami Dade Product Control

TIMOTHY CHARLES BOUDAH
LICENSED PROFESSIONAL ENGINEER
No. 63179
STATE OF FLORIDA

Revisions

No.	Date	By	Description

PREMIER MANUFACTURER OF RAILINGS & ARCHITECTURAL METAL PRODUCTS

POMA ARCHITECTURAL METALS
www.pomametals.com
2049 S.W. POMA DR. PALM CITY, FL 34990
OFFICE: 772.283.0099 FAX: 772.283.7440

INFINITY
Postless Glass Railing® System
TESTED IN ACCORDANCE WITH MIAMI-DADE COUNTY PRODUCT CONTROL REQUIREMENTS

PRODUCT DESCRIPTION: INFINITY POSTLESS GRS
FABRICATOR: POMA ARCHITECTURAL METALS
ADDRESS: 2049 SW POMA DR. PALM CITY, FL
ENGINEER: TIMOTHY C. BOUDAH, P.E.
Sheet Size: 11X17

Product No.: IGRS 58-1
Drawn By: JP/TCB
Checked By: FP
Scale: NO SCALE
Date: FEB, 2018
Sheet No.: 9 of 16

Prepared by:
Timothy C. Boudah, P.E.
State of Florida Registration No. 63179
BOUDAH ENGINEERING
514 S.W. PORT ST. LUCIE BLVD., PORT ST. LUCIE, FL 34953
PHONE: (772)398-0342 FAX: (772)398-0342

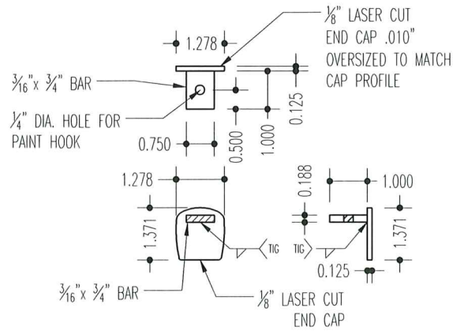

A TOP RAIL END CAP
SHIPPED LOOSE
ALLOY: ALUM. 6063-T6/5052-H32

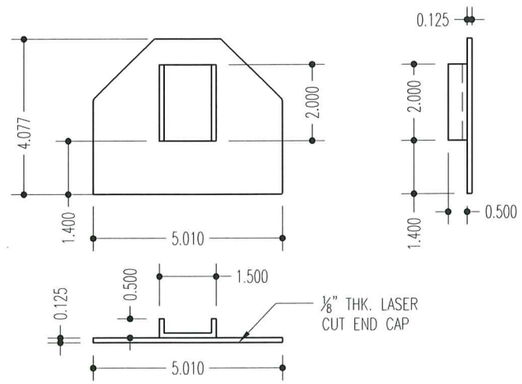

B BOTTOM RAIL END CAP
SHIPPED LOOSE
ALLOY: ALUM. 6063-T6/5052-H32

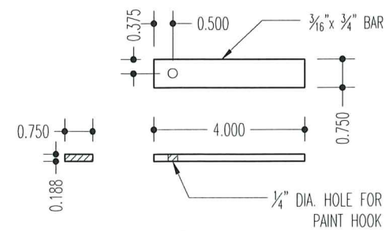

C TOP RAIL SPLICE BAR
SHIPPED LOOSE
ALLOY: ALUM. 6063-T6/6061-T6

MAXIMUM ALLOWABLE WIND DESIGN PRESSURE:
DRY GLAZED = +115 PSF & -115 PSF
WET GLAZED= +120 PSF & -120 PSF

U.S. Patent No. 8,820,721

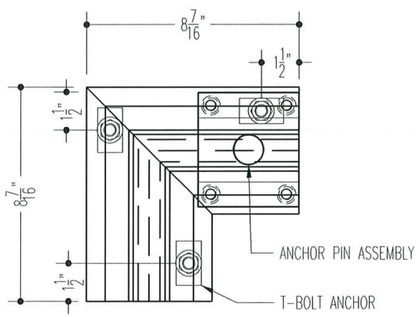

D 90° CORNER ASSEMBLY
SHIPPED LOOSE

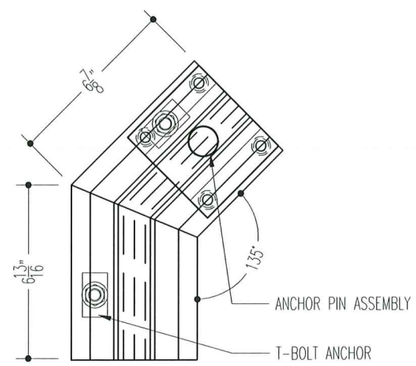

E 45° CORNER ASSEMBLY
SHIPPED LOOSE

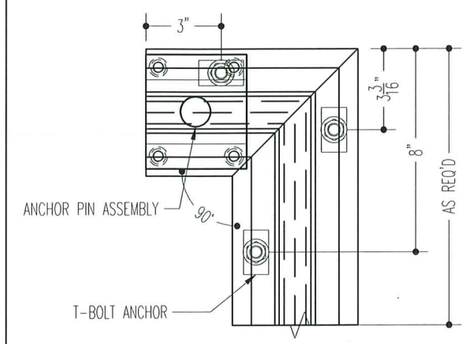

F 90° FULL LENGTH CORNER ASSEMBLY
SHIPPED LOOSE

RESERVED

RESERVED

RESERVED

RESERVED

PRODUCT REVISED
as complying with the Florida Building Code
Acceptance No 24-1203.05
Expiration Date 04/26/2028
By
Miami Dade Product Control

TIMOTHY CHARLES BOUDAH
LICENSE No. 63179
STATE OF FLORIDA
PROFESSIONAL ENGINEER

ENGINEER
Timothy C. Boudah, P.E.
State of Florida Registration No. 63179
514 S.W. PORT ST. LUCIE BLVD., PORT ST. LUCIE, FL. 34953
PHONE: (772)398-0342 FAX: (772)398-0342

Revisions			
No.	Date	By	Description

PREMIER MANUFACTURER OF RAILINGS & ARCHITECTURAL METAL PRODUCTS

POMA ARCHITECTURAL METALS
www.pomametals.com
2049 S.W. POMA DR. • PALM CITY, FL 34990
OFFICE: 772.283.0099 FAX: 772.283.7340

INFINITY
Postless Glass Railing® System
TESTED IN ACCORDANCE WITH MIAMI-DADE COUNTY PRODUCT CONTROL REQUIREMENTS

PRODUCT DESCRIPTION: INFINITY POSTLESS GRS
FABRICATOR: POMA ARCHITECTURAL METALS
ADDRESS: 2049 SW POMA DR. PALM CITY, FL
ENGINEER: TIMOTHY C. BOUDAH, P.E.
Sheet Size: 11X17

Product No.: IGRS 58-1
Drawn By: JP/TCB
Checked By: FP
Scale: NO SCALE
Date: FEB, 2018
Sheet No.: 10 of 16

U.S. Patent No. 8,820,721

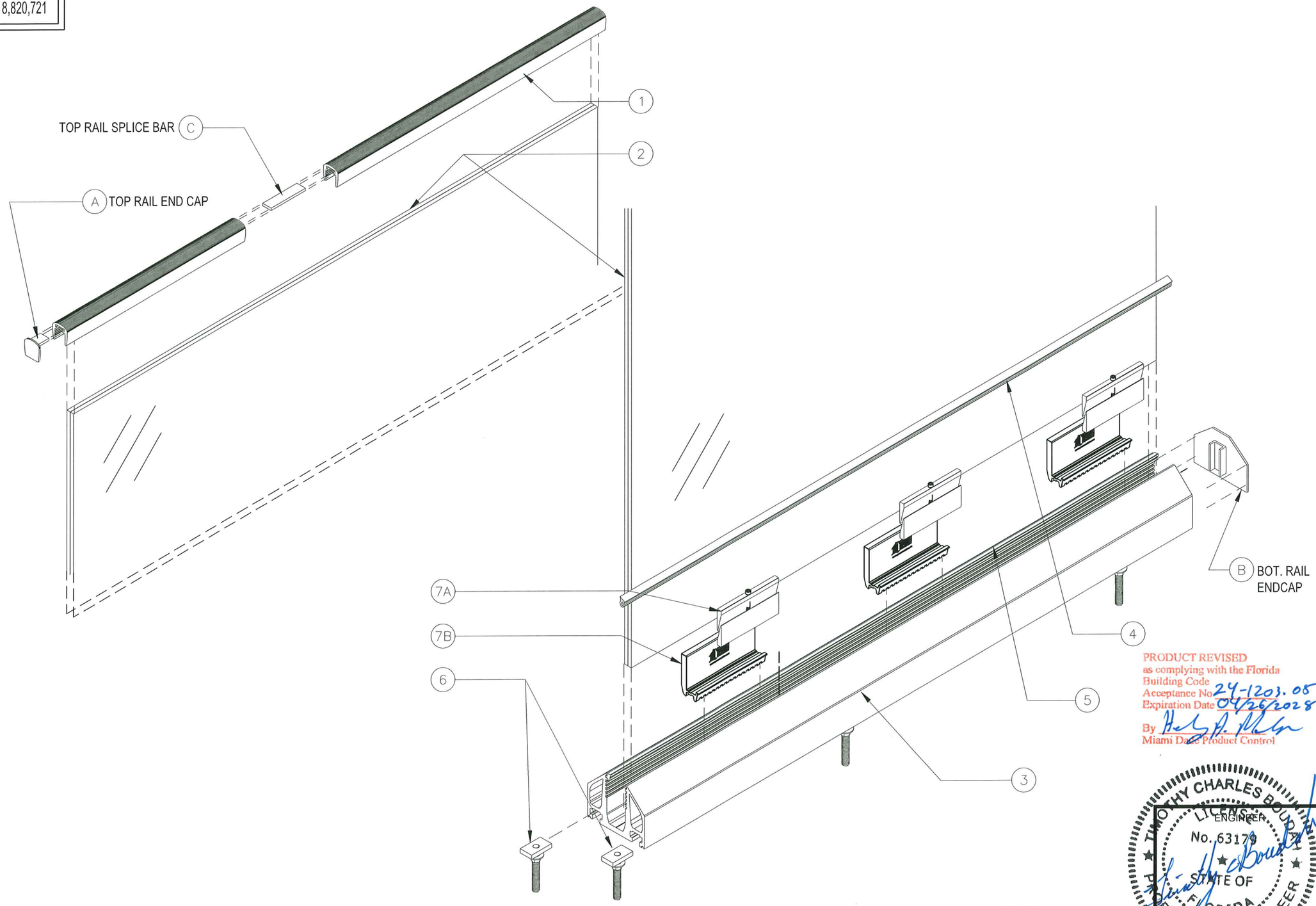

PRODUCT REVISED
as complying with the Florida Building Code
Acceptance No. 24-1203.05
Expiration Date 04/26/2028
By
Miami Dade Product Control

TIMOTHY CHARLES BOUDAH
LICENSED PROFESSIONAL ENGINEER
No. 63179
STATE OF FLORIDA

10-31-2024

Timothy C. Boudah, P.E.
State of Florida Registration No. 63179
514 S.W. PORT ST. LUCIE BLVD., PORT ST. LUCIE, FL. 34953
PHONE: (772)398-0342 FAX: (772)398-0342

EXPLODED VIEW OF COMPONENTS

(DRY GLAZED) NO SCALE

NOTE: WET GLAZED METHOD NOT SHOWN

Revisions

No.	Date	By	Description

PREMIER MANUFACTURER OF RAILINGS & ARCHITECTURAL METAL PRODUCTS

POMA

POMA ARCHITECTURAL METALS
www.pomametals.com
2049 S.W. POMA DR. PALM CITY, FL. 34990
OFFICE: 772.283.0099 FAX: 772.283.7340

INFINITY

Postless Glass Railing® System
TESTED IN ACCORDANCE WITH MIAMI-DADE COUNTY PRODUCT CONTROL REQUIREMENTS

PRODUCT DESCRIPTION: INFINITY POSTLESS GRS
FABRICATOR: POMA ARCHITECTURAL METALS
ADDRESS: 2049 SW POMA DR. PALM CITY, FL
ENGINEER: TIMOTHY C. BOUDAH, P.E.
Sheet Size: 11X17

Product No.: IGRS 58-1
Drawn By: JP/TCB
Checked By: FP
Scale: NO SCALE
Date: FEB, 2018
Sheet No.: 11 of 16

U.S. Patent No. 8,820,721

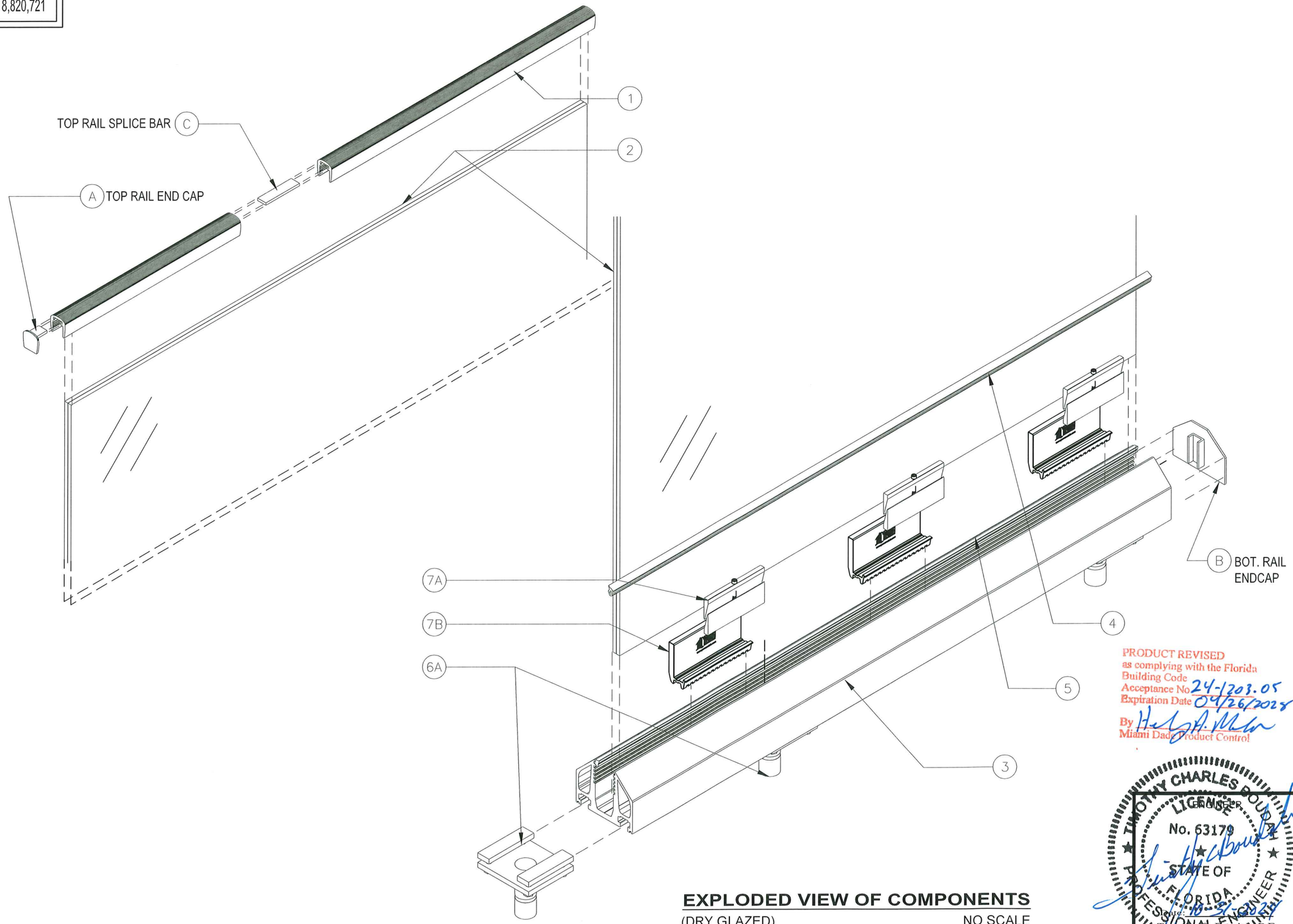

EXPLODED VIEW OF COMPONENTS

(DRY GLAZED) NO SCALE

NOTE: WET GLAZED METHOD NOT SHOWN

PRODUCT REVISED
as complying with the Florida Building Code
Acceptance No. 24-1203.05
Expiration Date 04/26/2028
By Miami Dade Product Control

TIMOTHY CHARLES BOUDAH
LICENSED PROFESSIONAL ENGINEER
No. 63179
STATE OF FLORIDA

Revisions

No.	Date	By	Description

PREMIER MANUFACTURER OF RAILINGS & ARCHITECTURAL METAL PRODUCTS

POMA ARCHITECTURAL METALS
www.pomametals.com
2049 S.W. POMA DR. PALM CITY, FL 34990
OFFICE: 772.283.0059 FAX: 772.283.7540

INFINITY
Postless Glass Railing® System
TESTED IN ACCORDANCE WITH MIAMI-DADE COUNTY PRODUCT CONTROL REQUIREMENTS

PRODUCT DESCRIPTION: INFINITY POSTLESS GRS
FABRICATOR: POMA ARCHITECTURAL METALS
ADDRESS: 2049 SW POMA DR. PALM CITY, FL
ENGINEER: TIMOTHY C. BOUDAH, P.E.
Sheet Size: 11X17

Product No.: IGRS 58-1
Drawn By: JP/TCB
Checked By: FP
Scale: NO SCALE
Date: FEB, 2018
Sheet No.: 12 of 16

Timothy C. Boudah, P.E.
State of Florida Registration No. 63179
514 S.W. PORT ST. LUCIE BLVD., PORT ST. LUCIE, FL 34953
PHONE: (772)398-0342 FAX: (772)398-0342

BOTTOM-BASE RAIL ANCHORAGE SUMMARY CHART

1-1/8" Ø ANCHOR PIN SPACING Vs. CONCRETE SLAB SETTING PARAMETERS

MAXIMUM DESIGN WIND PRESSURE (NEG. OR POS.) (Pw)	MINIMUM ANCHOR PIN EMBEDMENT DEPTH (Hef)	MAXIMUM ANCHOR PIN SPACING (Sp)	MINIMUM CONCRETE SLAB COMPRESSIVE STRENGTH (F'c)	MINIMUM CHARACTERISTIC BOND STRESS (Γuncr)
120 PSF	3.0 INCH	28.75 INCH	≥ 4,725 PSI	2,575 PSI
			5,000	2,545
			5,500	2,495
			6,000	2,460
		30.0 INCH	≥ 5,725 PSI	2,835 PSI
	3.5 INCH	28.75 INCH	≥ 3,350 PSI	2,190 PSI
			3,500	2,170
			4,000	2,100
			4,500	2,050
			5,000	2,010
			5,500	1,975
			6,000	1,950
		30.0 INCH	≥ 4,000 PSI	2,430 PSI
			4,500	2,355
			5,000	2,310
			5,500	2,260
			6,000	2,225
		31.0 INCH	≥ 4,600 PSI	2,590 PSI
			5,000	2,545
			5,500	2,500
			6,000	2,460
	4.0 INCH	28.75 INCH	3,000 PSI	1,815 PSI
			3,500	1,755
			4,000	1,705
			4,500	1,670
			5,000	1,640
			5,500	1,610
			6,000	1,590
		30.0 INCH	3,000 PSI	2,090 PSI
			3,500	2,015
			4,000	1,960
			4,500	1,915
			5,000	1,880
			5,500	1,850
			6,000	1,820
		31.0 INCH	≥ 3,350 PSI	2,260 PSI
			3,500	2,235
			4,000	2,165
			4,500	2,120
			5,000	2,080
			5,500	2,045
			6,000	2,020
	4.5 INCH	28.75 INCH	3,000 PSI	1,500 PSI
			3,500	1,460
			4,000	1,420
			4,500	1,390
			5,000	1,365
			5,500	1,345
			6,000	1,330
		30.0 INCH	3,000 PSI	1,730 PSI
			3,500	1,675
			4,000	1,630
			4,500	1,595
			5,000	1,570
			5,500	1,545
			6,000	1,525
		31.0 INCH	3,000 PSI	1,920 PSI
			3,500	1,860
			4,000	1,810
			4,500	1,770
			5,000	1,735
			5,500	1,710
			6,000	1,685

MAXIMUM DESIGN WIND PRESSURE (NEG. OR POS.) (Pw)	MINIMUM ANCHOR PIN EMBEDMENT DEPTH (Hef)	MAXIMUM ANCHOR PIN SPACING (Sp)	MINIMUM CONCRETE SLAB COMPRESSIVE STRENGTH (F'c)	MINIMUM CHARACTERISTIC BOND STRESS (Γuncr)
115 PSF	3.0 INCH	28.75 INCH	≥ 3,825 PSI	2,325 PSI
			4,000	2,300
			4,500	2,240
			5,000	2,190
			5,500	2,147
			6,000	2,120
		30.0 INCH	≥ 4,700 PSI	2,560 PSI
			5,000	2,530
			5,500	2,480
			6,000	2,435
		31.0 INCH	≥ 5,400 PSI	2,765 PSI
			5,500	2,755
			6,000	2,705
		32.0 INCH	≥ 6,250 PSI	2,955 PSI
	3.5 INCH	28.75 INCH	3,000 PSI	1,925 PSI
			3,500	1,855
			4,000	1,800
			4,500	1,760
			5,000	1,725
			5,500	1,695
			6,000	1,675
		30.0 INCH	≥ 3,300 PSI	2,180 PSI
			3,500	2,150
			4,000	2,085
			4,500	2,035
			5,000	1,995
			5,500	1,960
			6,000	1,930
		31.0 INCH	≥ 3,800 PSI	2,350 PSI
			4,000	2,335
			4,500	2,265
			5,000	2,220
			5,500	2,180
			6,000	2,145
		32.0 INCH	≥ 4,350 PSI	2,520 PSI
			4,500	2,500
			5,000	2,470
			5,500	2,405
			6,000	2,370

MAXIMUM DESIGN WIND PRESSURE (NEG. OR POS.) (Pw)	MINIMUM ANCHOR PIN EMBEDMENT DEPTH (Hef)	MAXIMUM ANCHOR PIN SPACING (Sp)	MINIMUM CONCRETE SLAB COMPRESSIVE STRENGTH (F'c)	MINIMUM CHARACTERISTIC BOND STRESS (Γuncr)
115 PSF	4.0 INCH	28.75 INCH	3,000 PSI	1,550 PSI
			3,500	1,500
			4,000	1,460
			4,500	1,430
			5,000	1,405
			5,500	1,385
			6,000	1,365
		30.0 INCH	3,000 PSI	1,800 PSI
			3,500	1,740
			4,000	1,695
			4,500	1,655
			5,000	1,625
			5,500	1,600
			6,000	1,580
		31.0 INCH	3,000 PSI	2,030 PSI
			3,500	1,940
			4,000	1,885
			4,500	1,845
			5,000	1,810
			5,500	1,780
			6,000	1,755
		32.0 INCH	≥ 3,175 PSI	2,195 PSI
			3,500	2,140
			4,000	2,085
			4,500	2,035
			5,000	1,995
			5,500	1,970
			6,000	1,935
	4.5 INCH	28.75 INCH	3,000 PSI	1,280 PSI
			3,500	1,240
			4,000	1,210
			4,500	1,190
			5,000	1,170
			5,500	1,150
			6,000	1,140
		30.0 INCH	3,000 PSI	1,490 PSI
			3,500	1,445
			4,000	1,405
			4,500	1,380
			5,000	1,355
			5,500	1,335
			6,000	1,320
		31.0 INCH	3,000 PSI	1,665 PSI
			3,500	1,610
			4,000	1,570
			4,500	1,535
			5,000	1,510
			5,500	1,485
			6,000	1,470
		32.0 INCH	3,000 PSI	1,850 PSI
			3,500	1,785
			4,000	1,735
			4,500	1,700
			5,000	1,670
			5,500	1,645
			6,000	1,620

PRODUCT REVISED
as complying with the Florida
Building Code
Acceptance No 24-1203.05
Expiration Date 04/26/2028
By
Miami Dade Product Control

TIMOTHY CHARLES BOUDAH
LICENSE No. 63179
STATE OF FLORIDA
PROFESSIONAL ENGINEER
Date: 10-30-2024
Timothy C. Boudah, P.E.
State of Florida Registration No. 63179
514 S.W. PORT ST. LUCIE BLVD., PORT ST. LUCIE, FL 34953
PHONE: (772)398-0342 FAX: (772)398-0342

Revisions

No.	Date	By	Description

PREMIER MANUFACTURER OF RAILINGS & ARCHITECTURAL METAL PRODUCTS

POMA ARCHITECTURAL METALS
www.pomametals.com
2049 S.W. POMA DR. PALM CITY, FL 34990
OFFICE: 772.283.0099 FAX: 772.283.7549

INFINITY
Postless Glass Railing® System
TESTED IN ACCORDANCE WITH MIAMI-DADE COUNTY PRODUCT CONTROL REQUIREMENTS

PRODUCT DESCRIPTION: INFINITY POSTLESS GRS
FABRICATOR: POMA ARCHITECTURAL METALS
ADDRESS: 2049 SW POMA DR. PALM CITY, FL
ENGINEER: TIMOTHY C. BOUDAH, P.E.
Sheet Size: 11X17

Product No.: IGRS 58-1
Drawn By: JP/TCB
Checked By: FP
Scale: NO SCALE
Date: FEB, 2018
Sheet No.: 13 of 16

BOTTOM-BASE RAIL ANCHORAGE SUMMARY CHART

1-1/8" Ø ANCHOR PIN SPACING Vs. CONCRETE SLAB SETTING PARAMETERS

MAXIMUM DESIGN WIND PRESSURE (NEG. OR POS.) (Pw)	MINIMUM ANCHOR PIN EMBEDMENT DEPTH (Hef)	MAXIMUM ANCHOR PIN SPACING (Sp)	MINIMUM CONCRETE SLAB COMPRESSIVE STRENGTH (F'c)	MINIMUM CHARACTERISTIC BOND STRESS (I'uncr)
≤110.98 PSF SEE CHART NOTE # 9	3.0 INCH	28.75 INCH	≥ 3,475 PSI	2,205 PSI
			3,500	2,200
			4,000	2,140
			4,500	2,080
			5,000	2,035
			5,500	2,000
			6,000	1,970
		30.0 INCH	≥ 4,300 PSI	2,440 PSI
			4,500	2,410
			5,000	2,360
			5,500	2,315
			6,000	2,280
		31.0 INCH	≥ 5,000 PSI	2,625 PSI
			5,500	2,575
			6,000	2,540
		32.0 INCH	≥ 5,725 PSI	2,825 PSI
			6,000	2,800
		33.0 INCH	≥ 6,525 PSI	3,050 PSI
	3.5 INCH	28.75 INCH	3,000 PSI	1,790 PSI
			3,500	1,720
			4,000	1,675
			4,500	1,640
			5,000	1,610
			5,500	1,580
			6,000	1,560
		30.0 INCH	3,000 PSI	2,080 PSI
			3,500	2,000
			4,000	1,950
			4,500	1,900
			5,000	1,865
			5,500	1,830
			6,000	1,805
		31.0 INCH	≥ 3,500 PSI	2,235 PSI
			4,000	2,170
			4,500	2,120
			5,000	2,075
			5,500	2,040
			6,000	2,010
		32.0 INCH	≥ 4,050 PSI	2,400 PSI
			4,500	2,350
			5,000	2,295
			5,500	2,255
			6,000	2,220
		33.0 INCH	≥ 4,750 PSI	2,550 PSI
			5,000	2,520
			5,500	2,475
			6,000	2,435

MAXIMUM DESIGN WIND PRESSURE (NEG. OR POS.) (Pw)	MINIMUM ANCHOR PIN EMBEDMENT DEPTH (Hef)	MAXIMUM ANCHOR PIN SPACING (Sp)	MINIMUM CONCRETE SLAB COMPRESSIVE STRENGTH (F'c)	MINIMUM CHARACTERISTIC BOND STRESS (I'uncr)
≤110.98 PSF SEE CHART NOTE # 9	4.0 INCH	28.75 INCH	3,000 PSI	1,440 PSI
			3,500	1,390
			4,000	1,355
			4,500	1,330
			5,000	1,305
			5,500	1,285
			6,000	1,270
		30.0 INCH	3,000 PSI	1,680 PSI
			3,500	1,620
			4,000	1,580
			4,500	1,550
			5,000	1,520
			5,500	1,495
			6,000	1,475
		31.0 INCH	3,000 PSI	1,880 PSI
			3,500	1,815
			4,000	1,770
			4,500	1,725
			5,000	1,695
			5,500	1,665
			6,000	1,645
		32.0 INCH	3,000 PSI	2,080 PSI
			3,500	2,010
			4,000	1,955
			4,500	1,910
			5,000	1,875
			5,500	1,845
			6,000	1,820
		33.0 INCH	≥ 3,350 PSI	2,240 PSI
			3,500	2,210
			4,000	2,150
			4,500	2,100
			5,000	2,060
			5,500	2,025
			6,000	1,995

MAXIMUM DESIGN WIND PRESSURE (NEG. OR POS.) (Pw)	MINIMUM ANCHOR PIN EMBEDMENT DEPTH (Hef)	MAXIMUM ANCHOR PIN SPACING (Sp)	MINIMUM CONCRETE SLAB COMPRESSIVE STRENGTH (F'c)	MINIMUM CHARACTERISTIC BOND STRESS (I'uncr)
≤110.98 PSF SEE CHART NOTE # 9	4.5 INCH	28.75 INCH	3,000 PSI	1,185 PSI
			3,500	1,150
			4,000	1,125
			4,500	1,105
			5,000	1,085
			5,500	1,075
			6,000	1,075 (MIN)
		30.0 INCH	3,000 PSI	1,400 PSI
			3,500	1,350
			4,000	1,310
			4,500	1,285
			5,000	1,265
			5,500	1,245
			6,000	1,230
		31.0 INCH	3,000 PSI	1,550 PSI
			3,500	1,505
			4,000	1,465
			4,500	1,440
			5,000	1,415
			5,500	1,395
			6,000	1,375
		32.0 INCH	3,000 PSI	1,740 PSI
			3,500	1,670
			4,000	1,630
			4,500	1,595
			5,000	1,565
			5,500	1,540
			6,000	1,530
		33.0 INCH	3,000 PSI	1,900 PSI
			3,500	1,840
			4,000	1,790
			4,500	1,755
			5,000	1,720
			5,500	1,695
			6,000	1,680

INFINITY ANCHOR PIN BOTTOM-BASE RAIL ANCHORAGE SUMMARY CHART NOTES:

1. ALL ANCHOR PIN EMBEDMENT PARAMETERS LISTED (Hef, Sp, F'C, AND I'unc) ARE BASED ON THE FOLLOWING SETTING PARAMETERS:
   A) ANCHOR PIN EDGE DISTANCE (Ca1) = 6" (MIN.)
   B) CONCRETE SLAB THICKNESS (Ha) MUST NOT BE LESS THAN THE 1 1/2" x Hef, AS FOLLOWING, WHERE Ca1 = 6" (MIN.) :

Hef	Ha
3.0 Inch	4.5 Inch
3.5	5.25
4.0	6.0
4.5	

2. ANCHOR PIN SHALL CONSIST OF A.I.S.I. TYPE 304 STAINLESS STEEL (OR EQUAL) WITH ULTIMATE TENSILE STRENGTH =/> 101 KSI, WITH MINIMUM YIELD STRENGTH = 63 KSI.
3. ANCHOR PIN HOLE DIAMETER (Do) IS BASED ON 2 INCH DIAMETER. LARGER HOLE DIAMETER MAY REQUIRE INCREASE IN EDGE DISTANCE (Ca1) AND/OR INCREASE IN DESIGNATED MINIMUM SLAB THICKNESS (Ha).
4. ANCHOR PIN HOLE DEPTH MUST BE DRILLED NO LESS THAN 1/8" DEEPER THAN SPECIFIED ANCHOR PIN EMBEDMENT DEPTH, Hef, AND NO GREATER THAN 1/4" DEEPER THAN DESIGNATED Hef.
5. EXISTING CONCRETE SLAB MUST BE PROVIDED WITH CONTINUOUS EDGE REINFORCING BAR, OR OTHER SUPPLEMENTAL EDGE REINFORCING STEEL.
6. THE ANCHOR PIN EMBEDMENT PARAMETERS, AS LISTED, HAS BEEN DETERMINED IN STRICT CONFORMANCE WITH ACI 318-14, CHAPTER 17, CRITERIA FOR ANCHORING STEEL ELEMENTS INTO EXISTING CONCRETE , WITH AMENDMENTS PRESCRIBED BY AC308-2013, EFFECTIVE AUGUST 2016 (AS INCORPORATED IN ACI 318-14, CHAPTER 17), CURRENTLY ADOPTED AND APPLIED IN ACI 318-19 (REAPPROVED 2022). THE LIMIT STATE FAILURE MODE FOR THE ANCHOR PIN EMBEDMENT PARAMETERS, AS LISTED, IS BASED ON THE MINIMUM CHARACTERISTIC BOND STRESS VALUES. 2
7. INFINITY (POSTLESS) GLASS RAILING SYSTEM HAS BEEN LABORATORY TESTED IN CONFORMANCE WITH TAS 202-94 FOR STRUCTURAL TEST PRESSURE UP TO 240 PSF (POS. & NEG.) WITH 1 1/8" Ø ANCHOR PIN EMBEDDED WITH SIKADUR ® 32, HI-MOD, LPL EPOXY BONDING ADHESIVE AND IS APPROVED FOR DEIGN WIND PRESSURE EQUAL TO OR LESS THAN 130 PSF (POS. OR NEG.).
8. EPOXY OR GROUT ANCHORING PRODUCTS (OTHER THAN SIKADUR ® 32, HI-MOD, LPL EPOXY) SELECTED FOR EMBEDDING THE 1 1/8" Ø ANCHOR PIN INTO EXISTING CONCRETE SLAB MUST HAVE A CHARACTERISTIC BOND STRESS VALUE (I'uncr) DETERMINED BY PRODUCT TESTING, OR PUBLISHED ANCHOR PRODUCT MANUFACTURER'S TEST DATA, PERFORMED IN ACCORDANCE WITH LATEST EDITION OF ASTM E488 TESTING STANDARDS AND/OR ACI 355.4. THE CHARACTERISTIC BOND STRESS VALUE (I'uncr) LISTED IN THE SUMMARY CHART IS BASED ON UNCRACKED CONCRETE WITH ANCHOR PIN INSTALLED IN ROTARY HAMMER DRILLED HOLE WHICH IS CLEANED AND DRY AT TIME ANCHOR PIN IS SET.
9. DESIGN BENDING MOMENT ON GLASS RAILING SYSTEM IS GOVERNED BY CODE PRESCRIBED LIVE LOAD, 2023 FBC-B SECTION 1607.9.1.= 50 PLF, WITH REQUIRED SAFETY FACTOR OF 4 PER SECTION 2407.1.1, FOR GUARDRAILS INSTALLED WHERE DESIGN WIND PRESSURE ≤ 108.5 PSF. LATERAL SHEAR ON GLASS RAILING SYSTEM IS GOVERNED BY DESIGN WIND PRESSURE > 55 PSF. 2
10. INTERPOLATION BETWEEN DESIGNATED WIND DESIGN PRESSURES AND ANCHOR PIN EMBEDMENT PARAMETERS (Hef, Sp, F'c, AND I'unc) IS ALLOWED, FOR EDGE DISTANCE Ca1 ≥ 6 INCHES AT MINIMUM SLAB THICKNESS (Ha) DESIGNATED.
11. SITE SPECIFIC STRUCTURAL CALCULATIONS SHALL BE PERFORMED BY THE E.O.R., OR DELEGATED DESIGN PROFESSIONAL, TO DETERMINE ANCHOR PIN EMBEDMENT LENGTH AND ANCHOR PIN EDGE DISTANCE, FOR INSTALLATION OF THE INFINITY RAILING ANCHOR PIN SYSTEM INTO SLAB THICKNESS WITH CONCRETE COMPRESSIVE STRENGTHS, WHICH ARE NOT LISTED WITHIN THE ANCHORAGE SUMMARY CHARTS. 2

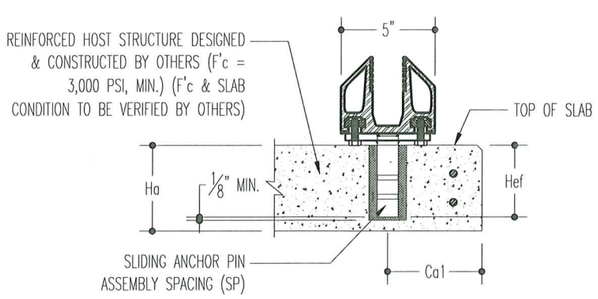

BOTTOM-BASE RAIL
1-1/8" DIA. ANCHOR PIN SETTING DIAGRAM

PRODUCT REVISED
as complying with the Florida Building Code
Acceptance No 24-1203.05
Expiration Date 04/26/2024
By
Miami Dade Product Control

TIMOTHY CHARLES BOUDAH
LICENSE
No. 63179
STATE OF FLORIDA
PROFESSIONAL ENGINEER

Date: 10-31-2024
Timothy C. Boudah, P.E.
State of Florida Registration No. 63179
514 S.W. PORT ST. LUCIE BLVD., PORT ST. LUCIE, FL. 34953
PHONE: (772)398-0342 FAX: (772)398-0342

Revisions

No.	Date	By	Description
2	10/31/2024	T.B.	UPDATE CODE REFERENCES TO 2023 FBC-B

PREMIER MANUFACTURER OF RAILINGS & ARCHITECTURAL METAL PRODUCTS

POMA ARCHITECTURAL METALS
www.pomametals.com
2049 S.W. POMA DR. PALM CITY, FL.34990
OFFICE: 772.283.0099 FAX: 772.283.7340

INFINITY
Postless Glass Railing® System
TESTED IN ACCORDANCE WITH MIAMI-DADE COUNTY PRODUCT CONTROL REQUIREMENTS

PRODUCT DESCRIPTION: INFINITY POSTLESS GRS
FABRICATOR: POMA ARCHITECTURAL METALS
ADDRESS: 2049 SW POMA DR. PALM CITY, FL
ENGINEER: TIMOTHY C. BOUDAH, P.E.
Sheet Size: 11X17

Product No.: IGRS 58-1
Drawn By: JP/TCB
Checked By: FP
Scale: NO SCALE
Date: FEB, 2018
Sheet No.: 14 of 16

BOTTOM-BASE RAIL ANCHORAGE SUMMARY CHART

T-BOLT ANCHOR SPACING Vs. CONCRETE SLAB & SETTING PARAMETERS

MAXIMUM DESIGN WIND PRESSURE (NEG. OR POS.) (Pw)	MINIMUM ANCHOR BOLT EMBEDMENT DEPTH (Hef)	MINIMUM ANCHOR BOLT EDGE DISTANCE (Ca1)	MAXIMUM T-BOLT SPACING (STAGGERED) (Sp)	MINIMUM CONCRETE SLAB COMPRESSIVE STRENGTH (F'c)	MINIMUM CHARACTERISTIC BOND STRESS (Γuncr)
120 PSF	3.0 INCH	4.25 INCH	7.75 INCH	3,000 PSI	1,845 PSI
			8.0	3,150	1,930
			8.50	3,500	2,083
			9.0	4,000	2,300
			9.75	4,500	2,480
			10.0	4,700	2,560
			10.25	5,000	2,640
			10.875	5,500	2,835
			11.0	5,540	2,875
			11.50	6,000	3,050
	3.5 INCH		8.75 INCH	3,000 PSI	1,735 PSI
			9.0	3,100	1,800
			9.50	3,500	1,930
			10.0	3,700	2,065
			10.25	4,000	2,130
			11.0	4,500	2,350
			11.75	5,000	2,530
			12.0	5,100	2,590
			12.25	5,500	2,660
			13.0	6,000	2,845
	4.0 INCH		10.0 INCH	3,000 PSI	1,710 PSI
			10.75	3,500	1,870
			11.0	3,550	1,925
			11.75	4,000	2,110
			12.0	4,100	2,150
			12.50	4,500	2,260
			13.0	4,725	2,370
			13.25	5,000	2,425
			14.0	5,500	2,585
			15.0	6,000	2,800
	4.5 INCH		11.0 INCH	3,000 PSI	1,625 PSI
			12.0	3,350	1,815
			12.25	3,500	1,865
			13.0	3,850	2,070
			13.25	4,000	2,125
			14.0	4,400	2,270
			14.25	4,500	2,245
			15.0	5,000	2,385
			16.0	5,500	2,670
			16.75	6,000	2,820

MAXIMUM DESIGN WIND PRESSURE (NEG. OR POS.) (Pw)	MINIMUM ANCHOR BOLT EMBEDMENT DEPTH (Hef)	MINIMUM ANCHOR BOLT EDGE DISTANCE (Ca1)	MAXIMUM T-BOLT SPACING (STAGGERED) (Sp)	MINIMUM CONCRETE SLAB COMPRESSIVE STRENGTH (F'c)	MINIMUM CHARACTERISTIC BOND STRESS (Γuncr)
115 PSF	3.0 INCH	4.0 INCH	7.75 INCH	3,000 PSI	1,830 PSI
			8.0	3,150	1,910
			8.50	3,500	2,060
			9.0	4,000	2,215
			9.75	4,500	2,450
			10.0	4,700	2,525
			10.25	5,000	2,610
			10.75	5,500	2,760
			11.0	5,600	2,835
			11.50	6,000	2,990
	3.5 INCH		8.75 INCH	3,000 PSI	1,720 PSI
			9.0	3,100	1,785
			9.5	3,500	1,920
			10.0	3,700	2,042
			10.25	4,000	2,110
			11.0	4,500	2,300
			11.75	5,000	2,490
			12.0	5,100	2,555
			12.25	5,500	2,615
			13.0	6,000	2,810
	4.0 Inch		10.0 INCH	3,000 PSI	1,690 PSI
			10.75	3,500	1,855
			11.0	3,550	1,915
			11.75	4,000	2,075
			12.0	4,100	2,150
			12.50	4,500	2,235
			13.0	4,725	2,360
			13.25	5,000	2,390
			14.0	5,500	2,580
			15.0	6,000	2,815
	4.5 INCH		11.25 INCH	3,000 PSI	1,745 PSI
			12.0	3,300	1,915
			12.25	3,500	1,950
			13.0	3,850	2,105
			13.25	4,000	2,150
			14.0	4,400	2,305
			14.25	4,500	2,355
			15.0	5,000	2,497
			16.0	5,500	2,710
			16.75	6,000	2,845

MAXIMUM DESIGN WIND PRESSURE (NEG. OR POS.) (Pw)	MINIMUM ANCHOR BOLT EMBEDMENT DEPTH (Hef)	MINIMUM ANCHOR BOLT EDGE DISTANCE (Ca1)	MAXIMUM T-BOLT SPACING (STAGGERED) (Sp)	MINIMUM CONCRETE SLAB COMPRESSIVE STRENGTH (F'c)	MINIMUM CHARACTERISTIC BOND STRESS (Γuncr)
≤ 110.98 PSF SEE CHART NOTE # 6	3.0 INCH	4.0 INCH	8.0 INCH	3,000 PSI	1,830 PSI
			8.75	3,500	2,055
			9.0	3,670	2,130
			9.25	4,000	2,204
			10.0	4,500	2,430
			10.50	5,000	2,580
			11.0	5,275	2,725
			11.25	5,500	2,800
			11.75	6,000	2,947
	3.5 INCH		9.0 INCH	3,000 PSI	1,712 PSI
			10.0	3,500	1,960
			10.75	4,000	2,147
			11.0	4,150	2,210
			11.50	4,500	2,331
			12.0	4,850	2,460
			12.25	5,000	2,515
			12.875	5,500	2,667
			13.0	5,550	2,699
			13.50	6,000	2,819
	4.0 INCH		10.25 INCH	3,000 PSI	1,673 PSI
			11.0	3,300	1,840
			11.25	3,500	1,890
			12.0	3,850	2,070
			12.25	4,000	2,125
			13.0	4,500	2,270
			13.75	5,000	2,425
			14.0	5,050	2,490
			14.75	5,500	2,650
			15.0	5,625	2,705
			15.50	6,000	2,807
	4.5 INCH		11.75 INCH	3,000 PSI	1,775 PSI
			12.0	3,100	1,830
			12.75	3,500	1,970
			13.0	3,575	2,025
			13.75	4,000	2,165
			14.0	4,100	2,220
			14.75	4,500	2,360
			15.0	4,550	2,415
			15.75	5,000	2,555
			16.0	5,100	2,640
			16.75	5,500	2,750
			17.0	5,600	2,800
			17.50	6,000	2,885

PRODUCT REVISED
as complying with the Florida
Building Code
Acceptance No 24-1203.05
Expiration Date 04/26/2028
By
Miami Dade Product Control

TIMOTHY CHARLES BOUDAH
LICENSE No. 63179
STATE OF FLORIDA
PROFESSIONAL ENGINEER
Timothy C. Boudah, P.E.
State of Florida Registration No. 63179
514 S.W. PORT ST. LUCIE BLVD., PORT ST. LUCIE, FL 34953
PHONE: (772)398-0342 FAX: (772)398-0342

Revisions			
No.	Date	By	Description

PREMIER MANUFACTURER OF RAILINGS & ARCHITECTURAL METAL PRODUCTS

POMA ARCHITECTURAL METALS
www.pomametals.com
2049 S.W. POMA DR. PALM CITY, FL 34990
OFFICE: 772.283.0099 FAX: 772.283.7540

INFINITY
Postless Glass Railing® System
TESTED IN ACCORDANCE WITH MIAMI-DADE COUNTY PRODUCT CONTROL REQUIREMENTS

PRODUCT DESCRIPTION: INFINITY POSTLESS GRS
FABRICATOR: POMA ARCHITECTURAL METALS
ADDRESS: 2049 SW POMA DR. PALM CITY, FL
ENGINEER: TIMOTHY C. BOUDAH, P.E.
Sheet Size: 11X17

Product No.: IGRS 58-1
Drawn By: JP/TCB
Checked By: FP
Scale: NO SCALE
Date: FEB, 2018
Sheet No.: 15 of 16

BOTTOM-BASE RAIL ANCHORAGE SUMMARY CHART

T-BOLT ANCHOR SPACING Vs. CONCRETE SLAB & SETTING PARAMETERS

MAXIMUM DESIGN WIND PRESSURE (NEG. OR POS.) (Pw)	MINIMUM ANCHOR BOLT EMBEDMENT DEPTH (Hef)	MINIMUM ANCHOR BOLT EDGE DISTANCE (Ca1)	MAXIMUM T-BOLT SPACING (STAGGERED) (Sp)	MINIMUM CONCRETE SLAB COMPRESSIVE STRENGTH (F'c)	MINIMUM CHARACTERISTIC BOND STRESS (τuncr)
≤ 110.98 PSF SEE CHART NOTE # 6	3.0 INCH	3.5 INCH	7.25 INCH	3,000 PSI	1,795 PSI
			7.75	3,500	1,950
			8.0	3,600	2,030
			8.50	4,000	2,185
			9.0	4,500	2,345
			9.50	5,000	2,500
			10.0	5,500	2,660
			10.50	6,000	2,820
	3.5 INCH		8.25 INCH	3,000 PSI	1,710 PSI
			9.0	3,500	1,920
			9.75	4,000	2,125
			10.0	4,150	2,190
			10.25	4,500	2,245
			11.0	5,000	2,475
			11.50	5,500	2,580
			12.0	5,725	2,730
			12.25	6,000	2,790
	4.0 INCH		9.50 INCH	3,000 PSI	1,800 PSI
			10.0	3,250	1,925
			10.25	3,500	1,975
			11.0	4,000	2,170
			12.0	4,500	2,410
			12.75	5,000	2,590
			13.0	5,200	2,650
			13.25	5,500	2,695
			14.0	6,000	2,880
	4.5 INCH		10.0 INCH	3,000 PSI	1,685 PSI
			11.0	3,100	1,960
			11.75	3,500	2,120
			12.0	3,600	2,180
			12.50	4,000	2,275
			13.0	4,150	2,420
			13.50	4,500	2,505
			14.0	4,725	2,650
			14.50	5,000	2,735
			15.0	5,275	2,850
			15.25	5,500	2,900
			16.0	6,000	3,075

MAXIMUM DESIGN WIND PRESSURE (NEG. OR POS.) (Pw)	MINIMUM ANCHOR BOLT EMBEDMENT DEPTH (Hef)	MINIMUM ANCHOR BOLT EDGE DISTANCE (Ca1)	MAXIMUM T-BOLT SPACING (STAGGERED) (Sp)	MINIMUM CONCRETE SLAB COMPRESSIVE STRENGTH (F'c)	MINIMUM CHARACTERISTIC BOND STRESS (τuncr)
≤ 110.98 PSF SEE CHART NOTE # 6	3.0 INCH	3.25 INCH	6.75 INCH	3,000 PSI	1,730 PSI
			7.0	3,100	1,815
			7.25	3,500	1,890
			8.0	4,000	2,135
			8.50	4,500	2,295
			9.0	5,000	2,460
			9.50	5,500	2,615
			10.0	6,000	2,775
	3.5 INCH		7.75 INCH	3,000 PSI	1,720 PSI
			8.0	3,050	1,795
			8.50	3,500	1,930
			9.0	3,750	2,085
			9.25	4,000	2,150
			9.75	4,500	2,290
			10.0	4,550	2,370
			10.50	5,000	2,505
			11.0	5,500	2,645
			11.50	6,000	2,780
	4.0 INCH		9.25 INCH	3,000 PSI	1,920 PSI
			9.75	3,500	2,030
			10.0	3,550	2,125
			10.50	4,000	2,220
			11.0	4,200	2,370
			11.25	4,500	2,415
			12.0	5,000	2,610
			12.75	5,500	2,810
			13.0	5,650	2,880
			13.50	6,000	3,010
	4.5 INCH		10.25 INCH	3,000 PSI	1,975 PSI
			11.0	3,350	2,170
			11.25	3,500	2,220
			12.0	4,000	2,390
			13.0	4,500	2,645
			13.75	5,000	2,815
			14.0	5,100	2,885
			14.50	5,500	2,990
			15.0	5,700	3,150
			15.50	6,000	3,250

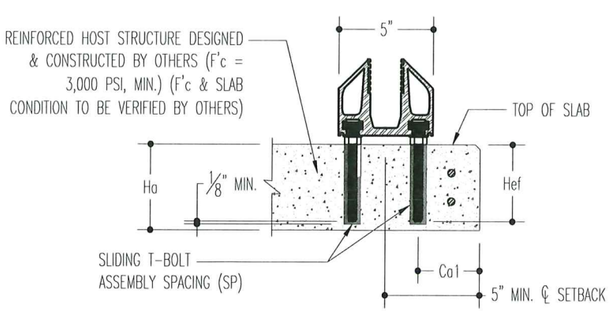

BOTTOM-BASE RAIL
T-BOLT ANCHOR SETTING DIAGRAM

INFINITY T-BOLT ANCHOR ASSEMBLY BOTTOM-BASE RAIL ANCHORAGE SUMMARY CHART NOTES:

1. T-BOLT ANCHOR SPACING LISTED REFLECT THE STAGGERED BOLT SPACING DIMENSION (Sp). ALTERNATIVE BOLT SPACING MAY BE USED, WHEN CALCULATIONS ARE CONDUCTED TO DETERMINE CONCRETE SLAB PARAMETERS, F'c, Hef, AND Ca1.
2. CONCRETE SLAB THICKNESS (Ha) MUST NOT BE LESS THAN THE 1 1/2" + Hef, AS FOLLOWING:

Hef	Ha
3.0 Inch	4.5 Inches (MIN.)
3.5	5.0
4.0	5.5
4.5	6.0

3. T-BOLT ALL-THREAD-ROD (ATR) SHALL CONSIST OF A.I.S.I. TYPE 304 STAINLESS STEEL, CONFORMING TO ASTM F593 CW THAT PROVIDE ULTIMATE TENSILE STRENGTH =/> 100 KSI, WITH MINIMUM YIELD STRENGTH = 55 KSI., OR EQUAL.
4. T-BOLT (ATR) HOLE DEPTH MUST BE DRILLED NO LESS THAN 1/4" DEEPER THAN SPECIFIED BOLT EMBEDMENT DEPTH, Hef.
5. THE T-BOLT ANCHOR SPACING SUMMARY CHART MAY BE USED WITH ANY NON-CORROSIVE EPOXY OR GROUT, RECOGNIZED AS AN ANCHORING ADHESIVE FOR THREADED STEEL ANCHOR RODS, WHICH HAS A CHARACTERISTIC BOND STRESS VALUE (τuncr), DETERMINED BY PRODUCT TESTING IN CONFORMANCE WITH ICC-ES AC308, OR ANCHOR ADHESIVE MANUFACTURER'S PRODUCT TEST DATA, PERFORMED IN ACCORDANCE WITH LATEST EDITION OF ASTM E488 TESTING STANDARDS AND/OR ACI 355.4, FOR UNCRACKED CONCRETE, INSTALLED IN TEMPERATURE CATEGORY 'A', DRY CONDITION.
6. DESIGN BENDING MOMENT ON GLASS RAILING SYSTEM IS GOVERNED BY CODE PRESCRIBED LIVE LOAD, 2023 FBC-B, SECTION 1607.9.1.= 50 PLF, WITH REQUIRED SAFETY FACTOR OF 4 PER SECTION 2407.1.1, FOR GUARDRAILS INSTALLED WHERE DESIGN WIND PRESSURE ≤ 110.98 PSF. LATERAL SHEAR ON GLASS RAILING SYSTEM IS GOVERNED BY DESIGN WIND PRESSURE > 55.6 PSF.
7. INTERPOLATION BETWEEN DESIGNATED WIND DESIGN PRESSURES, THE T-BOLT ANCHOR SPACING, AND CHARACTERISTIC BOND STRESS IS ALLOWED FOR THE T-BOLT ANCHOR BOLT EDGE DISTANCE (Ca1) LISTED, OR GREATER.

PRODUCT REVISED
as complying with the Florida
Building Code
Acceptance No 24-1203.05
Expiration Date 04/26/2028
By
Miami Dade Product Control

TIMOTHY CHARLES BOUDAH
LICENSE
ENGINEER
No. 63179
STATE OF
FLORIDA
PROFESSIONAL ENGINEER

Date: 10-31-2024
Timothy C. Boudah, P.E.
State of Florida Registration No. 63179
514 S.W. PORT ST. LUCIE BLVD., PORT ST. LUCIE, FL 34953
PHONE: (772)398-0342 FAX: (772)398-0342

Revisions

No.	Date	By	Description
2	10/31/2024	T.B.	UPDATE CODE REFERENCES TO 2023 FBC-B

PREMIER MANUFACTURER OF RAILINGS & ARCHITECTURAL METAL PRODUCTS

POMA ARCHITECTURAL METALS
www.pomametals.com
2049 S.W. POMA DR. PALM CITY, FL 34990
OFFICE: 772.283.0099 FAX: 772.283.7340

INFINITY
Postless Glass Railing® System
TESTED IN ACCORDANCE WITH MIAMI-DADE COUNTY PRODUCT CONTROL REQUIREMENTS

PRODUCT DESCRIPTION: INFINITY POSTLESS GRS
FABRICATOR: POMA ARCHITECTURAL METALS
ADDRESS: 2049 SW POMA DR. PALM CITY, FL
ENGINEER: TIMOTHY C. BOUDAH, P.E.
Sheet Size: 11X17

Product No.: IGRS 58-1
Drawn By: JP/TCB
Checked By: FP
Scale: NO SCALE
Date: FEB, 2018
Sheet No.: 16 of 16